Standards Manual

2020

City of Winchester, VA
Public Services Department
Standards Manual
Table of Contents

I. Plan Preparation Standards I-1
A. General I-1
B. Scale I-1
C. Orientation I-2
D. Plan and Profile Drawings: Sanitary Sewers, Waterlines, Storm Sewers I-2
E. Detail Sheets I-3
F. Pump Station Drawings I-3

II. Water Distribution Systems II-1
A. General II-1
B. Engineer's Report II-2
C. Flow Requirements II-2
1. Residential II-2
2. Non-Residential II-2
D. Fire Flow II-3
E. System Design II-3
1. General II-3
2. Location II-5
3. Size II-5
4. Valve II-6
5. Air Release II-6
6. Road, Railroad, or Stream Crossings II-6
7. Fire Protection Requirements II-6
8. Cross Connection Control II-6
F. Installation II-7
1. General II-7
2. Depth II-7
3. Bedding and Backfill II-7
G. Material II-7
1. General II-7
2. Water Mains II-7
3. Pipe Fittings II-8
4. Valves II-8
5. Tapping Sleeves and Valves II-10
6. Fire Hydrants II-10
7. Water Services II-10
H. Cleaning, Testing and Disinfection II-12
1. General II-12
2. Pressure and Leakage Test II-12
3. Disinfection II-13

III. Sanitary Sewer Collection Systems III-1
A. General III-1
B. Engineer's Report III-1
C. Flow Requirements III-2
1. Residential III-2
2. Non-Residential III-2
3. Peak Flow- Lateral and Sub-main Sewers III-2

4. Peak Flow- Main, Trunk, and Interceptor Sewers III-2
D. System Design III-2
1. General III-2
2. Location III-2
3. Size III-4
4. Bedding and Backfill III-4
5. Depth III-5
6. Pipe Slope III-5
7. Manholes III-6
8. Road, Railroad, and Stream Crossings III-6
9. Sewage Pump Stations and Force Mains III-6
E. Materials III-7
1. General III-7
2. Gravity Mains III-7
3. Force Mains III-7
4. Lateral Piping III-7
5. Pipe Fittings III-8
6. Valves- Force Main System III-8
7. Manholes III-9
8. Manhole Frame and Cover III-9
F. Inspection and Testing III-9
1. General III-9
2. Gravity Sewer Lines III-10
3. Manholes- Vacuum Method III-11
4. Force Mains- Exfiltration Method III-11
5. Force Mains- Air Testing III-11
6. Pump Station Wet Wells III-12

IV. Stormwater Collection Systems IV-1
A. General IV-1
B. Stormwater Report IV-1
C. Stormwater Design IV-1
1. General IV-1
2. Storm Sewer Systems IV-1
3. Storm Inlet Design IV-4
4. Stormwater Conveyance Channels IV-4
5. Stormwater Quantity and Quality IV-5
D. Materials IV-5
1. Concrete Pipe IV-5
2. Corrugated Plastic Pipe IV-5
3. Drop Inlets IV-5
4. Manholes IV-5
E. Inspection and Testing IV-6
1. Concrete Pipe IV-6
2. Corrugated Plastic Pipe IV-6

V. Cast-in-Place Concrete V-1
A. General V-1
B. System Design V-1
1. Sidewalks V-1
2. Curb and Gutter V-1
C. Material V-1

1. Sub-base Material V-1
2. Concrete V-1
3. Joint Filler V-1
4. Concrete Sealer V-1
5. Rubber V-1
6. Pavers V-1
7. Bricks V-2
D. Installation V-2
1. Sidewalk and Entrance V-2
2. Curb and Gutters V-3
3. Construction of Forms V-4
4. Preparation for Placing V-4
5. Delivery V-4
6. Placing Concrete V-4
7. Removal of Forms V-5
8. Protection of New Work V-5
9. Performed Joints V-5
10. Finishing V-5
11. Curing V-5
12. Sealing V-5
13. Defective Concrete V-5

VI. Sign Installation VI-1
A. Sign Post and Anchor VI-1
B. Street Name Signs VI-1
C. Stop Signs VI-2
D. Other Signs VI-2

VII. Marking Specification VII-1
A. Material VII-1
B. Arrows VII-1
C. Crosswalks VII-1
D. Stop Bars VII-2
E. Paint VII-2

VIII. Miscellaneous VIII-1
A. Micro-trenching VIII-1

IX. As-built Drawings IX-1
A. General IX-1
B. Drawing Preparation Guidelines IX-2
C. Drawing Submittal Guidelines IX-2
D. Digital Drawing Submittal Guidelines IX-2
E. Water As-built Drawing Requirements IX-2
F. Sanitary Sewer As-built Drawing Requirements IX-2
G. Storm System As-built Drawing Requirements IX-3

X. Project Acceptance of Work X-1
A. Public Improvements X-1
1. Substantial Completion X-1
2. Final Acceptance X-1
3. Warranty X-1

B. Additional Conditions X-2
1. Issuance of Land Disturbance Permit X-2
2. Release of Water Meters X-2
3. Issuance of Certificate of Occupancy X-3

XI. Appendix XI-1
A. Hydrant Testing Procedure A-1
1. Fire Hydrant Testing Instructions A-2
2. Fire Hydrant Testing Data Sheet A-3
B. Digital Drawing Control Points B-1
C. SWBMP Maintenance Agreement C-1
D. Facility Inspection Checklist D-1
E. As-built Drawings Checklist E-1

XII. Standard Details

Water Details
Typical Residential Water Service - 5/8"x3/4" WD-1
Typical Residential Water Service - Twin Setting 5/8"x3/4" WD-2
Typical 1-inch Water Service WD-3
1-1/2" & 2" Meter Installation WD-4
Typical Compound Meter Service Installation and Vault Detail WD-5
Fire Line Service Installation WD-6
Fire Hydrant Installation WD-7
Typical Valve and Box Installation WD-8
Ductile Iron Pipe Restraint WD-9
Concrete Thrust Blocking WD-10
Dead End Anchor WD-11

Sanitary Sewer Details
Standard Precast Concrete Manhole – Sewer 8”- 24” SS-1
Inside Drop Connection for Sanitary Mains 8”- 12” ..... SS-2a, b
Outside Drop Connection for Sanitary Mains 15” and Larger SS-3
Standard Sanitary Lateral Connection SS-4
Standard Sanitary Lateral Connection SS-5
Sanitary Lateral Vertical Connection for Depth Greater Than 15 FT SS-6
28-inch Sanitary Manhole Lid and Frame SS-7
Manhole Adjustment Detail SS-8

Water and Sanitary Sewer Details
Standard Bedding Detail outside Traffic Areas WS-1
Standard Bedding Detail within Traffic Areas WS-2

Stormwater Details
Concrete Storm Drain Bedding Within Traffic Areas SD-1
Storm Drain Bedding Outside Traffic Areas (RCP) SD-2a
Storm Drain Bedding Outside Traffic Areas (Corrugated HDPE) SD-2b
28” Storm Manhole Lid and Frame SD-3
DI-3A, -3B, -3C (Shallow) ..... SD-4a, b, c
Modified DI-1 (Shallow) SD-5
22” DI-3 Lid and Frame SD-6

Sidewalk Details

Standard Concrete Sidewalk SW-1
Historic District Sidewalk Six-Foot Wide and Above SW-2
Historic District Sidewalk Less Than Six-Foot Wide SW-3
All Brick Sidewalk SW-4
Bollard Type III SW-5

Miscellaneous Details

Parking Meter Post MS-1
Micro-trenching MS-2

I. Plan Preparation Standards

A. General

1. All projects shall have a title sheet that will include:
   a. A site location map detailing the project.
   b. An index to drawings.
   c. Name, address and telephone number of developer.
2. The design of all utility systems and extensions or modifications thereto shall be performed under the direction of a registered professional engineer with a current registration in the Commonwealth of Virginia in accordance with Title 54.1, Chapter 3 of the Code of Virginia, 1950, as amended. Where applicable, design may be performed under the direction of a certified land surveyor in accordance with Sec. 54.1-408 of the above-cited code.
3. All plan and profile sheets are to be certified by a professional engineer or land surveyor registered in the Commonwealth of Virginia, as applicable and dated.
4. Elevations are to be USGS datum (NAVD 88).
5. All sheets are to be numbered, with the total number of sheets included. For example, Sheet 4 of 12.
6. An overall utility layout sheet shall be included and shall show streets, lots, sanitary, storm, and water line locations. Include any phasing of the development.
7. All existing and proposed storm sewer lines, gas, telephone, power and other utility lines, which cross or run parallel to the sewer or water lines, shall be shown with exact horizontal and vertical separations given, where applicable.
8. Profiles of water, sanitary and storm sewer lines are required.
9. A bench mark is required on the site plan.
10. Detail Sheet(s)/Specification Sheet(s) shall be included.
11. Plan submittal sheets shall be 24-inch x 36-inch.
12. Standard topographical, utility and boundary line symbols shall be used in the preparation of plans.

B. Scale

The following scales for drawings are required, though certain circumstances may dictate the use of larger or smaller scales:

1. Storm sewer, sanitary sewer, waterline and street plan and profile:
   1" = 50' horizontal, 1" = 5' vertical
2. Drainage project cross sections:
   1" = 5' or 1" = 10' horizontal and vertical
3. Overall development plans, site plans , drainage studies:
   1" = 20', 30', 40' or 50'
4. Details:
   Not less than 3/8" = 1'-0"
5. Pump Stations
   1/2" = 1'-0"

C. Orientation
Whenever possible, drawings should be situated so that north is either toward the top or toward the left side of the sheet. When stationing is required, the stationing should run from South to North and from West to East. North will be to the right when the stationing runs from the South to the North.

D. Plan and Profile Drawings: Sanitary Sewers, Waterlines, Storm Sewers
The upper half of the drawing shall show the utility line in plan, and the lower half shall show the utility line in profile along with the existing and proposed final ground surface. Plan and profile views shall have line designations, station numbers, and other indexing necessary to easily correlate the plan and profile views.

1. All plan views shall include the following information when applicable:
   a. North Arrow.
   b. Scales used.
   c. Project name and number, sheet number, date drawn, date and nature of revisions.
   d. Legend of sanitary sewer and water lines, other utilities and structures.
   e. Stationing along the centerline at 100-foot increments.
   f. All topography in the area affected by construction.
   g. In order to provide gravity service at the elevation of connection, the plans shall indicate the following information:
      i. The elevation and location of any existing structures to be served by a water and/or sewer connection shall be clearly shown.
      ii. All minimum finished floor elevations and basement elevations are to be shown on plans.
      iii. Ground level at building line on unoccupied structure.
   h. Right-of-way lines, property lines (with bearing and distance) and easements, both existing and proposed.
   i. Address and lot number on each lot.
   j. Locations of all existing or proposed utilities within 20 feet of project or that may otherwise conflict with the proposed sewer or water installation. This requirement applies to existing/proposed utilities such as natural gas, telephone, electric, cable TV.
   k. Natural or manmade features that may conflict with construction or installation.
   l. Flow arrows showing direction of flow.
   m. Pipe with size and material to be installed.
   n. Show and locate all appurtenances (bends, tees, crosses, valves, hydrants, manholes, services, etc.).
   o. All road, rail or paving crossings should indicate "open cut" if allowed; if not, show length, depth, and size of pipe or casing to be bored or jacked.
   p. Match line with station for continued sheets.
2. All profile views shall include the following information when applicable:
   a. Scales used.
   b. Existing and final grade lines.
   c. Sewer profiles shall indicate the invert of each pipe in each manhole, the calculated slope in percent of each line section, the final frame and lid

elevation of each manhole, and the type of frame and lid if other than standard.

d. Length of pipe.
e. Pipe with size and material to be installed.
f. Crossings of other utilities, existing or proposed. Note the minimum vertical separation required.
g. Stream or water crossings with stream bed elevation and normal and extreme water levels.
h. Water plans shall clearly indicate the intended depth of cover at least twice on each sheet.
i. Fitting locations and configurations, including valves, bends, tees, etc.
j. Stationing along the centerline at 100-foot increments.

E. Detail Sheets

Detail should be provided for all special joints, thrust blocks or restrained joints, cross sections, or appurtenances such as manholes, service connections, elevated piping, pipe bedding, special highway, stream or railroad crossings, or whenever it is necessary for clarity of work or construction.

F. Pump Station Drawing

Pump station plans shall, in general, contain the following:

1. At least two views of the station - plan view and cross-section.
2. Electrical panel detail.
3. Pump and alarm control elevations.
4. Finished grade and foundation elevations.
5. Design pump capacity, horsepower, total dynamic head, manufacturer and model number.
6. Sump capacity and cycle time.
7. The Engineer shall submit a copy of the head discharge curve and the complete design calculations for the pump station and force main.

II. Water Distribution Systems

A. General

1. The following minimum requirements are considered acceptable to the City of Winchester in the distribution of water for domestic consumption. Deviation from these may be allowed if in accordance with sound engineering standards, and if the deviation will not increase the likelihood of a system failure or impact the level of service provided to existing customers on the City of Winchester distribution system.
2. As a general guideline, standards shall be those set forth in Waterworks Regulations, Virginia Department of Health, Title 12, Agency 5, Chapter 590 of the Virginia Administrative Code (VAC).
3. When the City of Winchester standards differ from state and/or federal requirements, the most stringent requirement shall apply.
4. All drawings, specifications, and engineer's reports submitted for approval shall be prepared by or under the supervision of a registered Professional Engineer with a current registration in the Commonwealth of Virginia in accordance with Title 54.1, Chapter 3 of the Code of Virginia, 1950, as amended. Where applicable, design may be performed under the direction of a certified Land Surveyor B in accordance with Sec. 54.1-408 of the above-cited code. The front cover of each set of drawings, of each copy of the engineer's report, and of each copy of the specifications submitted for review shall bear the signed imprint of the seal of the above licensed professional who prepared or supervised the preparation, and shall be signed with an original signature and date.
5. The engineer shall be responsible for obtaining the review and necessary approvals of all drawings and specifications by applicable City, County, State and Federal agencies having jurisdiction. Copies of such approvals shall be submitted to the Winchester Department of Public Services at the time of final approval.
6. The developer is required to design and construct his/her system, properly sized and at an appropriate location, to permit future extensions to be made at the limits of the subdivision or development in question.
7. Water and fire protection distribution facilities are to be provided solely for the purpose of supplying potable water and fire protection. Under no circumstances shall cross connections be allowed to unapproved water facilities.
8. Any Contractor that will perform water main taps, work within water main easements or make road cuts for the purpose of working on the water main, must have Class A, Contractor's license. The Contractor must have 3 years of water experience, which may be requested by the City prior to allowing work to commence.
9. A shutout on any City distribution main must be performed between the hours of 12 midnight and 6 AM. The Contractor must notify the City at least 5 working days in advance of an anticipated shutout. The Contractor must notify all customers affected by a shutout in writing at least 48 hours in advance. The notification must give the date, time, anticipated length customer may be without water and a brief reason for the shutout. A copy of the notice must be given to the City inspector.

10. The use of wells for domestic water service within the City of Winchester is prohibited. Wells cannot be connected to plumbing or the City's system in any way. Well water can be used for irrigation purposes only.

B. Engineer's Report
   1. Requests for extensions of waterlines shall be accompanied by an engineer's report, which shall present the following information as applicable:
      a. A description of the nature and extent of the area to be served. Waterlines are to be designed to serve the entire service area of which the subdivision or development is a part.
      b. An appraisal of the future requirements for service, including existing and potential connections, provisions for extending the system to include additional area. The engineer should take into consideration flow rates that may be derived for different zoning and land use classification that exists or could exist in the area of development.
      c. Present and estimated future water consumption values should be used as the basis of design.
      d. Alternate plans - Where two or more solutions exist for providing public water supply facilities, and each is feasible and practicable, the report shall discuss the alternate plans and give reasons for selecting the one recommended.
      e. Hydrant tests shall be provided for all main extensions according to the City's hydrant testing procedure, found in Appendix A.
      f. Water modeling shall be required when mains are not looped, when the fire flow test(s) indicate an insufficient "available flow", and for all proposed waterline extensions to serve residential subdivisions, or at the request of the Winchester Department of Public Services.

C. Flow Requirements
   1. Residential
      a. Residential uses include single family units or townhouses with individual 5/8-inch by ¾-inch or 1 inch meters.
      b. System shall be designed to maintain a minimum pressure of 20 psi in the distribution system at the design flow (the peak hour flow plus the applicable fire flows).
      c. Peak hour flow for a residential service shall be a minimum of three gallons per minute.
      d. The proposed water system shall provide a minimum fire flow of 1,000 gallons per minute at each proposed hydrant location. No pumping station shall be used to meet fire flows unless the City of Winchester provides written approval.
   2. Nonresidential
      a. System shall be designed to maintain a minimum pressure of 20 psi in the distribution system at the design flow (maximum anticipated flow plus the applicable fire flows).
      b. The required flow for commercial, industrial or other nonresidential uses shall be as determined by the design engineer and reviewed and approved by the City of Winchester.

c. Required fire flows for areas other than residential shall be a minimum of 1,000 gallons per minute at a residual pressure of 20 psi. No pumping station shall be used to meet fire flows unless the City of Winchester provides written approval.

D. Fire Flow Test
1. A fire flow test may be required for all water connections made to the City of Winchester water distribution system that serves more than one single residential structure. The fire flow will determine the adequacy of the existing water system to provide a sufficient supply of water.
2. The fire flow test shall consist of two components:
   a. Fire hydrant flow test. The maximum obtainable fire flow and the residual pressure at such flow shall be determined.
   b. Calculation of "available flow" at 20 psi residual pressure.
3. The hydrant testing procedure and form can be found in Appendix A.

E. System Design
1. General
   a. The distribution system developed shall be compatible with the City of Winchester's latest Water Supply Study.
   b. Dead-end lines should be minimized by the looping of all mains. Where dead ends occur, they shall not exceed 1,000 feet and shall be provided with a fire hydrant for flushing purposes.
   c. The plans shall provide for future connecting mains by extending construction of all water mains to the exterior boundaries of the development.
   d. Provisions shall be made to extend the termination point of future connections outside the pavement area.
   e. A waterline that may be extended shall have a gate valve at the end. There shall be one full joint of pipe on each side of the valve.
   f. The manufacturer's allowable pipe deflection shall be used to maintain the vertical and horizontal route unless other fittings (i.e. tees and elbows) or methods are specifically called out or are directed by the City.
   g. Tees shall be cut in when the new main is to be larger than or of equal size to the existing main, or when a new valve is to be installed on the existing main near the location of the new tee.
   h. No 90 degree bends in the distribution system shall be permitted.
2. Location
   a. All water mains shall be located to provide service to each lot within a subdivision and to form a looped network.
   b. All mains shall be installed in dedicated roadways, public rights-of-way, or utility easements dedicated to the City of Winchester. Water lines to be installed in streets shall generally be located 2 feet off the edge of pavement (pavement side) where there is no curb, and 4 feet in front of the face of the curb (pavement side) where there is curb.
   c. All water meter boxes shall be located between the curb and sidewalk where space permits. In other cases, the meter boxes shall be located within 2 feet of the back of sidewalk (property side). In areas of new service, copper service piping shall be extended from the box to the

property line. In areas of existing service, the existing service line shall be connected to the meter.

d. Easements
   1) An "easement" shall mean any area to which the City has unlimited access for servicing utility lines.
   2) Permanent easements shall be a minimum width of 20 feet. Wider easements may be required where more than one facility may occupy an easement, or in consideration of line size, depth or access requirements.
   3) Off-site easements shall be recorded and the Instrument Numbers of the recordation shown on the utilities plan before acceptance of the utilities into the City's system.
   4) No building or other structure, including but not limited to fences and decks, shall be erected over permanent easements.
   5) Any plantings installed within an easement may be damaged or destroyed during the course of servicing. The City is not liable for damage to any improvements or plantings within an easement. The City will reseed as necessary any bare or disturbed soil for erosion control purposes.
   6) Small and medium shrubs, groundcovers, or grasses may be planted within an easement. Small trees (under 30 feet in height at maturity) may be planted a minimum of 10 feet from the centerline of the closest pipeline within the easement or 10 feet from the center of the easement, whichever is greater. Small trees as defined above shall include redbuds, fringe tree, serviceberry, crape myrtle, golden raintree, hawthorne, hornbeam, saucer or star magnolia, sassafras, or smoke tree. Large trees shall not be placed within any City Utility easement.

e. Separation of water mains and sewers (both sanitary and storm)
   1) Parallel installation. <u>Under normal conditions</u> water mains shall be laid at least 10 feet horizontally from a sewer or sewer manhole. The distance shall be measured edge to edge.
   2) Parallel installation. <u>Under unusual conditions</u> when local conditions prevent a horizontal separation of 10 feet, the water main may be laid closer to a sewer or sewer manhole provided that:
      a) The bottom of the water main shall be at least 18 inches above the top (crown) of the sewer.
      b) Where this vertical separation cannot be obtained, the sewer shall be constructed of Class 52, ductile iron in accordance with the standards for ductile iron sewer pipe, and pressure tested in place without leakage prior to backfilling.
      c) The sewer manhole shall be of watertight construction and tested in place.
   3) Crossing. Under normal conditions, water lines crossing sewers shall be laid to provide a separation of at least 18 inches between the bottom of the water line and the top of the sewer whenever possible. Under unusual conditions when local conditions prevent a vertical separation of 18 inches, the following construction shall be used:

a) Sewers passing over or under water mains shall be constructed of Class 52, ductile iron sewer pipe according to the standards for ductile iron gravity mains.
b) Adequate structural support shall be provided for the mains to prevent excessive deflection and settling. Support may be provided by a concrete cradle sized appropriately for the sizes of the mains and the surrounding soil conditions.
c) A full length of the water main pipe section shall be centered at the point of crossing so that the joints shall be equidistant and as far as possible from the sewer.

4) Crossing. Water mains passing under sewers shall be protected by providing:
   a) A vertical separation of at least 18 inches between the bottom of the sewer and the top of the water main.
   b) A full length of the water main pipe section shall be centered at the point of crossing so that the joints shall be equidistant and as far as possible from the sewer.
   c) Adequate support and protection shall be provided for the sewer main during trenching operations.
5) Crossing. All crossings shall be as close to perpendicular as possible.
6) No water main shall pass through or come in contact with any part of a sewer manhole.

3. Size
   a. The minimum diameter for water distribution mains shall be 8 inches in all areas.
   b. Standard diameter of piping shall be used with nominal diameters of 8-inch, 10-inch, 12-inch, 16-inch, 20-inch, and 24-inch.
   c. All mains shall be interconnected to form a grid system. Interconnections between 8-inch mains shall not be more than 1,000 feet apart unless authorized in writing by the City of Winchester. Where greater separation of interconnecting mains is necessary, larger diameter mains shall be used.
   d. Primary grids shall be 10-inch diameter or larger pipe and shall be sufficient size to furnish required flow, pressures and velocities.
   e. Velocities of water for the non-fire flow condition in the distribution mains shall not exceed 6 feet per second.
4. Valves
   a. On distribution mains up to 16 inches in diameter, a sufficient number of valves shall be installed so that no single case of accident, breakage, or repair to the water system will cause the shutdown of a length of pipe greater than 1,000 feet.
   b. Valves on distribution mains larger than 16 inches shall be at intervals providing for sound design and isolation of system segments for maintenance and repair.
   c. Valves shall be located on all branches of a network.
   d. Valves shall be located on all fire lines at its connection to the main or the transition point from a larger diameter line.

5. Air Release
   a. Hydrants may be used for air release on water mains 12 inches and smaller.
   b. Air release valves shall be provided on mains greater than 12 inches. Valves shall be installed within chambers or pits. The open end of an air release pipe shall be extended from the chamber to a point at least one foot above ground and provided with a screened, downward facing elbow.
6. Road, Railroad or Stream Crossings
   a. Major road crossings and railroad crossings shall be encased in steel casing. Additional requirements of the regulatory agency responsible for the roadway/railway shall be met.
   b. Major stream crossings (where width of 100-year surface elevations exceeds 99 feet) shall be encased in steel casing. Valves shall be provided at both ends of the water crossing; the valves shall be easily accessible and not subject to flooding.
7. Fire Protection Requirements
   a. Fire hydrants serving residential single family developments shall have a maximum spacing between hydrants of 1,000 feet. Each dwelling unit must be within 500 feet of a hydrant installation.
   b. For commercial or multi-family development, fire hydrants shall have a maximum spacing of 600 feet between hydrants and all portions of each structure shall be within 300 feet of a hydrant.
   c. Distances between fire hydrants shall be measured along the centerline of roadway surface or fire lane.
   d. For buildings with a fire suppression system, a fire hydrant must be located within 100 feet of the siamese connection to the fire suppression system. In addition, all industrial buildings must have a fire hydrant within 300 feet of all portions of the structure.
   e. Hydrants shall be located a minimum of 40 feet away from structures.
   f. A valve shall be installed between all hydrants and the main.
8. Cross Connection Control
   a. All water meters shall be equipped with a backflow preventer. The backflow preventer on meter setters shall be an integral dual check valve.
   b. Non-residential backflow preventers shall be either a double check assembly or a reduced pressure zone backflow preventer, depending upon whether the connection is considered to be a high hazard service as determined by the Department of Public Services. Detector type, double check assemblies shall be required on privately owned and maintained fire lines where processed water or fluids are not involved. On fire suppression systems where chemicals are added by the user on site to prevent freezing, pipe corrosion, etc., backflow prevention shall be provided by using an approved reduced pressure zone (RPZ), detector type preventer.
   c. Non-residential and irrigation backflow preventers shall be installed outside of the City's right-of way or easement in a separate enclosure. The maintenance, testing and repair of such backflow preventers shall be the responsibility of the customer. These units shall be tested annually by an authorized technician, and the test results shall be

submitted to the Department of Public Services. Failure to test and/or maintain non-residential and irrigation backflow preventers may result in termination of water service.

F. Installation
   1. General
      a. Unless otherwise specified, ductile iron water mains shall be installed according to the requirements of AWWA C600.
   2. Depth
      a. All lines shall be laid with a minimum cover of 36 inches from the top of pipe to finished ground surface grade. Water main cover shall not exceed 11 feet without City approval.
   3. Bedding and Backfill
      a. Outside of Traffic Area (see Detail WS-1)
         1) The water main pipe, fittings and appurtenances shall be bedded by hand, or approved mechanical method, from 6 inches below the pipe to 12 inches above the pipe with crushed stone classified as VDOT No. 57. Bedding material shall be deposited in the trench for its full width of each side of the pipe, fitting or appurtenance.
         2) From 12 inches above the pipe to the final grade, excavated trench material containing stones no greater than 3 inches in diameter may be used as backfill material, unless otherwise specified.
      b. Within Traffic Area (See Detail WS-2)
         1) The water main pipe, fittings and appurtenances shall be bedded by hand, or approved mechanical method, from 6 inches below the pipe to 12 inches above the pipe with crushed stone classified as VDOT No. 57. Bedding material shall be deposited in the trench for its full width of each side of the pipe, fitting or appurtenance.
         2) When pipe is constructed within the road, street, driveway or parking lot, granular backfill (VDOT Class 21A) is required for the full depth of backfill. Backfill shall be placed in 6-inch layers and compacted by tamping.
         3) Granular backfill (VDOT Class 21A) is required for the full depth of backfill where the trench is outside of the pavement but the nearest trench wall is within 5 feet of the edge of pavement.
         4) Pipe trenches shall be restored within 24 hours. When necessary, trenches may be restored temporarily with cold patch asphalt. When weather permits, temporary trenches must be restored permanently within 7 days.

G. Materials
   1. General
      a. Whenever proprietary equipment is specified, "or approved equal" is implied. All proposals for substitution shall be submitted in writing to the City of Winchester Department of Public Services for their approval.
   2. Water Mains
      a. Ductile iron pipe shall be zinc coated, conforming to AWWA C150 and C151 with the minimum properties:
         1) Coating system shall conform to ISO 8179

2) Coated with a layer of arc-sprayed zinc-200 g of zinc shall be applied per m^2 of pipe surface area.
3) Asphaltic top-coat shall be applied. The mean dry thickness shall be greater than or equal to 3 mils. The local allowable thickness is 2 mils.

b. Ductile iron pipe shall be encased in polyethylene in accordance with AWWA C105. Bag shall be V-Bio polywrap flat tube linear low-density polyethylene film (minimum 8 mils) or approved equal.

3. Pipe Fittings
   a. All pipe fittings shall be ductile iron conforming to AWWA C-110, C-111, and C-153. Fittings shall be cement-mortar lined and with a bituminous seal coat and epoxy coating.
   b. Fittings shall be short body standard with mechanical joints for buried installation and flanged for interior and exterior exposed installations.
   c. All fittings shall have a pressure rating of 350 psi or greater.
   d. Mechanical joint restraint for ductile iron fittings shall be incorporated in the design of the retainer gland. The gland shall include a restraining mechanism which, when activated, imparts multiple wedging action against the pipe which increases its resistance as pressure increases.
   e. Glands shall be designed to allow flexibility of pipe joints after installation and backfill. Glands shall be manufactured of ductile iron, conforming to ASTM A536-80. Glands shall have U.L. listing through 24-inch in size and Factory Mutual approval through 12-inch.
   f. Retainer glands shall be used on each side of fittings where the water main changes direction. Additional sets of retainer glands are required at pipe lengths above and below fittings as required.
   g. Retainer glands shall be Megalug Series 1100, Uni-Flange Series 1400, or approved equal.
   h. Thrust restraint on slip joint ductile iron pipe shall be American Ductile Iron Flex-Ring Joint, or approved equal.
   i. All accessories shall be blue fluoropolymer coated.
4. Valves
   a. Direct Bury Gate Valves
      1) Gate valves 12 inches and smaller shall be of the tight-closing resilient seated gate valves, which meet or exceed the requirements for AWWA C-515.
      2) All resilient seat valves are to be ductile iron body, internally reinforced molded natural rubber mounted, wedged disc, non-rising stem, tapered seat type.
      3) Valves shall have a clear, unobstructed water way when fully opened and shall be at least as large as the pipe inside diameter for which it is intended.
      4) Valves shall open counterclockwise and seating shall use compression closure.
      5) Valve end connections shall be mechanical joint.
      6) Top operating nut shall be 2-inch square operating nut.

7) The operating stem shall be a minimum diameter of 7/8-inch with a triple O-ring seal. The configuration of the O-rings shall be two above and one below the thrust collar.
8) Valves must have a 250 psi working pressure and 400 psi test pressure.
9) Valves installed with more than 5 feet of cover shall have extension rods added to bring the operating nuts to within 3 feet of the surface.
10) Manufacturer shall be Mueller Company (Model 2360), American Flow Control (Series 2500 Resilient Wedge Valve), and Kennedy (Model #7571 D.B.) or approved equal.

b. Exposed Gate Valves
   1) Valves shall meet requirements for direct bury valves with the following exceptions:
      a) Joints shall be flanged.
      b) Valve shall be rising stem.
      c) Valve will be manually opened using a hand wheel.
      d) Outside screw and yoke (OS & Y) type.

c. Butterfly Valves
   1) All water main 16 inches and greater in diameter shall use butterfly valves.
   2) All butterfly valves shall conform to the requirement specified for tight-closing rubber seated butterfly valves in AWWA C504.
   3) Valve bodies shall be close grained cast iron ASTM A126, Class B, or ductile iron ASTM Grade 65-45-12.
   4) Valves shall be epoxy-coated interior and exterior. This requirement applies to all interior ferrous parts including the disc.
   5) Operator shall be travelling nut type and fully enclosed. The valves shall be counterclockwise opening.
   6) Actuator shall be manual with hand wheel.
   7) Butterfly valves shall be DeZurick BAW, AWWA butterfly valves, Class 250, Henry Pratt Company HP250 (butterfly valve for buried service) or approved equal.

d. Combination Air Release and Vacuum Valves
   1) Air release valves shall be provided on water mains greater than 12 inches in diameter.
   2) Combination air release and vacuum valves shall function to automatically release small pockets of air which may accumulate while the system is pressurized and operating.
   3) Valve shall be cast iron valve body and cover, stainless steel ball, stainless steel trim and resilient seat.
   4) The air vent shall close drip tight, incorporating a renewable seat, which is field replaceable.
   5) Minimum pressure rating: 250 psig.
   6) Size: 2 inch
   7) Valves shall be HaVent Automatic model 993 or approved equal.

e. Valve Box Assemblies
   1) Valve boxes are to be installed on all valves within the water network. These boxes shall be two piece and screw type for adjustment to finish grade.

2) All valve boxes shall be installed upon the valve with the use of a Valve Box Adaptor II as manufactured by Adaptor, Inc, or approved equal. The adaptor shall be manufactured to fit the specific size and brand of both valve and valve box with which it is installed. The adaptor shall be made of a resilient rubber material. The adaptor shall be installed in lieu of hardwood blocking and shall be installed incidental to the valve and box installation.
3) Valve box shall be furnished with a 5-1/4 inch lid made of cast iron and marked "Water".
4) When valve may be subjected to traffic, the top of the valve box shall be flush with the final surface. An 18" x 18" concrete pad (6" thick) is required around valve boxes installed outside of pavement area.

5. Tapping Sleeves and Valves
   a. Tapping sleeves shall be ductile iron construction meeting ASTM Grade 65-45-12. Side flange seals shall be of the O-ring type. Sleeves shall be coated with asphaltic varnish in compliance with NSF-61.
   b. Stainless steel tapping sleeves may be used on pipe sizes 6 inch through 30 inch and shall be Ford Style FAST or FTSS, or approved equal.
   c. Tapping sleeves shall be American Flow Control Series 2800, or approved equal.
   d. Valves shall be American Flow Control Series 2500 resilient wedge valve or approved equal.
   e. Tapping valves shall be resilient seat type with bodies and bonnets made of ductile iron for 250 psi working pressure. Cutters used shall be at least 1/4-inch smaller than the valve size.
6. Fire Hydrants
   a. Hydrants shall be dry barrel conforming to AWWA C502, and have a traffic breakaway flange and stem coupling.
   b. Design of the hydrant shall be of the compression type main valve and O-ring seal between the operating nut and bonnet.
   c. Traffic breakaway flange shall be installed 4 inches from the final grade.
   d. Hydrant shall have a 6-inch inlet and a 4-1/2 inch valve opening. Outlets shall be one 4-1/2 inch streamer nozzle and two 2-1/2 inch hose nozzles. Outlet nozzles shall be field replaceable utilizing straight threads or quarter turn seal by an O-ring. Each nozzle cap shall be equipped with chain and gasket.
   e. Hydrant shall open right (clockwise) utilizing a pentagon shaped nut 1-1/2 inch in size.
   f. Install "out-of-service" signs on new fire hydrants until all testing is complete and the hydrants become active.
   g. Fire hydrants to be used as air release shall:
      1) Provide positive slope upward from hydrant tee to fire hydrant base.
      2) Include mechanical joint ductile iron pipe and fittings with retainer glands at each fitting required.
   h. Hydrants shall be American Darling, Model MK-73-5, as manufactured by American Flow Control, Kennedy Valve Guardian K81D, or approved equal. Upper barrel, lower barrel and base must be ductile iron painted yellow. Base bolts and nuts must be stainless steel.

i. Hydrant shall have a solid base surrounding the barrel no less than 24 inches by 24 inches by 6 inches deep. The solid base shall include high density concrete. Tamped soil is not considered a solid base.

7. Water Services
   a. In cases where existing services will be reused, the meter box and meter setting shall be brought to current standards by the contractor.
   b. 3/4-inch Water Service
      1) Water services to be installed in accordance with the City of Winchester Standard Details.
      2) Corporation stops shall conform to AWWA C800, minimum pressure rating of 250 psi, 3/4-inch ball style, as manufactured by Ford, Model FB1000 or approved equal. Connection at corporation stop shall be compression.
      3) Service line shall be 3/4-inch ID type "K" copper tubing and shall be one continuous piece from corporation stop to meter setting.
      4) Meter setting shall consist of a meter yoke, inlet angle valve, and outlet double check valve. The meter setting shall have two independent vertical cartridge check valves and be in conformance with ASSE 1024. Meter setting shall include:
         - iron yoke bar (Ford model Y502)
         - iron yoke expansion connector (Ford Y502)
         - yoke angle dual check valve (Ford HHCA94-323TV)
         - yoke angle ball valve (Ford BA94-223W)
      5) Meter box shall be 18 inches in diameter and 30 inches tall, high density polyethylene (HDPE), with an 18-inch diameter frame and 11-1/2 inch diameter lid. Meter box shall have a 10,000 lb. minimum crush rating and shall have a minimum wall thickness of ½ inch. The interior of the box shall be white for light reflection. Frame and lid shall be made of cast iron and shall be recessed to accommodate the Neptune Radio Read antenna. Frame and lid shall be A.Y. McDonald model number 74M32ARG. Traffic rated lids are required in areas subject to traffic; frame and lid shall be A.Y. McDonald meter box cover 74H32ARG.
   c. 1-inch and Dual ¾-inch Water Service
      1) Water services to be installed in accordance with the City of Winchester Standard Details.
      2) Corporation stops shall be 1-inch and shall conform to AWWA C800, as manufactured by Ford, Model FB1000 or approved equal.
      3) Service line shall be 1-inch ID type "K" copper tubing and shall be one continuous piece from corporation stop to meter setting.
      4) Meter box shall be 20-inch by 24-inch and 30 inches tall, #00202001. The interior of the box shall be white for light reflection. Frame and lid shall be made of cast iron and shall be recessed to accommodate the Neptune Radio Read antennae. Frame and lid shall be 20-inch A.Y. McDonald model number 74M4AR6. Traffic rated lids are required in areas subject to traffic and shall be Ford meter box cover X32H.
      5) 1-inch meter setting shall consist of a meter yoke, inlet angle valve, and outlet double check valve. The meter setting shall have two

independent vertical cartridge check valves and be in conformance with ASSE 1024. Meter settings shall include:
- Iron yoke bar (Ford model Y504)
- Iron yoke expansion connector (Ford Y504)
- Yoke angle dual check valve (Ford HHCA94-444TV)
- Yoke angle ball valve (Ford BA94-334W)

6) Dual ¾-inch Meter settings shall consist of two single meter settings connected by a U-branch (Ford U48-437.5)

d. 1-1/2 inch and 2-inch Water Services
   1) Water services to be installed in accordance with the City of Winchester Standard Details.
   2) Corporation stops shall be 2 inches in size and shall conform to AWWA C800, as manufactured by Ford, or approved equal.
   3) Service line shall be 2-inch ID SDR 9 polyethylene line and shall be one continuous piece from corporation stop to curb stop. Tracer wire shall be wrapped around the polyethylene service line and shall be connected on each end to the corporation stop and curb stop.
   4) Meter shall be set in a custom meter setting consisting of flanged angle valve on the inlet and outlet. Include bypass with ball valve and locking cap.
   5) Meter box shall be 4'-0" long x 4'-0" wide x 4'-0" deep as shown in Standard Detail WD-4.
   6) Access door shall be as manufactured by Bilco Door Company, Type PCM-2, or Halliday Products Model H1R3030. Dimensions shall be 2'-6" x 2'-6".
   7) Backflow device shall meet with applicable plumbing codes and City of Winchester Ordinance. Device must be installed outside of meter box.

e. Meter shall be paid for by the customer and supplied by the City of Winchester Department of Public Services. Meters 1-inch and larger require notification of 30-60 days for delivery and installation.

H. Cleaning, Testing and Disinfection
   1. General
      a. All lines shall be thoroughly cleaned and free of debris, trash or other foreign materials.
      b. Backfill and compaction shall be completed before testing.
      c. All valves must be completely opened and closed and all corporation stops and service lines in place prior to testing.
      d. Any valves that need to be operated in the existing system shall only be operated by the City of Winchester personnel.
      e. Hydrostatic and bacterial testing shall be performed within 30 days after the completed water main has been charged (filled).
   2. Pressure and Leakage Test
      a. General - Distribution Mains
         1) Testing shall be in accordance with the Virginia Department of Health and AWWA C600.
         2) Test pressure shall not exceed pipe or thrust-restraint design pressures.
         3) Test pressure shall not vary for the duration of the test.

4) Test pressure shall not exceed the rated pressure of the valves when the pressure boundary of the test section includes closed, resilient-seated gate valves or butterfly valves.
5) When hydrants are in the test section, the test shall be made against open hydrant valves.

b. Test Procedure - Distribution Mains
1) After the pipe has been laid all pipe shall be subjected to a hydrostatic pressure of not less than 150 psi or 1.25 times the working pressure at the highest point along the test section.
2) Each section of pipe to be tested shall be slowly filled with water.
3) Expel all air from pipeline.
4) Apply 100 percent of required test pressure at beginning of test. It is good practice to allow the system to stabilize at the test pressure before conducting the leakage test.
5) Maintain test pressure for a minimum of 2 hours.
6) There shall be zero pressure drop during the test period.
7) If the pressure cannot be maintained, the contractor shall locate and make approved repairs as necessary until the leakage is within the specified tolerance.
8) All visible leaks are to be repaired, regardless of the amount of leakage.

c. Test Procedure - Fire Lines
1) Test procedure is the same as described above, except that the test pressure shall be 200 psi, duration of test is 1 hour. There shall be zero pressure drop during the 1-hour test period.

3. Disinfection
a. Disinfection shall be performed after the pressure testing has passed and approved by the City of Winchester.
b. All water mains shall be disinfected and bacteriological testing completed immediately prior to being placed in operation.
c. The basic disinfection procedure consists of:
1) Preventing contamination materials from entering the water main during storage, construction or repair.
2) Removing, by flushing or other means, those materials that may have entered the water main.
3) Chlorinating any residual contamination that may remain, and flushing the chlorinated water from the main. A newly installed main shall be disinfected in accordance with AWWA C651, and the Virginia Department of Health regulations.
4) Protecting the existing distribution system from backflow due to hydrostatic pressure test and disinfection procedures.
5) Determining the bacteriological quality by laboratory test after disinfection.
6) Final connection of the approved new main to the active distribution system.
d. Chlorination shall be by the tablet method, unless otherwise approved in writing by the City of Winchester. This method may be used only if the pipe and appurtenances are kept clean and dry during construction. Alternate disinfection procedures may be required at the option of the

City of Winchester if the circumstances are such that the pipe and appurtenances are not kept clean and dry.

1) During construction, 5-g calcium hypochlorite tablets shall be placed in each section of pipe. Also, one such tablet shall be placed in each hydrant, hydrant branch and other appurtenances. Table 1 shows the number of tablets required for commonly used sizes of pipe.

Table 1. Number of 5-g calcium hypochlorite tablets required for dose of 25 mg/l

Length of Pipe Section, ft.					
Pipe Diameter (inches)	<= 13	18	20	30	40
	Number of 5-g calcium hypochlorite tablets				
4	1	1	1	1	1
6	1	1	1	2	2
8	1	2	2	3	4
10	2	3	3	4	5
12	3	4	4	6	7
16	4	6	7	10	13

2) Filling and contact. When installation has been completed, the main shall be filled with water at a rate such that water within the main will flow at a velocity no greater than 1 ft. /s. Precautions shall be taken to ensure that air pockets are eliminated. This water shall remain in the pipe for at least 24 hours.

e. Final flushing: After the required retention period, the chlorinated water shall be flushed from the main using potable water. However, the chlorinated water shall not be flushed out until the residual is less than 1 mg/L. A reducing agent shall be applied as required to achieve this residual.

f. After final flushing and before the main is placed in service, two consecutive sets of acceptable samples, taken at least 24 hours apart, shall be collected from the main. At least one set of samples shall be collected from every 1,000 feet of the new main, plus one set from the end of the line and at least one set from each branch. Samples shall be collected in the presence of an inspector for the Department of Public Services in bottles provided by the City. Samples shall be tested for bacteriologic quality by the City of Winchester, and shall show the absence of coliform organisms. If contamination is indicated, then the disinfection/testing procedure must be repeated.

III. Sanitary Sewer Collection Systems

A. General

1. The following minimum requirements are considered acceptable to the City of Winchester in the collection of wastewater from residential and nonresidential customers. Deviation from these may be allowed if in accordance with sound engineering standards, and if the deviation will not increase the likelihood of a system failure or impact the level of service provided to existing customers on the City of Winchester collection system.
2. As a general guideline, standards shall be those set forth in Sewage Collection and Treatment Regulations, State Water Control Board, Title 9, Agency 25, Chapter 790 of the Virginia Administrative Code (VAC), as amended.
3. When the City of Winchester standards differ from state and/or federal regulations, the most stringent requirement shall apply.
4. All drawings, specifications, and engineer's reports submitted for approval shall be prepared by or under the supervision of a licensed Professional Engineer with a current registration in the Commonwealth of Virginia in accordance with Title 54.1, Chapter 3 of the Code of Virginia, 1950, as amended. Where applicable, design may be performed under the direction of a certified Land Surveyor B in accordance with Sec. 54.1-408 of the above-cited code. The front cover of each set of drawings, of each copy of the engineer's report, and of each copy of the specifications submitted for review shall bear the signed imprint of the seal of the above licensed professional who prepared or supervised the preparation, and shall be signed with an original signature and date.
5. The engineer shall be responsible for obtaining the review and necessary approvals of all drawings and specifications by applicable City, County, State and Federal agencies having jurisdiction. Copies of such approvals shall be submitted to the Winchester Department of Public Services at the time of final approval.
6. The developer is required to design and construct his/her system, properly sized and at an appropriate location, to permit future extensions to be made at the limits of the subdivision or development in question.
7. The City of Winchester has a Sewer Use Ordinance that regulates discharge to the collection system. Waste from commercial/industrial users may require pretreatment prior to discharge to the collection system.
8. Restaurants, bakeries, and other facilities involved in the preparation of food have the potential to discharge oil and grease to the sanitary sewer system. It is the discharger's responsibility to install and properly maintain such a pretreatment system to ensure that oil and grease are not discharged to the sanitary sewer in accordance with the Winchester City Code. Oil/water separators, where required, shall be shown on the plans and shall comply with the requirements of the Plumbing Code.
9. Any Contractor that will perform sewer main taps, work within sewer easements or make road cuts for the purpose of working on the sanitary sewer must have Class A, Heavy Highway contractor's license. The Contractor must have 3 years of sanitary sewer experience, which may be requested by the City prior to allowing work to commence.

B. Engineer's Report

Requests for extensions of sewer lines shall be accompanied by an engineer's report, which shall present the following information as applicable:

1. A description of the nature and extent of the area to be served. Sewer lines are to be designed to serve the entire service area of which the subdivision or development is a part. Elevation of the sewer system must be designed such that future extensions can serve the entire area that naturally drains toward the system.
2. An appraisal of the future requirements for service, including existing and potential connections, provisions for extending the system to include additional area. The engineer should take into consideration flow rates that may be derived for different zoning and land use classification that exists or could exist in the area of development.
3. Average daily flow and peak hourly flow.
4. Design flow and capacity for each pipe segment.

C. Flow Requirements
   1. Residential
      a. Residential uses include single family units or townhouses.
      b. Average daily flow for residential areas shall be based on 350 gallons per day per unit.
      c. When deviations from the above per dwelling rates are proposed, flow data from existing similar developments shall be included with the submission.
   2. Nonresidential
      a. The required flow for commercial, industrial or other nonresidential uses shall be as determined by the engineer and reviewed and approved by the City of Winchester.
      b. For considering development of surrounding areas where land is zoned for industrial or commercial usage, and to insure adequate capacity upon development, design shall be based on an average daily flow of 4,000 gallons per day per acre.
   3. Peak flow — lateral and sub-main sewers
      a. Lateral — a sewer that has no other common sewers discharging into it.
      b. Sub-main — a sewer that receives flow from one or more lateral.
      c. Minimum peak design flow should be 400 percent of the average design flow.
   4. Peak flow — Main, trunk and interceptor sewers
      a. Main or trunk — a sewer that receives flow from one or more sub-main sewers.
      b. Interceptor — a sewer that receives sewage flow from a number of gravity mains, trunk sewers, force mains, etc.
      c. Minimum peak design flow should be 250 percent of the average design flow.

D. System Design
   1. General
      a. The plans shall provide for future connections by extending mains to the exterior boundaries of the development when applicable.
      b. The collection system developed shall be compatible with the City of Winchester's comprehensive sewer plan.
   2. Location
      a. Mains shall be located to provide service to each lot within a subdivision. All mains shall be installed in dedicated roadways, public rights-of-way, or

utility easements dedicated to the City of Winchester.

b. All manholes proposed within areas where vehicles travel shall be located either on the centerline of the road or center of the traveling lane.
c. All lateral services shall provide a cleanout at the edge of the public rights-of-way or easement or between the curb and sidewalk. Lateral piping shall be extended to the property line for all new development.
d. When connecting PVC main pipe to either clay or cast iron, Indiana Seal Shear Guards or approved equal are required.
e. A private lateral shall not be located parallel within road right-of-way.
f. Laterals less than 6 inches in size shall not be connected to manholes.
g. Every effort should be made to locate sewers outside of flood prone areas. Sewer lines and/or manholes shall not be located in drainage ditches, or pass under stormwater detention facilities.
h. Separation of water mains and sewers:
    1) Parallel installation. Under normal conditions water mains shall be laid at least 10 feet horizontally from a sewer or sewer manhole. The distance shall be measured edge-to-edge.
    2) Parallel installation. Under unusual conditions when local conditions prevent a horizontal separation of 10 feet, the water main may be laid closer to a sewer or sewer manhole provided that:
        a) The bottom of the water main shall be at least 18 inches above the top (crown) of the sewer.
        b) Where this vertical separation cannot be obtained, the sewer shall be constructed of Class 52, ductile iron sewer pipe, pressure tested in place without leakage prior to backfilling.
        c) The sewer manhole shall be of watertight construction and tested in place.
    3) Crossing. Under normal conditions, water lines crossing sewers shall be laid to provide a separation of at least 18 inches between the bottom of the water line and the top of sewer whenever possible. Under unusual conditions when local conditions prevent a vertical separation of 18 inches, the following construction shall be used:
        a) Sewers passing over or under water mains shall be constructed of Class 52, ductile iron sewer pipe according to the standards for ductile iron gravity mains.
        b) Adequate structural support shall be provided for the mains to prevent excessive deflection and settling. Support may be provided by a concrete cradle sized appropriately for the sizes of the mains and the surrounding soil conditions.
        c) A full length of the water main pipe section shall be centered at the point of crossing so that the joints shall be equidistant and as far as possible from the sewer.
    4) Crossing. When it is necessary for sanitary sewer mains to cross above water mains, the water main shall be protected by providing:
        a) A vertical separation of at least 18 inches between the bottom of the sewer and the top of the water main.
        b) A full length of the sanitary main pipe section shall be centered at the point of crossing so that the joints shall be equidistant and as far as possible from the water main.
    5) Crossing. All crossings shall be as close to 90 degrees as possible.

6) No water main shall pass through or come in contact with any part of a sewer manhole.

i. Where the sanitary sewer is installed parallel to a storm drainage structure, there shall be at least 10 feet horizontally, measured center to center, between them. In a crossing installation, a minimum separation of 12 inches measured from edge to edge shall be provided.

j. In cases where sanitary sewers are to be constructed on steep grades (20 percent or greater), sewers shall be anchored securely with concrete anchors or other approved means. Suggested minimum anchorage is as follows, but should be determined by the Engineer:
   1) Not over 36 feet center to center on grades 20 percent to 35 percent.
   2) Not over 24 center to center on grades 35 percent to 50 percent.
   3) Not over 16 feet center to center on grades 50 percent and over.

k. Easements
   1) An "easement" shall mean any area to which the City has unlimited access for servicing utility lines.
   2) Permanent easements shall be a minimum width of 20 feet.
   3) Wider easements may be required where more than one facility may occupy an easement, or in consideration of line size, depth or access requirements.
   4) Off-site easements shall be recorded and the Instrument Numbers of the recordation shown on the utilities plan before acceptance of the utilities into the city's system.
   5) No building or other structure, including but not limited to fences and decks, shall be erected over permanent easements.
   6) Any plantings installed within an easement may be damaged or destroyed during the course of servicing. The City is not liable for damage to any improvements or plantings within an easement. The City will reseed as necessary any bare or disturbed soil for erosion control purposes.
   7) Small and medium shrubs, groundcovers, or grasses may be planted within an easement. Small trees (under 30 feet in height at maturity) may be planted a minimum of 10 feet from the centerline of the closest pipeline within the easement or 10 feet from the center of the easement, whichever is greater. Small trees as defined above shall include redbuds, fringe tree, serviceberry, crape myrtle, golden raintree, hawthorne, hornbeam, saucer or star magnolia, sassafras, or smoke tree. Large trees shall not be placed within any City Utility easement.

3. Size
   a. No gravity main shall be less than 8 inches in diameter.
   b. Standard sizes of gravity mains shall have nominal diameters of 8 inches, 10 inches, 12 inches, 15 inches, 21 inches, 24 inches, 30 inches and 36 inches.
   c. In general, the pipe diameter of sub-trunk and trunk sewers should be continually increasing with increase in tributary flow.
   d. Changes in pipe size or material shall not occur between manholes.
4. Bedding and Backfill
   a. Outside of Traffic Area (see Detail WS-1)
      1) The sewer main pipe, fittings and appurtenances shall be bedded by hand, or approved mechanical method, from 6 inches below the pipe to

12 inches above the pipe with crushed stone classified as VDOT No. 57. Bedding material shall be deposited in the trench for its full width of each side of the pipe, fitting or appurtenance.

2) From 12 inches above the pipe to the final grade, excavated trench material containing stones no greater than 3 inches in diameter may be used as backfill material, unless otherwise specified.

b. Within Traffic Area (See Detail WS-2)

1) The sewer main pipe, fittings and appurtenances shall be bedded by hand, or approved mechanical method, from 6 inches below the pipe to 12 inches above the pipe with crushed stone classified as VDOT No. 57. Bedding material shall be deposited in the trench for its full width of each side of the pipe, fitting or appurtenance.

2) When pipe is constructed within the road, street, driveway or parking lot, granular backfill VDOT Class 21A) is required for the full depth of backfill. Backfill shall be placed in 6-inch layers and compacted by tamping.

3) Granular backfill (VDOT Class 21A) is required for the full depth of backfill where the trench is outside of the pavement but the nearest trench wall is within 5 feet of the edge of pavement.

4) Pipe trenches shall be restored within 24 hours. When necessary, trenches may be restored temporarily with cold patch asphalt. When weather permits, temporary trenches must be restored permanently within 7 days.

5. Depth

a. The minimum depth of sewer lines subject to traffic loads shall be 3 feet of cover above the top of pipe.

6. Pipe Slope

a. All gravity sewers shall be designed and constructed to give mean velocities, when flowing full, of between 2 and 10 feet per second, based on Manning's formula and using "n" value of 0.013. The minimum velocity requirement is necessary to prevent the deposition of solids. The following are minimum slopes to be provided; however, slopes greater than these are desirable:

Sewer Diameter	Minimum Slope in feet per 100 feet
4 inch lateral	2.00
6 inch lateral	1.00
8 inch	0.40
10 inch	0.28
12 inch	0.22
15 inch	0.15
18 inch	0.12
21 inch	0.10
24 inch	0.08
30 inch	0.06
36 inch	0.05

b. A velocity in excess of 10 feet per second may be permitted with proper

consideration of pipe material, abrasive characteristics of the wastewater, turbulence, and thrust at changes in direction.

7. Manholes
   a. Manholes shall be provided at all intersections of gravity sewer mains, changes in grade, alignment, direction or changes in sewer line pipe size.
   b. The maximum distance permitted between manholes is 400 feet.
   c. All sewer lines shall have a 0.1 feet drop through the manhole. Where sewer lines change direction, the invert elevation shall drop 0.25 feet (typical) through the manhole.
   d. Manholes shall be installed at the termination of a sewer line or at the end of any gravity main that can be extended in the future to serve adjacent properties.
   e. Watertight manhole covers are to be used whenever the manhole is subject to flooding or is located within the 100-year flood plain.
   f. Manholes located along streams, creeks, or other bodies of water may be required to be extended above the 100-year flood plain.
   g. Manholes located outside of traffic areas shall be extended 18 inches above ground level if it will not create a hazard.
   h. Drop manholes may be used if the invert of the upstream sewer is 37 inches or more above the top of the downstream sewer leaving the manhole. All drops for sewers 8-12 inches in diameter shall be interior drops, while those for sewers 15” and above shall be exterior as shown in the City of Winchester standards.
   i. All sewer lines 6-inch diameter and larger must be connected to the collection system through a manhole.
   j. The minimum horizontal angle between the upstream and downstream sewer shall be 90 degrees.
8. Road, Railroad and Stream Crossings
   a. Major road crossings and railroad crossings shall be encased in steel casing and piping shall be ductile iron. Additional requirements of the regulatory agency responsible for the roadway/railroad shall be met.
   b. Stream crossings shall be encased in steel casing or made with bell-joint ductile iron pipe. Manholes shall be provided at both ends of the water crossing; the manholes shall be easily accessible and not subject to flooding.
9. Sewage Pump Stations and Force Mains
   a. Sewage pump stations will be used only when it has been determined to be the only practical way to provide sanitary service and upon approval of the Winchester Department of Public Services.
   b. A detailed engineering report shall be submitted to and approved by the Winchester Department of Public Services.
   c. The design must conform to the minimum standards set forth in the Virginia State Water Control Board’s Sewage Collection and Treatment Regulations. At a minimum, the following data shall be provided:
      1) Complete design calculations for the pump station and force main, including the head discharge curve.
      2) At least two views of the pump station, plan view and cross section, shall be provided.
      3) Electric panel detail.
      4) Pump and alarm control elevations.

5) Inlet and outlet pipe elevations.
6) Finished grade and foundation elevations.
7) Design pump capacity, horsepower, total dynamic head, manufacturer and model number.
8) Sump capacity and cycle time.

d. The design shall provide for continuous operability of the pump station by including an auxiliary stand-by generator that can operate sufficient pumps to deliver the design peak flow, subject to the approval of the Winchester Department of Public Services.
e. Force mains shall be designed with a minimum flow velocity of 3.0 feet per second, and a maximum flow velocity of 8.0 feet per second. Minimum size shall be 4 inches in diameter. A constant grade shall be used where feasible. Valves shall be provided at appropriate locations.

E. Materials

1. General
   a. Whenever proprietary equipment is specified “or approved equal” is implied. All proposals for substitution shall be submitted in writing to the City of Winchester Department of Public Services for their approval.
2. Gravity Mains
   a. Sanitary sewer mains shall be polyvinylchloride (PVC) SDR 26 heavy wall sewer pipe and shall meet or exceed ASTM D-3034. Joints shall be gasketed, bell and spigot type with the bell made integral with the pipe.
   b. Sanitary sewer mains installed deeper than 15 feet shall be ductile iron pipe and coated.
   c. Each length of pipe shall be marked with the manufacturer’s name, trade name, nominal size, class, hydrostatic test pressure, manufacturer’s standard symbol to signify it was tested, and date manufactured.
   d. When required because of crossing or shallow bury, sewer mains shall be minimum Class 52 Ductile Iron that meets the requirements of ASTM A746, with a bituminous seal coating and lined with Protecto 401 or approved ceramic epoxy meeting the standards of AWWA C210.
   e. When connecting PVC main pipe to either clay or cast iron, Indiana Seal Shear Guards or equal approved equal are required
3. Force mains shall be pressure class PVC or ductile iron.
4. Lateral Piping
   a. PVC pipe used for installation of lateral services shall be 4-inch unless otherwise specified and have a minimum wall thickness of SDR 26. All fittings shall be gasketed.
   b. Laterals greater than 8 feet deep shall use push-joint ductile iron sewer fittings with bituminous seal coating and epoxy lining and SDR26 heavy wall lateral piping.
   c. D.W.V. fittings shall comply with ASTM D-2665, and be socket by socket. Gasketed adapter shall meet ASTM D-3139 with gaskets meeting ASTM F-477.
   d. 4-inch main line and lateral cleanout wyes shall be gasket by gasket by gasket on stand pipe lead. Lateral cleanout wyes shall be combination wye 1/8 turn (long turn).
   e. Cleanouts for 4-inch and 6-inch laterals, located in grass areas, shall be cast iron gasketed cleanouts with a recessed brass screw plug, Panella

model PA4SV-CSK.

f. Cleanouts subject to traffic or in the sidewalk area shall have a lamp hole frame and cover over a PVC cleanout top. Lamp hole frames and covers shall be Neenah Foundry Co. R-1975-A2 or approved equal.
g. Lateral connections to an existing sewer shall be made with a boot-n-saddle with stainless steel straps and appropriate rubber fitting.
h. Tracer wire shall be provided on all sanitary laterals within 6 feet of the surface
i. When connecting PVC lateral pipe to existing clay or cast iron pipe, Indiana Seal Shear Guards or approved equal are required.

5. Pipe Fittings
   a. PVC fittings used in a gravity collection system shall be of the same SDR rating as the collection pipe being used.
   b. Fittings are permitted only on service laterals and drop manholes in gravity collection system.
   c. Fittings used in a force main system shall be mechanical joint and made of ductile iron. Ductile iron fittings shall be Class 350 conforming to ASTM A536-72. Nominal thickness of fittings shall be equal to Class 54 ductile iron. All fittings shall be cement lined.
6. Valves - Force Main System
   a. Direct Bury Valves
      1) All valves shall be resilient seat conforming to requirements of AWWA Standard C509. They shall be manual opening, non-rising stem equipped with a 2-inch square operating nut for installation in the vertical position.
      2) The valve body shall be made of ductile iron with mechanical joints. The body of the valve shall be epoxy-coated interior and exterior, and have a smooth bottom design.
      3) Valve shall open left (counterclockwise) and seating shall use compression closure.
      4) The operating stem shall be a minimum diameter of 7/8 inch with a double 0-ring seal. The configuration of the 0-rings shall be above and below the thrust collar.
      5) Valves must have a 250 psi working pressure and 400 psi test pressure.
   b. Exposed Gate Valves
      1) Valves shall meet requirements for direct bury valves with the following exceptions:
         a) Joints shall be flanged.
         b) Valve shall be rising stem.
         c) Valve will be manually opened using a handwheel.
         d) Outside-screw-and-yoke (OS & Y) type.
   c. Combination Air Release and Vacuum Valves
      1) The air vent (release) shall be float operated and shall incorporate a simple level mechanism to enable the valve to automatically release accumulated air while the system is pressurized and operating.
      2) All combination air release and vacuum valves shall be installed in a vault as set forth in the Standard Details.
      3) The air vent shall close drip-tight, incorporating a renewable seat that is field replaceable.
      4) The body and cover of the air vacuum release assembly shall be made

of cast iron conforming to ASTM A48, Class 35. All interior parts of the assembly shall be stainless steel.

5) Valves shall be Val-matic No. 801 BWA or approved equal.

7. Manholes
   a. Manholes shall be precast reinforced concrete capable of sustaining an H-20 loading and meeting standards put forth under ASTM C-478.
   b. Manholes shall have a minimum inside diameter of 48 inches with a minimum wall thickness of five inches.
   c. The base section shall be monolithic to a point 12 inches above the crown of the incoming pipe with a minimum base thickness of 8 inches. The base shall have a diameter 12 inches larger than the barrel of the manhole.
   d. Pipe holes up to 12 inches in new manholes shall be properly located and cast in place with appropriate boot (Tylox by Hamilton Kent or approved equal). After assembly, pipe to be grouted in place using non-shrinking grout inside the manhole. Pipe holes from 15 inches and above are required to be cored.
   e. New mains or six-inch laterals into existing manholes may be cored and shall be sealed using Kor-N-Seal or Lock-Joint with two stainless steel bands by Dukor Co., Milford, NH, to hold the pipe in position.
   f. Cone sections shall be eccentric narrowing from 48 inches to 24 inches inside diameter.
   g. Flat top sections shall be used in place of a cone section for manholes less than 5 feet deep. The 24-inch access hole shall be offset to allow easy access to steps and shall be reinforced to support H-20 loading.
   h. The exterior of the manhole shall be covered with fibrous bitumastic coating.
   i. Manhole steps conforming to the applicable provisions of ASTM Specifications C 478 such as aluminum 14967 as manufactured by Alcoa or plastic steps manufactured by MA Industries or equal, shall be factory built into precast sections. Step spacing and alignment to be maintained uniform and vertical throughout the depth of the manhole.
   j. Each manhole section shall have not more than two holes for the purpose of handling and laying. These holes shall be sealed with cement mortar.
   k. Joints of the manhole sections shall be of the tongue and groove type; sections shall be joined using profile gaskets for single step joints such as Type 4G manufactured by Press-Seal Gasket Corp., or equal. Gaskets shall conform to the physical property requirements of ASTM standard C 443 and C 361.
   l. All joints, holes, etc., shall be sealed with cement mortar.
8. Manhole Frame and Cover
   a. Manhole frames and covers shall be as manufactured by Neenah Foundry catalog #R-1643, component #N1371-0061 (frame), and #N1371-0062 (lid), or approved equal.

F. Inspections and Testing
1. General
   a. All costs of cleaning, inspection and testing are to be borne by the Contractor and/or Developer.
   b. Cleaning, televising and testing shall be performed a minimum of 30 days after the completion of backfill and compaction, and shall be witnessed by the City. The Contractor or Developer shall contact the City at the start of

the waiting period.

c. Any portion of the sanitary sewer system failing to meet the inspection or testing requirements of the City of Winchester shall be corrected to the satisfaction of the City. The costs for such corrections shall be borne by the Contractor and/or Developer.
d. All repair methods, other than replacement of the defective areas with new materials, shall be subjected to prior approval of the City. Grouted, collared, clamped, or otherwise patched sewer pipe shall not be acceptable.
e. All unacceptable conditions found during television inspection must be corrected and re-televised.

2. Gravity Sewer Lines
   a. The completed sanitary sewer shall be high-pressure water jet cleaned and subjected to a low pressure air test. In accordance with the following procedures:
      1) All service laterals, cleanouts, stubs and fittings within the sewer test section shall be properly capped or plugged during construction to prevent air loss that could cause an erroneous air test result.
      2) Plugs shall be supplied and installed by the Contractor in the line to be tested at each manhole. Each plug shall be securely placed.
      3) Low pressure air shall be slowly introduced into the sealed line until a constant internal pressure of 4.0 psi is maintained.
      4) After a constant pressure of 4.0 psi is reached, the air supply shall be throttled back to maintain that internal pressure for at least two minutes.
      5) After the stabilization period, the air hose from the control panel to the air supply shall be shut off or disconnected, and the test shall begin.
      6) For a section of the line to pass, there shall be zero leakage for a five-minute interval after the supply has been shut off.
   b. The entire length of all flexible sewers shall be tested for deflection using a "go-no-go" mandrell (95% of the pipe's internal diameter).
   c. Sewer line sections shall be visually inspected by means of a closed circuit television. The inspection shall be done one manhole section at a time and recorded on a VHS cassette. Sewers are to be flow tested before television inspection to ensure no ponding occurs.
      1) The television camera used for the inspection shall be one specifically designed and constructed for such inspection. The image shall be clear enough to enable the City representative and others viewing the monitor to easily evaluate the interior condition of the pipe. The inspection shall be recorded on a DVD or flash drive and the City shall retain a copy of the recording.
      2) The visual inspection may be provided by an approved TV inspection firm or by the City. If the Developer should request this service from the City, he/she shall be charged per linear foot inspected at the current rate.
      3) Lighting for the camera shall be suitable to allow a clear picture of the entire periphery of the pipe. The camera shall have a footage-recording device and the footage shall be displayed on the monitor.
      4) Unacceptable conditions that adversely affect the ability of the system to function as designed or to be properly maintained may include, but are not limited to the following:
         a) Protruding taps.

b) Root intrusion.
c) Cracked or faulty pipe.
d) Improper pipe repair.
e) Misaligned or deformed pipe.
f) Debris in line.
g) Infiltration/exfiltration.
h) Bellies or sags with a depth greater than or equal to 10% (or a maximum of 1-1/2 inches) of pipe diameter and/or a length greater than 25 feet.

3. Manholes - Vacuum Method
   a. Precast concrete manholes shall be tested in accordance with ASTM C 1244-93, standard test method for concrete sewer manholes by the negative air pressure test (vacuum method).
   b. Manholes shall be tested after installation with all connections in place.
   c. Procedure for testing shall be as follows:
      1) Temporarily plug all pipes entering the manhole at least eight inches into the sewer pipe. The plug must be inflated at a location past the manhole/pipe gasket, and braced to prevent the plugs or pipes from being drawn into the manhole.
      2) The test head shall be placed inside the frame at the top of the manhole and inflated, in accordance with the manufacturer's recommendations.
      3) A vacuum of ten inches of mercury (10" Hg) shall be drawn on the manhole. Shut the valve on the vacuum line to the manhole and shut off the pump or disconnect the vacuum line from the pump.
      4) The pressure gauge shall be liquid filled, having a 3.5 inch diameter face with a reading from zero to 30 inches of mercury.
      5) The manhole is considered to pass the vacuum test if the time for the vacuum reading to drop from 10" to 9" Hg is one minute or more.
      6) If the manhole fails the test, necessary repairs shall be made. The vacuum test shall be repeated until the manhole passes the test.
      7) All temporary plugs and braces shall be removed after each test.
   d. Manholes shall show no signs of ponding water in the inverts.
4. Force Mains - Exfiltration Method
   a. All force mains shall be tested at a minimum pressure of at least 50 percent above the design operating pressure, for at least 30 minutes. Leakage shall not exceed the amount given by the following formula:

$$L = \frac{ND\sqrt{P}}{1850}$$

where: L is allowable leakage in gallons per hour
N is the number of pipe joints
D is the pipe diameter in inches
P is the test pressure

5. Force Mains – Air Testing
   a. The design operating pressure of a force main is expressed as total dynamic head (tdh). (TDH is measured in feet of water. It is known that 34 feet of water equals 14.7 psi.) The project drawings shall show the TDH.

b. The formula for obtaining the testing pressure (P) shall be:

$$P = 0.65\,(H)$$

where P= test pressure in psi
H= total dynamic head (tdh) in feet of water at design operating point.

c. Specific pressure used in the test shall be subject to the approval of the City.
d. The air test is to be conducted between the pump station and line's discharge manhole. The test equipment shall consist of:
   1) Two plugs (one tapped and equipped for air inlet connection)
   2) A shut-off valve
   3) A pressure regulating valve
   4) A pressure reduction valve
   5) A monitoring pressure gauge having a pressure range of 5 psi greater than the required test pressure. The test equipment shall be set up outside the manhole or pump station for easy access to reading.
e. Air shall be supplied slowly. When the required pressure has been reached, it shall be maintained for five minutes to insure the pipe's internal pressure has been stabilized. After stabilization, the air supply shall be shut off and the test begun.
f. For the section of line to pass, there shall be zero leakage for 60 minutes after the valve has been shut off.
g. The test must be done in the presence of a City Utilities inspector.

6. Pump Station Wet Wells
   a. Pump station wet wells shall be tested by either the ex-filtration or vacuum method.

IV. Stormwater Collection Systems

A. General

1. The following minimum requirements are considered acceptable to the City of Winchester for the collection and detention of stormwater runoff. Deviation from these may be allowed if: a) the deviation is in accordance with sound engineering standards; b) the deviation will not increase the likelihood of a system failure; c) the deviation will not adversely impact the environment or others.
2. As a general guideline, standards shall be those set forth in the latest editions of the Virginia Erosion and Sediment Control Handbook, the Virginia Stormwater Management Handbook, and the Virginia Department of Transportation Drainage Manual. If the standards set forth in these manuals conflict for a particular application, the City Engineer shall determine which standard is to be applied.
3. When the City of Winchester standards differ from state and/or federal requirements, the most stringent requirement shall apply.
4. All drawings, specifications, and engineer's reports submitted for approval shall be prepared by or under the supervision of a registered professional engineer with a current registration in the Commonwealth of Virginia in accordance with Title 54.1, Chapter 3 of the Code of Virginia, 1950, as amended. Where applicable, design may be performed under the direction of a certified Land Surveyor B, in accordance with Sec. 54.1-408 of the above-cited code. The front cover of each set of drawings, of each copy of the engineer's report, and of each copy of the specifications submitted for review shall bear the signed imprint of the seal of the above licensed professional who prepared or supervised the preparation, and shall be signed with an original signature and date.
5. The engineer shall be responsible for obtaining the review and necessary approvals of all drawings and specifications by applicable City, County, State and Federal agencies having jurisdiction. Copies of such approvals shall be submitted to the Winchester Department of Public Services at the time of final approval.

B. Stormwater Report

1. All drainage calculations shall be incorporated into a stormwater report, which shall present the following information as applicable. If the necessary calculations are minimal, they can be included on the plan sheets.
   a. A description of the computer software used and references to charts and tables used. Computer spreadsheets or programs created “in-house,” used in lieu of standard forms or standard manual calculations, shall be substantiated, at least initially, with manual calculations showing equivalent results. Acceptance of, or request for substantiation of “in-house” spreadsheets and programs will be the decision of the City Engineer.
   b. The following computations shall be shown for both pre-developed and post-developed conditions:
      1) The stormwater report or the plan set shall show the grading plan with the boundaries, acreages, and C-factors or CN values for all drainage areas contributing stormwater to the site.
      2) Flow paths and calculation of times of concentration.
      3) Runoff computations.

c. Computations showing the adequacy of proposed or existing structures including capacity, water surface elevation (hydraulic grade line), and velocity.
d. Computations showing adequate outfall.

C. Stormwater Design
1. General
a. An evaluation using verifiable engineering calculations shall be performed for all proposed drainage systems including, but not limited to, channels, inlets, and conduits. At a minimum, this evaluation shall show adequate hydraulic capacity for conveyance of the ten year storm event.
b. Due consideration must be given to less frequent storms, up to and including the 100-year storm event. The design of drainage systems shall generally provide for overland relief of the 100-year storm event without flooding or damaging buildings and structures.
c. The drainage system shall be designed with an attempt to closely maintain existing drainage divides and must not create adverse impact on upstream or downstream properties
d. Drainage designs must account for any off-site drainage that will be collected by the drainage system or that will flow through any part of the site. Ultimate developed condition of currently undeveloped areas within a watershed shall be based upon the current or anticipated zoning of those areas.
e. All systems shall be designed to convey runoff to the flow line of a natural watercourse or to an adequate conveyance system.
f. The owner or developer may continue to discharge stormwater as sheet flow (non-concentrated) onto an adjoining property if, at the same location:
1) The post-development peak runoff rate based on documentation and calculations does not exceed the pre-development peak rates.
2) The duration of the flow does not increase under post-development conditions.
g. The owner of developer may not create a new discharge of concentrated stormwater from a pipe, culvert, channel, or other drainage structure, onto or through lands of others without first obtaining a permanent storm drainage easement and ensuring that adequate conveyance exists downstream between the point of discharge and the nearest natural or man-made waterway.
h. If off-site downstream construction and easements are required to construct an adequate channel outfall, no plans shall be approved until such storm drainage easements, extending to the nearest natural or man-made watercourse, have been obtained and recorded. It will be the responsibility of the developer to obtain all off-site easements.
2. Storm sewer systems
a. All publicly owned storm inlets and manholes shall include inlet/invert shaping per VDOT standard IS-1.
b. No concentrated flow greater than one cubic foot per second, based upon the 10-year storm, shall cross a sidewalk or curb.
c. Culverts and storm sewers shall be of adequate size to transport the runoff from the 10-year storm, for the ultimate developed condition of the subject property. Contributions of off-site flow from permanently developed properties shall be based upon existing conditions. Contributions of off-site flow from

undeveloped properties shall be calculated based upon the two-year fully developed flow (undetained) from such properties. Plans shall account for overland relief resulting from less frequent events.

d. The hydraulic grade line of storm sewers for the post-developed 10-year storm shall be lower than the gutter line or grate inlet top elevation at all points.
e. All publicly-owned storm sewer pipes within traffic-bearing areas shall be reinforced concrete pipe with a minimum diameter of 15 inches or equivalent elliptical size. Publicly-owned storm sewer pipe in non-traffic bearing areas may be corrugated HDPE pipe with a minimum diameter of 15 inches.
f. All pipes shall terminate with flared end sections or concrete headwalls. Box culverts shall include concrete headwalls and end walls, which shall be located a minimum of 25 feet from the edge of pavement if the culvert is subject to vehicular traffic.
g. The outfall conditions of pipes and culverts shall be designed to withstand the velocities produced during the 2-year storm without erosion.
h. Pipe shall not deflect between storm structures. Pipe on slopes greater than 20 percent shall be anchored.
i. Minimum cover for storm sewer pipe within the right-of-way shall be according to the City of Winchester standard detail SD-1. Outside the right-of-way, the minimum cover, from finished grade to the outside crown of pipe, shall be the greater of one foot or half the pipe diameter.
j. In parallel installations, under normal conditions, storm sewer pipes shall be laid at least 10 feet horizontally from water lines and sanitary sewer lines. The distance shall be measured from outside edge to outside edge.
k. In general crossings situations, storm sewer pipes shall maintain a minimum vertical distance of 18 inches from water mains and 12 inches from sanitary sewer lines. In cases where this separation is impossible to achieve, the water or sanitary sewer line shall be protected in accordance with the appropriate City of Winchester utility standard. In cases where the water or sanitary sewer line is not owned by the City of Winchester, the crossing shall be governed by the regulations of the authority which owns the utility in question.
l. Test pits will be required and shall be shown on the plans for all crossings which involve gas lines, water mains 12 inches in diameter and larger, sanitary sewer crossings that have minimum clearance, and all fiber optic telephone service lines. Test pits shall be dug and clearances verified prior to installing any portion of the storm sewer system.
m. An "easement" shall mean any area to which the City has unlimited access for maintaining adequate drainage.
n. Permanent easements shall be a minimum width of 20 feet. Wider easements may be required where more than one facility may occupy an easement, or in consideration of structure size, depth or access requirements. The extent of drainage easements shall be dependent on upstream and downstream conditions and the scope of maintenance needed to maintain adequate drainage.
o. Off-site easements shall be recorded and the Deed book and Page Numbers of the recordation provided to the City Engineer before approval of the as-built plans and release of the construction bonds.
    1) No building or other structure, including but not limited to fences and decks, shall be erected over permanent easements.

2) Any plantings installed within an easement may be damaged or destroyed during the course of servicing. The City is not liable for damage to any improvements or plantings within an easement. The City will re-seed as necessary any bare or disturbed soil for erosion control purposes.
3) Small and medium shrubs, groundcovers, or grasses may be planted within an easement. Their suitability shall be determined by their likelihood to create or entrap debris, or to obstruct natural flow.
4) Small trees (under 30 feet in height at maturity) may be planted a minimum of 10 feet from the centerline of the closest pipeline within the easement or 10 feet from the center of the easement, whichever is greater. Small trees as defined above shall include redbuds, fringe tree, serviceberry, crape myrtle, golden raintree, hawthorne, hornbeam, saucer or star magnolia, sassafras, or smoke tree. Large trees shall not be placed within any City Utility easement.

3. Storm Inlet Design
   a. Drop inlets shall be sized and spaced such that a minimum of one half of the travel way in each direction shall be free from flooding at the inlet design flow.
   b. To properly drain sag vertical curves, it is required on roads classified as minor arterial or higher to place three inlets on each side of the road; one inlet at the low point and one flanking inlet on each side of the low point. The flanking inlets shall be placed so that they will limit the spread in the low gradient (flatter) approaches to the sag point and will act in relief of the sag inlet should it become clogged.
   c. Drainage flowing in street gutters shall be intercepted 100 percent, at design flow, prior to entering an intersection with another public street.
   d. Inlets which have bypass flows shall be clearly marked on the plans and bypass flow must be included in the total gutter flow contributing to the next downstream inlet.
   e. Design flow for drop inlets in streets and parking areas shall be computed using the rational method and applying a rainfall intensity of four inches per hour. Design flow for grate inlets located near structures that could be damaged by flooding shall be computed using the 100-year storm and assuming 50 percent blockage of the grate. Design flow for all other grate inlets shall be the same as street inlets but must assume 50 percent blockage.
4. Stormwater conveyance channels
   a. Channel adequacy, hydraulic capacity, maximum velocities, channel linings, and other related design variables shall be determined by the procedures outlined in Chapter 5 of the Virginia Erosion and Sediment Control Handbook, or by approved computer software.
   b. All open channels shall be designed to contain the 10-year storm with six inches of freeboard below the banks of the channel. Contributions of off-site flow from permanently developed properties shall be based upon existing conditions. Contributions of off-site flow from undeveloped properties shall be calculated based upon the two-year fully developed flow (undetained) from such properties. Plans shall account for overland relief resulting from less frequent events.
   c. Unless otherwise approved, the need, type, and dimensions of lining for erosion control shall be based on the velocity and depth of flow associated with the two-year event.
   d. Maximum side slope for grass lined conveyance channels shall be 3:1 (H:V)

with a minimum longitudinal slope of one percent (two percent recommended).

5. Stormwater Quantity and Quality
   a. For projects with a disturbed area greater than 5,000 square feet but less than 1.0 acre, and not part of a larger common plan of development, the following regulations shall be followed: State codes 9VAC25-840-40, 9VAC25-870-66, and Chapter 9 of Winchester City Code
   b. For projects with a disturbed area greater than 1.0 acre or that are part of a larger common plan of development which exceeds 1.0 acre, the following regulations shall be followed: State codes 9VAC25-870-65, 9VAC25-870-66, and Chapter 9 of the Winchester City Code. These projects shall apply for coverage under the State General VPDES Permit for Discharges of stormwater from construction activities. The City of Winchester will act as the VSMP authority.
   c. If the land development is in a watershed for which a hydrologic and/or hydraulic study has been conducted or a stormwater model develop, the program authority may modify the requirements of items a and b so that runoff from the land development is controlled in accordance with the findings in the study or model, or to prevent adverse watershed storm flow timing, channel degradation, and/or localized flooding problems.
   d. The program authority may also require that the plan include additional measures to address damaging conditions to downstream properties and receiving waterways caused by the land development.

D. Materials
1. Concrete Pipe
   a. Circular reinforced concrete culvert and storm sewer pipe shall be in accordance with ASTM C76 and be Class III minimum.
   b. Elliptical reinforced concrete culvert and storm sewer pipe shall be in accordance with ASTM C507.
   c. Gasketed joints shall be bell and spigot with rubber gasket seal in accordance with ASTM C443. Tongue and groove joints shall be sealed with mortar or pre-formed flexible sealant per ASTM C990, or other suitable sealant.
2. Corrugated Plastic Pipe
   a. Pipe shall be in accordance with AASHTO M294 or ASTM F2306.
   b. Pipe shall be joined using a bell and spigot joint meeting AASHTO M252, AASHTO M294, or ASTM F2306. The joint shall be soil-tight and gaskets, when applicable, shall meet the requirements of ASTM F477. Gaskets shall be installed by the pipe manufacturer and covered with a removable wrap to ensure the gasket is free from debris. A joint lubricant supplied by the manufacturer shall be used on the gasket and bell during assembly.
   c. Fittings shall conform to AASHTO M252, AASHTO M294 or ASTM F2306. Bell and spigot connections shall utilize a spun-on or welded bell and valley or saddle gasket meeting the soil-tight joint performance requirements of AASHTO M252, AASHTO M294 or ASTM F2306.
   d. All installation of corrugated plastic pipe shall be per the manufacturer's specifications.
3. Drop Inlets
   a. Standard drop inlets shall per the VDOT specifications.
   b. For drop inlets in shallow conditions, structures shall be consistent with Standard Detail SD-04 or shall be a precast or cast-in-place concrete box with

a top consistent with Standard Detail SD-05.

c. For drop inlets requiring a manhole frame and cover for access, the manhole frame and cover shall be as manufactured by Neenah Foundry per standard detail SD-06, or approved equal. Frames and cover shall be manufactured in the United States.

4. Manholes
   a. Storm manholes shall be per VDOT specifications.
   b. Frames and covers shall be as manufactured by Neenah Foundry per standard detail SD-03, or approved equal.

E. Inspection and Testing
1. Concrete Pipe
   a. Concrete pipe shall be inspected visually during installation.
   b. After installation and backfill, flush all sand, dirt, and debris from the lines prior to inspection.
   c. All lines and manholes shall be visually inspected by the City of Winchester from every manhole by use of cameras.
   d. The lines shall exhibit a fully circular pattern when viewed from one manhole to the next.
   e. Lines, which do not exhibit a true and correct line and grade, or have obstruction or structural defects, shall be corrected to meet these specifications and the barrel left clean for its entire length.
2. Corrugated Plastic Pipe
   a. Corrugated plastic pipe shall be inspected visually during installation.
   b. Following installation, the contractor shall perform cleaning and video inspection of the installed plastic pipe. The processes listed below shall be followed:
      1) The CCTV inspection must be completed per this manual and by an impartial, qualified and reputable Inspection Agency in the presence of a City inspector. The City reserves the right to reject an Inspection Agency.
      2) The Owner / Developer shall provide 48-hour notice to the City prior to televising any pipe to allow an inspector to be on site.
      3) A written inspection report accompanied by visual recording shall be provided to the City's Inspector at the end of each day of CCTV inspection. Visual recording shall be digital mpeg4 format. The written report shall be in both list form and plan view. NOTE: VHS video tapes will not be accepted.
      4) It will be the Developer/Contractor's responsibility to demonstrate acceptable joint spacing.
      5) Deflection visible on the CCTV monitor will be assumed to be greater than 5%. The Developer/Contractor has the right to challenge this decision by direct measurement or by the use of a GO-NO-GO Mandrel. The pipe will be rechecked for damage after use of the Mandrel.
      6) The Developer/Contractor must repair all defects found during inspection. A follow-up CCTV inspection shall also be performed by the Develop/Contractor to assure the repairs have been completed satisfactorily.

V. Cast-in-Place Concrete

A. General
1. The following minimum requirements are considered acceptable to the City of Winchester in the construction of sidewalks, curb and gutter. Deviation from these may be allowed if in accordance with sound engineering standards, and if the deviation will not increase the likelihood of a system failure or impact the level or service provided to the citizens and patrons of the City of Winchester.
2. Any concrete work performed in the City's right-of-way requires a permit obtained from and is subject to inspection by the Department of Public Services – Engineering Division.

B. System Design
1. Sidewalks
   a. Sidewalks must have a minimum clear path width of five feet. Additional width may be required based on the width of the adjoining sidewalk, anticipated pedestrian use, or character of the area.
   b. All sidewalk surfaces must be firm, stable, smooth and slip resistant when dry and must be free of surface gaps greater than ½-inch in width.
   c. The maximum cross slope for sidewalks shall be 2%.
   d. Sidewalks at a street or alley intersection must meet be equipped with ADA-compliant ramps.
2. Curb and gutter
   a. Curb and gutter shall be per VDOT standards CG-2 and CG-6.

C. Materials
1. Subbase Material
   a. Subbase materials shall be in conformance with VDOT Section 208, gradation size 21-A
2. Concrete
   a. Concrete shall be Portland Cement air-entrained Class A4 Low Permeability (4,000 psi) with natural sand unless otherwise approved in writing by the Department of Public Services. Additives such as anti-freeze and calcium chloride are prohibited.
3. Joint Filler
   a. Joint filler shall be ½" preformed asphalt expansion joint material conforming to ASTM D994 or ASTM D1751.
4. Concrete Sealer
   a. Sealer shall be Protectosil CHEM-TRETE 40 VOC by Evonik Industries or approved equal.
5. Rubber
   a. Rubber sidewalk shall be KBI Flexi-Pave HD2000. Color shall be "concrete" for sections where the sidewalk is concrete and "brick red" for sections where there is brick sidewalk.
6. Pavers
   a. Truncated dome pavers used in all handicap accessible ramps shall be Hanover Detectable Warning Pavers, 11 ¾ " x 11 ¾ " x 2", Red 15 color, Tudor finish, or approved equal.

7. Brick
    a. Brick sidewalks shall be constructed in the Historic District per standard details SW-2 and SW-3. Bricks shall be Pine Hall Brick Pavers, Color – Pathway Full Range, or approved equal.

D. Installation
1. Sidewalks and Entrances
    a. After sidewalks have been removed, the contractor shall pour replacement sidewalks within 48 hours, weather permitting.
    b. The contractor shall provide adequate access for abutting owners/tenants and shall keep all natural drainage unobstructed or provide equal courses effectively placed. The Contractor shall maintain access and drainage in such a manner to afford pedestrian access to houses or buildings.
    c. Any drain pipe that is under the sidewalk being replaced and is damaged, broken, or clogged, shall be replaced with SDR 35 or greater PVC pipe.
    d. Contractor shall provide concrete forms and pour the concrete in conformance with Section 504 of the VDOT specifications. Concrete shall not be poured until the forms have been inspected and approved by the Department of Public Services – Engineering Division.
    e. Grades shall be established by the contractor. The subgrade shall be constructed to a minimum of eight inches below the finished grade of the sidewalk. All soft and unsuitable materials shall be removed and replaced with suitable materials. The subgrade shall be compacted by approved methods until a smooth, hard and dense surface is obtained.
    f. Aggregate base shall be applied to a minimum of four inches thick on the subgrade, and shall be placed in conformance with Section 309 of the VDOT Specifications.
    g. The concrete for all sidewalks shall have a minimum thickness of four inches, except at driveways, where the minimum thickness shall be 7 inches. The stone subgrade shall be moistened prior to the placing of concrete.
    h. The depth of the sidewalk shall be as specified and shall not have a deficiency of more than one-quarter inch.
    i. All concrete sidewalks shall be constructed so as to drain to the curb on a minimum slope of one-quarter inch per foot or a maximum slope of one-half inch per foot.
    j. When wood forms are used, joints shall be constructed at intervals of 50 feet, except for closures, but a slab shall not be less than five feet in length. Slabs shall be separated by transverse premolded expansion joint filler for the full width of the slab, extending from the bottom of the slab to within one-quarter inch of its top surface. The slab between the expansion joints shall be divided into blocks 5 feet in length by scoring transversely. When slabs are more than seven feet in width, they shall be scored longitudinally to secure uniform blocks approximately square. Transverse and longitudinal scoring shall extend to at least one-third of the depth of the concrete slab. Scoring may be done with trowels, finishing and edging tools or by other approved means.
    k. Where sidewalks are constructed adjacent to permanent structures or other rigid construction on one side and curb on the other, an expansion joint of premolded material extending along both the structure and the

curb shall be placed for the full depth of the slab. A premolded expansion joint shall be placed between the sidewalk and adjacent sidewalk or curb at all intersections or crosswalks, both public and private. All premolded expansion joint filler shall be securely fastened to prevent displacement.

l. Where the sidewalk is constructed in conjunction with adjacent curb, the expansion joints in the curb and sidewalk shall coincide. Where such construction is adjacent to existing curb, the expansion joints shall, if practicable, coincide. Prior to placing concrete around any permanent structure, premolded expansion joint material shall be placed around such structure for the full depth of the sidewalk.
m. Finish concrete walks and driveways as specified in Section 404.19 of the VDOT Specifications.
n. Pedestrian traffic shall not be permitted to use the sidewalk for at least <u>three</u> days after the placing of the concrete. Vehicles shall not be permitted on the concrete until it has been in place for at least <u>seven</u> days, unless high early strength concrete is used.
o. Handicap ramps shall be installed in accordance with VDOT CG-12 curb ramp Specifications. The CG-12 floor ramp will consist of truncated dome pavers as specified below.
p. Flares of the CG-12 curb ramps will have a standard broom finish.

2. Curb and Gutters
   a. The subgrade shall be constructed to the required elevation below the finished surface of the gutter in accordance with dimensions and design as shown on VDOT Standards. Remove all soft and unsuitable material and replace with subbase material, which shall be compacted to 95% density in accordance with AASHTO-T-99 and finished to a smooth surface. Moisten the subbase prior to placing the concrete.
   b. Forms shall be constructed of wood or metal conforming to VDOT Section 403.03.
   c. Prior to placing concrete, check the line and grade for accuracy and fasten the face forms of the curb to the gutter forms. Spade the concrete and tamp sufficiently to bring the mortar to the surface, after which finish with a magnesium float. Construction shall be in sections of uniform lengths, providing transverse joints at approximately 10-feet intervals and when the time elapsing between placements exceeds 45 minutes. No section shall be less than 6 feet in length. Separate sections by plate steel templates set perpendicular to the grade and center line of the unit specified. The templates shall be 1/8 inch in thickness and shall have a width and depth equal to the unit cross-section. Leave these templates in place until the concrete has set sufficiently to hold its shape.
   d. Form expansion joints at intervals of 100 feet or less. When the curb and gutter is constructed adjacent to rigid pavements, the location and width of expansion joints shall coincide with those in the pavement, where practicable. Where stationary structures, such as catch basins and drop inlets, are within the limits of the curb and gutter, place an expansion joint between the structure and the curb and gutter. Place expansion joints at all returns.
   e. Screed the face and top of curb and surface of gutter smooth and round the edges to a radius as shown on the VDOT Standards.

f. As soon as the concrete has attained sufficient set, remove the face forms of the curb. The exposed surfaces shall be screeded with a straight edge and finished with a steel trowel. Remove all trowel marks with a brush wet with clear water. Do not use mortar in finishing.
g. The finished surface of curb and gutter shall be true to line and grade with an allowable tolerance as specified in Section 316.05 of the VDOT Specifications.
h. After the concrete has set, fill the spaces on both sides of the gutter or the back side of curb to the required elevation with suitable material and compact to 95% density in layers of not more than 6-inches.
i. The Contractor is responsible for the replacement of any pavement that is damaged and/or removed due to placement of curb and gutter. All patches shall be saw cut and patched according to the latest practices used in asphalt patching and as approved by the Department of Public Services.

3. Construction of Forms
   a. Construct wood forms of sound material, and of the correct shape and dimensions, constructed tightly and of sufficient strength. Brace and tie the forms together so that the movement of men, equipment, materials or placing and vibrating the concrete will not throw them out of line or position. Forms shall be strong enough to maintain their exact shape under all imposed loads.
   b. Use form ties of sufficient strength and in sufficient quantities to prevent spreading of the forms. Place ties at least 1 inch away from the finished surface of the concrete.
4. Preparation for Placing
   a. Remove water from excavations before concrete is deposited. Remove hardened concrete, debris, ice and other foreign materials from the interior of the forms and from the inner surfaces of mixing and conveying equipment. Do not place on frozen ground.
   b. Prior to the placing of any concrete, notify the Department of Public Services - Engineering Division so that proper inspection may be made.
5. Delivery
   a. Submit a delivery ticket indicating the date, time, ticket and load number, concrete class and design mix, quantity and location of placement. The delivery ticket shall be submitted to the Department of Public Services.
6. Placing Concrete
   a. Before placing concrete, remove all construction debris, water and ice from the places to be occupied by the concrete. Give particular attention to the removal of dirt and debris from all formed construction joints.
   b. Concrete, when deposited, shall have a temperature ranging between a minimum of 50 degrees Fahrenheit (F) and a maximum of 90 degrees F. When the temperature of the surrounding air is below 50 degrees or above 90 degrees F, concreting shall be done in accordance with the recommendations noted in ACI-306 and ACI-305 respectively.
   c. Mix concrete in such quantities as required for immediate use and place prior to loss of slump.
   d. Spade, work and vibrate concrete as it is being poured, to secure its maximum density, free from voids and completely filling the forms.

7. Removal of Forms
   a. After concrete has been placed, all forms, bracing and supports shall remain undisturbed long enough to allow the concrete to reach the strength necessary to support with safety its own weight plus any live load or pressure that might be placed upon it without causing excessive settlement or deflective or any temporary or permanent damage to the structure. Contractor shall prevent the breaking of edges and corners of concrete in the stripping of forms. Upon removal of formwork, immediately patch any honeycombed areas and other voids to the satisfaction of the Department of Public Services.
   b. Thoroughly clean forms before each reuse.
8. Protection of New Work
   a. Protect all freshly placed concrete from mechanical injury or action of the elements until such time as the concrete is thoroughly set.
9. Preformed Joints
   a. Furnish and install preformed expansion joint material at appropriate locations as described in Sections 1 and 2 of the Contract Documents.
   b. Tool the concrete edges at expansion or contraction joints to a 1/8-inch radius.
10. Finishing
    a. After screeding and floating, give concrete slabs a light steel trowelling to seal the surface and remove any irregularities left by the float. Just before the concrete becomes non-plastic, the surface of the concrete shall be given a fine broom finish perpendicular to the line of traffic and so executed that the corrugations thus produced will be uniform in character and width. The broomed surface shall be free from porous spots, irregularities, depressions, small pockets, and rough spots that may be caused by accidentally disturbing particles of coarse aggregate embedded near the surface.
11. Curing
    a. Curing shall be started as soon as it is possible to apply the curing medium without damaging the surface, preferably immediately upon completion of the finishing operation. At no time during the curing period shall the temperature of the concrete be permitted to drop below 40 degrees F.
12. Sealing
    a. Concrete must be allowed to cure for minimum of 28 days before applying sealer.
    b. Contractor shall follow manufacturer's instructions for application and coverage.
13. Defective Concrete
    a. Defective concrete is defined as concrete in place which does not conform to strength, shapes, alignment, appearance and/or elevations as required; areas which contain faulty surface areas and/or concrete surfaces not finished in accordance with these specifications.
    b. Remove all defective concrete and replace in a manner meeting with the approval of the Department of Public Services.

VI. Sign Installation

A. Sign Post and Anchor
   1. The City of Winchester signs will be placed on a 10', 12', or 14' by 2" square galvanized or black square quick punch 14 gauge posts.
      a. A black 2"x2" square galvanized post must be used in the Downtown Historic District and must be used on any of the City of Winchester Gateways.
   2. The sign post is required to have a matching pyramid rain cap on the top.
   3. The bottom edge of the sign is required to be a minimum of 7' off of the ground.
   4. The post will be anchored into the ground with a Telespar Anchor.
      a. The Telespar Anchor will be 2¼" x 2¼" square 12 gauge 36" long open hole anchors.
   5. The post will be bolted to the anchor with a 5/16" corner bolt.
   6. The anchor must be driven into the ground with a minimum of 5" sticking out of the ground.

B. Street Name Signs
   1. The City of Winchester requires street name signs on two opposite corners of an intersection.
   2. The City of Winchester requires the street name signs to be doubled on each post.

   3. The street name signs will be made with white 3m Diamond Grade DG3 Reflective Sheeting.
   4. The street names will be cut out of 3m Electrocut film.
      a. Green film must be used on all street name signs not located in the Downtown Historic District.
      b. Black film must be used on all street name signs located in the Downtown Historic District.
   5. The street name signs will be installed on .80 gauge aluminum with ½" corner radius.

a. The aluminum used for the signs will be 6”x12”, 6”x18”, 6”x24”, 6”x30”, or 6”x36”.

6. The street name will be 4” letters with the first letter capitalized.
7. The prefix and suffix will be 2” letters with a 2” vertical offset the letters will be capitalized.
8. The street name signs will be Highway C.
9. The signs will be attached to the post with a 3/8” drive rivet.
10. The signs will have a ½” border around the film.
11. Street name signs used on roadways with a speed greater than 35mph.
    a. The aluminum used for these signs will be 9”x12”, 9”x18”, 9”x24”, 9”x30”, or 9”x36” .8o gauge with ½” corner radius.
    b. The street name will be 6” letters.
    c. The prefix and suffix will be 3” letters with a 3” vertical offset the letters will be capitalized.

C. Stop Signs
1. The City of Winchester requires the Stop signs to be red 3m Electrocut film with 3m Diamond Grade DG3 Reflective Sheeting as the backing.
2. The Stop name sign will be Highway C font.
    a. The letters will be all capital letters
        1) The letters on a 30”x30” will be 10”.
        2) The letters on a 36”x36” will be 12”.
3. The City of Winchester requires the use of a 30”x30” Stop sign on roadways with speeds below 35mph.
4. The City of Winchester requires the use of a 36”x36” Stop sign on roadways with a speed greater that 35mph.
5. The border around the Stop sign will be ½”.
6. The Stop signs will have black 3m Electrocut film on the backs for any sign on black post.

D. Other signs
1. The City of Winchester requires all signs to be faced with 3m Diamond Grade DG3 reflective sheeting.
2. The City of Winchester requires all signs be at least 7’ from the ground or nearest side walk to the bottom edge of the sign.
3. All signs on a black post will have black 3m Electrocut film on the backs

VII. Marking Specifications

A. Material
   1. Thermoplastic required by the City of Winchester:
      The City of Winchester requires the use of Type B Class 1 Alkyd thermoplastic.
      a. The Thermoplastic must meet Federal Highway Administration and Virginia Department of Transportation specifications.
   2. Reflective glass beads
      a. Beads shall be manufactured from glass of a composition designed to be highly resistant to traffic wear and weather. Glass beads shall be spherical in shape and shall conform to AASHTO M247 Type 1, except that at least 80 percent of the beads shall be round when tested in accordance with the requirements of ASTM D 1155 Procedure B. Beads shall be essentially free of sharp angular particles, milkiness and surface scoring or scratching.
   3. The specified thermoplastic thickness of 90mils.

B. Arrows:
   1. The base of all arrows will be 12 feet
   2. The arrows will be MUTCD standard arrows pictured below

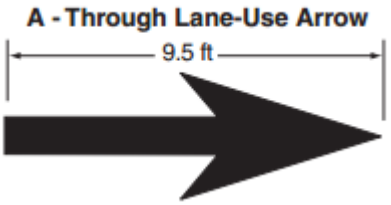

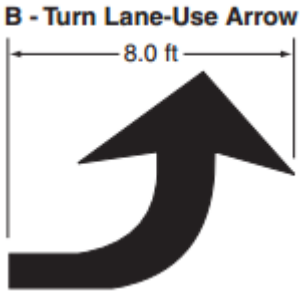

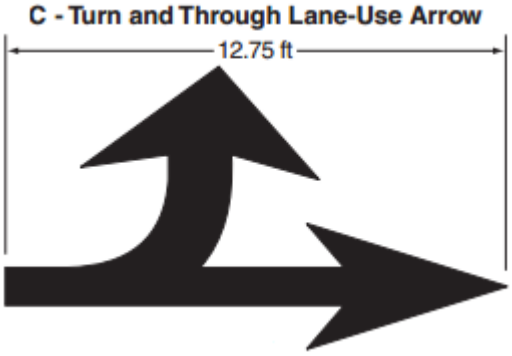

C. Crosswalks:
   1. Crosswalks will be 6ft outside to outside on secondary roads and 8ft outside to outside on main roads
   2. Crosswalk bars will be 12in lines 3ft on center spacing
   3. Crosswalk long lines will be 6in on 6ft crosswalks and 8in on 8ft crosswalks
   4. The crosswalk bars will run parallel with the roadway they are crossing

5. The crosswalk long lines will run the entire way across the roadway they are crossing
   a. The long lines may connect with another crosswalks long line
6. The crosswalk will be centered on the handicap ramp that it is servicing.

D. Stop bars:
   1. All Stop bars will be 24 inches solid lines

E. Paint:
   1. The City of Winchester requires the use of Type A water based paint.

VIII. Miscellaneous

A. Micro-trenching
   1. Micro-trenching may only be approved for “local streets” within the City. The City, however, reserves the right to deny any micro-trenching request on any local street. Permittee may request from the Public Works Department a list of all local streets within the City.
   2. Micro-trenching shall be located 2’ off the lip of gutter or shoulder of roadway where possible and shall only perpendicularly cross the street at no less than 300’ intervals.
   3. The City shall only approve the installation of two (2) micro-trench installations per local street. Such facilities shall be installed as follows:
      a. The first installation of micro-trench on any local street shall be installed as follows:
         1) 10” of cover (from uppermost conduit to existing top of pavement);
         2) 1.5” trench width backfilled with flowable fill to the existing top of pavement elevation;
         3) Sealed with minimum 6” wide patch of an approved asphaltic sealing material
      b. For the installation on a local street the micro-trench shall be installed as follows:
         1) Placed directly above existing conduit with 2” of separation, with a minimum of 6” of cover (from uppermost conduit to existing top of pavement);
         2) 1.5” trench width backfilled with flowable fill to existing top of pavement elevation;
         3) Sealed with a minimum 6” wide patch of an approved asphaltic sealing material;
   4. The micro-trenching shall not be located within 10 feet horizontally of any public utility asset (manhole, sewer line, water line fire hydrant, water meter, sewer lateral, storm inlet, storm line, etc.). The micro-trench may be removed to the lip of gutter in order to accommodate the 10 feet offset. If encroachment within 10’ is unavoidable this shall be clearly identified on the plan, and the City will review each occurrence on a case by case basis.
   5. Where the micro-trench crosses a public utility line, the angle shall not be less than 45 degrees;
   6. Do not micro-trenching or install conduit in parallel alignment above any publicly owned utility unless specifically approved in writing by the City.
   7. The submitted construction plans shall include a detail explaining the process by which the contractor will install conduits under the existing curb & gutter and sidewalk. The City will approve this detail on a case by case basis.
   8. All work and materials shall meet the requirements of current City of Winchester design and construction standards manual and VDOT specifications and standards unless noted otherwise or approved by the City of Winchester. Micro-trenching shall not be conducted in soils where raveling may occur.
   9. Pavement cuts shall be straight and clean. It is recommended that spalls and potholes within 12 inches of the micro-trench be repaired prior by trenching to facilitate straight pavement cuts. A circular vacuum or equivalent excavator which can be effectively evacuate cuttings shall be utilized.
   10. Materials and methods shall be approved by the City of Winchester prior to commencement of work. Trench location shall be through alignments otherwise approved by the City.

11. Cementitious backfill shall consist of approved shrinkage compensating high early strength repair mortar with corrosion inhibitor or approved equal to corbel trench fill produced by corbel communications industries, LLC. Backfill shall be properly consolidated to prevent formation of air pockets.
12. Backfill trench to top of pavement section. Crack sealer shall consist of approved materials or approved equal to Crafco specification SS-S-164 and ASTM D6690 (AASHTO M324), Type I, “Joint and Crack Sealants, Hot-Applied, for Concrete and Asphalt Pavements”. Crack sealer shall be applied according to manufactures recommendations or the requirements of the drawing, whichever is most stringent.
13. The sealant shall not be placed when the ambient or pavement temperatures fall below 45 degrees Fahrenheit or when moisture is present in the excavation to be sealed. Prior to sealing, the excavation shall be thoroughly cleaned such that all dirt, debris, moisture and other foreign materials that will prevent bonding of the sealant are removed. The sealant shall be pumped directly into or over the excavation from the heater-melter unit at the temperature specified by the manufacturer immediately following cleaning. The sealant shall overlay the crack at the pavement surface leaving maximum “over-banded” appearance of 3-inch wide (6-inch width total) on each side of the excavation centerline. The material shall not continue to flow beyond these limits once a crack is sealed. The height of the sealant above the pavement surface shall not exceed 1/8 inch.
14. Upon completion of micro-trenching, all grades, pavement markings, and structures shall be restored to existing conditions meeting applicable service requirements.
15. Contractor shall excavate on either side of the curb and gutter and jack conduits directly under the curb and gutter.
16. Contractor shall use standard trenching methods to place conduits beneath sidewalks. A 5-foot by 5-foot minimum sidewalk panel shall be replace at every crossing. Match existing sidewalk widths where required.

IX. As-built Drawing

A. General
   1. As-built drawings shall be submitted to the City of Winchester, Department of Public Services whenever the project involves a sanitary sewer, storm sewer or water main extension (either public or private).
   2. As-built drawings may be required even if the project includes only water or sewer services, if a substantial change from the approved plan occurs during the construction phase of the project.
   3. The developer is responsible for furnishing as-built drawings upon the completion of the sewer and water work.
   4. As-built drawings must be furnished to the City of Winchester prior to the acceptance of utilities into the City's system and bond release.
   5. As-built drawings shall show the building footprint (for site development plans) and the finished floor elevation.
   6. As-built drawing submittal shall include a copy of the final plat as recorded.
   7. As-built drawings need to include all the information in the approved plans, including standards and details, showing all changes made, together with all the following information:
      a. Project name and location description.
      b. North arrow and scale.
      c. Date construction plans approved.
      d. Date as-built drawings prepared and by whom.
      e. Registered Engineer's or Surveyor's certification stating that the completed facilities substantially comply with approved plans.
      f. Address and lot number on each lot.
      g. A table of as-built quantities for all city-owned utilities and associated structures and appurtenances, broken down by utility type, as well as size and material.
      h. Developer information including:
         1) Developer's corporate name.
         2) Primary contact.
         3) Mailing address.
         4) Telephone number.
      i. Design Engineer and/or Surveyor information including:
         1) Designer's corporate name.
         2) Mailing address.
         3) Telephone number.
         4) Virginia Registration number.
         5) Certification that the construction was completed in compliance with the Approved Construction Drawings.
      j. Contractor's information including:
         1) All contractor's that worked on the project.
         2) Field superintendents.
         3) Facilities constructed.
         4) Contractor's address.
         5) Contractor's telephone numbers.

B. Drawing Preparation Guidelines
   1. As-built drawings must show all field changes made to the approved drawings.
   2. No hand drawn or marked up construction plans will be accepted as as-built drawings.
   3. The term "As-built" is to be stamped in large clear print on the Plans. A professional engineer or licensed land surveyor shall certify the Plans as As-built drawings.
   4. The as-built drawings are to be submitted on 24" x 36" paper.

C. Drawing Submittal Guidelines
   1. The As-built Checklist (Appendix E) shall be completed and submitted with the drawings
   2. First submittal for review shall include one set of color drawings on 24” x 36” paper.
   3. Upon approval of the City engineer, final submittals shall include three sets of color drawings on 24” x 36” paper and a digital set of drawings in CAD per the digital drawing submittal guidelines below.

D. Digital Drawing Submittal Guidelines
   1. As-built drawings are to be submitted in digital format in the form of AutoCAD drawings, on a CD.
   2. All files shall be presented in AutoCAD format, either *.dwg or *.dxf files.
   3. All files shall be referenced to the closest control point provided on the control points list (see Appendix B). These control points are stored in NAD83 Virginia State Planes, North Zone and NAVD88 coordinate systems.
   4. Submitted *.dwg files should have multiple layers instead of one layer representing the entire drawing.
   5. Along with CAD files, if any ArcGIS files (including shapefiles, geodatabase) are available, those shall be submitted as well.

E. Water As-built Drawing Requirements
   1. All as-built water facilities shall be shown in blue.
   2. Water tap location for each lot, giving the point of connection to main line.
   3. All meter vaults and boxes shall be shown. Meter size(s) shall be shown on the plans.
   4. Plan and profile views for mains. Typical features that may be a part of a water main project include pipes, hydrants, blow offs, valves, fittings, structures, castings. Information that needs to appear on the as-built drawings for each of the aforementioned facilities includes finished grades (street and/or ground), quantities, material, public vs. private facilities.
   5. Easements with dimensions, identifying allowable use.
   6. Portions encased in concrete where crossing other pipes.

F. Sanitary Sewer As-Built Drawing Requirements
   1. All as-built sanitary sewer facilities shall be shown in green.
   2. Sanitary sewer lateral location for each lot, giving the point of connection to main line.
   3. Location of sanitary sewer cleanout.

4. Plan and profile views for sanitary sewers. Typical features that may be part of a sanitary sewer project include: pipes, structures (manholes), castings, pump stations, force mains. Information that needs to appear on the as-built drawings for each of the aforementioned facilities includes: rim and invert elevations, slopes, dimensions, quantities, materials, public vs. private facilities.
5. Easements with dimensions, identifying allowable use.

G. Storm System As-Built Drawing Requirements
1. All as-built storm sewer facilities shall be shown in red.
2. Plan and profile views for storm sewers. Typical features that may be part of a storm sewer project include: pipes, structures (manholes), castings. Information that needs to appear on the as-built drawings for each of the aforementioned facilities includes: rim and invert elevations, slopes, dimensions, quantities, materials, public vs. private facilities.
3. Easements with dimensions, identifying allowable use.
4. Profile, elevations along centerline of ditches.
5. For detention ponds, design and as-built stage storage calculations shall be provided to show that adequate capacity is available in the constructed pond.
6. For projects that were required to seek coverage under the state General VPDES Permit for discharges of stormwater from construction activity, the Stormwater Management Facilities Certification will need to be attached to record drawings.

H. Easements
1. All existing easements (those existing before plan submission) shall be shown, and labeled as such.
2. All existing easement reference information; Deed Book and Page or Instrument Number, shall be shown.
3. All new easements shall be shown, and labeled as such.
4. All Deeds of Easement for new easements must be submitted with as-builts.
5. All Deeds of Easement will be collected and the coordination concerning their organization and recordation performed by the City of Winchester's Public Property Coordinator (PPC).
6. All Deeds of Easement shall contain within the description:
    a. Tax Map Number
    b. Identifying property address (if available)
7. Signature pages of Deeds of Easement will be isolated.
8. All Deeds of Easement shall be accompanied by a certified corresponding plat depicting easement.
9. All plats will include a vicinity map.
10. All plats will include the property address or Tax Map Number in the title.
11. Deeds of Easement and plats must be signed by requesting parties before submission.
12. All Deeds of Easement, and corresponding plat, require City Attorney approval, signature and stamp (PPC).
13. After City Attorney approval, all Deeds of Easement, and corresponding plat, require City Manager approval and signature (PPC).

14. All Deeds of Easement granting the City of Winchester access or permissions will be recorded by the City of Winchester PPC.
15. A copy of the recorded Deeds of Easement, and corresponding plats, will be provided to the requesting party and City Attorney upon receipt by the City of Winchester PPC.

X. Project Acceptance of Work

A. Public Improvements
1. Substantial Completion
   a. A substantial completion for water and sewer will be issued when:
      1) All approved materials have been installed per the City's requirements
      2) The completed work has been inspected and the system is in working order. The City of Winchester reserves the right to reject all or any portion of the facilities if construction standards have not been met.
      3) The appropriate tests have been successfully completed.
      4) The sewer mains have been flushed and cleaned prior to videotaping.
      5) The video inspection of the project's sewer lines have been received and reviewed
      6) As-built information has been submitted to and approved by the Engineering Division of the Public Services Department. As-built information must be submitted in both paper and digital (AutoCAD) format. Information submitted shall include the project name and description, location, quantities of pipe, manholes, valves, hydrants, etc., and cost of facilities installed.
      7) A Deficiency and Omissions list has been issued to the Owner and Contractor. The Deficiency and Omissions list will be based on findings by the inspector when the Contractor has requested an inspection of the facilities. The inspection will include, but may not be limited to, the items noted on the checklist in Appendix A
   b. The Owner and Contractor shall be notified of substantial completion in writing.
2. Final Acceptance
   a. A project will be accepted when:
      1) The items on the Deficiency and Omissions list have been corrected.
      2) Any work that has was accepted at substantial completion, but later damaged, has been repaired.
      3) The City of Winchester Engineering Division of the Public Services Department has received a copy of the recorded easements with plats.
      4) As-built drawings have been submitted and approved.
      5) The Owner has formally dedicated the facilities to the City of Winchester and has requested the City to maintain said facilities.
      6) The Owner has completed and recorded an approved City of Winchester BMP Maintenance Agreement for any BMP facilities present on the site. The template for the agreement can be found in Appendix C.
   b. The Owner and Contractor will be notified of final acceptance in writing.
   c. Acceptance of all lines and appurtenances is subject to final inspection.
   d. Until a letter of final acceptance has been issued, all materials and workmanship are the responsibility of the Owner/Developer.
3. Warranty
   a. The Developer will be responsible for any maintenance as a result of construction or material defects of said facilities for one year from the date of final acceptance

B. Additional Conditions

1. Issuance of Land Disturbance Permit (for individual lots within a subdivision
   a. A Land Disturbance Permit is required for lots within a subdivision prior to issuance of a Building Permit.
   b. Prior to issuance of a Land Disturbance Permit for an individual lot within a subdivision, the following conditions must be met:
      1) Water mains must be installed, and must have passed both the hydrostatic and bacterial tests required in the City Standards. The main must be in service and the fire hydrants operational (note that services must be installed to the meter pit during testing).
      2) The sanitary sewer must be installed and must have passed the air test, the mandrel test and the television inspection required in the City Standards. Manholes must have passed the vacuum testing required.
      3) The storm sewer system must be completely installed and ready for inspection.
      4) The street must have curb and gutter, as well as driveway turnouts installed (if required by the approved plans). Backfill must be in place behind the curbing. The gravel base must be installed to the required depth and compacted to specifications. The roadway must be passable for emergency vehicles to access the properties.
      5) Gravel must be mounded up around manholes and valves and the structures must be marked otherwise to clearly show their locations.
      6) Erosion and sediment control measures shall be in place as required by the approved subdivision plans.
      7) Facility inspection must be complete (see Facility Inspection Checklist, Appendix D).
      8) As-built drawings must be submitted for review.
2. Release of water meters:
   a. Before water meters are released and set, the following conditions must be met:
      1) All conditions set forth in section A above, Issuance of Land Disturbance Permit, must be met. Exceptions may be made as set forth in Section 3-5 of the Subdivision Ordinance, Deferred Installment of Public Improvements.
      2) Streets must be surfaced with base-course asphalt.
      3) Lots must be at final grade.
      4) Sanitary lateral must pass city camera inspection.
      5) Sanitary cleanouts and water meter pits must be set at grade.
      6) A BMP maintenance agreement must be provided and recorded (see Appendix C).
      7) All items on punch list must be complete.

3. Issuance of Certificate of Occupancy

a. Before a certificate of occupancy is issued, the following conditions must be met:

1) All conditions set forth in section A, Issuance of Land Disturbance Permits, and section B, Release of Water Meters, must be met.
2) All public improvements must be complete, except for those covered in Section 3-5 of the Subdivision Ordinance, Deferred Installment of Public Improvements.
3) Lots must be stabilized.

SECTION XI- APPENDIX

APPENDIX A

HYDRANT TESTING PROCEDURE

CITY OF WINCHESTER PUBLIC SERVICES

FIRE HYDRANT TESTING INSTRUCTIONS

Test Procedure:

1. Choose two existing hydrants in the vicinity of the project. The one closest to the project site will be called hydrant “A” and the other called hydrant “B.”
2. Using City personnel to operate the hydrants place a pressure gauge on hydrant “B” and open the hydrant. Record the static pressure (in psi) for hydrant “B”. Close the hydrant and remove the gauge.
3. Place the pressure gauge on hydrant “A” and open the hydrant. Record the static pressure (in psi) for hydrant “A”. Close the hydrant, but do not remove the gauge.
4. Flow hydrant “B” and record the flowrate (in gpm) while concurrently opening hydrant “A” and reading the residual pressure measured on the pressure gauge. Record both the flowrate of hydrant “B” and the residual pressure at hydrant “A”. Close the hydrants and remove the gauge.
5. Using the following equation and the test data obtained, calculate the flowrate at hydrant “B” at a 20 psi residual pressure.

$$Q_2 = Q_1 \frac{(S - R_2)^{0.54}}{(S - R_1)^{0.54}}$$

where Q_1 = flowrate at hydrant “B”
Q_2 = calculated flowrate at 20 psi residual
S = average of the two static pressure readings
R_1 = residual pressure reading at hydrant “A”
R_2 = 20 psi

CITY OF WINCHESTER PUBLIC SERVICES

FIRE HYDRANT TESTING DATA SHEET

Date of test	
Name/organization of person performing test	
Fire hydrant “A” location	
Fire hydrant “B” location	
Hydrant “A” Static pressure (psi)	
Hydrant “B” Static pressure (psi)	
Hydrant “B” flowrate (gpm)	
Hydrant “A” Residual pressure (psi)	

Pressure conversion calculations:

$$Q_2 = Q_1 \frac{(S - R_2)^{0.54}}{(S - R_1)^{0.54}}$$

where Q_1 = flowrate at hydrant “B”
Q_2 = calculated flowrate at 20 psi residual
S = average of the two static pressure readings
R_1 = residual pressure reading at hydrant “A”
R_2 = 20 psi

The hydrant “B” flowrate at 20 psi residual pressure is _____ gpm.

APPENDIX B

DIGITAL DRAWING CONTROL POINTS

Ground Control Points

Ground control points for the City of Winchester, Virginia consists of twenty-four (24) horizontal/vertical points with only three (3) being vertical points. The control point coordinates are NAD83 Virginia State Planes, North Zone and NAVD88.

STATION NAME	NAD83 (FT) NORTHING (VA NORTH)	NAD83 (FT) EASTING (VA NORTH)	NAVD83 (FT) VERTICAL ELEVATION	DESCRIPTON
SEC2	7091437.533	11570363.591	752.04	PANEL-IRON PIN-STEPHENS CITY 2
V001			741.42	END OF GUIDE RAIL
V002	7092905.034	11565787.342	795.74	CORNER CONCRETE & PAVEMENT
V003	7099807.691	11565521.761	811.28	CORNER PARKING LOT
V004	7098284.779	11569846.964	753.82	CORNER SIDEWALK
V005	7099122.529	11575616.794	743.05	S.E. CORNER CONCRETE PAD
V006	7105292.075	11562613.294	807.44	FENCE CORNER
V007	7106226.773	11568840.924	806.32	CORNER CONCRETE & PAVEMENT
V008	7106543.286	11572129.841	750.18	CORNER CONCRETE & PAVEMENT
V009	7105238.620	11581431.041	714.53	CORNER CONCRETE & PAVEMENT
V010			714.02	EDGE OF ROAD OPPOSITE OF GATE POST
V011	7117167.856	11564458.581	859.40	CORNER PAVEMENT & CONCRETE
V012	7116818.946	11567138.648	805.36	CORNER CONCRETE SIDEWALK
V013	7116590.620	11572845.431	772.01	CORNER CONCRETE SIDEWALK
V014	7115665.288	11577539.786	718.29	CORNER SIDEWALK CHANGE
V015	7119945.398	11582172.716	701.72	CORNER CONCRETE SLAB
V016	7120122.125	11586131.832	695.60	CORNER END CONCRETE SIDEWALK
V017			866.21	BASE OF CORNER FENCE /GATE POST
V018	7126623.859	11567193.093	874.73	N.E. CORNER OF STONEWALL
V019	7126641.484	11573856.564	830.27	CORNER PARKING LOT
V020	7127282.596	11576642.241	765.95	N.E. CORNER CONCRETE PAD
V021	7126910.522	11582466.313	713.52	CORNER CONCRETE CURB APRON
WIN1	7112482.453	11586551.918	664.56	PANEL-IRON PIN WINCHESTER 1
WIN2	7127296.368	11586730.436	702.49	PANEL-IRON PIN WINCHESTER 2
WIN3	7127360.257	11564080.104	848.36	PANEL-IRON PIN WINCHESTER 3
WIN4	7095385.741	11563105.266	782.94	PANEL-IRON PIN WINCHESTER 4
WIN5	7107419.678	11576832.739	694.59	PANEL-IRON PIN WINCHESTER 5

APPENDIX C

STORMWATER/BMP MAINTENANCE AGREEMENT

STORMWATER MANAGEMENT/BMP FACILITIES MAINTENANCE AGREEMENT

THIS AGREEMENT, made and entered into this ___ day of _____, 20___, by and between _____ (insert full name of Owner) hereinafter called the "Landowner", and the City Council of the City of Winchester, Virginia, hereinafter call the "City."

WITNESSETH, that

WHEREAS, the Landowner is the owner of certain real property described at _____ (insert City of Winchester tax map/parcel identification number) as recorded by deed in the land records of the City of Winchester, Virginia as Deed Book _____, Page ___, hereinafter called the "Property";

WHEREAS, the Landowner is proceeding to build on and develop the property; and

WHEREAS, the Site Plan/Subdivision Plan known as _____ (insert name of plan), hereinafter called the "Plan", which is expressly made a part hereof, as approved or to be approved by the City, provides for detention of stormwater within the confines of the property; and

WHEREAS, the City and the Landowner, its successors and assigns, including any homeowners association, agree that the health, safety, and welfare of the residents of the City of Winchester, Virginia, require that on-site stormwater management/BMP facilities be constructed and maintained on the Property; and

WHEREAS, the City requires that on-site stormwater management/BMP facilities as shown on the Plan be constructed and adequately maintained by the Landowner, its successors and assigns, including any homeowners association.

NOW, THEREFORE, in consideration of the foregoing premises, the mutual covenants contained herein, and the following terms and conditions, the parties hereto agree as follows;

1. The on-site stormwater management/BMP facilities shall be constructed by the Landowner, its successors and assigns, in accordance with the plans and specifications identified in the Plan.

2. The Landowner, its successors and assigns, including any homeowners association, shall adequately maintain the stormwater management/BMP facilities. This includes all pipes and channels built to convey stormwater to the facility, as well as all structures, improvements, and vegetation provided to control the quantity and quality of the stormwater. Adequate maintenance is herein defined as good working condition so that these facilities are performing their design functions. The Annual Inspection report form is to be used to establish what good working condition is acceptable to the City.

3. The Landowner, its successors and assigns, shall inspect the stormwater management/BMP facility and submit an inspection report annually. The purpose of the inspection is to assure safe and proper functioning of the facilities. The inspection report shall cover the entire facilities, berms, outlet structure, pond areas, access roads, etc. Deficiencies shall be noted in the inspection report.

4. The Landowner, its successors and assigns, hereby grant permission to the City, its authorized agents and employees, to enter upon the Property and to inspect the stormwater management/BMP facilities

whenever the City deems necessary. The purpose of inspection is to follow-up on reported deficiencies and/or to respond to citizen complaints. The City shall provide the Landowner, its successors and assigns, copies of the inspection findings and a directive to commence with the repairs if necessary.

5. In the event the Landowner, its successors and assigns, fails to maintain the stormwater management/BMP facilities in good working condition acceptable to the City, the City may enter upon the Property and take whatever steps necessary to correct deficiencies identified in the inspection report and to charge the costs of such repairs to the Landowner, its successors and assigns. This provision shall not be construed to allow the City to erect any structure of permanent nature on the land of the Landowner outside of the easement for the stormwater management/BMP facilities. It is expressly understood and agreed that the City is under no obligation to routinely maintain or repair said facilities, and in no event shall this Agreement be construed to impose any such obligation on the City.

6. The Landowner, its successors and assigns, will perform the work necessary to keep these facilities in good working order as appropriate. In the event a maintenance schedule for the stormwater management/BMP facilities (including sediment removal) is outlined on the approved plans, the schedule will be followed.

7. In the event the City pursuant to the Agreement, performs work of any nature, or expends any funds in performance of said work for labor, use of equipment, supplies, materials, and the like, the Landowner, its successors and assigns, shall reimburse the City upon demand, within thirty (30) days of receipt thereof for all actual costs incurred by the City hereunder.

8. This Agreement imposes no liability of any kind whatsoever on the City and the Landowner agrees to hold the City harmless from any liability in the event the stormwater management/BMP facilities fail to operate properly.

9. This Agreement shall be recorded among the land records of the City of Winchester, Virginia, and shall constitute a covenant running with the land, and shall be binding on the Landowner, its administrators, executors, assigns, heirs and any other successors in interests, including any homeowners association.

10. This agreement shall be governed by the laws of the Commonwealth of Virginia.

11. Any disputes arising from or as a result of this Agreement shall be resolved in the Circuit Court for the City of Winchester, Virginia or the Fourth Circuit Federal District Court in Harrisonburg

12. If any provision of this Agreement is found to be illegal, invalid, or unenforceable, that shall not affect the validity or enforceability of any other provision of this agreement.

_____

Company/Corporation/Partnership Name (Seal)

By: _____

_____

(Type Name)

_____

(Type Title)

STATE OF _____CITY OF _____

The foregoing Agreement was acknowledged before me this _____ day of _____, 20___, by _____. My Commission Expires: _____

NOTARY PUBLIC

CITY OF WINCHESTER, VIRGINIA

By: _____

_____

(Type Name)

_____

(Type Title)

STATE OF _____CITY OF _____

The foregoing Agreement was acknowledged before me this _____ day of _____, 20___, by _____. My Commission Expires: _____

NOTARY PUBLIC

Approved as to form:_____

City Attorney

APPENDIX D

FACILITY INSPECTION CHECKLIST

Rouss City Hall
15 North Cameron Street
Winchester, VA 22601

Telephone: (540) 667-1815
Fax: (540) 662-3351
TDD: (540) 722-0782
Website: www.winchesterva.gov

Facilities Inpection Checklist

Project Name:_____ **Project Number:**_____

<u>Engineering</u>

Inspector(s):_____
Date of Inspection: _____

⌋ Onsite grading in accordance with site grading plan

_____

_____

⌋ Site must be stabilized

- Sites other than single family homes must be seeded and straw at a minimum
- Single family homes must be 95% green or winter waiver posted between Nov 15th and Apr 1st

_____

_____

⌋ Temporary erosion and sediment controls have been removed

_____

_____

⌋ City-owned storm sewers are clean and functional- TV inspection required

_____

_____

⌋ Street and site area are clean and free of mud and construction debris

_____

_____

⌋ All storm inlets and manholes must be clean and have parged flumes and tops

_____

_____

⌋ Storm inlet lengths match design plans

_____

_____

⌋ End sections and permanent outlet protection as required

_____

_____

⌋ Storm manhole covers (for public storm system) should be City standard stamped covers

_____

_____

⌋ Stormwater BMPs must be certificated by an appropriate party (sites ≥ 1 acre)

_____

_____

⌋ VSMP Permit Termination Form submitted (sites ≥ 1 acre)

_____

_____

⌋ As-built of storm system submitted for review and approval

- Public storm only for sites under 1 acre
- Entire storm system for sites 1 acre or greater

_____

_____

⌋ Other

_____

_____

_____

_____

Utilities

Inspector(s):_____

Date of Inspection: _____

⌋ Water meter(s) must be set (no service on bypass)

_____

_____

⌋ Water meter box condition (clean, setting at correct depth, traffic rated lid of necessary)

_____

_____

⌋ Water valves condition (unbroken, workable, correct stem depth, skid pads)

_____

_____

⌋ Water main testing complete and passed

_____

_____

⌋ Water mains installed and operational

_____

_____

⌋ Fire hydrants are installed and operational, correct height for breakable flange

_____

_____

⌋ Sanitary sewer main testing complete and passed

_____

_____

⌋ Sanitary sewer sewers are clean and functional- TV inspection required

_____

_____

⌋ All sanitary manholes must be clean and have parged inverts and tops

_____

_____

⌋ Sanitary manhole covers (for public sanitary system) should be City standard stamped covers

_____

_____

⌋ Sanitary cleanouts condition (unbroken, traffic rated lids where necessary)

_____

_____

⌋ As-built for water and sewer systems must be submitted for review and approval

_____

_____

⌋ Other

_____

_____

_____

_____

Public Works

Inspector(s):_____
Date of Inspection: _____

⌋ Pavement installed in public roadways as delineated on the approved plan and free from defects

_____

_____

⌋ Public traffic signals and street lights are installed and working

_____

_____

⌋ Sidewalks/trails and entrances in the ROW or public easements must be installed correctly and free from defects (cracks or otherwise)

_____

_____

- ⌋ Striping on City street modifications and new City streets per city standards

  _____

  _____

- ⌋ Street signs and traffic signs installed per City standards

  _____

  _____

- ⌋ Other

  _____

  _____

  _____

  _____

APPENDIX E

AS-BUILT CHECKLIST

CITY OF WINCHESTER
PUBLIC SERVICES DEPARTMENT
AS-BUILT DRAWINGS CHECKLIST

Site Plan Number: _____ Project Name: _____

Developer: _____

Primary Contact: _____

Mailing Address: _____

Phone Number: _____

Contractor: _____

Primary Contact: _____

Mailing Address: _____

Phone number: _____

Surveyor/Engineer: _____

Primary Contact: _____

Mailing Address: _____

Phone Number: _____

Please ensure that all of the following items are included before submission of As-built Drawings.

1. GENERAL

- ☐ Project name and location description
- ☐ North arrow and scale
- ☐ Date construction plans approved
- ☐ Date as-built drawings prepared and by whom
- ☐ Registered Engineer's or Surveyor's certification stating that the completed facilities substantially comply with approved plans
- ☐ Address and lot number on each lot
- ☐ As-built quantities for all city-owned utilities template
- ☐ A copy of final plat and deed of easement

2. DEVELOPER/DESIGN ENGINEER/SURVEYOR INFORMATION

- ☐ Corporate name
- ☐ Primary contact
- ☐ Mailing address
- ☐ Phone number
- ☐ Certification that the construction was completed in compliance with the Approved Construction Drawings

3. CONTRACTOR INFORMATION
   - ☐ All contractor's that worked on the project
   - ☐ Field superintendents
   - ☐ Facilities constructed
   - ☐ Contractor's address
   - ☐ Contractor's telephone numbers

4. WATER
   - ☐ All water facilities shall be shown in blue
   - ☐ Water tap location for each lot and point of connection to main line
   - ☐ All meter vaults and boxes should be shown with sizes
   - ☐ Plan and profile views for mains.
   - ☐ Easements with dimensions

5. SANITARY SEWER
   - ☐ All sanitary sewer facilities shall be shown in green
   - ☐ Lateral location for each lot and point of connection to main line
   - ☐ Location of cleanout
   - ☐ Plan and profile views
   - ☐ Easements with dimensions

6. STORMWATER SEWER
   - ☐ All as-built storm sewer facilities shall be shown in red
   - ☐ Plan and profile views
   - ☐ Easements with dimensions
   - ☐ Profile, elevations along centerline of ditches
   - ☐ Storage calculations for detention ponds
   - ☐ Stormwater Management Facilities Certification attached (for state General VPDES projects only)

CITY OF WINCHESTER
PUBLIC SERVICES DEPARTMENT
AS-BUILT TABLE TEMPLATE

SANITARY SEWER				
8” Main (LF)	10” Main (LF)	12” Main (LF)	Other Size (Please Specify)	Manholes (EA)

WATER MAINS					
6” Main (LF)	8” Main (LF)	10” Main (LF)	12’ Main (LF)	Other Size (Please Specify)	Fire Hydrants (EA)
WATER VALVES					
6” Valve (EA)	8” Valve (EA)	10” Valve (EA)	12” Valve (EA)	Other Size (Please specify)	

STORM SEWER							
15” Main (LF)	18” Main (LF)	21” Main (LF)	24” Main (LF)	30” Main (LF)	36” Main (LF)	Number of Structures	BMPs

SECTION XII- STANDARD DETAILS

CITY OF WINCHESTER, VA
DEPARTMENT OF PUBLIC UTILITIES

TYPICAL METER SETTING INCLUDES:

5/8" X 3/4" METER SUPPLIED BY THE CITY OF WINCHESTER
YOKE INLET VALVE – FORD MODEL BA94–323WL NL
YOKE OUTLET VALVE – FORD MODEL HHCA94–323TV
YOKE BARS – FORD Y502
CORPORATION STOP – FORD 3/4" MODEL FB1000
METER BOX COVER – A.Y. McDONALD MODEL 74M32ARG
METER BOX – 18"X30" HDPE

ALL BACKFILL MATERIAL FOR METER SETTINGS WILL BE EITHER 21A STONE OR CLEAN DIRT. #57 STONE WILL ONLY BE IN THE BOTTOM
THE METER SHALL BE FURNISHED BY THE DEPARTMENT OF UTILITIES

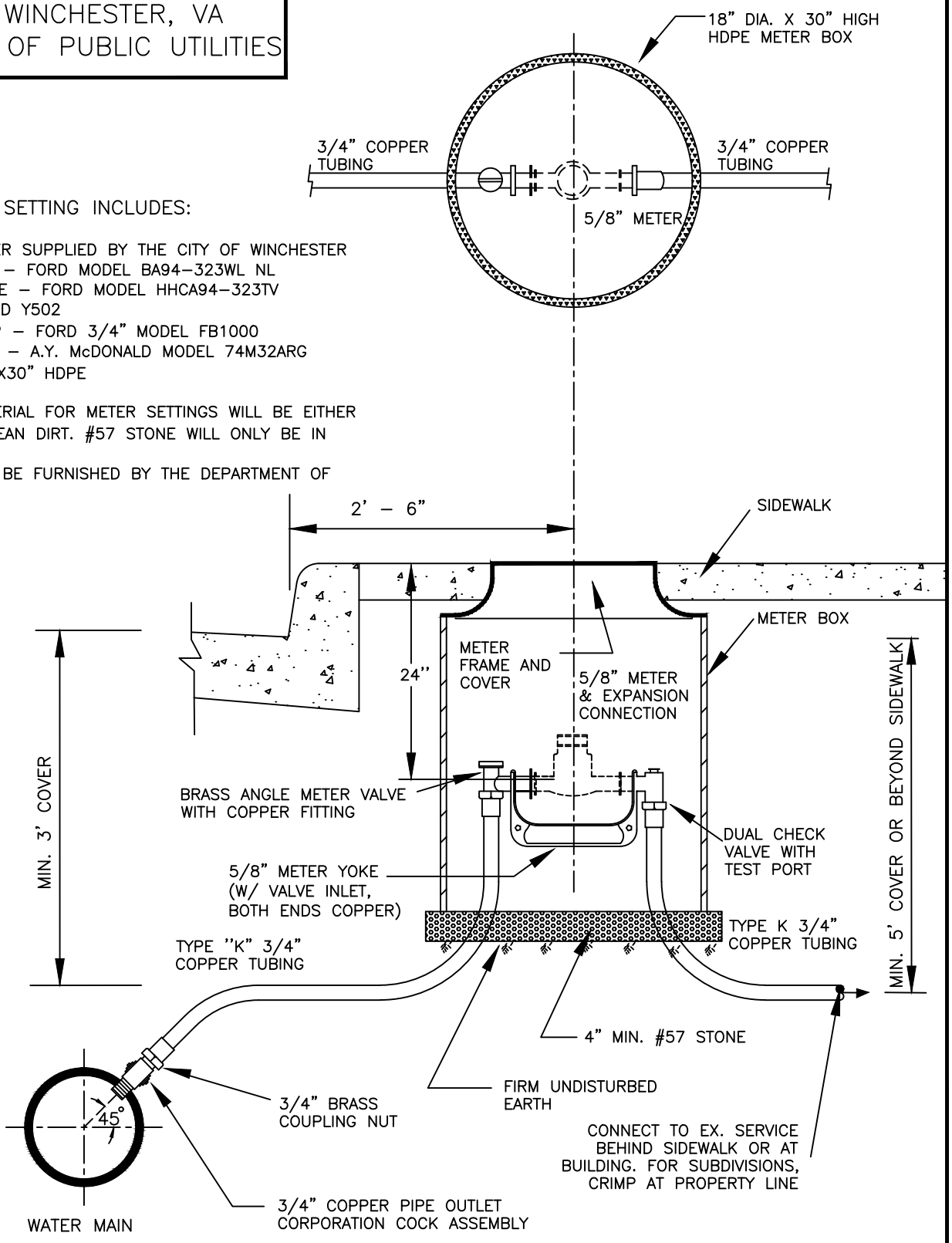

STANDARD DETAIL NO. WD–1	TYPICAL RESIDENTIAL WATER SERVICE 5/8" X 3/4" SCALE: NONE	DATE: 01/2020

CITY OF WINCHESTER, VA
DEPARTMENT OF PUBLIC UTILITIES

TYPICAL METER SETTING INCLUDES:

1 – "U" BRANCH FORD MODEL U48–437.5
2 – 5/8" X 3/4" METERS SUPPLIED BY THE CITY OF WINCHESTER
YOKE INLET VALVE – FORD MODEL BA91–323W–NL
YOKE OUTLET VALVE – FORD MODEL HHCA94–323TV
YOKE BARS – FORD Y502
CORPORATION STOP – FORD 1" MODEL FB1000
METER BOX COVER – A.Y. McDONALD MODEL 74M32ARG
METER BOX – 18"X22"X30"H HDPE BULLET BOX

ALL BACKFILL MATERIAL FOR METER SETTINGS WILL BE EITHER 21A STONE OR CLEAN DIRT. #57 STONE WILL ONLY BE IN THE BOTTOM
THE METER SHALL BE FURNISHED BY THE DEPARTMENT OF UTILITIES

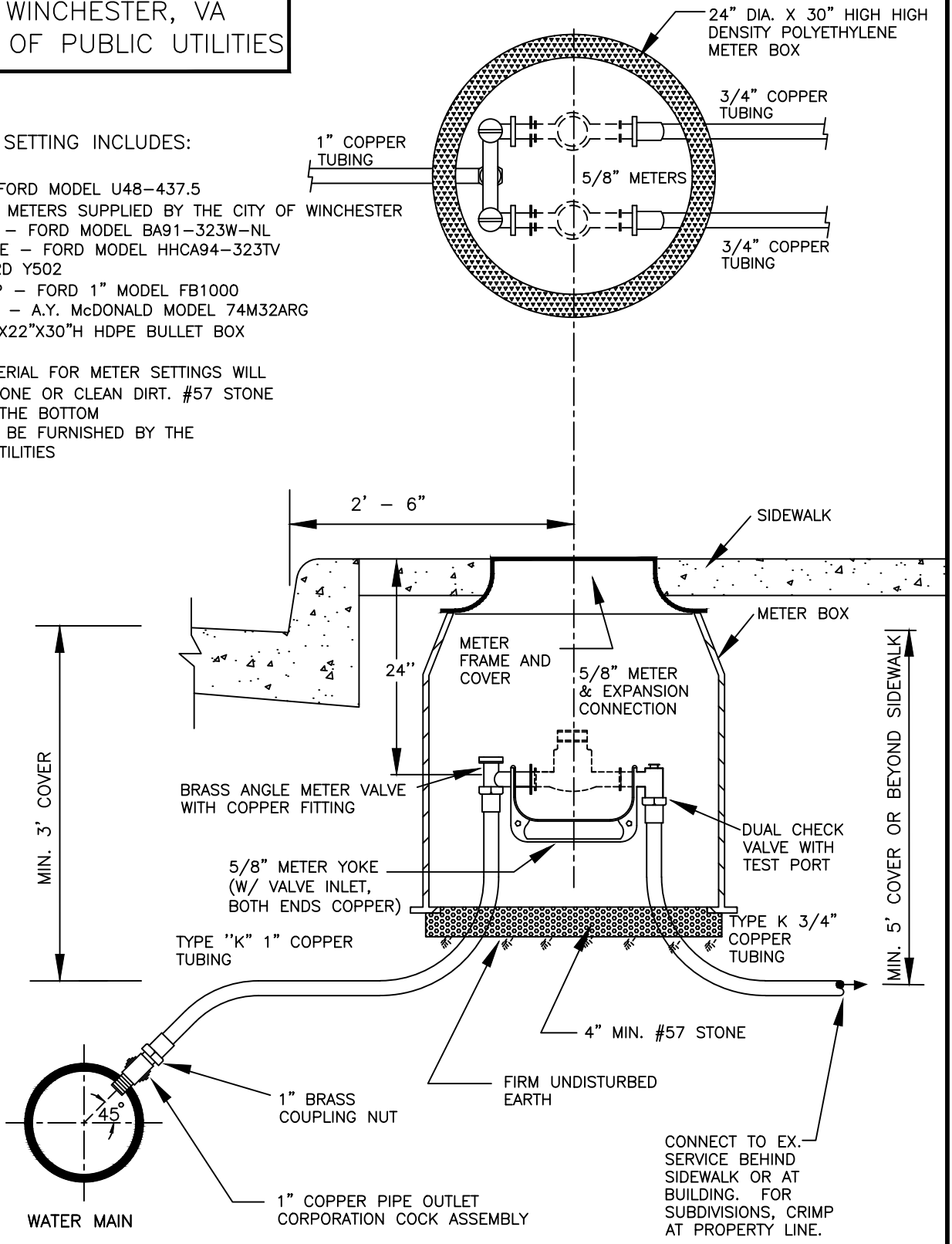

STANDARD DETAIL NO. WD–2	TYPICAL RESIDENTIAL WATER SERVICE TWIN SETTING 5/8"X3/4" SCALE: NONE	DATE: 01/2020

CITY OF WINCHESTER, VA
DEPARTMENT OF PUBLIC UTILITIES

TYPICAL METER SETTING INCLUDES:

1" METER SUPPLIED BY THE CITY OF WINCHESTER
YOKE INLET VALVE – FORD MODEL BA94–444W–NL
YOKE OUTLET VALVE – FORD MODEL HHCA94–444TV
YOKE BARS – FORD Y504
CORPORATION STOP – FORD 1" MODEL FB600
METER BOX COVER – 20" FRAME AND COVER A.Y. McDONALD MODEL 74M4ARG
METER BOX – 20"X22"X30" H #00202001
ALL BACKFILL MATERIAL FOR METER SETTINGS WILL BE EITHER 21A STONE OR CLEAN DIRT. #57 STONE WILL ONLY BE IN THE BOTTOM.
THE METER SHALL BE FURNISHED BY THE DEPARTMENT OF PUBLIC UTILITIES.

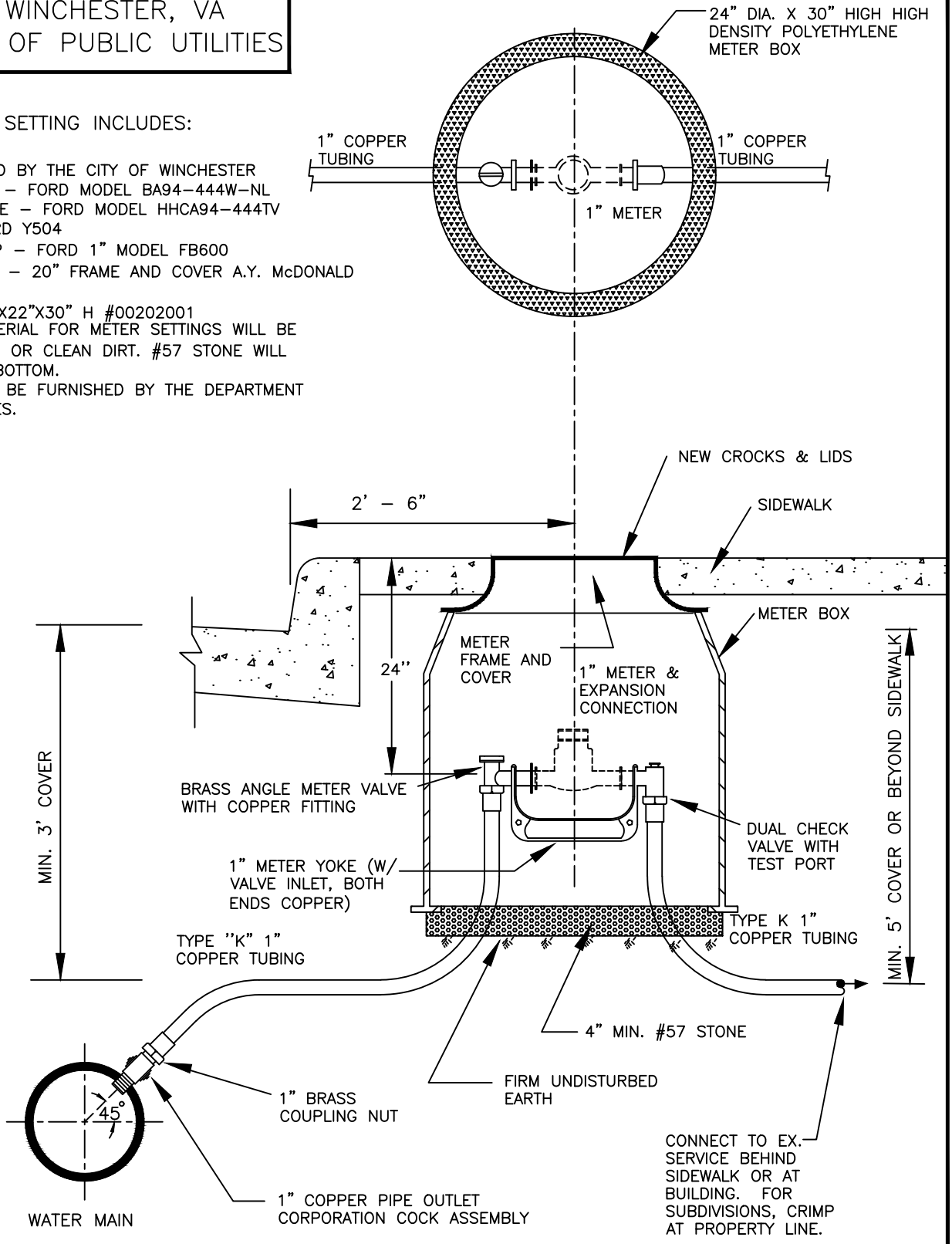

STANDARD DETAIL NO. WD–3	TYPICAL 1 INCH WATER SERVICE SCALE: NONE	DATE: 01/2020

CITY OF WINCHESTER, VA
DEPARTMENT OF PUBLIC UTILITIES

* 2'' FORD COPPERSETTER MODEL # VBHH77-15BHC-11-77

* 1-1/2" FORD: SAME LAYING DISTANCE AS 2'' WITH ONE PAIR OF 2'' x 1-1/2" METER ADAPTERS, FORD PART # A67 (FURNISHED BY CONTRACTOR)

* SET METER WIDTH TO 17". USE ADAPTERS FOR 1-1/2" METERS AS NECESSARY.

* METER SUPPLIED BY THE DEPARTMENT OF PUBLIC UTILITIES

* FLANGED ANGLE METER VALVE SHALL HAVE O-RING TYPE FLANGE METER SUPPORT BRACKETS

* BACK FLOW DEVICE REQUIRED AS SET FORTH IN CITY CROSS CONNECTION CONTROL PROGRAM

* BACKFLOW DEVICE WILL BE INSTALLED IN METER VAULT

* PRECAST VAULT AS MANUFACTURED BY WINCHESTER BUILDING SUPPLY OF WINCHESTER, VA OR APPROVED EQUAL

* CONNECT TO EX. SERVICE BEHIND SIDEWALK OR AT BUILDING
* THE METER SHALL BE FURNISHED BY THE DEPARTMENT OF PUBLIC UTILITIES

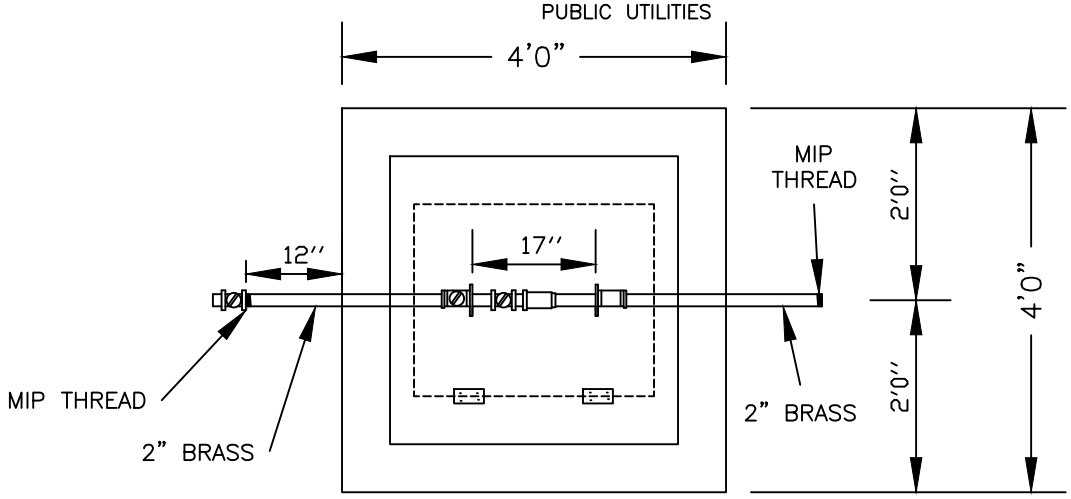

PLAN VIEW

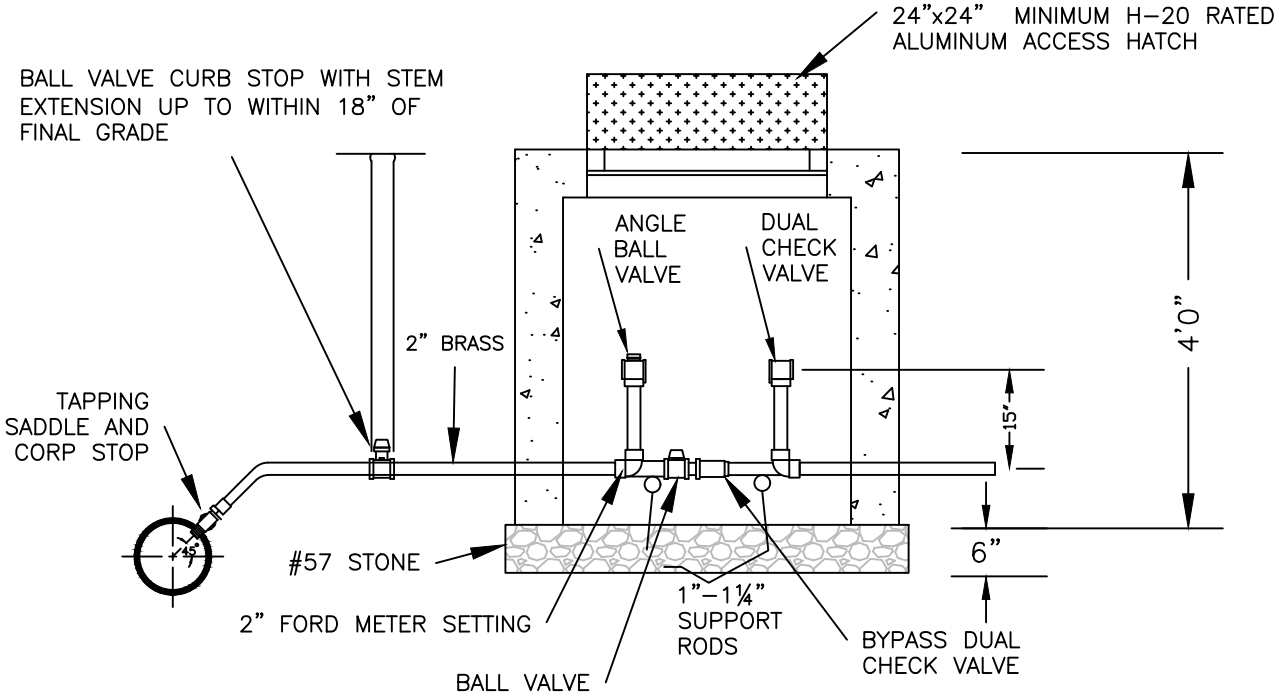

SECTION VIEW

STANDARD DETAIL NO. WD-4	1 ½" & 2" METER INSTALLATION SCALE: NONE	DATE: 01/2020

CITY OF WINCHESTER, VA
DEPARTMENT OF PUBLIC UTILITIES

1) PRECAST VAULT BY THE CLEAR FLOW CO. OF WAYNESBORO, VA OR APPROVED EQUAL.
2) 3" METER SHALL BE FURNISHED BY THE DEPARTMENT OF UTILITIES.
3) METER ABOVE 3" SHALL BE FURNISHED BY THE DEVELOPER AND APPROVED BY THE DEPARTMENT OF PUBLIC UTILITIES.
4) ALL FITTINGS SHALL BE MECHANICAL JOINT
5) SUBBASE UNDER THE VAULT SHALL BE A MINIMUM OF 6" VDOT #57 STONE.
6) METER SHALL BE SETTING IN 4" METER VAULT USING 4" DI PIPE

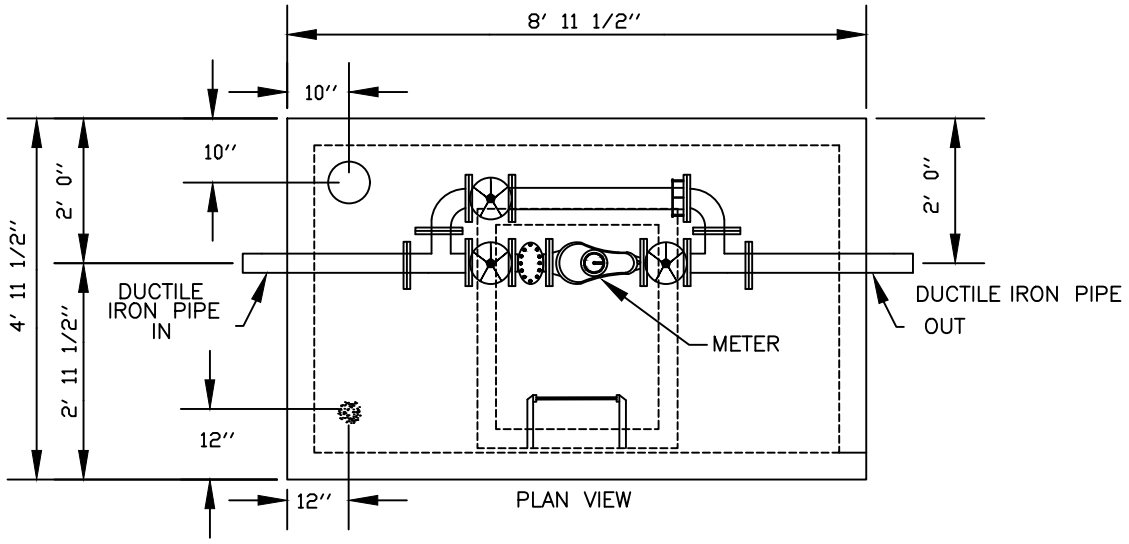

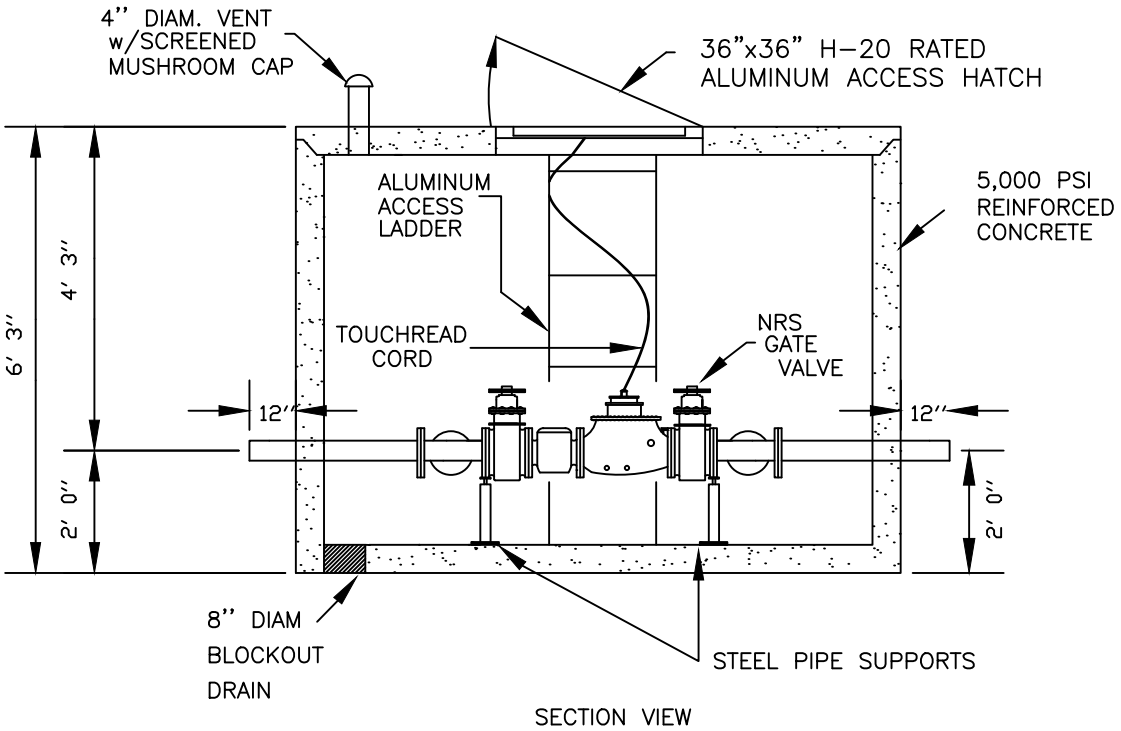

STANDARD DETAIL NO. WD-5	TYPICAL 3" AND LARGER COMPOUND METER SERVICE INSTALLATION AND VAULT DETAIL SCALE: NONE	DATE: 01/2020

CITY OF WINCHESTER, VA
DEPARTMENT OF PUBLIC UTILITIES

PRECAST VAULT BY THE CLEAR FLOW CO. OR APPROVED EQUAL. AMES DOUBLE DETECTOR CHECK W/ METERED BYPASS OR EQUAL. SUBBASE UNDER VAULT SHALL BE MINIMUM 6" VDOT #57 STONE.

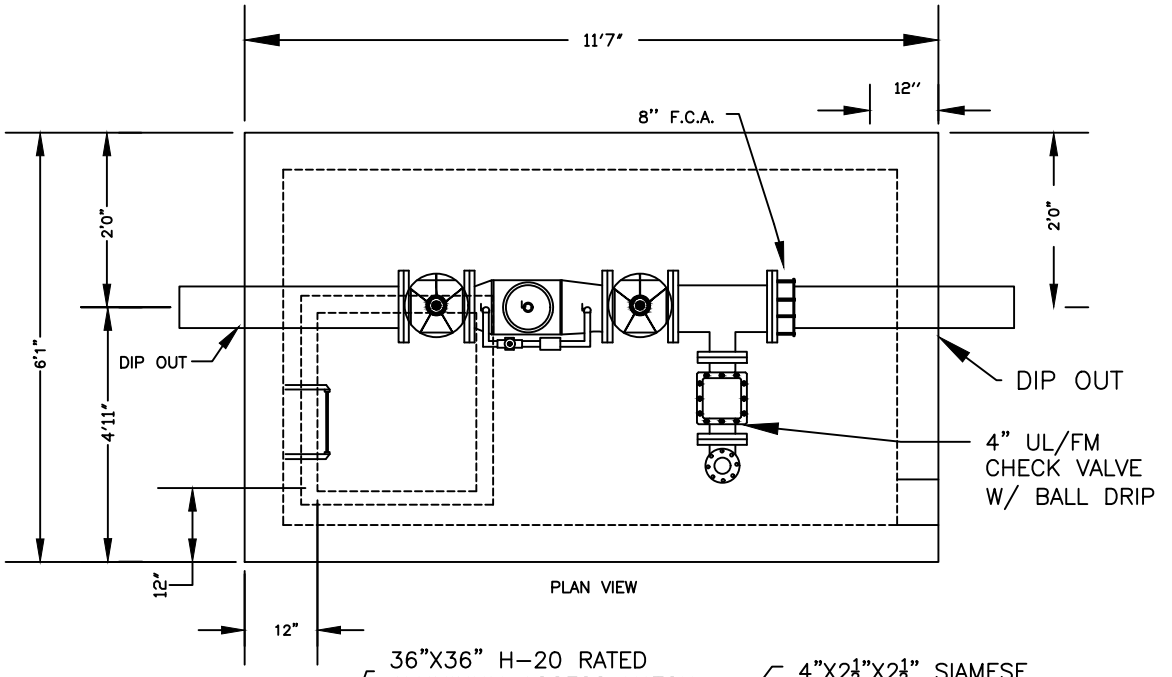

PLAN VIEW

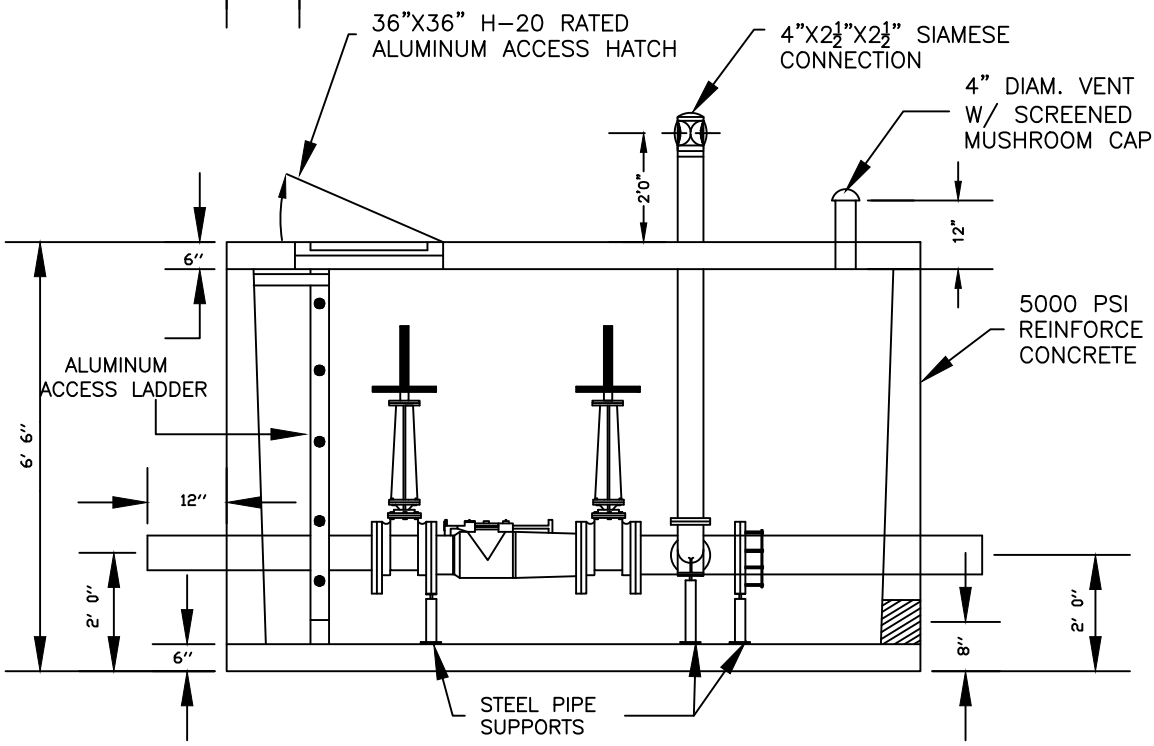

SECTION VIEW

STANDARD DETAIL NO. WD-6	FIRE LINE SERVICE INSTALLATION SCALE: NONE	DATE: 01/2020

CITY OF WINCHESTER, VA
DEPARTMENT OF PUBLIC UTILITIES

FIRE HYDRANT SHALL BE TRAFFIC MODEL
RESTRAINTS SHALL BE BY MEGA-LUG FLANGES
4-1/2" STREAMER NOZZLE SHALL FACE ROADWAY

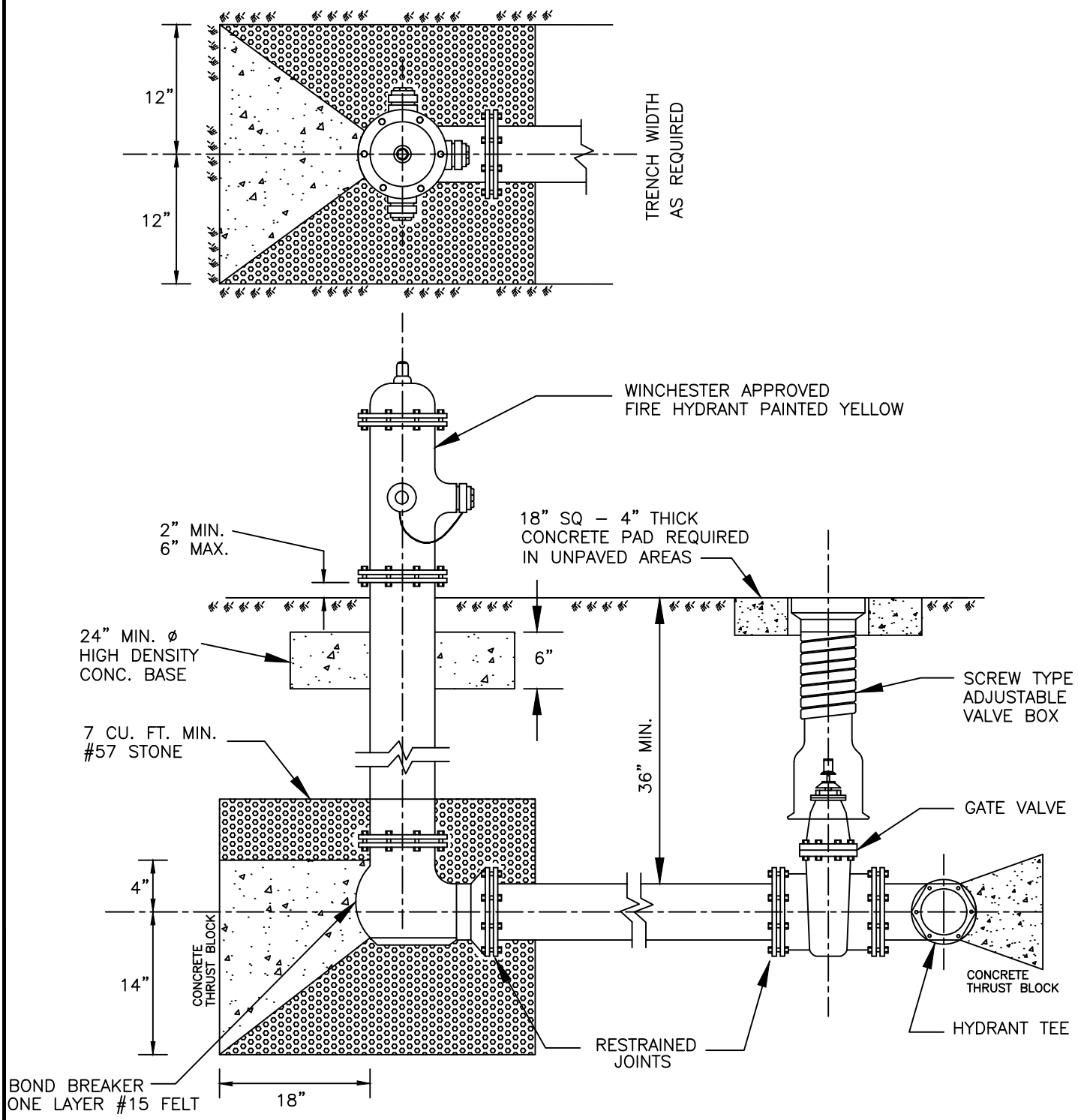

STANDARD DETAIL NO. WD-7	FIRE HYDRANT INSTALLATION SCALE: NONE	DATE: 01/2020

CITY OF WINCHESTER, VA
DEPARTMENT OF PUBLIC UTILITIES

TYPICAL RESILIENT SEAT VALVE INSTALLATION:

VALVE BOX AND BOOT SHALL BE CAST IRON
VALVE BOX COVER SHALL BE MARKED "WATER"
VALVE TOP SHALL BE FLUSH WITH FINISHED GRADE
18"X18" CONCRETE PAD SHALL BE PLACED AROUND
VALVE BOXES LOCATED OUTSIDE OF PAVEMENT AREAS
VALVE BOX SHALL BE SCREW TYPE OF ADJUSTMENT

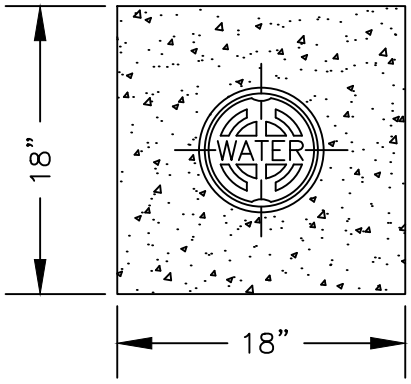

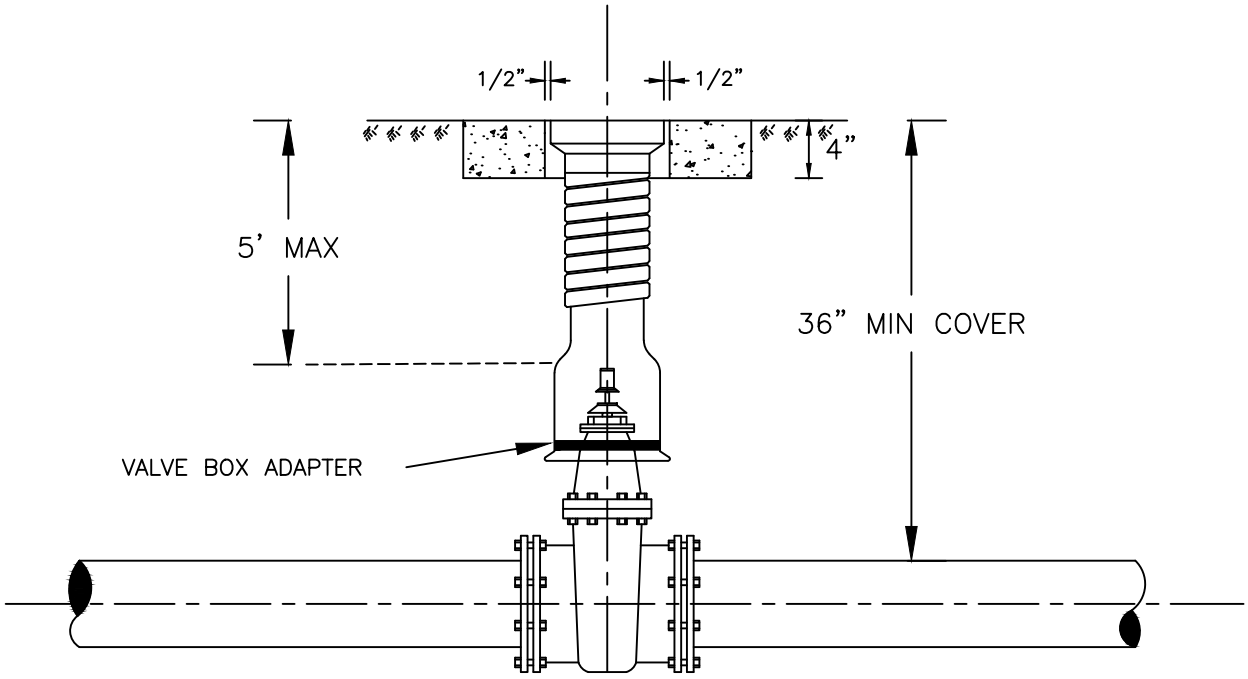

MECHANICAL JOINT FITTINGS AND PIPE RESTRAINED BY USING
MEGA-LUG RESTRAINING FLANGES

STANDARD DETAIL NO. WD-8	TYPICAL VALVE & BOX INSTALLATION SCALE: NONE	DATE: 01/2020

CITY OF WINCHESTER, VA
DEPARTMENT OF PUBLIC UTILITIES

THE FOLLOWING JOINTS MUST BE RESTRAINED IN ALL APPLICATIONS:

1. BEND – INLET & OUTLET
2. VALVES – INLET & OUTLET
3. TEE – ALL BRANCHES
4. REDUCERS – LARGER PIPE ONLY
5. DEAD ENDS
6. HYDRANT RUNOUTS SHALL BE RESTRAINED AS DEAD ENDS

THRUST RESTRAINT ON SLIP JOINT DUCTILE IRON PIPE SHALL BE FLEXING JOINT OR APPROVED EQUAL.

THRUST RESTRAINT ON DUCTILE IRON FITTINGS SHALL BE PROVIDED BY THE USE OF MECHANICAL JOINT FITTINGS WITH MEGALUG SERIES 1100 OR UNI–FLANGE SERIES 1400 (OR APPROVED EQUAL).

WATER LINE SHALL ALSO BE SECURED W/THRUST BLOCKING PER CITY OF WINCHESTER STD. DETAILS WD–10 AND WD–11.

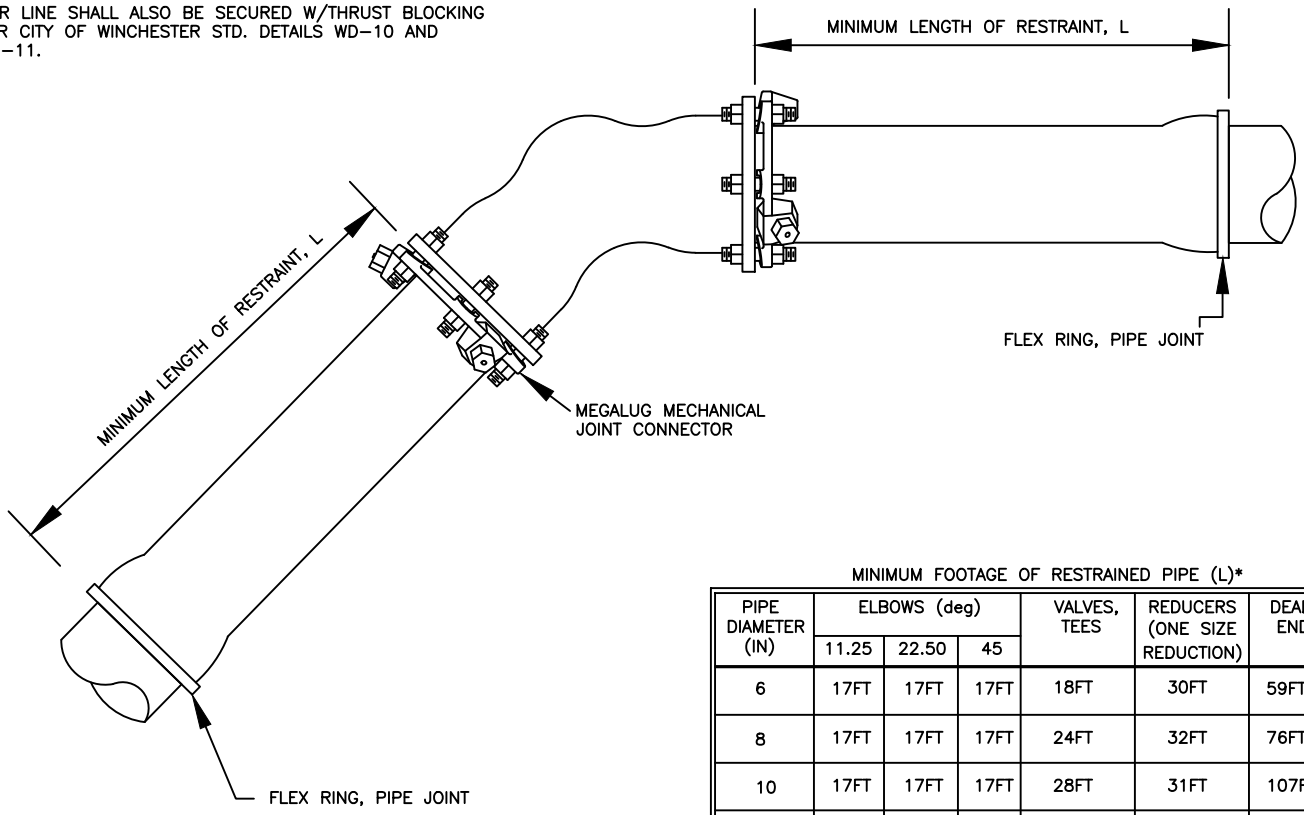

MINIMUM FOOTAGE OF RESTRAINED PIPE (L)*

PIPE DIAMETER (IN)	ELBOWS (deg)			VALVES, TEES	REDUCERS (ONE SIZE REDUCTION)	DEAD END
	11.25	22.50	45			
6	17FT	17FT	17FT	18FT	30FT	59FT
8	17FT	17FT	17FT	24FT	32FT	76FT
10	17FT	17FT	17FT	28FT	31FT	107FT
12	17FT	17FT	17FT	33FT	31FT	137FT
16	17FT	17FT	17FT	42FT	58FT	137FT
20	17FT	17FT	21FT	56FT	58FT	164FT
24	17FT	17FT	24FT	70FT	57FT	192FT

* FIGURES BASED ON 36 INCH BURIAL DEPTH 150 PSI TEST PRESSURE

*FIGURES BASED ON SOIL BEARING CAPACITY OF 1500 PSF

*FIGURES BASED ON LAYING CONDITION AS SPECIFIED IN THE WINCHESTER STANDARD DETAILS

STANDARD DETAIL NO. WD–9	DUCTILE IRON PIPE RESTRAINT SCALE: NONE	DATE: 01/2020

CITY OF WINCHESTER, VA
DEPARTMENT OF PUBLIC UTILITIES

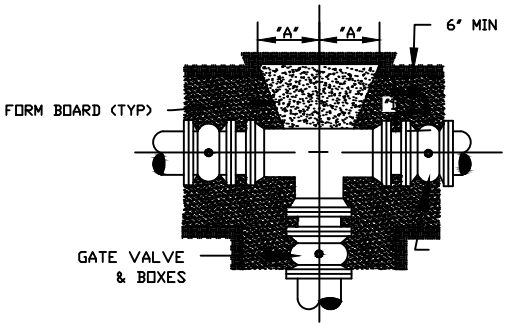

TEE, WYE, OR PLUG

IN LIEU OF WOOD FORMING THE MAY BE WRAPPED WITH POLYETHYLENE, AND THE CONCRETE POURED TO COMPLETELY SURROUNDS THE FITTING AND AGAINST UNDISTURBED SOIL. THE BEARING DIMENSION AGAINST UNDISTURBED SOIL SHALL REMAIN AS SHOWN.

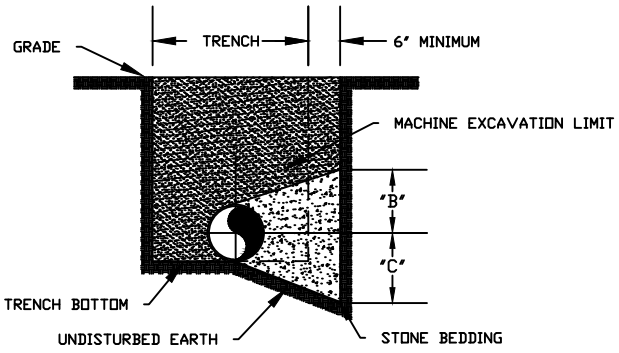

TYPICAL SECTION

*DENOTES HAND EXCAVATION
"D" = 12" MIN. FOR 10" AND SMALLER PIPE
"D" = 18" MIN. FOR 12" THRU 20" PIPE
SEE CHART BELOW FOR A,B,C DIMENSIONS.

CONCRETE DIMENSIONS FOR HORIZONTAL THRUST BLOCKS

PIPE DIA.	PLUGS, WYES & TEES			11 1/4° AND 22 1/2° BENDS			45° AND 90° BENDS		
--	A	B	C	A	B	C	A	B	C
6"	1'-0"	0'-9"	1'-0"	0'-9"	0'-9"	0'-9"	1'-3"	0'-9"	1'-9"
8"	1'-3"	0'-9"	1'-3"	0'-9"	0'-9"	0'-9"	1'-6"	0'-9"	2'-3"
10"	1'-6"	0'-9"	1'-6"	1'-0"	0'-9"	1'-3"	1'-9"	0'-9"	2'-6"
12"	1'-9"	1'-0"	2'-6"	1'-3"	1'-0"	1'-6"	2'-0"	1'-0"	3'-0"
14"	2'-0"	1'-0"	3'-0"	1'-3"	1'-0"	1'-6"	2'-6"	1'-0"	4'-0"
16"	2'-3"	1'-0"	3'-6"	1'-6"	1'-0"	2'-0"	2'-9"	1'-0"	4'-6"
18"	2'-6"	1'-3"	3'-9"	1'-6"	1'-3"	2'-0"	3'-0"	1'-3"	4'-9"
20"	2'-9"	1'-6"	4'-0"	1'-9"	1'-6"	2'-0"	3'-3"	1'-6"	5'-0"

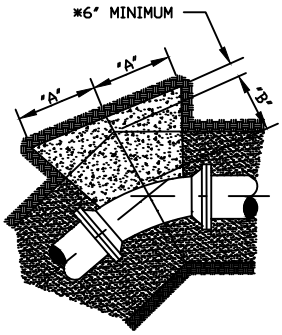

11 1/4 THRU 90° BENDS

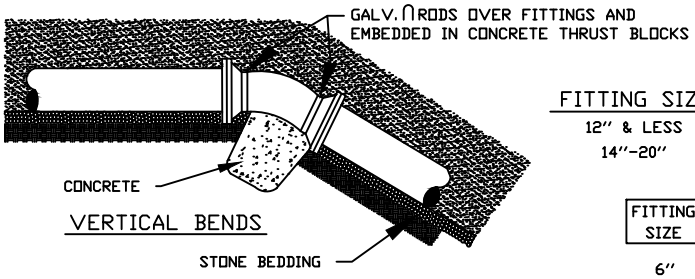

VERTICAL BENDS

THRUST BLOCKS FOR VERTICAL UP BENDS SHALL BE THE SAME AS FOR HORIZONTAL BENDS.

FITTING SIZE	ROD SIZE	NO. RODS	EMBEDMENT
12" & LESS	6	2	30"
14"-20"	8	2	36"

FITTING SIZE	VOLUME OF THRUST BLOCK IN CU.YD.			
	11-1/4°	22-1/2°	45°	90°
6"	-	-	-	1.3
8"	-	-	1.1	2.3
10"	-	-	1.8	3.7
12"	-	1.2	2.8	5.5
14"	0.5	1.7	3.9	7.6
16"	0.9	2.3	5.1	-
18"	1.4	3.2	6.3	-
20"	2.2	4.5	7.8	-

* WATER LINE SHALL ALSO BE SECURED W/JOINT RESTRAINTS PER CITY OF WINCHESTER STD. DETAIL WD-9

STANDARD DETAIL NO. WD-10	CONCRETE THRUST BLOCKING SCALE: NONE	DATE: 01/2020

CITY OF WINCHESTER, VA
DEPARTMENT OF PUBLIC UTILITIES

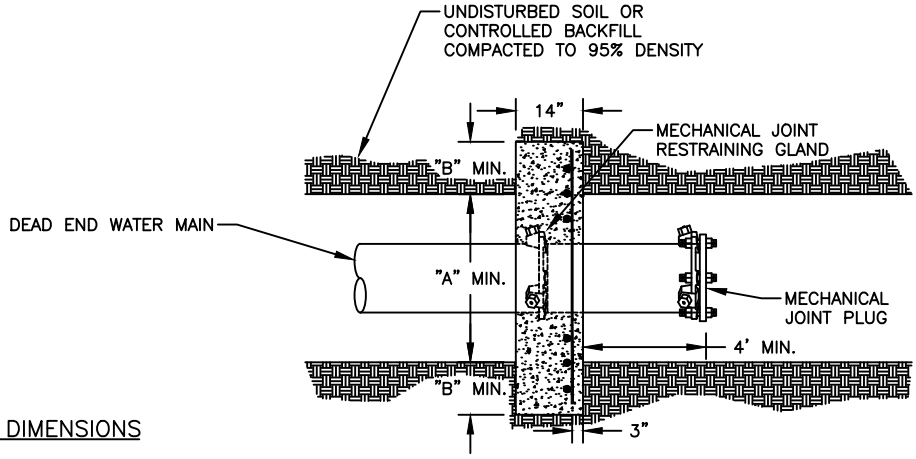

PLAN VIEW

DEAD END ANCHOR DIMENSIONS

LINE SIZE	"A"	"B"	"C"	"D"
6"	2'–0"	1'–0"	1'–6"	1'–0"
8"	2'–0"	1'–3"	1'–6"	1'–0"
10"	2'–3"	1'–6"	1'–6"	1'–6"
12"	2'–6"	2'–0"	1'–6"	1'–6"
16"	2'–9"	3'–0"	2'–0"	1'–6"
24"	3'–6"	4'–0"	2'–6"	2'–0"

"A" = TRENCH WIDTH
"B" = DISTANCE BEYOND TRENCH WALLS
"C" = DEPTH TO CENTER OF PIPE
"D" = DISTANCE BEYOND TRENCH BOTTOM

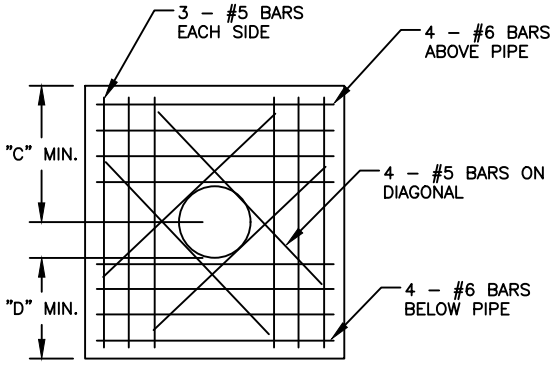

SECTION VIEW

NOTES:

1. BEARING AREA IS BASED ON 150 PSI TEST PRESSURE AND A SOIL BEARING PRESSURE OF 2000 PSF.
2. INCREASE BLOCK DIMENSIONS AS REQUIRED ON SOILS WITH LOWER BEARING VALUES.
3. ALL REINFORCING STEEL TO BE ASTM A–615, GRADE 60.
4. CONCRETE STRENGTH SHALL BE 3,000 PSI MIN.
5. DEAD END ANCHOR DESIGNS FOR PIPES LARGER THAN 24–INCH SHALL BE REVIEWED ON AN INDIVIDUAL BASIS.
6. ALL BACKFILL MATERIAL WITHIN 10 FEET OF A CONCRETE ANCHOR TO BE COMPACTED TO 95% THEORETICAL DENSITY AS DETERMINED BY ASTM D–698, WITH 6–INCH MAX. LIFTS.
7. WRAP THE RESTRAINING GLAND AS WELL AT THE PIPE WITH POLYETHYLENE PRIOR TO POURING CONCRETE.
8. TOP OF ANCHOR SHALL BE A MINIMUM OF 8 INCHES BELOW THE FINISHED GRADE.

STANDARD DETAIL NO. WD–11	DEAD END ANCHOR SCALE: NONE	DATE: 01/2020

CITY OF WINCHESTER, VA
DEPARTMENT OF PUBLIC UTILTIES

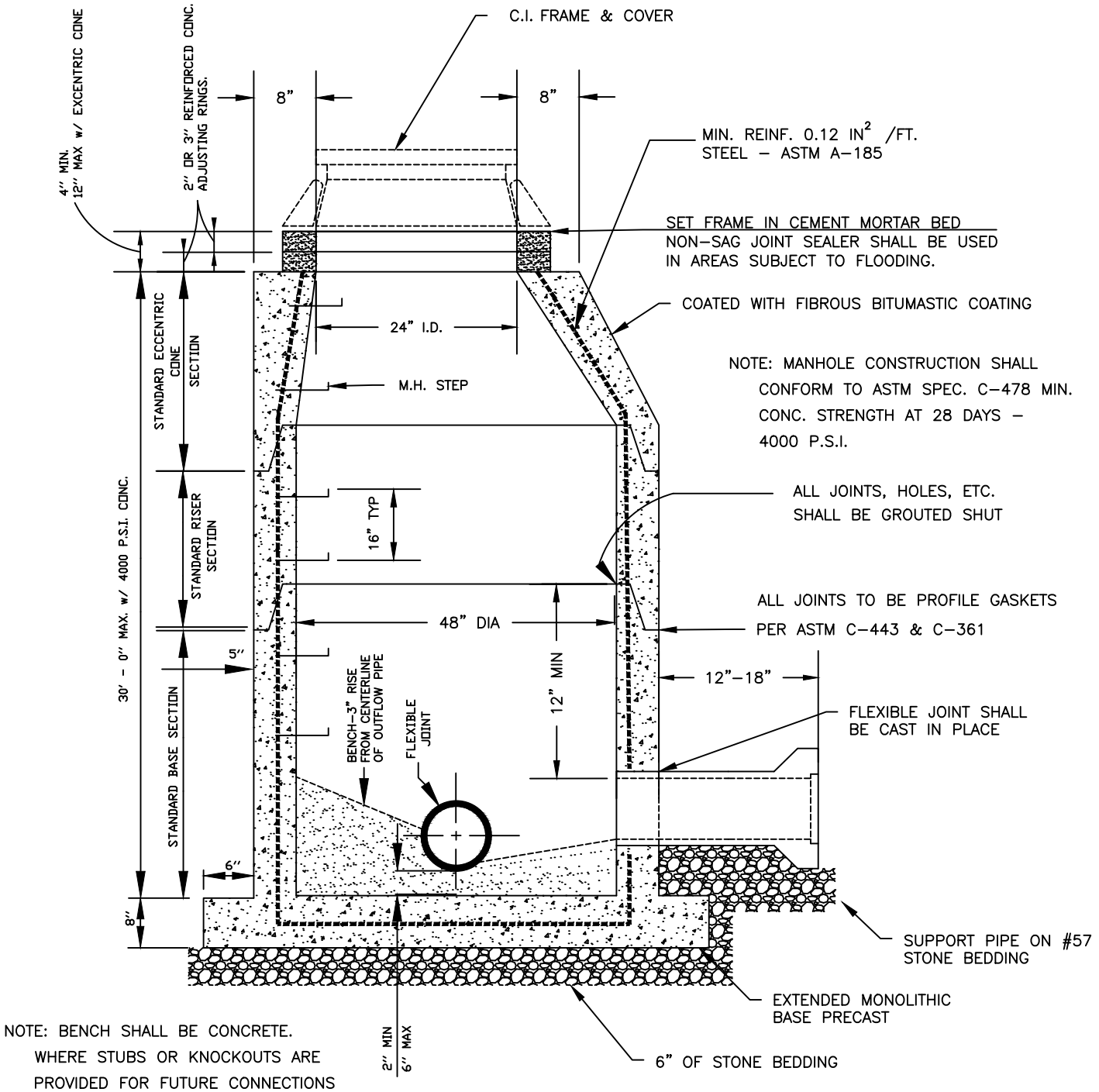

NOTE: BENCH SHALL BE CONCRETE.
WHERE STUBS OR KNOCKOUTS ARE
PROVIDED FOR FUTURE CONNECTIONS
BENCH SHALL BE FORMED TO
PROVIDE FOR FUTURE FLOW.

PRECAST CONCRETE BASE TO BE INTEGRAL WITH PRECAST RISER SECTION

STANDARD DETAIL NO. SS–1	STANDARD PRECAST CONCRETE MANHOLE SEWER 8" TO 24" SCALE: NONE	DATE: 01/2020

CITY OF WINCHESTER, VA
DEPARTMENT OF PUBLIC UTILITTIES

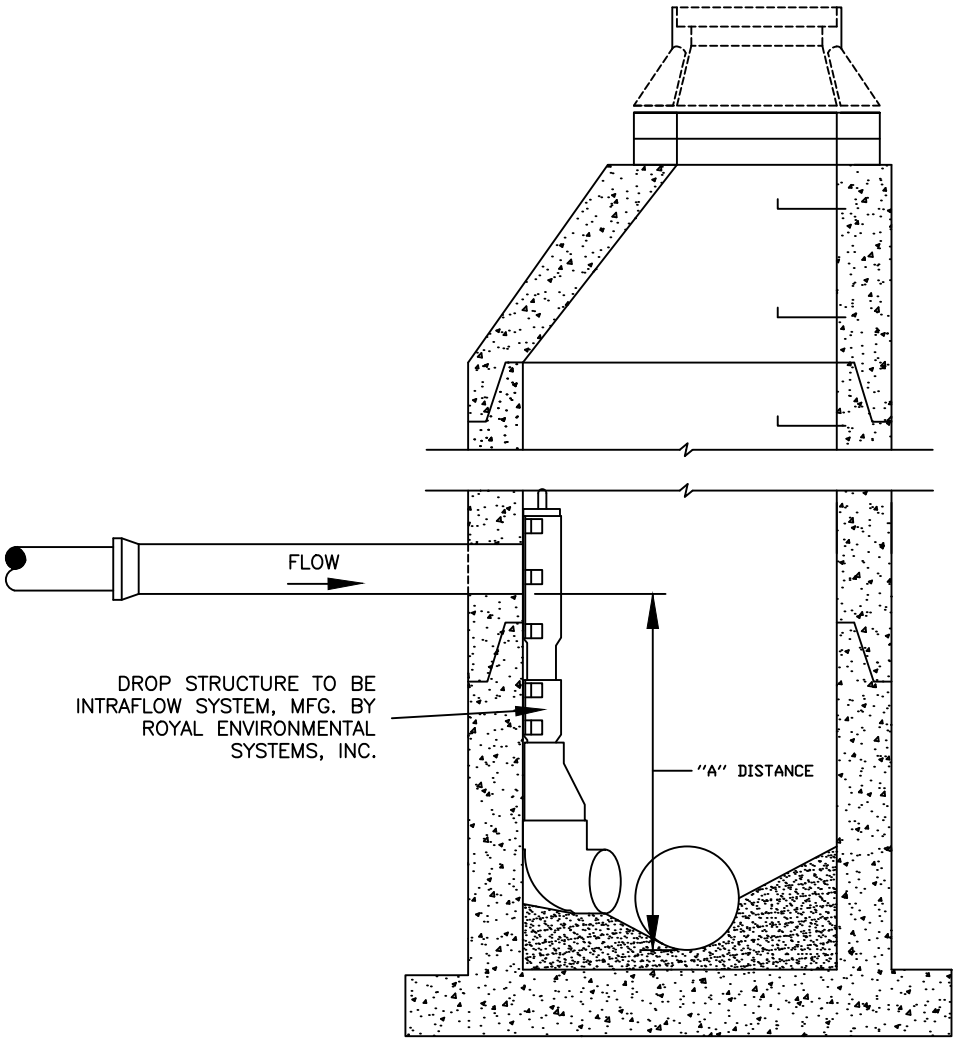

NOTES: WHERE "A" DISTANCE IS LESS THAN 3'-1" THE INCOMING SEWER SHALL BE LOWERED SO THAT THE TOP OF THE INCOMING SEWER IS NOT MORE THAN 2FT. ABOVE THE TOP OF THE OUTGOING SEWER.

STANDARD DETAIL NO. SS-2a	INSIDE DROP CONNECTION FOR SANITARY MAINS 8"-12" SCALE: NONE	DATE: 01/2020

CITY OF WINCHESTER, VA
DEPARTMENT OF PUBLIC UTILITTIES

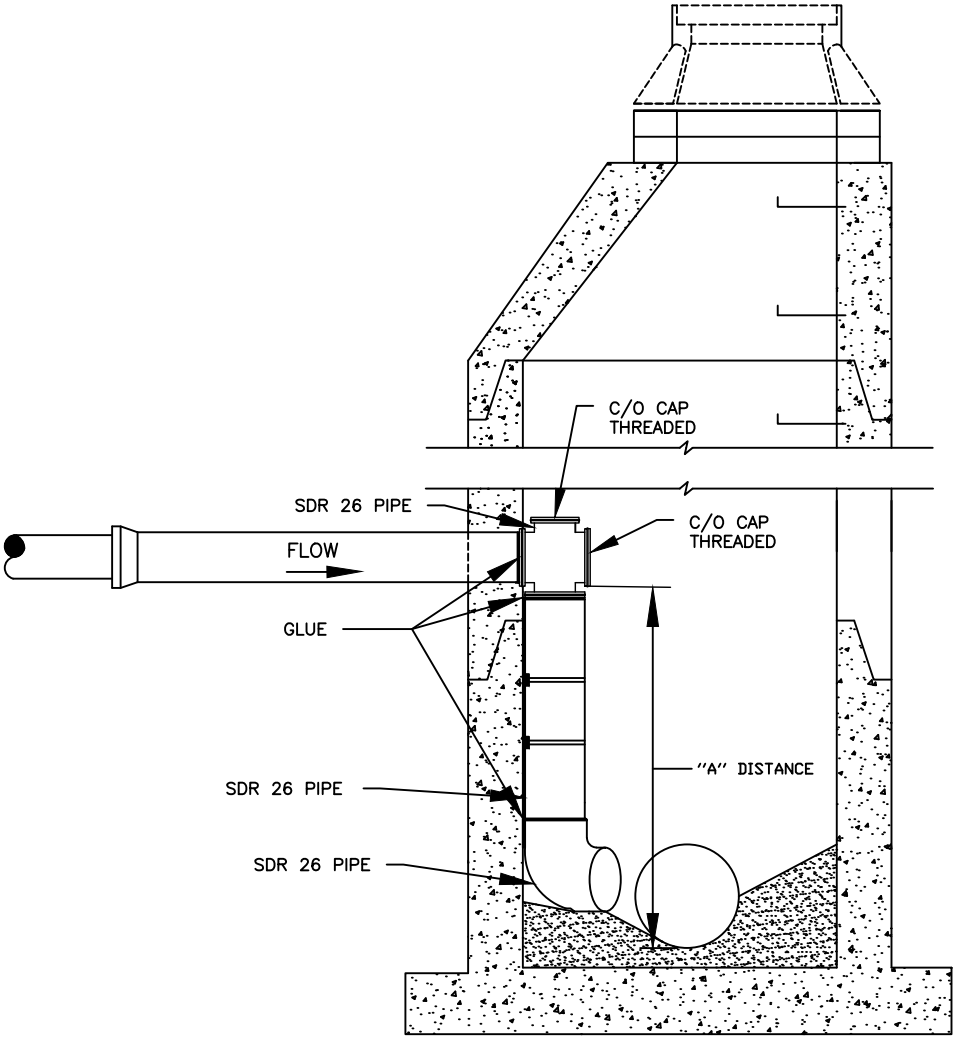

NOTES: WHERE "A" DISTANCE IS LESS THAN 3'-1" THE INCOMING SEWER SHALL BE LOWERED SO THAT THE TOP OF THE INCOMING SEWER IS NOT MORE THAN 2FT. ABOVE THE TOP OF THE OUTGOING SEWER.

STANDARD DETAIL NO. SS-2b	INSIDE DROP CONNECTION FOR SANITARY MAINS 8"-12" SCALE: NONE	DATE: 01/2020

CITY OF WINCHESTER, VA
DEPARTMENT OF PUBLIC UTILITIES

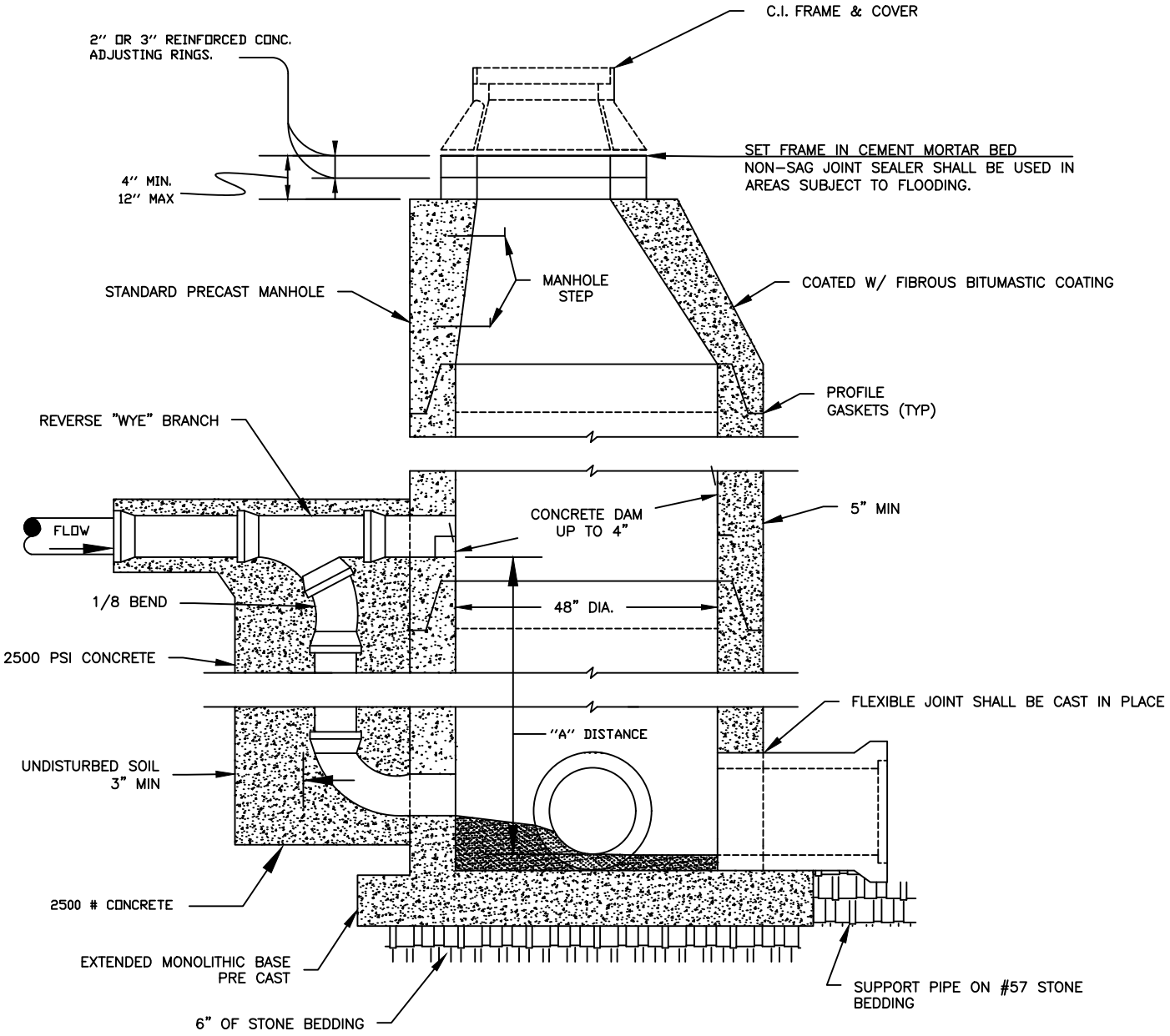

NOTES: WHERE "A" DISTANCE IS LESS THAN 6'-0" THE INCOMING SEWER SHALL BE LOWERED SO THAT THE TOP OF THE INCOMING SEWER IS NOT MORE THAN 2 FT. ABOVE THE TOP OF THE OUTGOING SEWER

WHERE "A" DISTANCE IS GREATER THAN 6'-0" USE STANDARD DROP CONNECTION.

CONCRETE ENCASEMENT MAY BE ELIMINATED IF D.I. PIPE AND FITTINGS ARE USED FOR DROP CONNECTION

STANDARD DETAIL NO. SS-3	OUTSIDE DROP CONNECTION FOR SANITARY MAINS 15" AND LARGER SCALE: NONE	DATE: 01/2020

CITY OF WINCHESTER, VA
DEPARTMENT OF PUBLIC UTILITITES

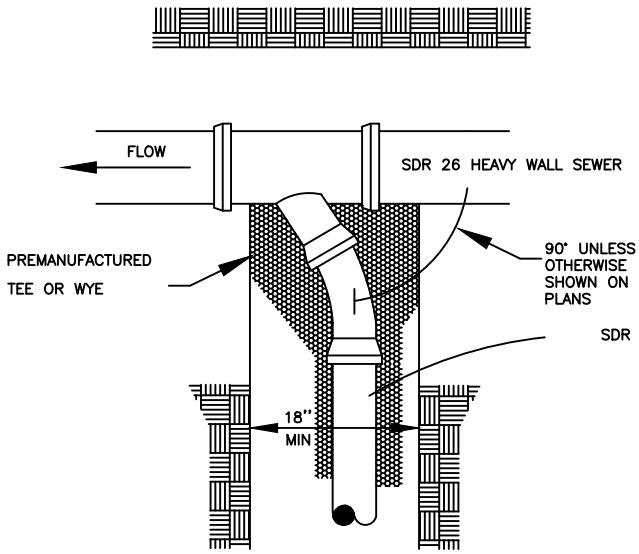

CONNECTION TO NEW MAIN

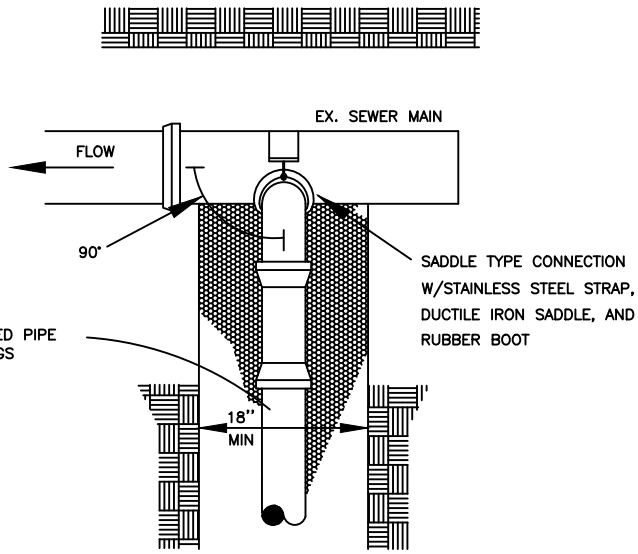

CONNECTION TO EXISTING MAIN

SDR 26 GASKETED PIPE
AND FITTINGS

* SEWER SERVICE CONNECTION PER SPECIFICATIONS
* STANDARD GRANULAR BEDDING THROUGHOUT

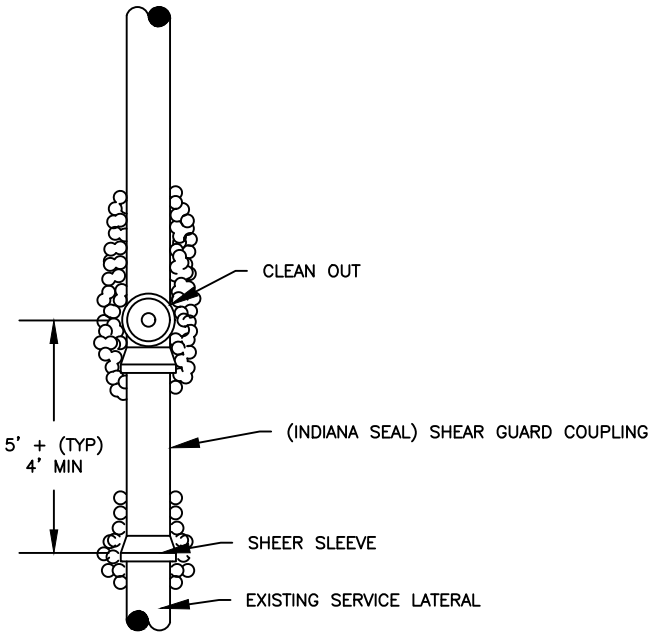

STANDARD DETAIL NO. SS-4	STANDARD SANITARY LATERAL CONNECTION SCALE: NONE	DATE: 01/2020

CITY OF WINCHESTER, VA
DEPARTMENT OF PUBLIC UTILITIES

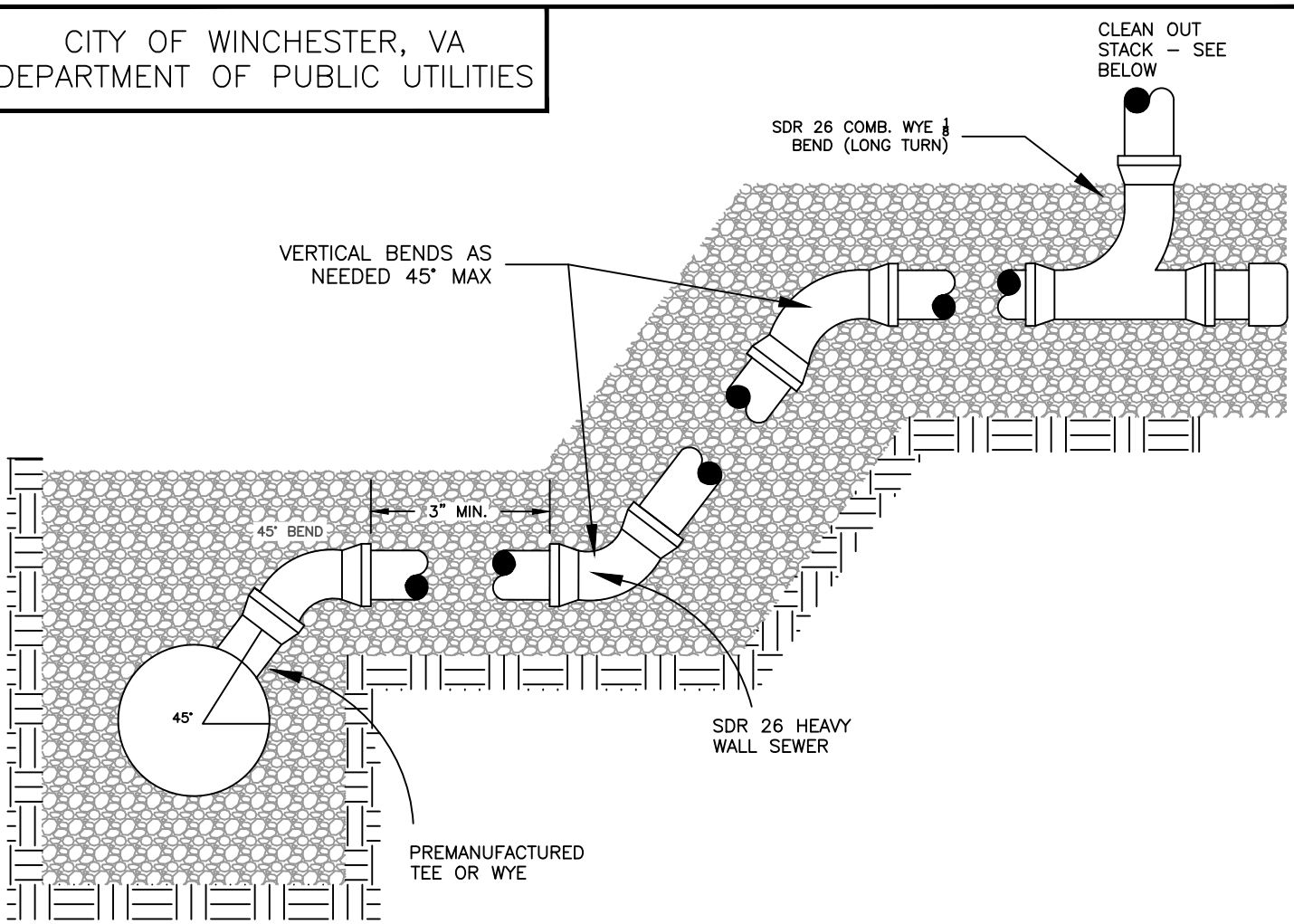

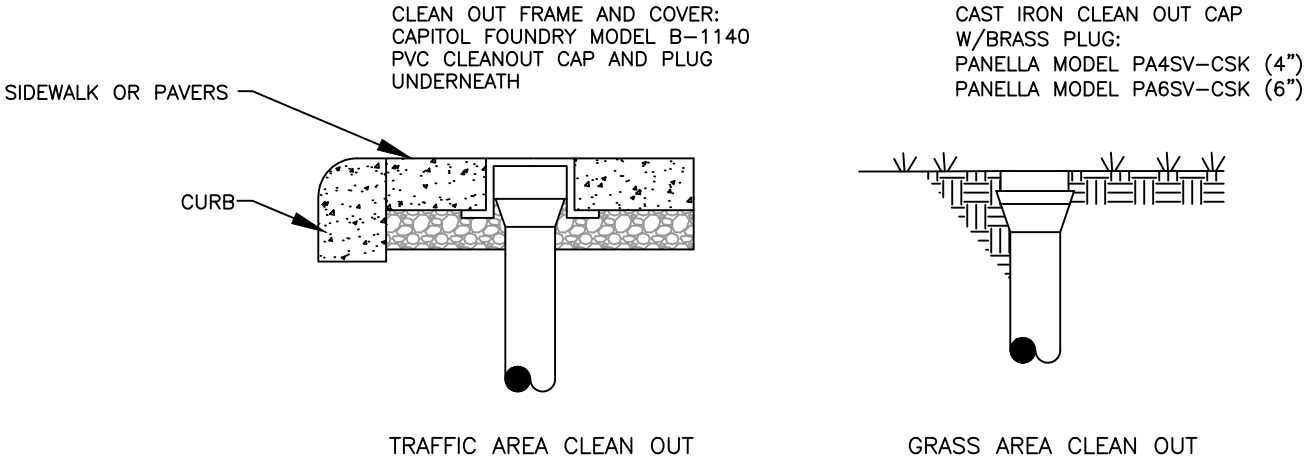

TRAFFIC AREA CLEAN OUT

GRASS AREA CLEAN OUT

STANDARD DETAIL NO. SS–5	STANDARD SANITARY LATERAL CONNECTION SCALE: NONE	DATE: 01/2020

CITY OF WINCHESTER, VA
DEPARTMENT OF PUBLIC UTILITIES

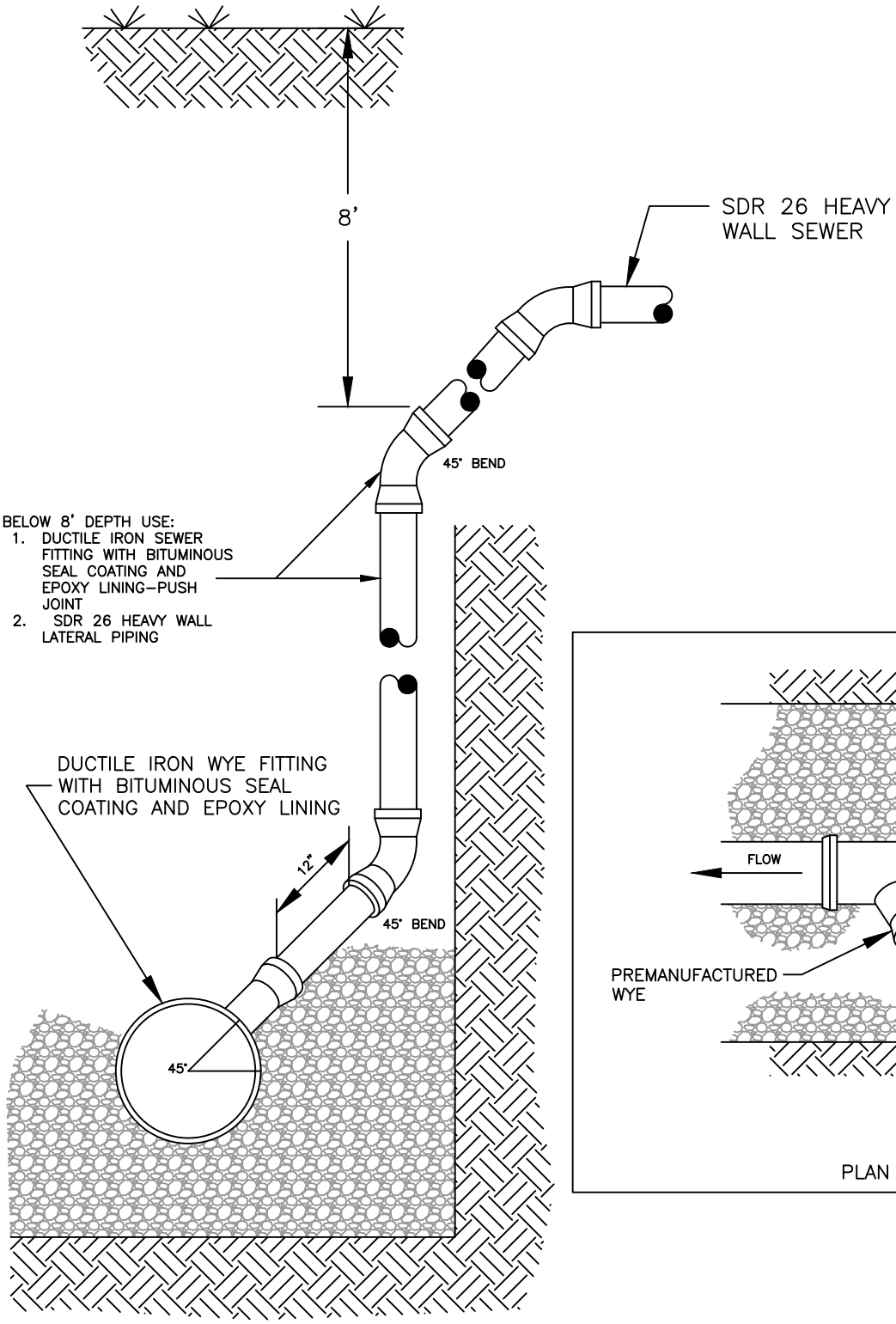

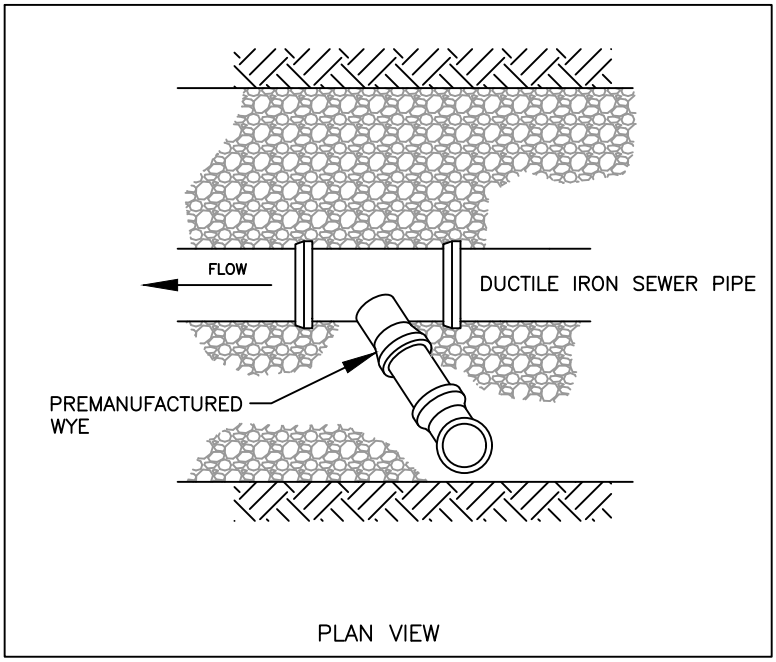

STANDARD DETAIL NO. SS–6	SANITARY LATERAL VERTICAL CONNECTION FOR DEPTHS GREATER THAN 15 FEET SCALE: NONE	DATE: 01/2020

CITY OF WINCHESTER, VA
DEPARTMENT OF PUBLIC UTILITIES

MFG. BY NEENAH FOUNDRY
CAT. NO. R–1643
FRAME: COMPONENT NO. N1371–0061
LID: COMPONENT NO. N1371–0062
CAST GRAY IRON
ASTM A–48 CLASS 35B
FINISH – NO PAINT

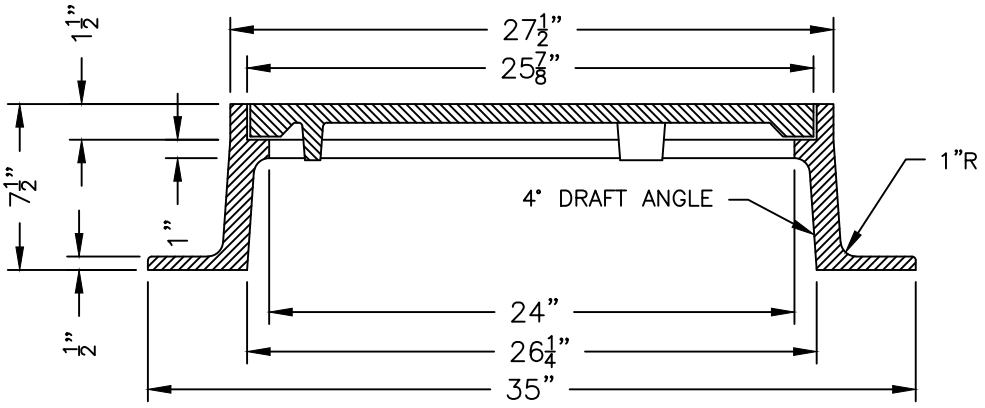

T–SEAL/CONCEALED PICK DETAIL

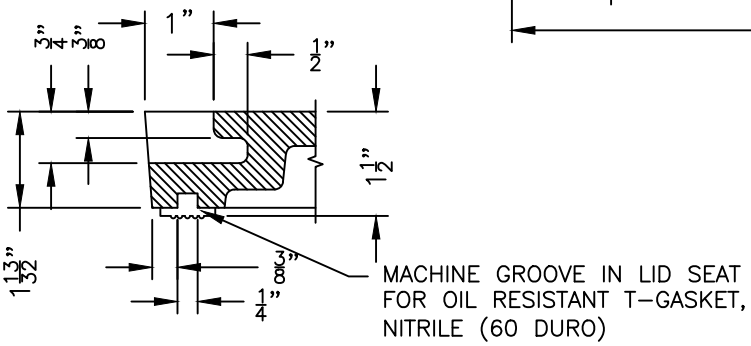

STANDARD DETAIL NO. SS–7	28" SANITARY SEWER MANHOLE LID AND FRAME SCALE: NONE	DATE: 01/2020

CITY OF WINCHESTER, VA
DEPARTMENT OF PUBLIC UTILITIES

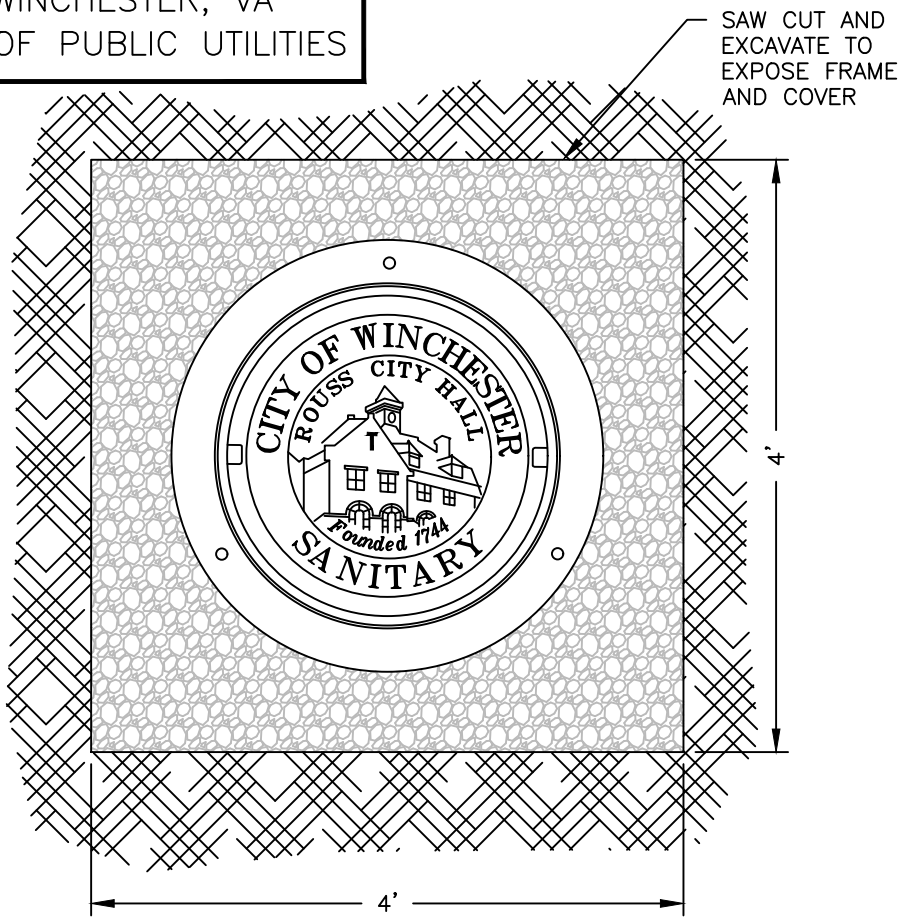

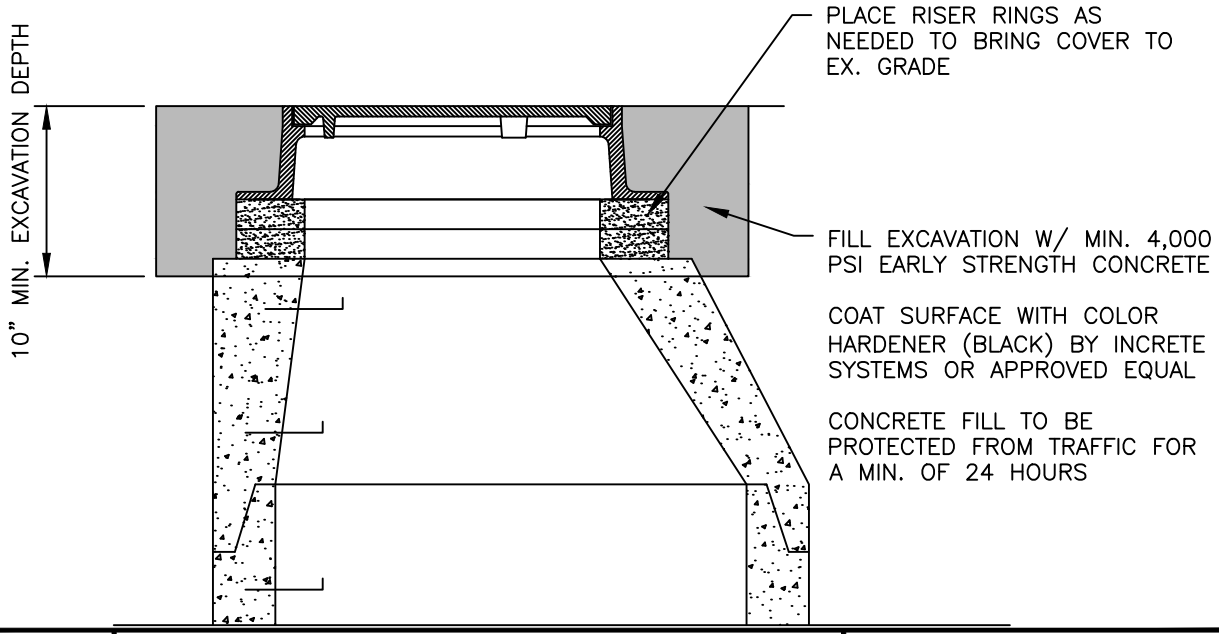

STANDARD DETAIL NO. SS-8	MANHOLE ADJUSTMENT DETAIL SCALE: NONE	DATE: 01/2020

CITY OF WINCHESTER, VA
DEPARTMENT OF PUBLIC UTILITIES

* WHERE THE TRENCH BOTTOM IS ROCK, IT SHALL BE EXCAVATED TO A MINIMUM OF 8" BELOW THE BOTTOM OF THE PIPE AND BACKFILLED WITH BEDDING MATERIAL FREE OF ROOTS, DEBRIS & STONES

* WHERE SUBGRADE IS UNSTABLE, PIPE SHALL BE BEDDED ON A MINIMUM OF 8" BEDDING MATERIAL

* BACKFILL TO BE PLACED IN 12" LIFTS AND COMPACTED TO 90% OF MAXIMUM DRY DENSITY

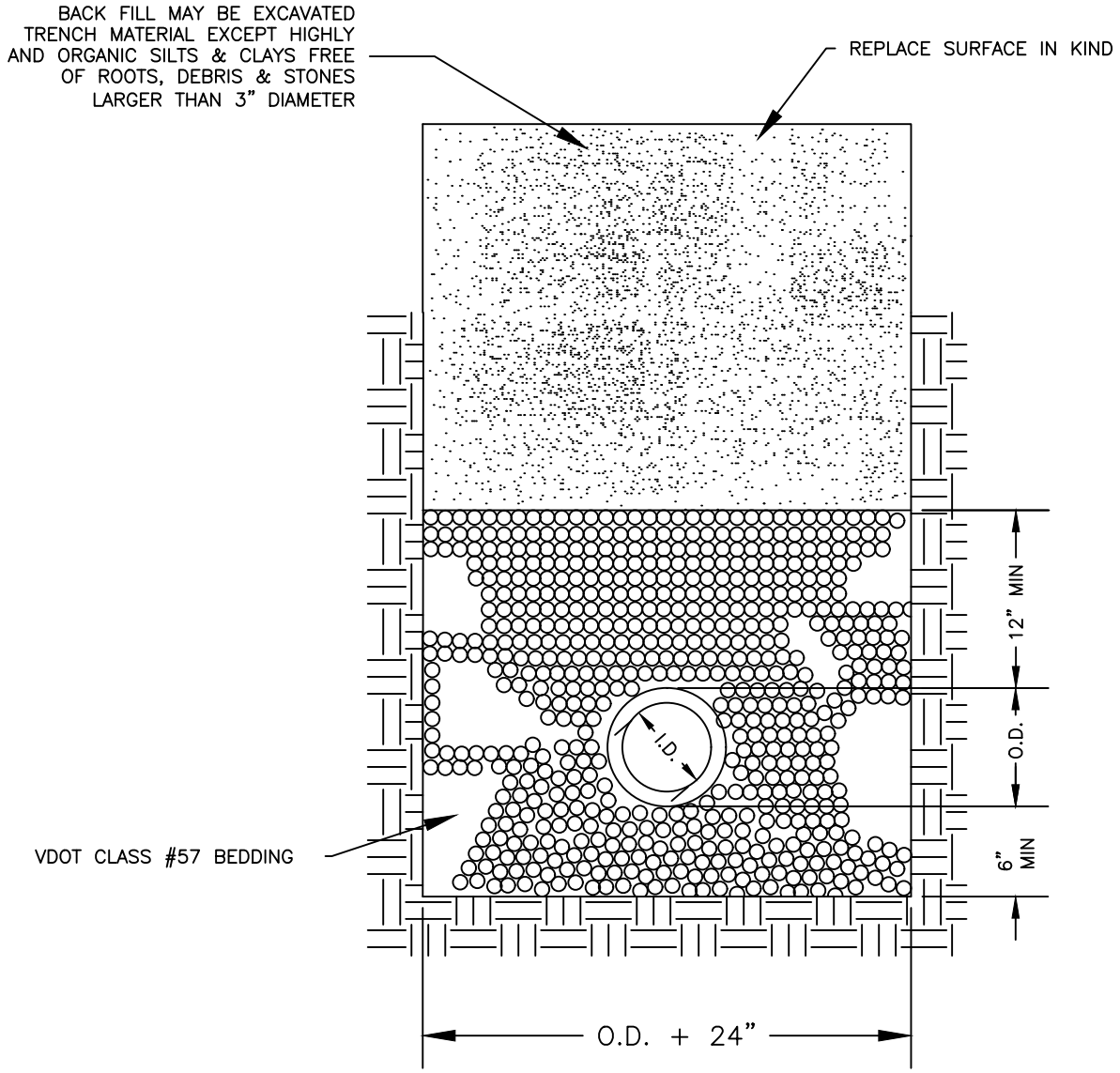

STANDARD DETAIL NO. WS-1	STANDARD BEDDING DETAIL OUTSIDE TRAFFIC AREAS (PVC OR DIP) SCALE: NONE	DATE: 01/2020

CITY OF WINCHESTER, VA
DEPARTMENT OF PUBLIC UTILITIES

* WHERE THE TRENCH BOTTOM IS ROCK, IT SHALL BE EXCAVATED TO A MINIMUM OF 8'' BELOW THE BOTTOM OF THE PIPE AND BACKFILLED WITH BEDDING MATERIAL FREE OF ROOTS, DEBRIS & STONES

* WHERE SUBGRADE IS UNSTABLE, PIPE SHALL BE BEDDED ON A MINIMUM OF 8'' BEDDING MATERIAL

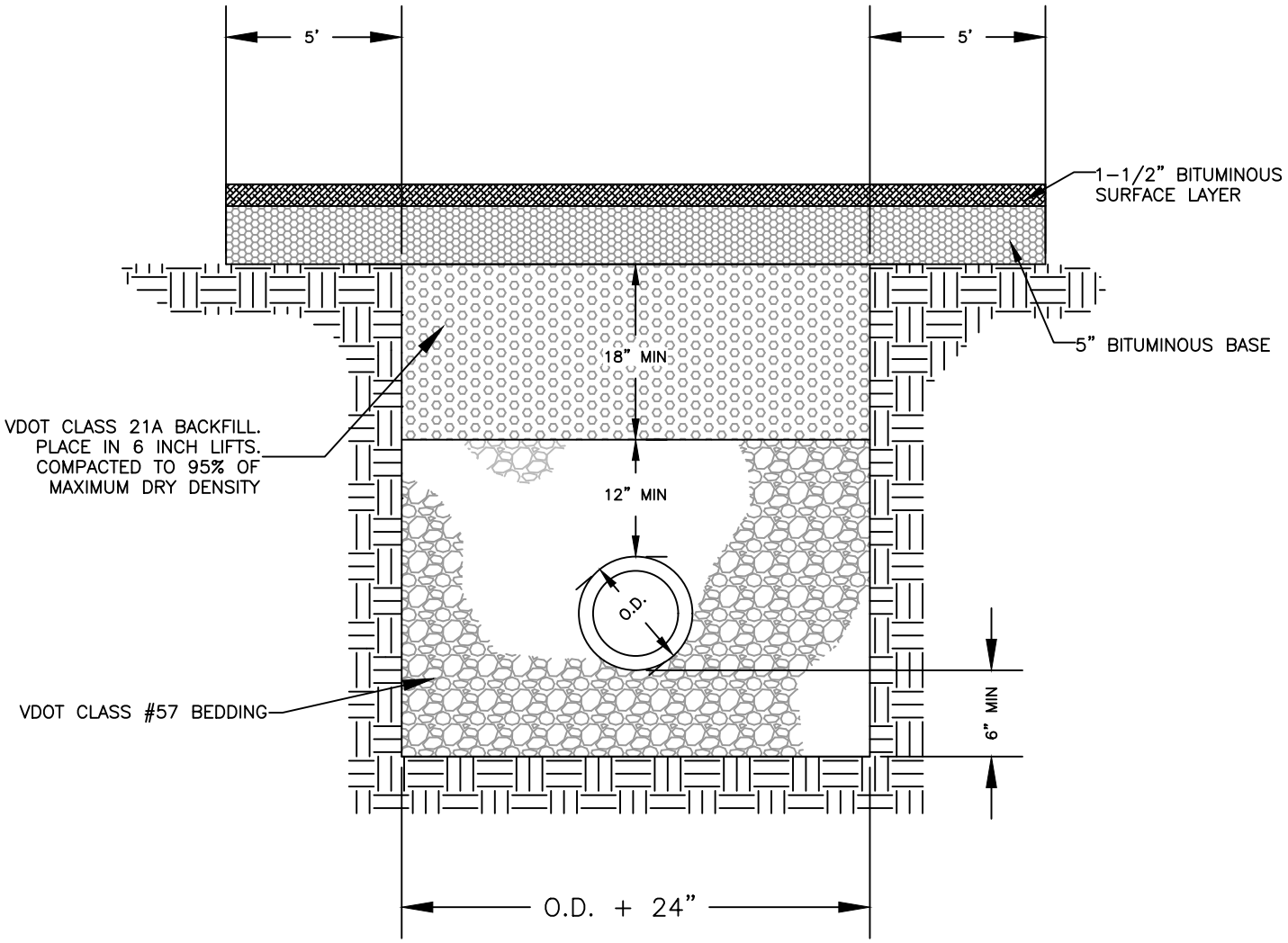

STANDARD DETAIL NO. WS-2	STANDARD BEDDING DETAIL WITHIN TRAFFIC AREAS (PVC OR DIP) SCALE: NONE	DATE: 01/2020

CITY OF WINCHESTER, VA
DEPARTMENT OF PUBLIC UTILITIES

* WHERE THE TRENCH BOTTOM IS ROCK, IT SHALL BE EXCAVATED TO A MINIMUM OF 8" BELOW THE BOTTOM OF THE PIPE AND BACKFILLED WITH BEDDING MATERIAL FREE OF ROOTS, DEBRIS & STONES

* WHERE SUBGRADE IS UNSTABLE, PIPE SHALL BE BEDDED ON A MINIMUM OF 8" BEDDING MATERIAL

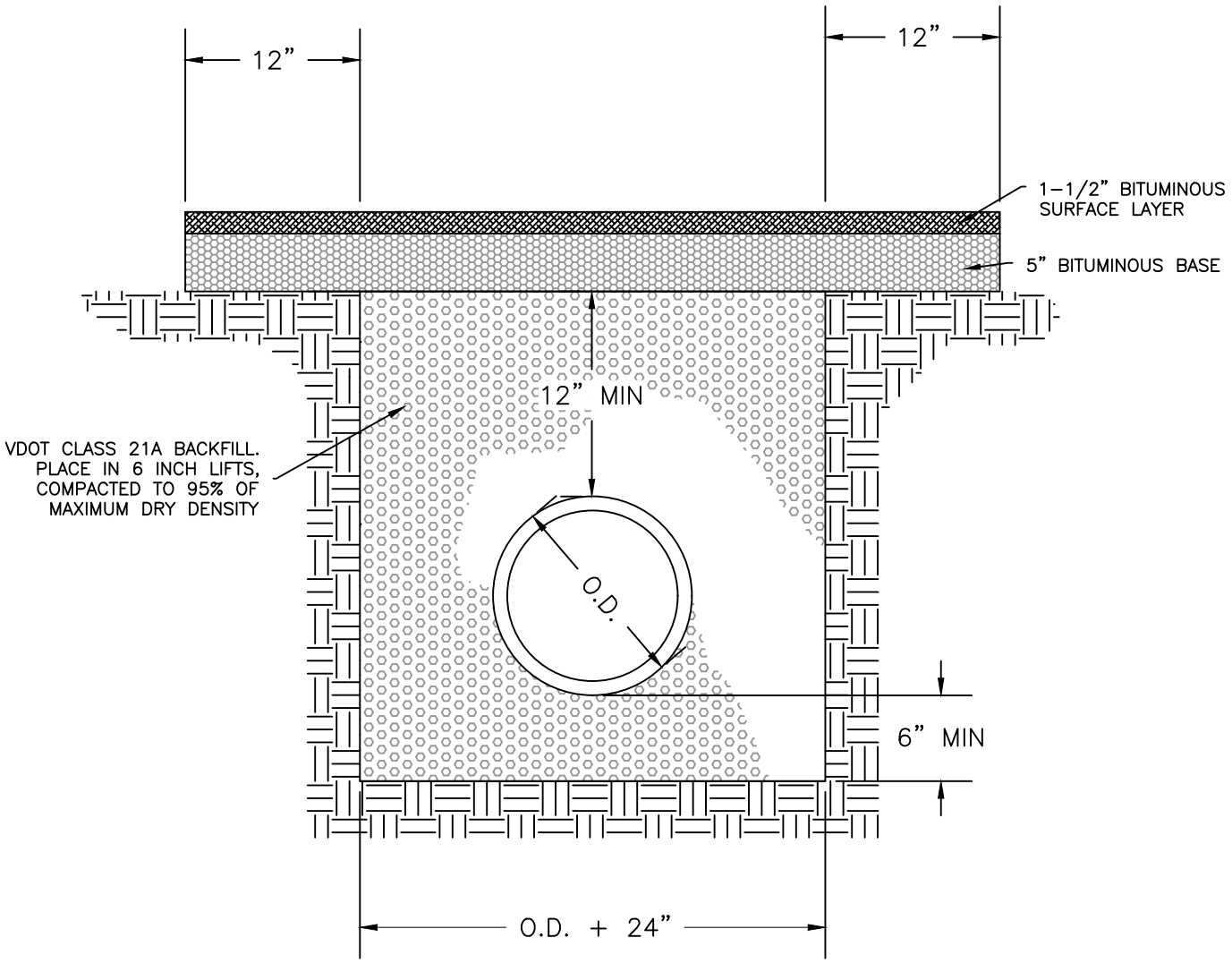

STANDARD DETAIL NO. SD-1	CONCRETE STORM DRAIN BEDDING WITHIN TRAFFIC AREAS (RCP) SCALE : NONE	DATE: 01/2020

CITY OF WINCHESTER, VA
DEPARTMENT OF PUBLIC UTILITIES

* WHERE THE TRENCH BOTTOM IS ROCK, IT SHALL BE EXCAVATED TO A MINIMUM OF 8" BELOW THE BOTTOM OF THE PIPE AND BACKFILLED WITH BEDDING MATERIAL FREE OF ROOTS, DEBRIS & STONES

* WHERE SUBGRADE IS UNSTABLE, PIPE SHALL BE BEDDED ON A MINIMUM OF 8" BEDDING MATERIAL

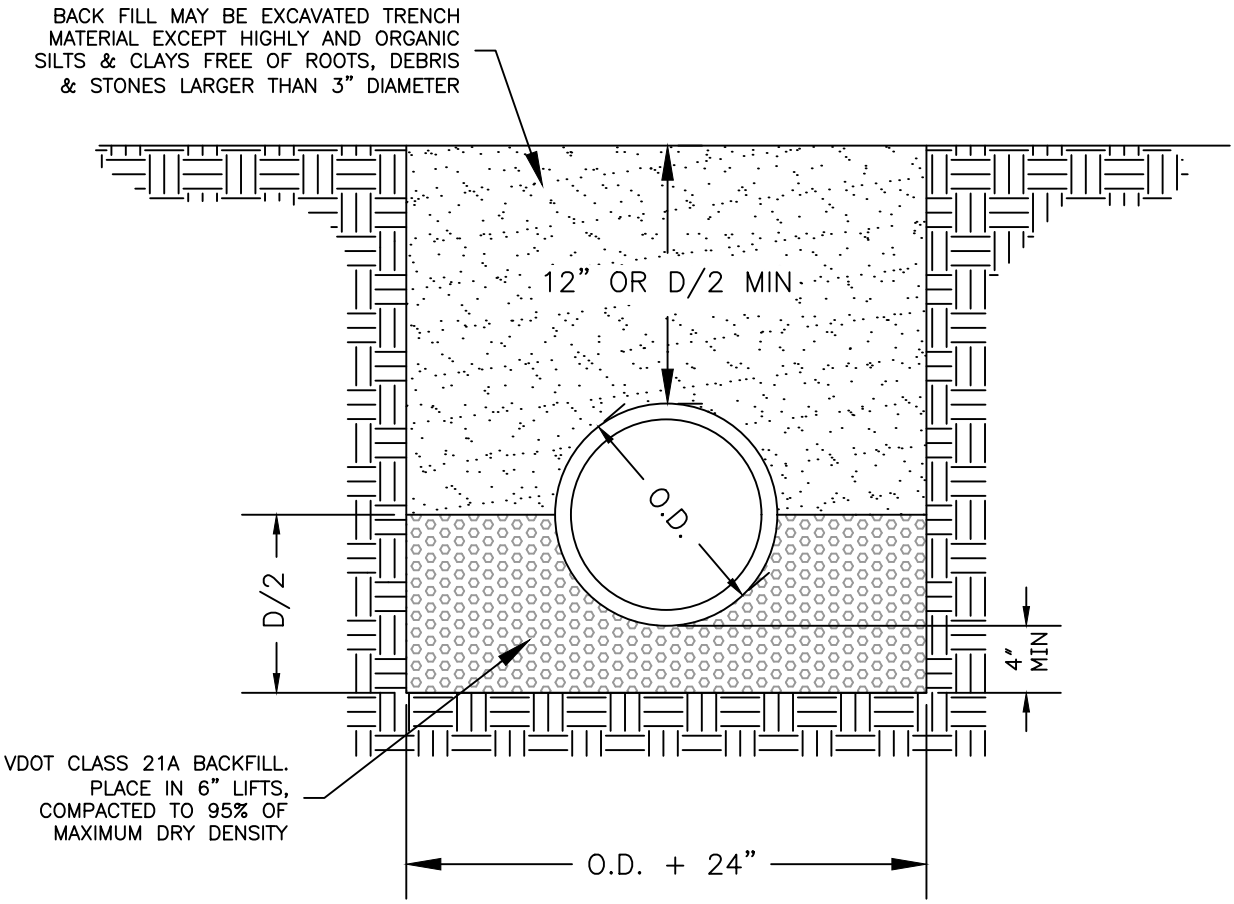

STANDARD DETAIL NO. SD-2a	STORM DRAIN BEDDING OUTSIDE TRAFFIC AREAS (RCP) SCALE: NONE	DATE: 01/2020

CITY OF WINCHESTER, VA
DEPARTMENT OF PUBLIC UTILITIES

* WHERE THE TRENCH BOTTOM IS ROCK, IT SHALL BE EXCAVATED TO A MINIMUM OF 8'' BELOW THE BOTTOM OF THE PIPE AND BACKFILLED WITH BEDDING MATERIAL FREE OF ROOTS, DEBRIS & STONES

* WHERE SUBGRADE IS UNSTABLE, PIPE SHALL BE BEDDED ON A MINIMUM OF 8'' BEDDING MATERIAL

* HDPE PIPE MUST BE INSTALLED PER MANUFACTURERS SPECS

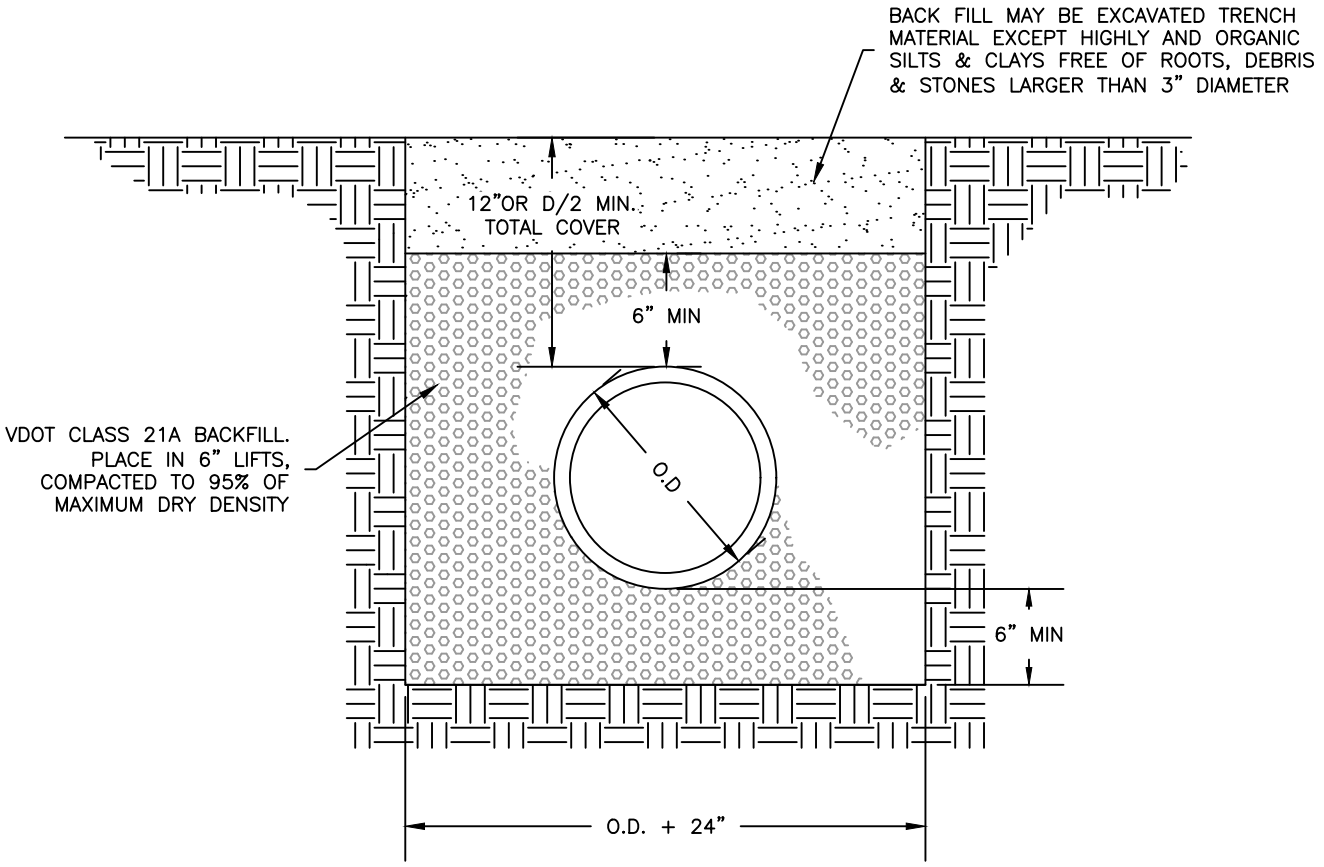

STANDARD DETAIL NO. SD-2b	STORM DRAIN BEDDING OUTSIDE TRAFFIC AREAS (CORRUGATED HDPE) SCALE: NONE	DATE: 01/2020

CITY OF WINCHESTER, VA
DEPARTMENT OF PUBLIC UTILITIES

MFG. BY NEENAH FOUNDRY
CAT. NO. R–1643
FRAME: COMPONENT NO. N1371–0061
LID: COMPONENT NO. N1371–0063
CAST GRAY IRON
ASTM A–48 CLASS 35B
FINISH – NO PAINT

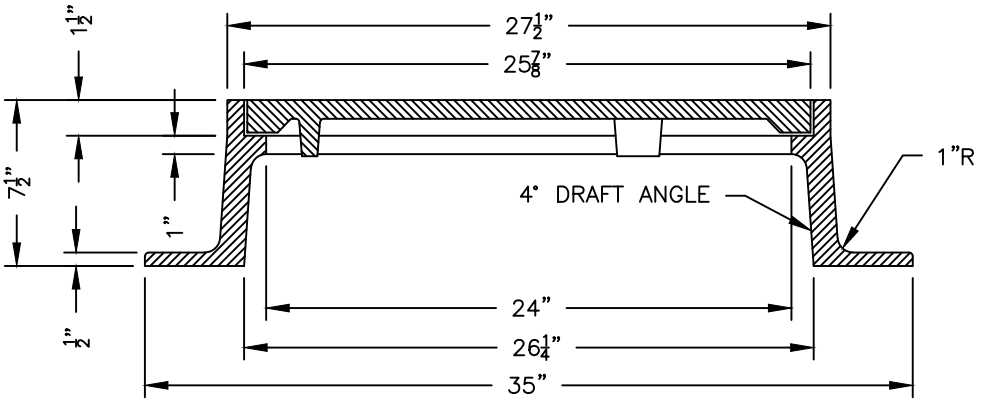

T–SEAL/CONCEALED PICK DETAIL

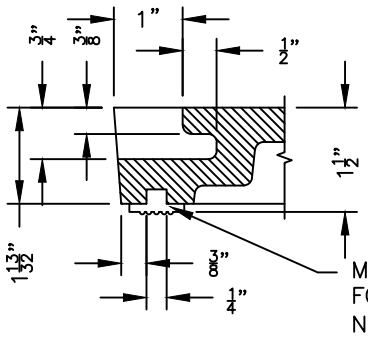

STANDARD DETAIL NO. SD–3	28" STORM MANHOLE LID AND FRAME SCALE: NONE	DATE: 01/2020

CITY OF WINCHESTER, VA
DEPARTMENT OF PUBLIC UTILTIES

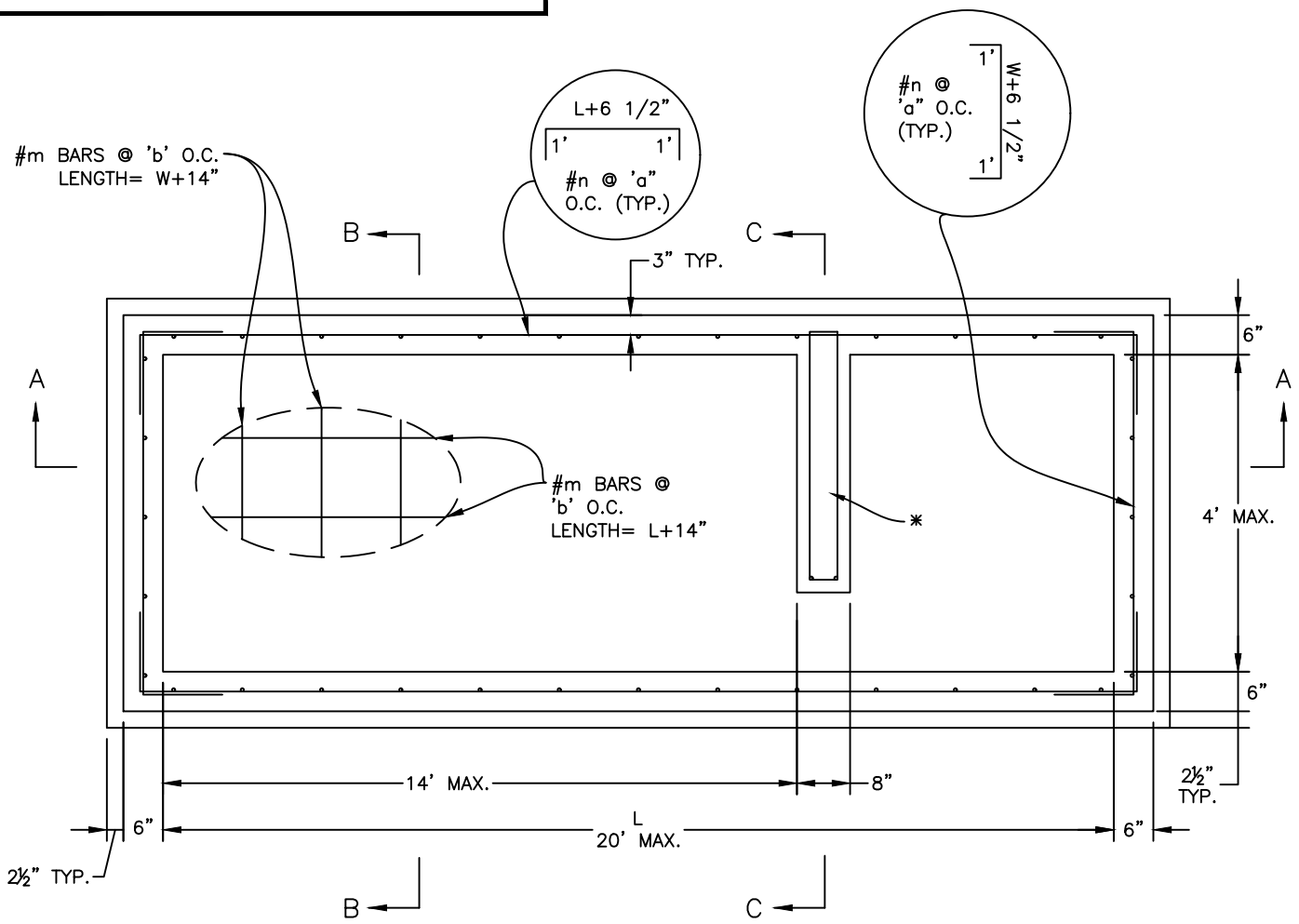

* CENTER WALL TO BE USED WHEN THROAT LENGTH EXCEEDS 14' (SEE SEC. C–C)

PLAN VIEW

TOP SLAB REMOVED

NOTES:
1. CONCRETE TO BE 4,000 PSI MIN.
2. STEEL TO BE GRADE 60
3. DOWEL HOLES PROVIDED TO PREVENT SETTLEMENT OF ADJACENT CONCRETE
4. WEEP HOLES PROVIDED
5. STEPS PROVIDED WHEN HEIGHT IS 4' OR GREATER
6. GUTTER PAN/THROAT FACE TO BE POURED IN FIELD

BAR SPACING				
L	HORIZ.		BASE	
–	n	a	m	b
>16'	5	6"	4	12"
>12'	5	9"	4	12"
>8'	4	9"	4	16"
≤8'	4	14"	4	16"

STANDARD DETAIL NO. SD–4a	DI–3A, 3B, 3C (SHALLOW) SCALE: NONE	DATE: 01/2020 SHEET 1 OF 3

CITY OF WINCHESTER, VA
DEPARTMENT OF PUBLIC UTILTIES

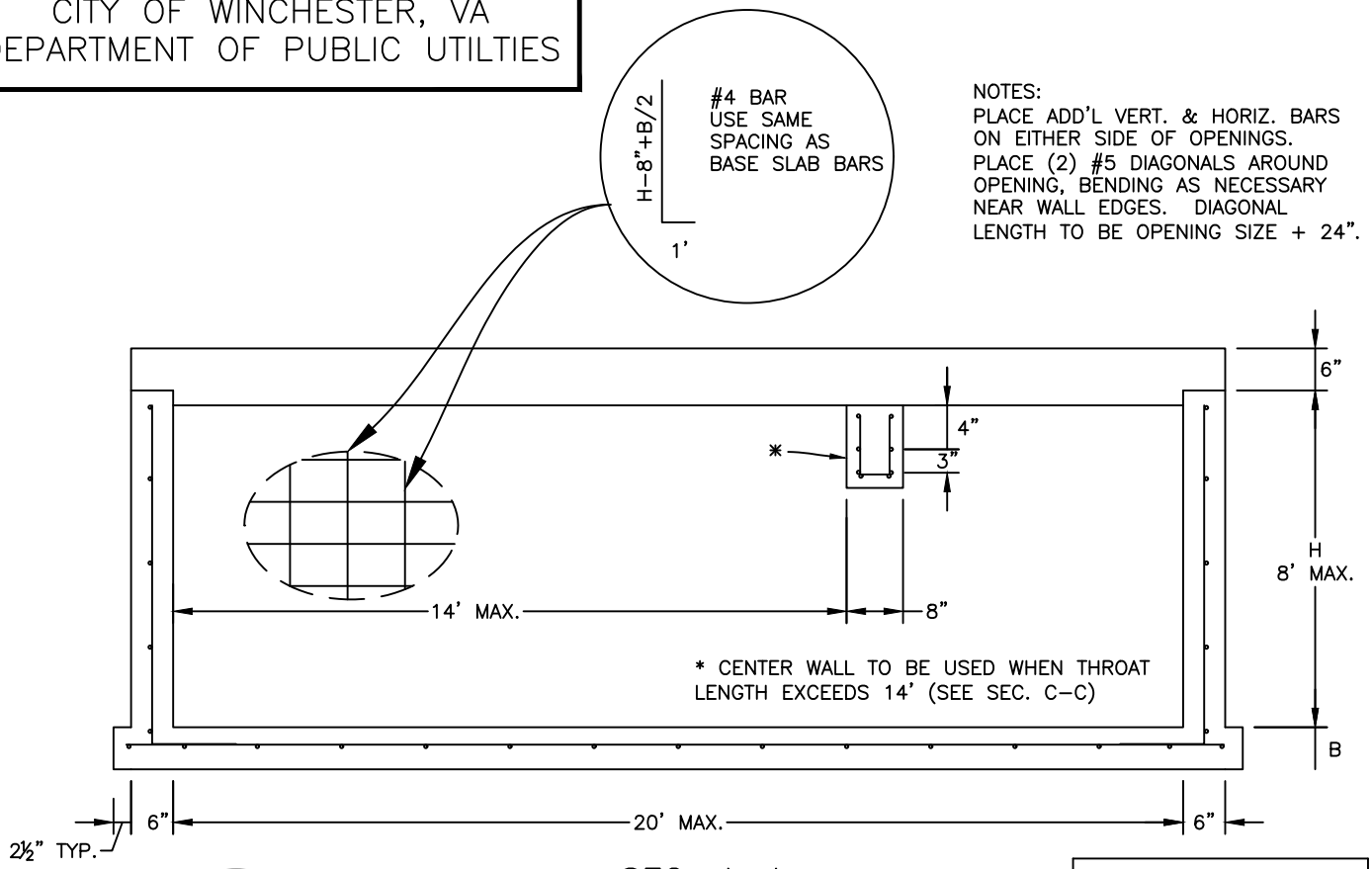

NOTES:
PLACE ADD'L VERT. & HORIZ. BARS ON EITHER SIDE OF OPENINGS.
PLACE (2) #5 DIAGONALS AROUND OPENING, BENDING AS NECESSARY NEAR WALL EDGES. DIAGONAL LENGTH TO BE OPENING SIZE + 24".

SEC. A−A

SLAB THICKNESS		
H	L	B
>7'	>14'	8"
>7'	≤14'	6"
≤7'	≤LMAX	6"

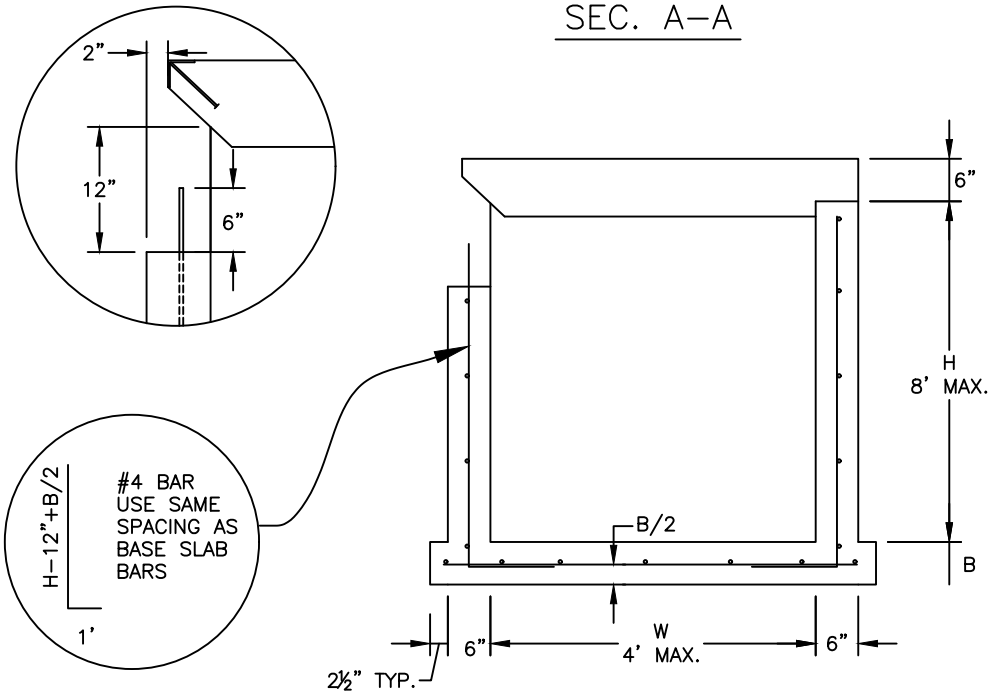

SEC. B−B

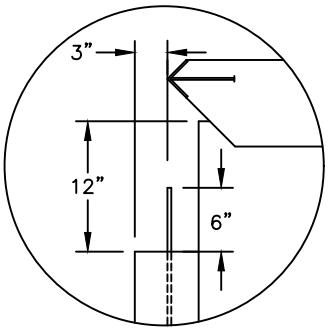

FOR USE WITH
CG−3 AND CG−7
CURB AND GUTTER

STANDARD DETAIL NO. SD−4b	DI−3A, 3B, 3C (SHALLOW) SCALE: NONE	DATE: 01/2020

CITY OF WINCHESTER, VA
DEPARTMENT OF PUBLIC UTILTIES

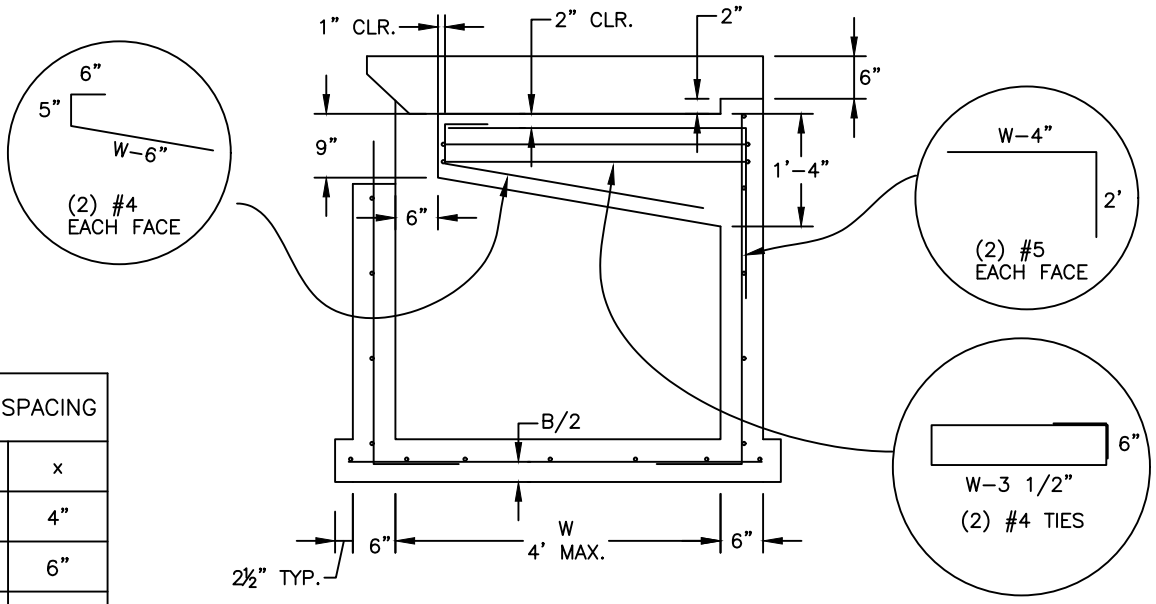

LONG. SPACING	
L	x
>11'	4"
>8'	6"
>7'	8"
≤7'	10"

SEC. C-C

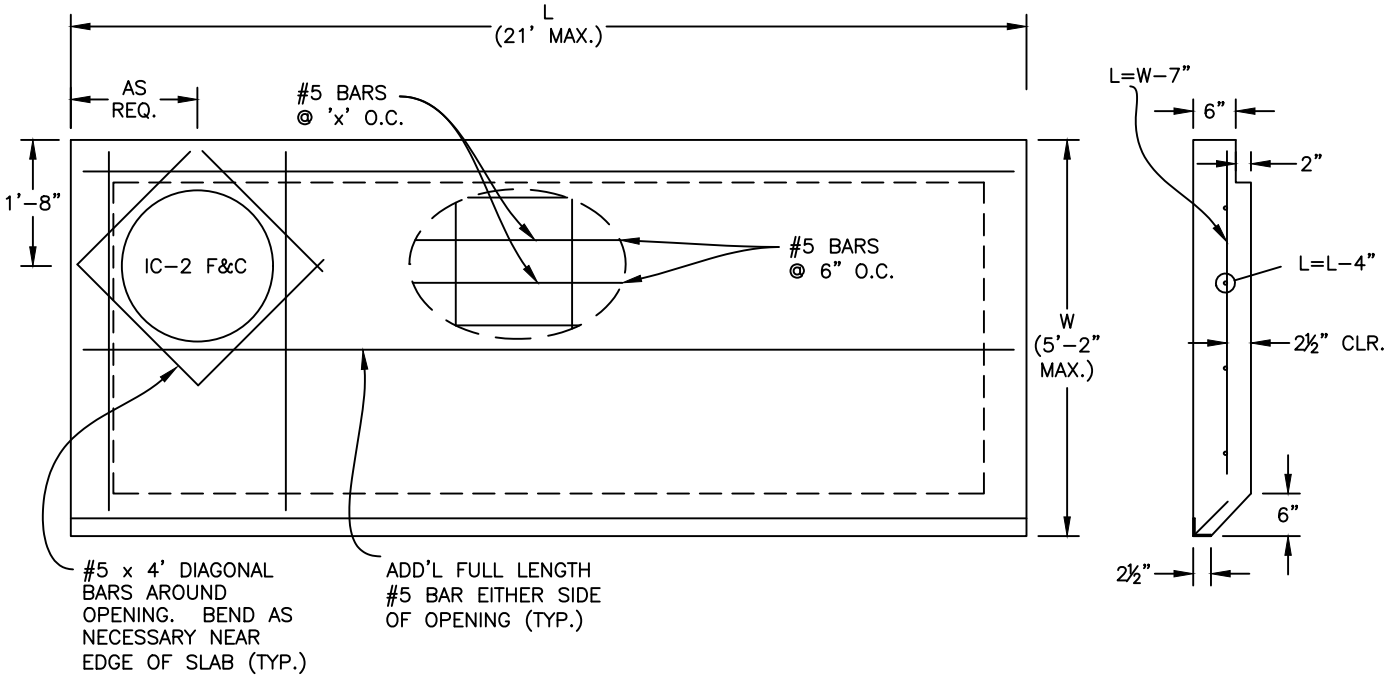

TOP SLAB

STANDARD DETAIL NO. SD-4c	DI-3A, 3B, 3C (SHALLOW) SCALE: NONE	DATE: 01/2020 SHEET 3 OF 3

CITY OF WINCHESTER, VA
DEPARTMENT OF PUBLIC UTILITIES

COMBINATION INLET FRAME, GRATE, AND CURB BOX MFG. BY NEENAH FOUNDARY
MODEL NUMBER R-3295
TYPE "L" GRATES

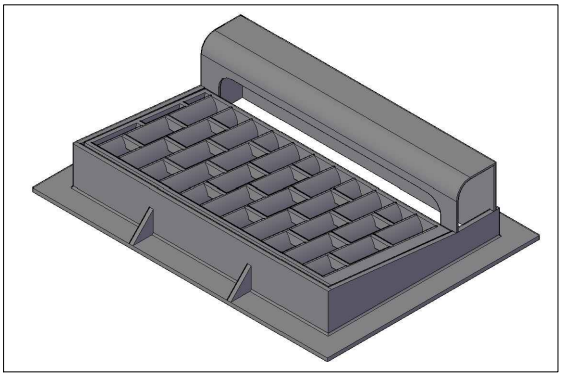

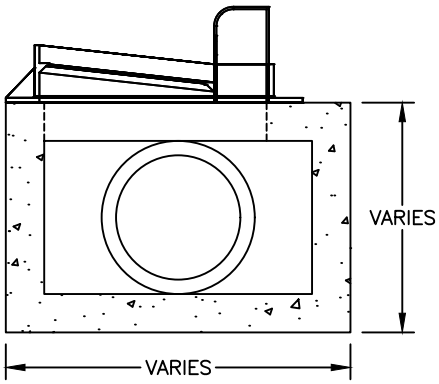

EXAMPLE PLACEMENT WITH FRAME SEATED ON TOP OF SHALLOW CONCRETE STORM BOX. GUTTER PAN IS TO BE POURED IN PLACE AROUND FRAME AND ADJACENT CURB IS TO BE FORMED TO MATCH DIMENSIONS OF CURB BOX.

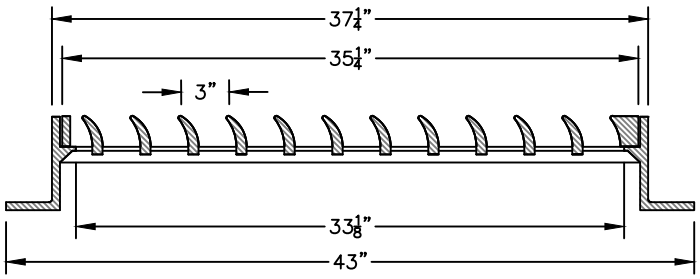

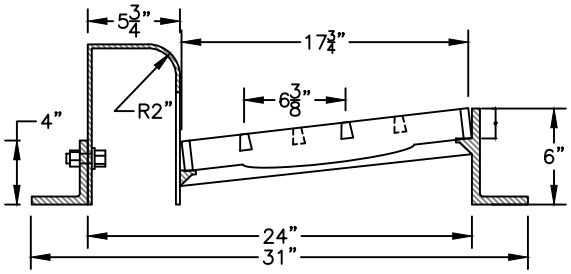

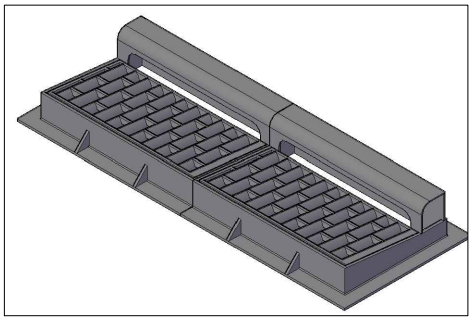

MODEL NUMBER R-3295-2
FOR DUAL INLET SITUATIONS

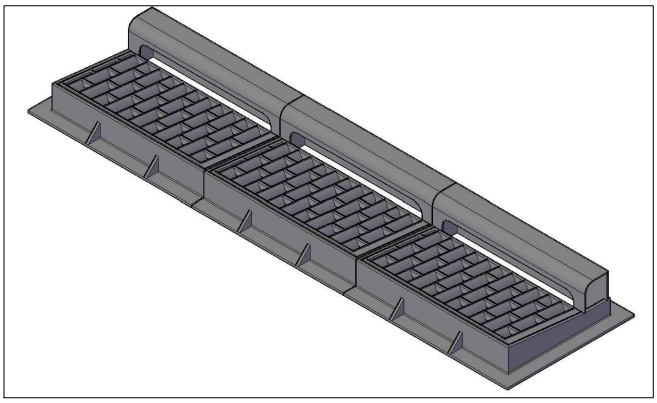

MODEL NUMBER R-3295-3 FOR THREE INLET SITUATIONS. ADD'L MIDDLE UNITS CAN BE ADDED FOR INCREASED LENGTH

STANDARD DETAIL NO SD-5	MODIFIED DI-1 (SHALLOW) SCALE: NONE	DATE: 01/2020

CITY OF WINCHESTER, VA
DEPARTMENT OF PUBLIC UTILTIES

MFG. BY NEENAH FOUNDRY
CAT. NO. R-1643
FRAME: COMPONENT NO. NXXXX-XXXX
LID: COMPONENT NO. NXXXX-XXXX
CAST GRAY IRON
ASTM A-48 CLASS 35B
FINISH - NO PAINT

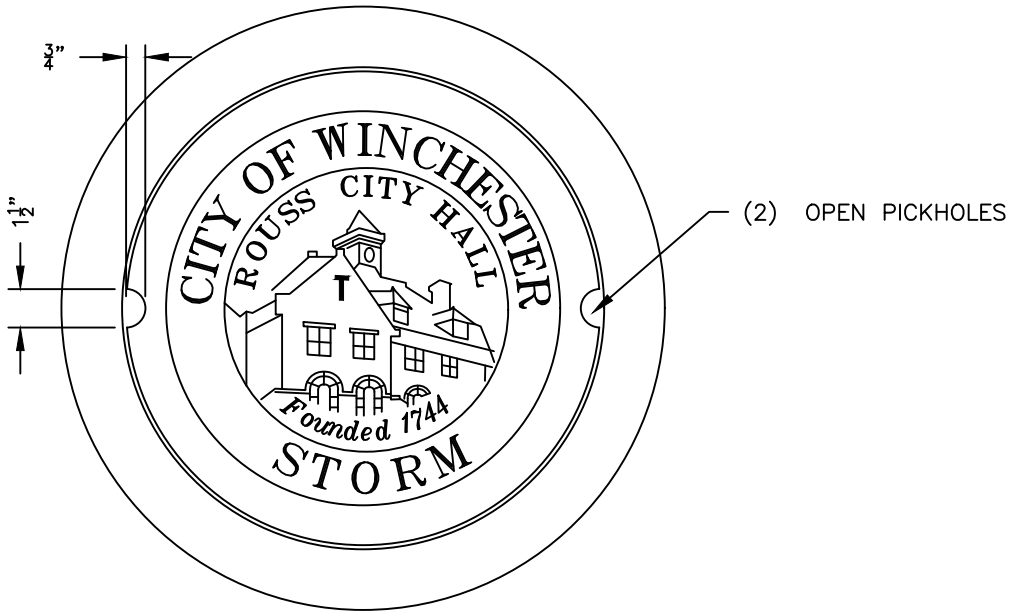

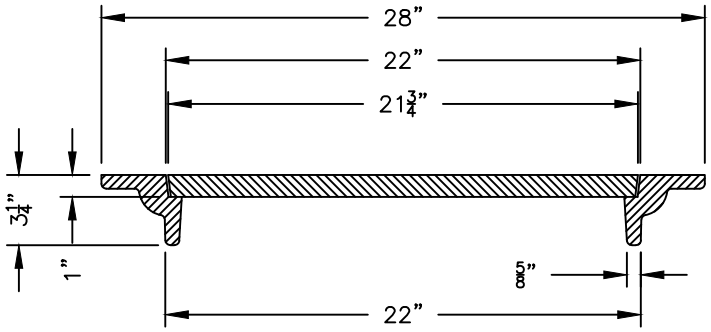

STANDARD DETAIL NO. SD-6	22" DI-3 LID AND FRAME SCALE: NONE	DATE: 01/2020

CITY OF WINCHESTER, VA
DEPARTMENT OF PUBLIC UTILITIES

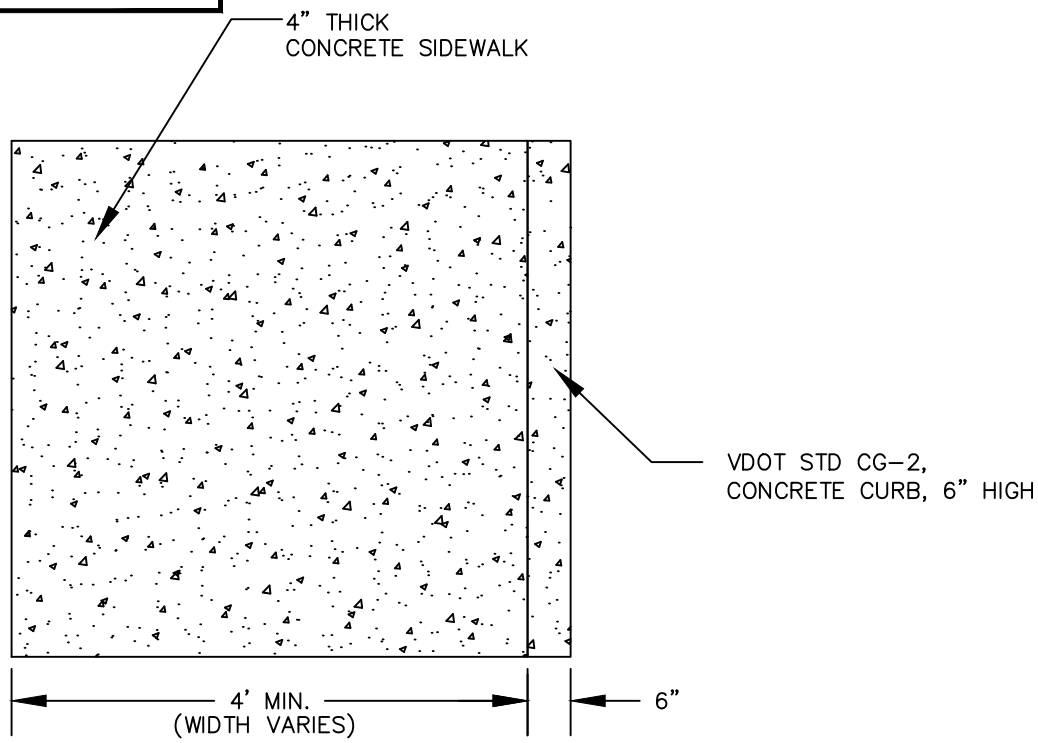

PLAN VIEW

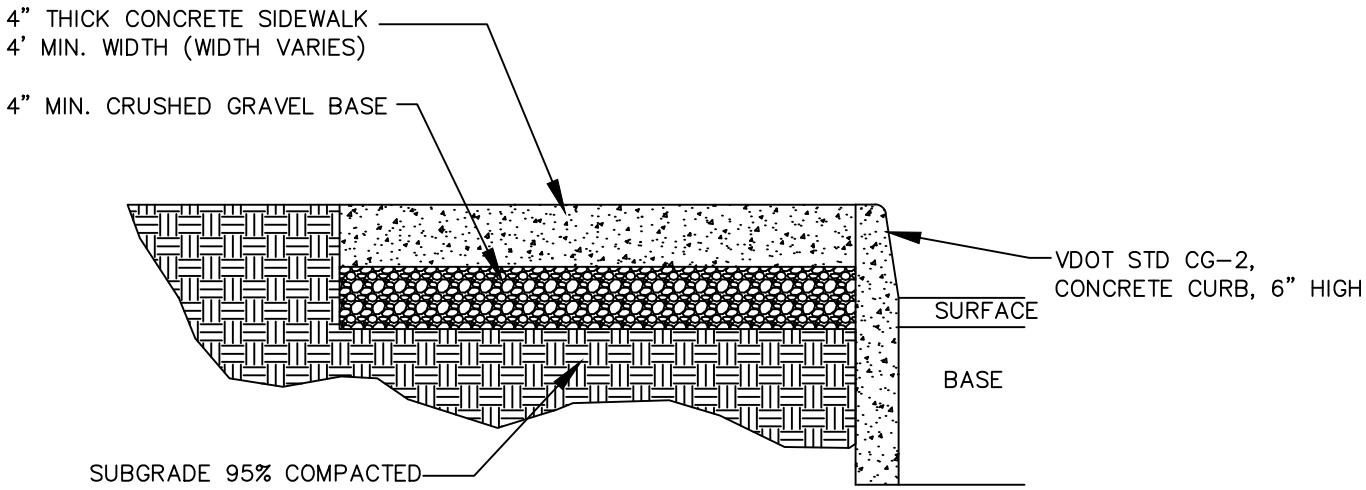

CROSS-SECTION

STANDARD DETAIL NO. SW-1	STANDARD CONCRETE SIDEWALK SCALE: NONE	DATE: 01/2020

CITY OF WINCHESTER, VA
DEPARTMENT OF PUBLIC UTILITIES

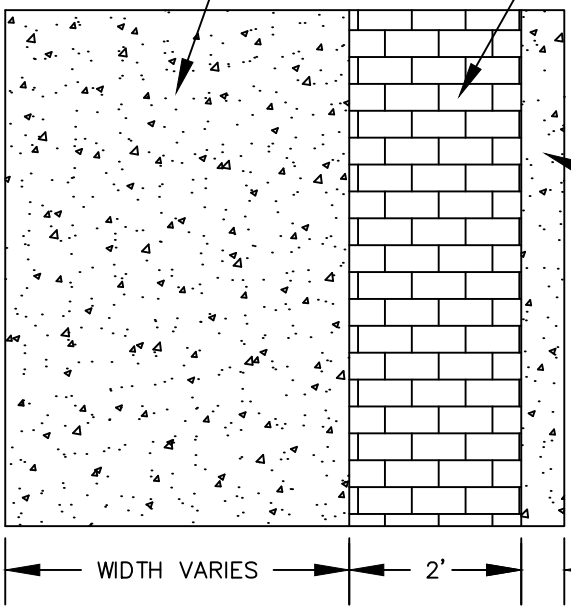

PLAN VIEW

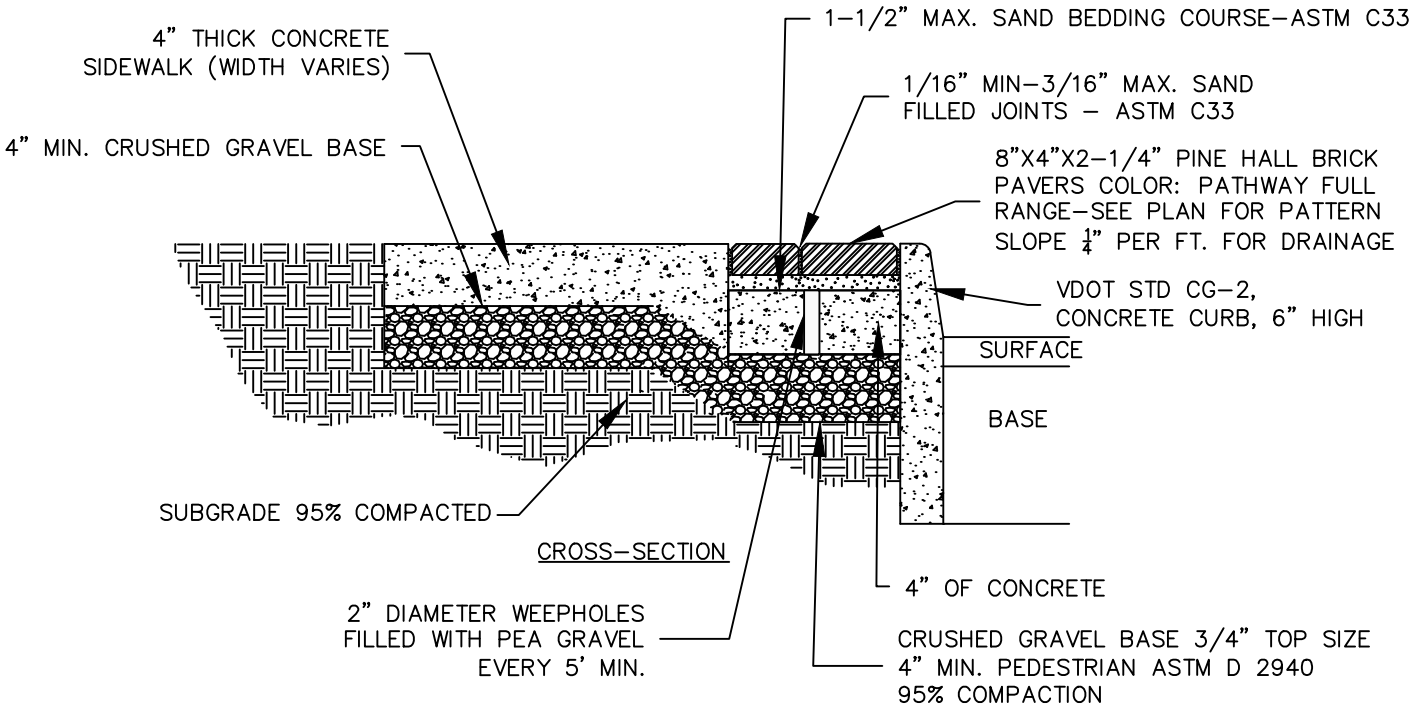

CROSS-SECTION

STANDARD DETAIL NO. SW-2	HISTORIC DISTRICT SIDEWALK SIX-FOOT WIDE AND ABOVE SCALE: NONE	DATE: 01/2020

CITY OF WINCHESTER, VA
DEPARTMENT OF PUBLIC UTILITIES

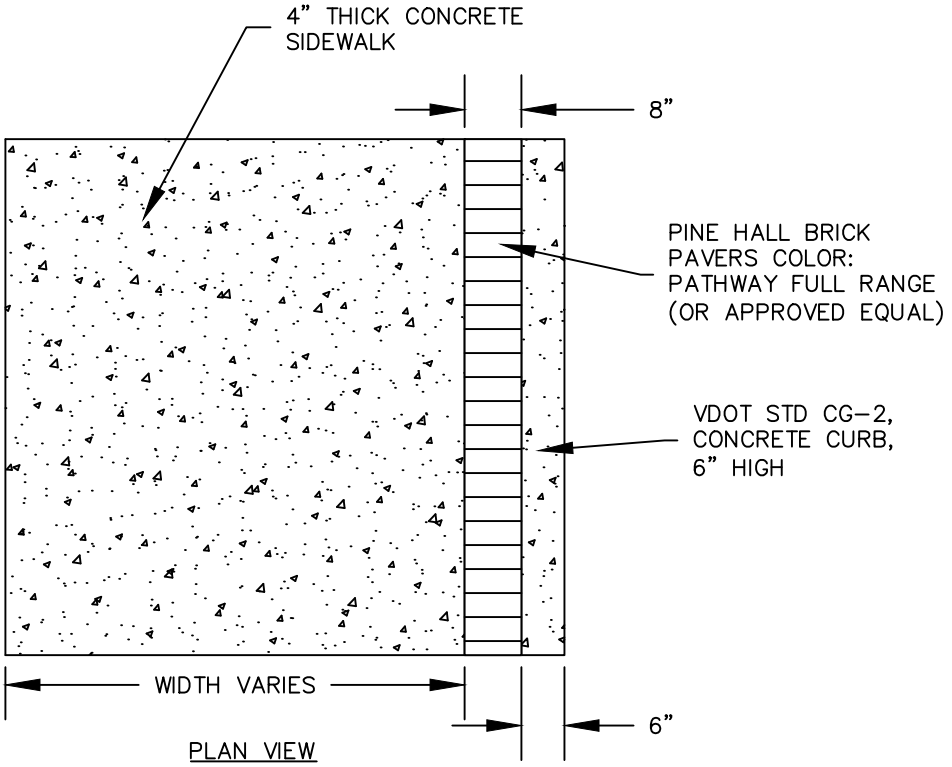

PLAN VIEW

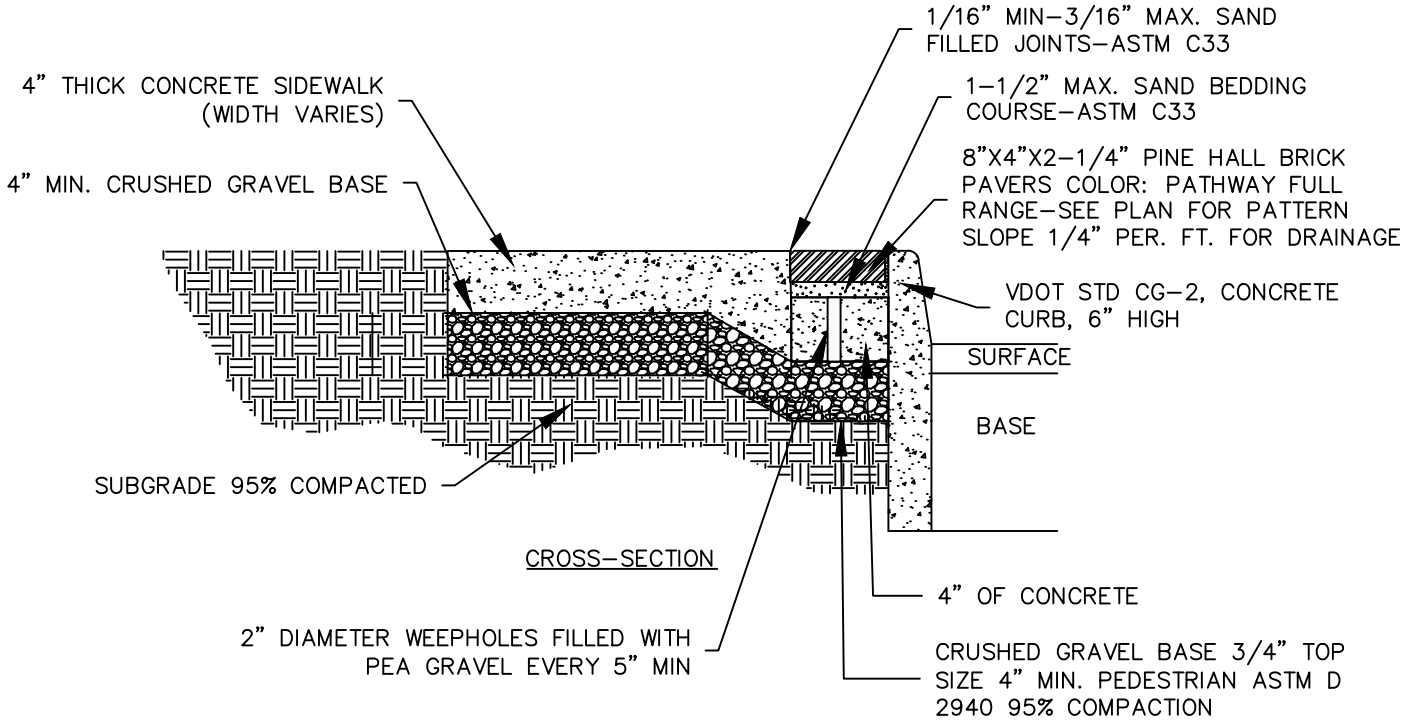

STANDARD DETAIL NO. SW-3	HISTORIC DISTRICT SIDEWALK LESS THAN SIX-FOOT WIDE SCALE: NONE	DATE: 01/2020

CITY OF WINCHESTER, VA
DEPARTMENT OF PUBLIC UTILITIES

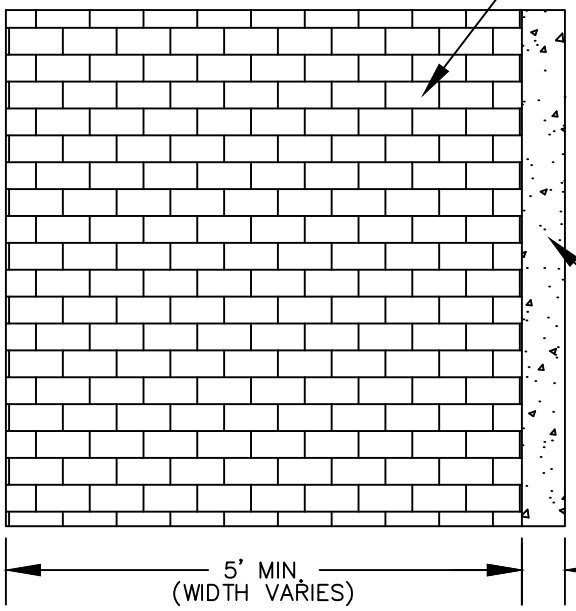

PLAN VIEW

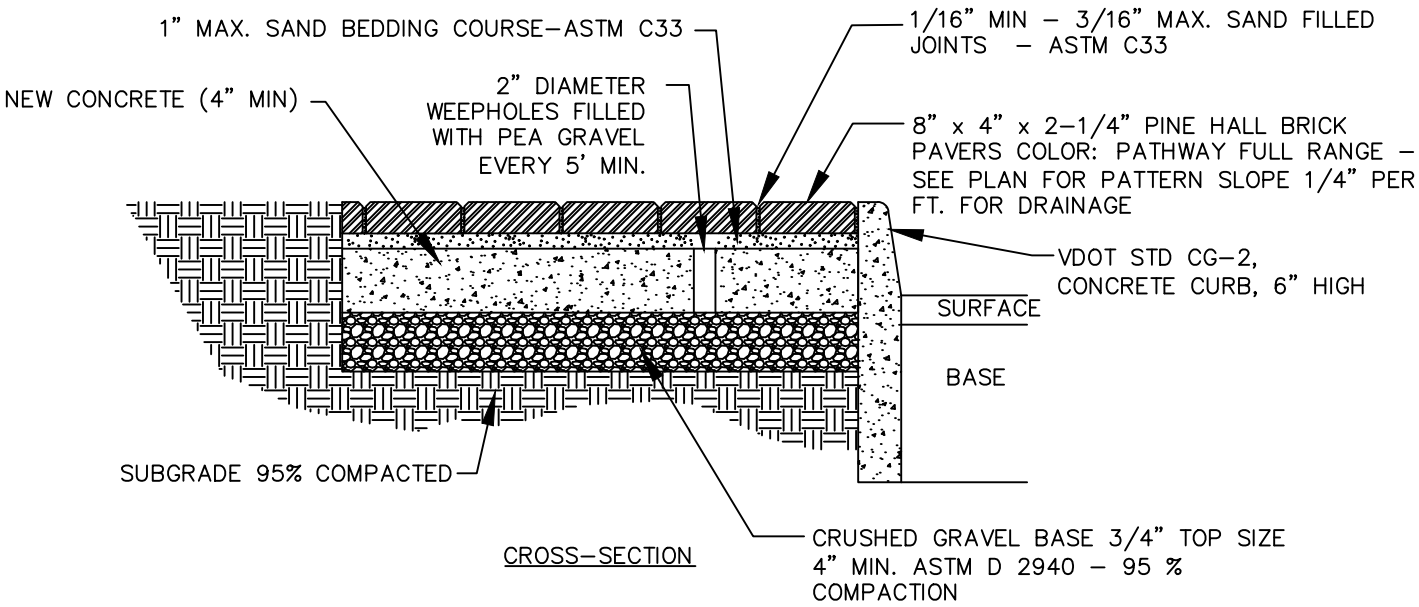

CROSS-SECTION

STANDARD DETAIL NO. SW-4	ALL BRICK SIDEWALK SCALE: NONE	DATE: 01/2020

CITY OF WINCHESTER, VA
DEPARTMENT OF PUBLIC UTILITIES

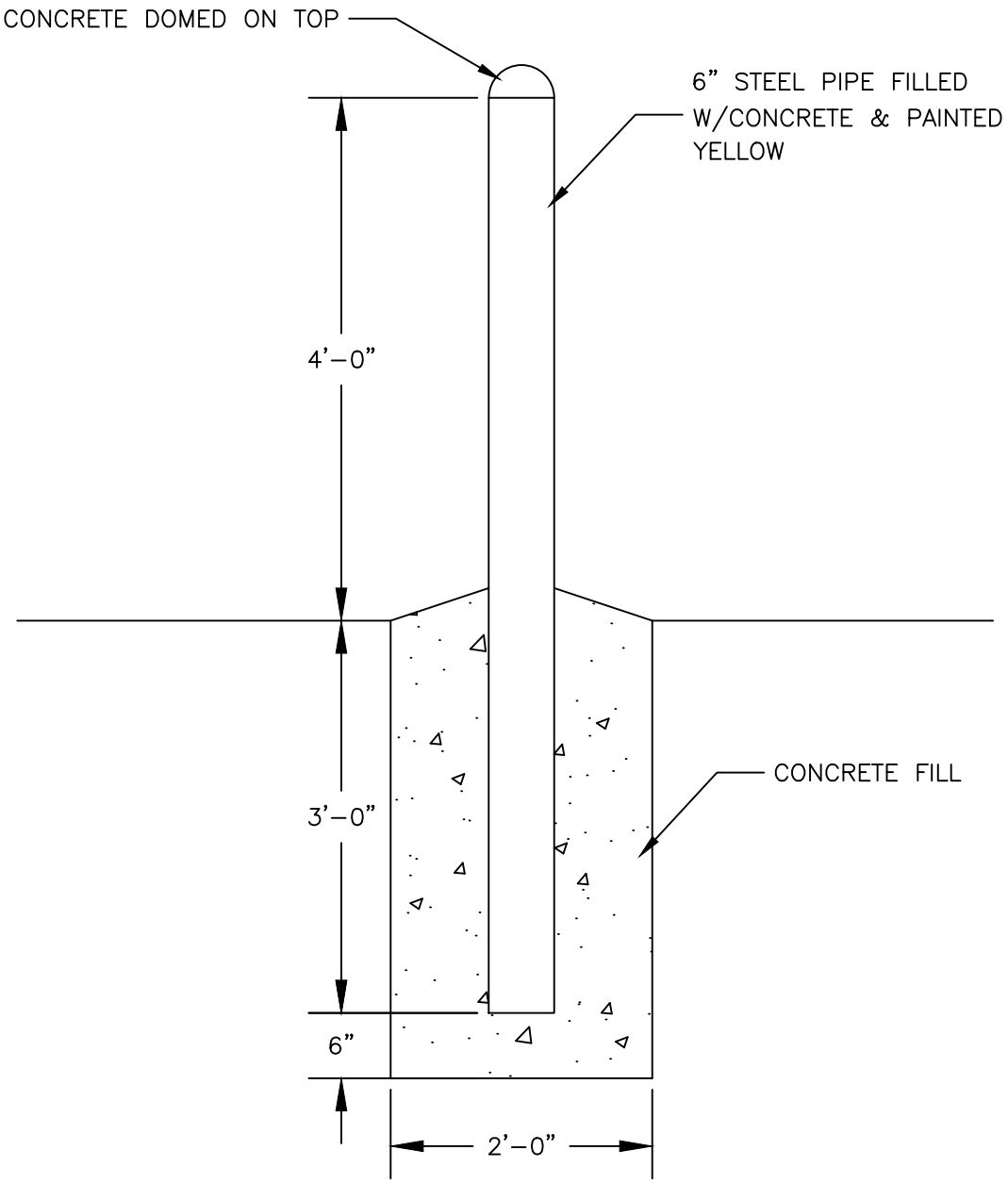

STANDARD DETAIL NO. SW-5	BOLLARD TYPE III SCALE: NONE	DATE: 01/2020

CITY OF WINCHESTER, VA
DEPARTMENT OF PUBLIC UTILITIES

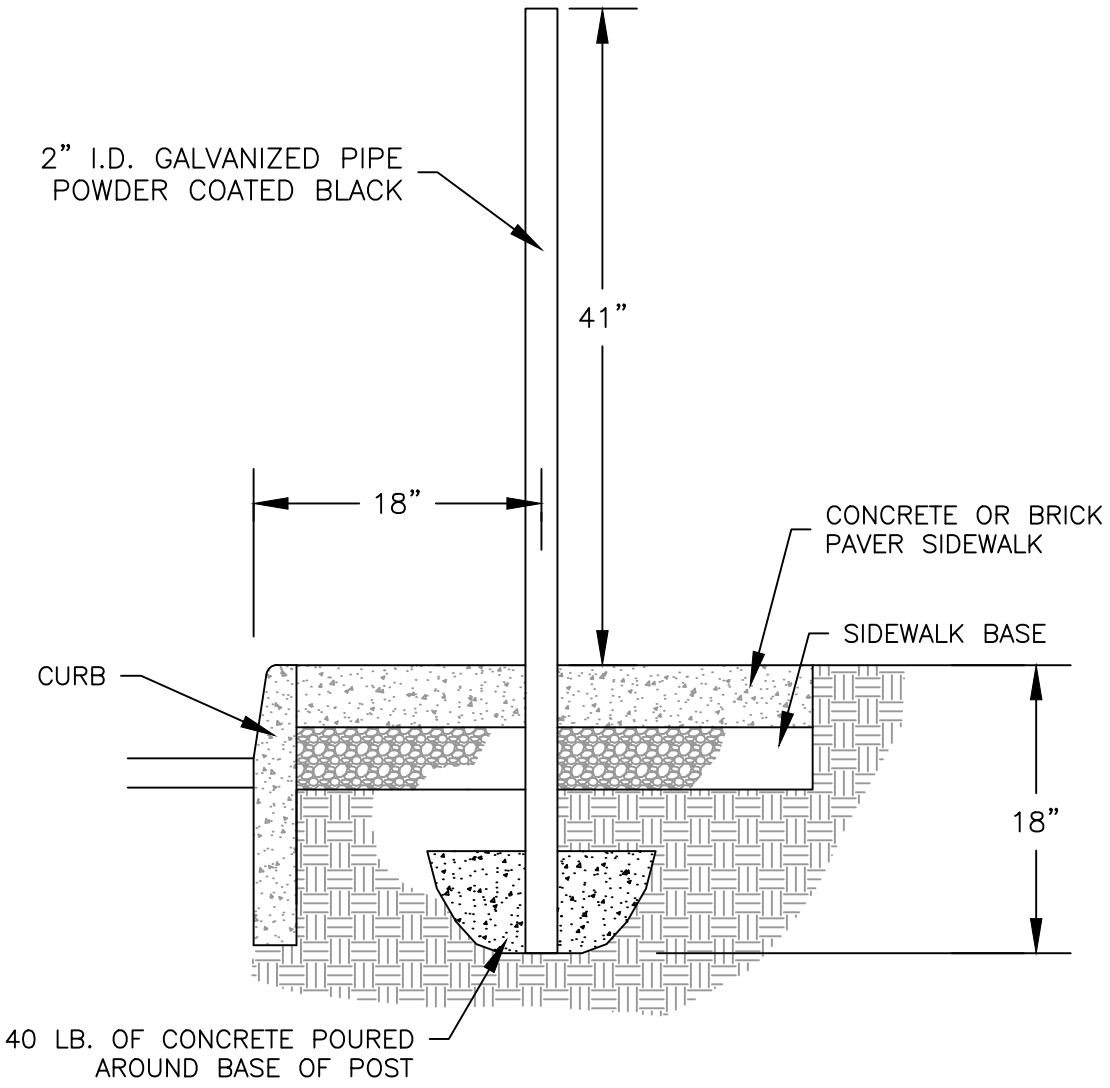

STANDARD DETAIL NO. MS-1	PARKING METER POST SCALE: NONE	DATE: 01/2020

CITY OF WINCHESTER, VA
DEPARTMENT OF PUBLIC UTILITIES

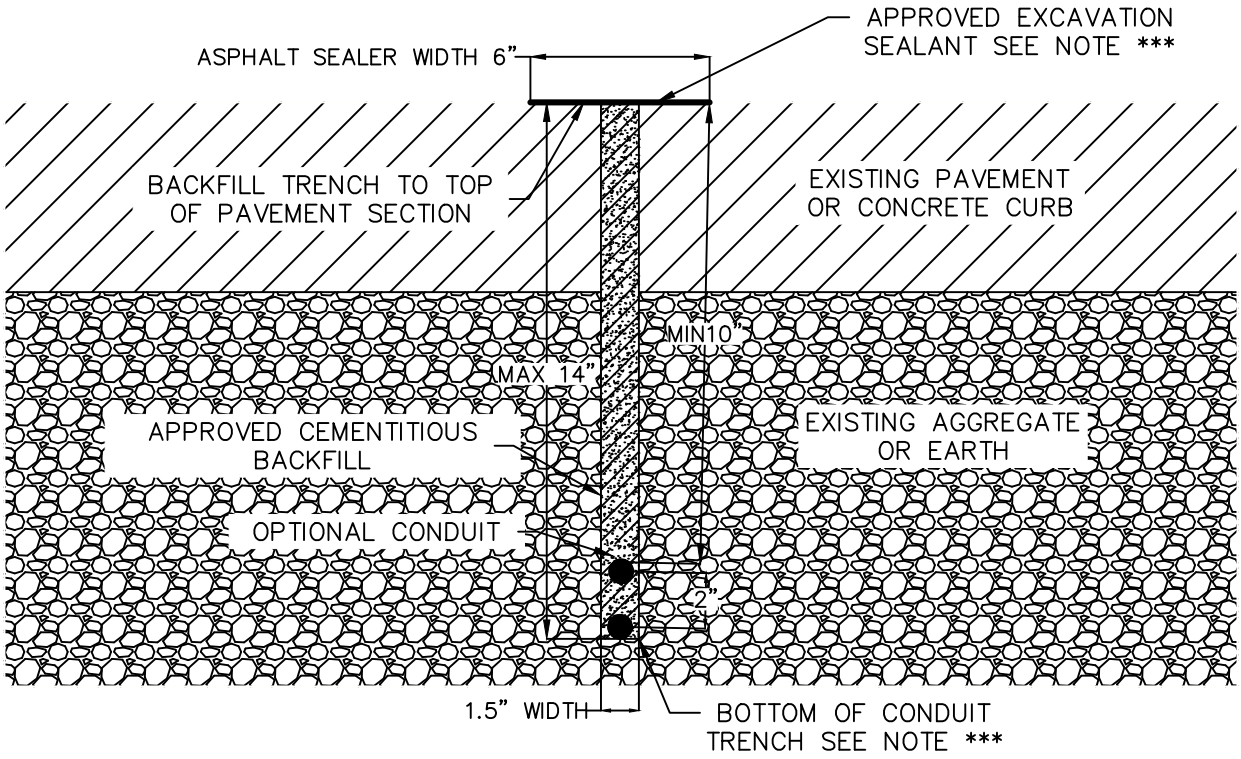

STANDARD DETAIL NO. MS-2	MICRO-TRENCH CONSTRUCTION FOR DRY UTILITIES	DATE: 01/2020

CITY OF WINCHESTER, VA
DEPARTMENT OF PUBLIC UTILITIES

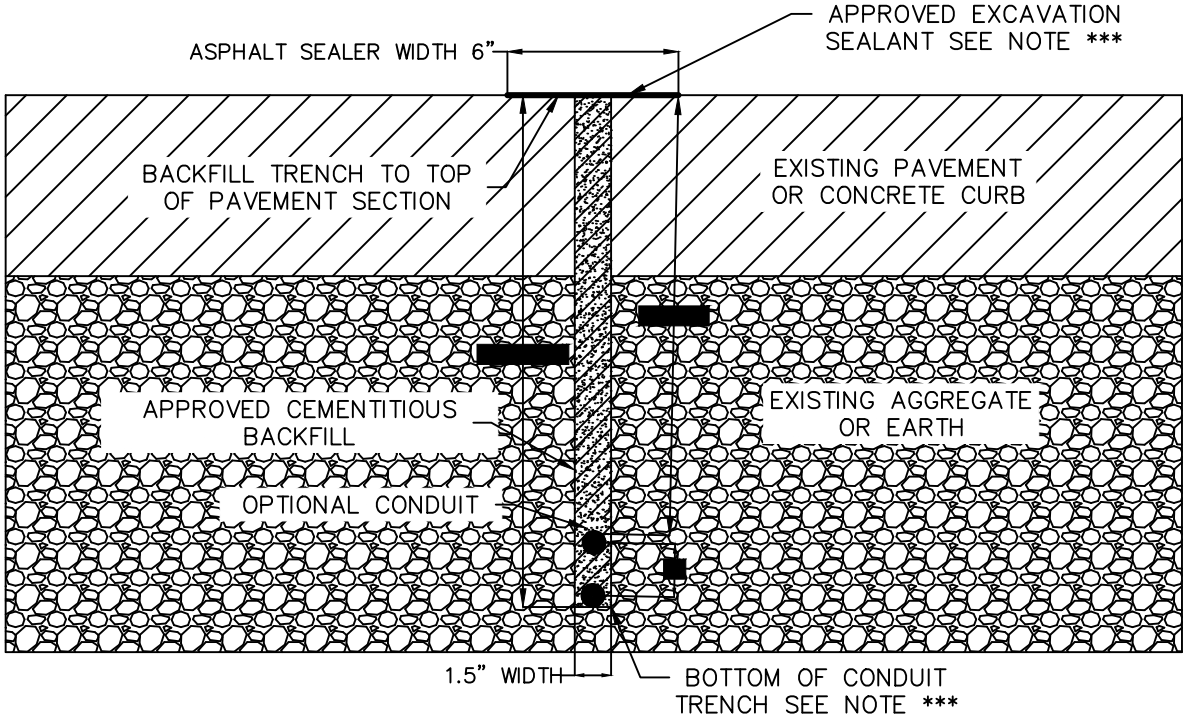

NOTES:

1. IT IS SOLELY THE CONTRACTORS RESPONSIBILITY TO FOLLOW ALL APPLICABLE SAFETY, BUILDING CODES, AND REGULATIONS DURING ALL PHASES OF CONSTRUCTION. THE CONTRACTOR IS RESPONSIBLE FOR VERIFYING ALL DIMENSIONS AND CONDITIONS RELATING TO EXISTING CONSTRUCTION AND/OR SITE DRAWINGS.

2. PAVEMENT CUTS SHALL BE STRAIGHT AND CLEAN. IT IS RECOMMENDED THAT SPALLS AND POTHOLES WITHIN 12 INCHES OF THE MICRO-TRENCH BE PREPARED BY TRENCHING TO FACILITATE STRAIGHT PAVEMENT CUTS. A CIRCULAR VACUUM OR EQUIVELANT EXCAVATOR WHICH CAN BE EFFCTIVELY EVACUATE CUTTINGS SHALL BE UTILIZED.

3. CEMENTITIOUS BACKFILL SHALL CONSIST OF APPROVED SKRINKAGE COMPENSATING HIGH EARLY STRENGTH REPAIR MORTAR WITH CORROSION INHIBITOR COMPARABLE TO CORBEL TRENCH FILL PRODUCED BY CORBEL COMMUNICATIONS INDUSTRIES, LLC. BACKFILL SHALL BE PROPERLY CONSOLIDATED TO PREVENT FORMATION OF AIR POCKETS.

4. BACKFILL TRENCH TO TOP OF PAVEMENT SECTION. CRACK SEALER SHALL CONSIS OF APPROVED MATERIALS COMPARABLE TO CRAFCO ROADSAVER 211 MEETING THE REQUIREMENTS OF FEDERAL SPECIFICATION SS-S-164 AND ASTM D6690 (AASHTO M324), TYPE I, "JOINT CRACK SEALANTS, HOT-APPLIED, FOR CONCRETE AND ASPHALT PAVEMENTS". CRACK SEALER SHALL BE APPLIED ACCORDING TO MANUFACTURERS RECCOMMENDATIONS OR THE REQUIREMENTS OF THE DRAWING, WHICHEVER IS MOST STRINGENT.

5. UPON COMPLETION OF MICRO-TRENCHING, ALL GRADES, PAVEMENT MARKINGS, AND STRUCTURES SHALL BE RESTORED TO EXISTING CONDITIONS MEETING APPLICABLE SERVICE REQUIREMENTS.

STANDARD DETAIL NO. MS-2	MICRO–TRENCH CONSTRUCTION FOR DRY UTILITIES	DATE: 01/2020