COMMONWEALTH OF VIRGINIA
BURN BUILDING PROP PROTOTYPE 1
CLASS A FUEL

1716 WOODSTOCK LANE
WINCHESTER, VIRGINIA 22602

OWNER

CITY OF WINCHESTER

231 East Piccadilly St., Suite 330
Winchester, Virginia 22601
Phone: (540) 662-2298

BURN BUILDING GRANT
FUNDS PROVIDED BY:

COMMONWEALTH of VIRGINIA
Department of Fire Programs

1005 Technology Park Drive
Glen Allen, VA 23059
Phone: (804) 371-0220

BUILDING CODE DATA

OWNER:

CITY OF WINCHESTER

JURISDICTION:

COUNTY OF FREDERICK, VIRGINIA

BUILDING CODE:

A. VIRGINIA UNIFORM STATEWIDE BUILDING CODE (VUSBC) 2012 EDITION
B. INTERNATIONAL BUILDING CODE (IBC) 2012 EDITION AS AMENDED BY VUSBC

USE GROUP/OCCUPANCY (IBC SECTION 304, 312, 1003):

MISCELLANEOUS USE GROUP (U):

	FLOOR AREA (SQ. FT.)	DENSITY (SQ. FT./PERSON)	OCCUPANTS
BUILDING, GROSS	1,742	50	34

*NOTE THE STRUCTURE IS DESIGNED AS A TRAINING PROP AND IS NOT HEATED OR AIR CONDITIONED AND DOES NOT INCLUDE RESTROOMS.

CONSTRUCTION TYPE (IBC SECTION 602).

(II B) NON-COMBUSTIBLE/UNPROTECTED

SPRINKLED:

NOT REQUIRED.

HIEGHT/AREA LIMITATIONS (IBC SECTION 503):

TOTAL:	ACTUAL	ALLOWABLE
A) AREA:	1,742 SQ. FT.	8,500 SQ. FT.
B) HEIGHT:	25'-2" (2 STORY)	55'-0" (2 STORY)

*NOTE: A CODE MODIFICATION REQUEST MUST BE SUBMITTED TO THE BUILDING OFFICIAL FOR CONSTRUCTION OF THIS NON-HABITABLE TRAINING PROP.

INDEX OF DRAWINGS

REFERENCE

T0.1	TITLE SHEET, BUILDING CODE DATA, LOCATION MAP
A0.1	ABBREVIATIONS, MATERIAL INDICATIONS, AND GRAPHIC SYMBOLS
A0.2	GENERAL NOTES
A0.3	GENERAL NOTES
A0.4a-c	PROJECT SPECIFICATIONS

ARCHITECTURAL

A1.0	SLAB ELEVATION PLAN (BASE BID)
A1.0a	SLAB ELEVATION PLAN (ALTERNATE)
A2.0	FIRST FLOOR PLAN (BASE BID)
A2.0a	FIRST FLOOR PLAN (ALTERNATE)
A2.1	SECOND FLOOR AND ROOF PLANS (BASE BID)
A2.1a	SECOND FLOOR AND ROOF PLANS (ALTERNATE)
A3.0	BUILDING ELEVATIONS (BASE BID)
A3.0a	BUILDING ELEVATIONS (ALTERNATE)
A3.1	BUILDING SECTIONS (BASE BID)
A3.1a	BUILDING SECTIONS (ALTERNATE)
A3.2	SIGNAGE AND RAILING DETAILS (BASE BID)
A3.2a	SIGNAGE AND RAILING DETAILS (ALTERNATE)
A3.3	SCUPPER SECTIONS AND DETAILS
A3.4	WALL SECTIONS AND DETAILS (BASE BID)
A3.4a	WALL SECTIONS AND DETAILS (ALTERNATE)
A3.5	WALL SECTIONS and THERMAL LINING DETAILS (BASE BID)
A3.5a	WALL SECTIONS and THERMAL LINING DETAILS (ALTERNATE)
A3.6	DOOR & WINDOW ELEVATIONS & DETAILS
A3.7	HEAD, SILL, & JAMB DETAILS & WINDOW, DOOR, & FINISH SCHEDULES (BASE BID)
A3.7a	HEAD, SILL, & JAMB DETAILS & WINDOW, DOOR, & FINISH SCHEDULES (ALTERNATE)

STRUCTURAL

S1.0	FOUNDATION PLAN AND DETAILS (BASE BID)
S1.0a	FOUNDATION PLAN AND DETAILS (ALTERNATE)
S1.1	SECOND FLOOR/LOW ROOF AND HIGH ROOF FRAMING PLANS (BASE BID)
S1.1a	SECOND FLOOR/LOW ROOF AND HIGH ROOF FRAMING PLANS (ALTERNATE)
S2.0	FOUNDATION SECTIONS
S2.1	CONCRETE COLUMN & BEAM SECTIONS, & TYPICAL DETAILS (BASE BID)
S2.1a	CONCRETE COLUMN & BEAM SECTIONS, & TYPICAL DETAILS (ALTERNATE)
S2.2	CONCRETE SLAB SECTIONS, MANHOLE, & CHOP OUT SECTIONS AND DETAILS (BASE BID)
S2.2a	CONCRETE SLAB SECTIONS, MANHOLE, & CHOP OUT SECTIONS AND DETAILS (ALTERNATE)
S2.3	CONCRETE STAIR PLAN, SECTIONS, AND DETAILS (BASE BID)
S2.3a	CONCRETE STAIR PLAN, SECTIONS, AND DETAILS (ALTERNATE)
S3.0	EXTERIOR STEEL STAIR ELEVATION, SECTIONS, AND DETAILS (BASE BID)
S3.1	REPELLING BAR ELEVATION, & DETAILS
S3.2a	EXTERIOR STEEL STAIR ELEVATION, SECTIONS, AND DETAILS (ALTERNATE ONLY)

ELECTRICAL

E1.0	ELECTRICAL PLANS, ABBREVIATIONS, & SYMBOLS (BASE BID)
E1.0a	ELECTRICAL PLANS, ABBREVIATIONS, & SYMBOLS (ALTERNATE)
E2.0	ELECTRICAL DETAILS, TMS INDICATOR PANEL, & PANEL BOARD SCHEDULE (BASE BID)
E2.0a	ELECTRICAL DETAILS, TMS INDICATOR PANEL, & PANEL BOARD SCHEDULE (ALTERNATE)
E3.0a	ELECTRICAL NOTES (ALTERNATE)

DRAWING SHEET REFERENCES:

XX.X=BASE BID
XX.Xa=BID ALTERNATE

LOCATION MAP

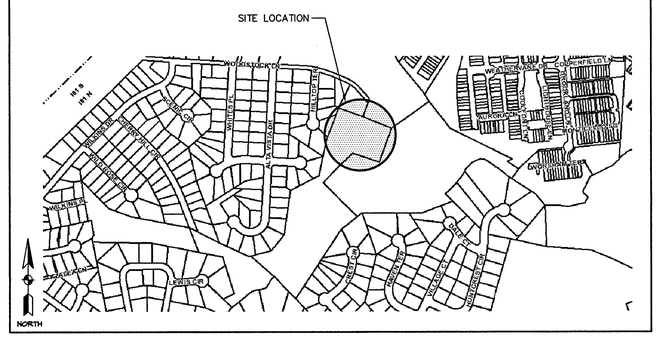

TITLE: TITLE SHEET, BUILDING CODE DATA, & LOCATION MAP

PROJECT: CITY OF WINCHESTER BURN BUILDING 1716 WOODSTOCK LANE WINCHESTER, VIRGINIA 22602

PAINTER-LEWIS, P.L.C.
817 CEDAR CREEK GRADE, SUITE #120
WINCHESTER, VIRGINIA 22601
TELEPHONE: (540) 662-5792
FACSIMILE: (540) 662-5793
EMAIL: office@painterlewis.com
CONSULTING ENGINEERS

REVISIONS

NO.	DATE

COMMONWEALTH OF VIRGINIA
TIMOTHY G. PAINTER
Lic. No. 018260
08/15/16
PROFESSIONAL ENGINEER

DRAWN BY: RJD
JOB NO.: 1511018
DATE: 08-15-2016
SCALE: AS NOTED
SHEET: T0.1

ABBREVIATIONS

@	AT
ADJ	ADJACENT, ADJUSTABLE
AFF	ABOVE FINISHED FLOOR
AGG	AGGREGATE
ANCH	ANCHOR, ANCHORAGE
ANOD	ANODIZED
APP'D	APPROVED
ARCH	ARCHITECTURAL
ASSOC	ASSOCIATED
AUTO	AUTOMATIC
AUX	AUXILIARY
AVG	AVERAGE
BLDG	BUILDING
BLK	BLOCK
BP	BENT PLATE
BTM	BOTTOM
BR	BURN ROOM
CEM	CEMENT
CHK'D	CHECKED
CJ	CONTROL JOINT
℄	CENTER LINE
CLG	CEILING
CLR	CLEAR
CMU	CONCRETE MASONRY UNIT
COL	COLUMN
CONC	CONCRETE
CONT	CONTINUOUS
CONTR	CONTRACTOR
COORD	COORDINATE
CTR	CENTER
D	DEEP (DEPTH)
DBL	DOUBLE
DEP	DEPRESSION, DEPRESS
DET	DETAIL
DIA	DIAMETER
DIM	DIMENSION
DN	DOWN
DR	DOOR
DWG(S)	DRAWING(S)
DWL	DOWEL
EA	EACH
ELEV	ELEVATION
ELECT	ELECTRICAL
ENCLOS	ENCLOSURE
EQ	EQUAL
EQUIP	EQUIPMENT
EXP	EXPANSION, EXPOSED
EJ	EXPANSION JOINT
EXT	EXTERIOR
FDN	FOUNDATION
FIN	FINISH
FLR	FLOOR
FLEX	FLEXIBLE
FRT	FIRE RETARDANT TREATED
FT(')	FEET (FOOT)
FTG	FOOTING
GA	GAUGE
GALV	GALVANIZED
GC	GENERAL CONTRACTOR
GEN	GENERAL
H	HIGH
HDW	HARDWARE
HM	HOLLOW METAL
HORIZ	HORIZONTAL
HP	HIGH POINT
HT(H)	HEIGHT
IN(")	INCH
INFO	INFORMATION
INSUL	INSULATE, INSULATION
INT	INTERIOR
JT	JOINT
L	LENGTH
LB(S)	POUND, POUNDS
LLV	LONG LEG VERTICAL
MATL	MATERIAL
MAX	MAXIMUM
MECH	MECHANICAL
MED	MEDIUM
MANUF	MANUFACTURER
MIN	MINIMUM
MISC	MISCELLANEOUS
MO	MASONRY OPENING
MTD	MOUNTED
MTG HT	MOUNTING HEIGHT
MTL	METAL
N/A	NOT APPLICABLE
NEC	NECESSARY
NIC	NOT IN CONTRACT
NTS	NOT TO SCALE
NO.#	NUMBER
NOM	NOMINAL
OC	ON CENTER
OD	OUTSIDE DIAMETER
OH	OVERHEAD
OPENG	OPENING
OPP	OPPOSITE
PART	PARTITION
PL	PLATE
PLMBG	PLUMBING
PR	PAIR
PREFAB	PREFABRICATED
PROV	PROVIDE
PSF	POUNDS PER SQUARE FOOT
PSI	POUNDS PER SQUARE INCH
PT	PAINT, POINT
PVC	POLYVINYL CHLORIDE
R	RADIUS, RISER
REF	REFLECTED, REFERENCE, REFER
REINF	REINFORCEMENT
REQ	REQUIRE, REQUIRED
REV	REVISE, REVISION
RH	RIGHT HAND
RO	ROUGH OPENING
RM	ROOM
SCHED	SCHEDULE
SEAL	SEALANT
SHT	SHEET
SIM	SIMILAR
SPEC(S)	SPECIFICATION
SQ	SQUARE
SS	STAINLESS STEEL
STD	STANDARD
STL	STEEL
STRUC	STRUCTURAL (STRUCTURE)
SUSP	SUSPEND, SUSPENDED
T	TOP, THICK
T&B	TOP AND BOTTOM
TEMP	TEMPERED, TEMPORARY, TEMPERATURE
THK	THICK, THICKNESS
THRU	THROUGH
TS	STRUCTURAL STEEL TUBE OR TOP OF STEEL
TYP	TYPICAL
UL	UNDERWRITERS LABORATORIES
UNO	UNLESS NOTED OTHERWISE
VERT	VERTICAL
V.I.F.	VERIFY IN FIELD
WT	WEIGHT
WWF	WELDED WIRE FABRIC
W	WIDTH, WIDE
W/	WITH
W/I	WITHIN
W/O	WITHOUT
WP	WORKING POINT

MATERIAL INDICATIONS

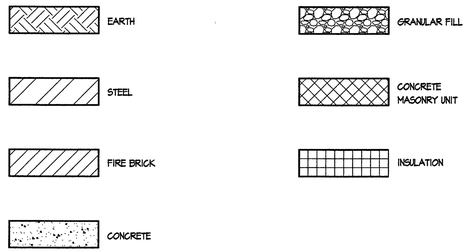

GRAPHIC SYMBOLS

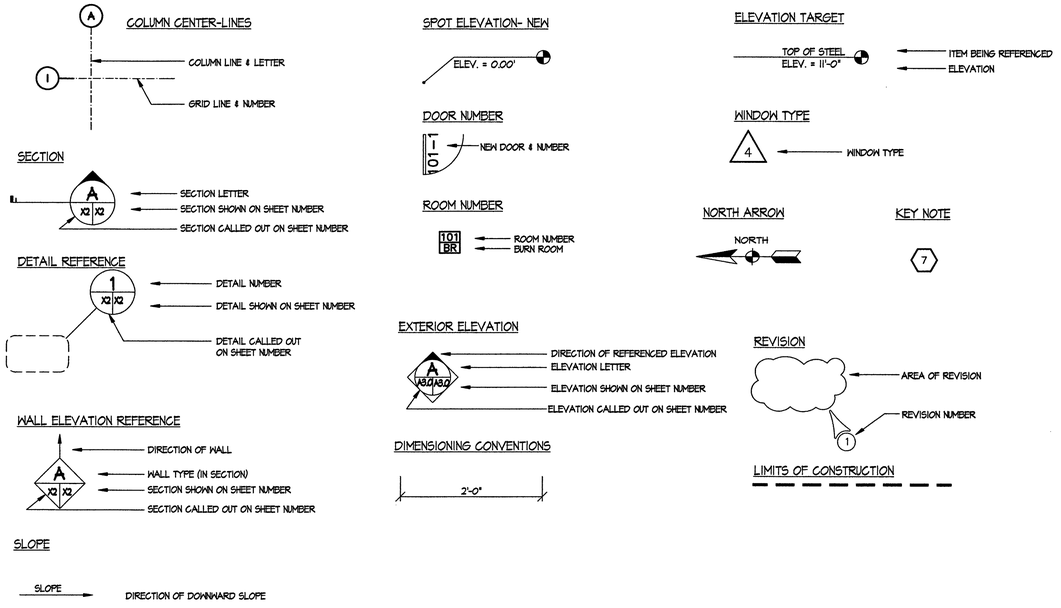

VIRGINIA DEPARTMENT OF FIRE PROGRAMS

CITY OF WINCHESTER VIRGINIA

TITLE:
ABBREVIATIONS, MATERIAL INDICATIONS, & GRAPHIC SYMBOLS

PROJECT:
CITY OF WINCHESTER
BURN BUILDING
1716 WOODSTOCK LANE
WINCHESTER, VIRGINIA 22602

PAINTER-LEWIS, P.L.C.
817 CEDAR CREEK GRADE, SUITE #120
WINCHESTER, VIRGINIA 22601
TELEPHONE: (540) 662-5792
FACSIMILE: (540) 662-5793
EMAIL: office@painterlewis.com
CONSULTING ENGINEERS

REVISIONS

NO.	DATE

COMMONWEALTH OF VIRGINIA
TIMOTHY G. PAINTER
Lic. No. 018260
08/15/16
PROFESSIONAL ENGINEER

DRAWN BY: RJD
JOB NO.: 1511018
DATE: 08-15-2016
SCALE: AS NOTED
SHEET: A0.1

GENERAL NOTES:

GENERAL:

1. WORK PERFORMED SHALL COMPLY WITH THE FOLLOWING:

   A. THE VIRGINIA UNIFORM STATEWIDE BUILDING CODE (VUSBC); 2012 EDITION.

   B. THE INTERNATIONAL BUILDING CODE (IBC); 2012 EDITION AS AMENDED BY THE VUSBC.

   C. ALL APPLICABLE STATE AND LOCAL CODES, ORDINANCES AND REGULATIONS.

2. MAINTAIN UTILITY EQUIPMENT IN SERVICE AND PROTECT AGAINST DAMAGE DURING CONSTRUCTION. DO NOT INTERRUPT EXISTING UTILITIES SERVING OCCUPIED OR OPERATION FACILITIES, EXCEPT WHEN AUTHORIZED IN WRITING BY THE BUILDING MANAGER AND AUTHORITIES HAVING JURISDICTION. IF REQUIRED BY THE OWNER, AT THE CONTRACTOR'S EXPENSE, PROVIDE TEMPORARY SERVICES DURING INTERRUPTIONS TO EXISTING UTILITIES. PROVIDE NO LESS THAT 72 HOURS PRIOR NOTICE TO THE OWNER AND THE BUILDING MANAGER IF SHUTDOWN OF SERVICE IS REQUIRED.

DESIGN LOADS:

1. BUILDING CLASSIFICATION CATEGORY---------- II

2. GROUND SNOW, Pg---------- 35 PSF
   - FLAT ROOF SNOW LOAD, Pf---------- 30 (MIN.)
   - SNOW EXPOSURE FACTOR, Ce---------- 0.9
   - SNOW THERMAL FACTOR, Ct---------- 1.2
   - SNOW IMPORTANCE FACTOR, I---------- 1.0

3. WIND SPEED---------- 115 MPH
   - EXPOSURE---------- C*
   - IMPORTANCE FACTOR, ---------- 1.0
   - INTERNAL PRESSURE COEFFICIENT---------- ±0.18

4. COMPONENTS AND CLADDING (A = 10 SQ.FT.):
   ROOF WIND LOADING:
   - ZONE 1---------- +13.0,-32.1 PSF
   - ZONE 2---------- +13.1,-53.9 PSF
   - ZONE 3---------- +13.1,-81.1 PSF

   WALL WIND LOADING:
   - ZONE 4---------- +32.1,-39.8 PSF
   - ZONE ---------- +32.1,-43.1 PSF

5. LIVE LOADS:

	UNIFORM
FLAT AND SLOPED ROOFS	100 PSF
FLOORS	100 PSF
STAIRS	100 PSF
*MINIMUM CONCENTRATED LOAD OF 300 POUNDS ON STAIR TREADS (ON AREA OF 4 SQUARE INCHES)	
EXTERIOR APRON	125 PSF

6. SEISMIC DESIGN:
   - SEISMIC IMPORTANCE FACTOR, I---------- 1.0
   - MAPPED SPECTRAL RESPONSE ACCELERATION Ss---------- 0.131
   - MAPPED SPECTRAL RESPONSE ACCELERATION S1---------- 0.055
   - SEISMIC USE GROUP---------- I
   - SITE SOIL CLASS---------- D
   - SPECTRAL COEFFICIENT, Sds---------- 0.190
   - SPECTRAL COEFFICIENT, Sd1---------- 0.087
   - SEISMIC DESIGN CATEGORY---------- B
   - BASIC STRUCTURAL SYSTEM---------- MOMENT FRAME
   - SEISMIC FORCE RESISTING SYSTEM---------- G (ASCE 7-05 TABLE 12.2-1)
   - DESIGN BASE SHEAR---------- 16.6 KIPS
   - SEISMIC RESPONSE COEFFICIENT Cs---------- 0.047
   - RESPONSE MODIFICATION COEFFICIENT R---------- 5
   - SEISMIC ANALYSIS---------- EQUIV. LATERAL FORCE PROCEDURE

ARCHITECTURAL:

1. UNLESS NOTED OTHERWISE, ALL PARTITIONS ARE DIMENSIONED TO THE FACE OF CMU.

2. THE DATUM ELEVATION IS DEVELOPED FROM THE SITE PLAN. THE BUILDING DATUM ELEVATION SHALL BE USED FOR ROUGH GRADING PURPOSES AND AS A REFERENCE POINT FOR BUILDING ELEVATIONS. SEE SHEET A1.0 FOR MAIN LEVEL SLAB-ON-GRADE CONSTRUCTION.

3. THE BASELINE DATUM ELEVATION IS 667.25 FEET WHICH EQUALS A BUILDING DATUM ELEVATION OF (0'-00").

4. ALL BUILDING ELEVATIONS ARE SHOWN IN THE PLANS AS +X.XX OR -X.XX IN FEET RELATIVE TO THE DATUM.

FOUNDATIONS:

1. CONTRACTOR SHALL NOTIFY "MISS UTILITY" AT PHONE NUMBER 811 PRIOR TO BEGINNING EXCAVATION FOR LOCATION OF UNDERGROUND UTILITIES.

2. EXTERIOR FOOTINGS AND COLUMN FOOTINGS WERE DESIGNED TO BEAR ON UNDISTURBED SOIL BELOW THE FROST LINE A MINIMUM OF 2'-0" BELOW EXISTING GRADE.

3. MINIMUM SOIL BEARING PRESSURE IS ASSUMED TO BE 3000 PSF AND THE OWNER SHALL EMPLOY A GEOTECHNICAL ENGINEER TO VERIFY THAT THIS ALLOWABLE SOIL BEARING PRESSURE IS ATTAINABLE. IF THIS NOT ATTAINABLE, THE OWNER/CONTRACTOR SHALL CONTACT THE ENGINEER FOR REDESIGN.

4. ALL COLUMN FOOTINGS SHALL BE CENTERED UNDER COLUMN CENTER LINES UNLESS NOTED OTHERWISE.

5. ALL UTILITIES WHICH CROSS FOOTING MUST PASS ABOVE TURNDOWN SLAB THROUGH THE FOUNDATION WALL. SLEEVE, PATCH, AND PARGE STEP FOOTING AS REQUIRED. REINFORCING SHALL BE CONTINUOUS AT ALL FOOTING STEPS.

6. THE CONCRETE SLAB-ON-GRADE SHALL BEAR ON A MINIMUM OF 6" COMPACTED VDOT #57 STONE. WHERE REQUIRED, SOIL UNDER SLAB SHALL BE COMPACTED TO AT LEAST 95% OF MAXIMUM DENSITY AS DETERMINED BY ASTM METHOD D-698 (STANDARD PROCTOR).

CONCRETE:

1. CONCRETE FOR FOOTINGS SHALL HAVE A MINIMUM COMPRESSIVE STRENGTH OF 3000 PSI AT 28 DAYS AND A MAXIMUM WATER/CEMENT RATIO OF 0.5.

2. CONCRETE FOR SLABS, BEAMS, COLUMNS, AND OTHER ABOVE GROUND CONSTRUCTION SHALL HAVE A MINIMUM COMPRESSIVE STRENGTH OF 5000 PSI AT 28 DAYS AND A MAXIMUM WATER/CEMENT RATIO OF 0.40 UNLESS NOTED OTHERWISE.

3. ALL CONCRETE SHALL BE MIXED, PLACED AND TESTED IN ACCORDANCE WITH THE LATEST EDITION OF ACI 318.

4. ALL CONCRETE SHALL HAVE A SLUMP OF 4" ± 1" UNLESS NOTED OTHERWISE.

5. CONCRETE MIX DESIGNS SHALL BE SUBMITTED TO THE STRUCTURAL ENGINEER OF RECORD FOR APPROVAL PRIOR TO USE.

6. ALL CONCRETE TO BE POURED IN COLD WEATHER, AS DEFINED IN SECTION 1.1 OF ACI 306R, COLD WEATHER CONCRETING, SHALL FULLY COMPLY WITH ACI 306.1, STANDARD SPECIFICATIONS FOR COLD WEATHER CONCRETING, AND ACI 306R.

7. ALL CONCRETE TO BE POURED IN HOT WEATHER, AS DEFINED IN SECTION 1.2 OF ACI 305R, HOT WEATHER CONCRETING, SHALL FULLY COMPLY WITH ACI 305.1.2, STANDARD SPECIFICATION FOR HOT WEATHER CONCRETING, AND ACI 305R.

8. ALL REINFORCING BARS SHALL BE ASTM A-615, GRADE 60, U.N.O.

   A. REINFORCING STEEL: ASTM A615/A615M, 60 KSI YIELD GRADE DEFORMED BILLET BARS, UNCOATED FINISH.
   B. WELDED PLAIN WIRE FABRIC: ASTM A185 IN FLAT SHEETS UNFINISHED.
   C. CHAIRS, BOLSTERS, BAR SUPPORTS, SPACERS: SIZED AND SHAPED FOR SUPPORT OF REINFORCING; PLASTIC TIPPER OR NON-CORRODING FOR SUPPORTS IN SLABS FORMING FINISHED CEILING OR WHERE SUPPORTS ARE EXPOSED TO WEATHER.

9. ALL CONCRETE REINFORCING SHALL BE DETAILED AND CONSTRUCTED PER ACI 318.

10. CONTRACTOR SHALL SUBMIT REINFORCING SHOP DRAWINGS FOR CONCRETE REINFORCING STEEL FOR APPROVAL.

11. ALL CONCRETE REINFORCING STEEL SHALL HAVE CORNER OF "L" BARS OF THE SAME DIAMETER AT ALL CORNERS AND CHANGES IN DIRECTION. CORNER AND "L" BARS SHALL LAP CONTINUOUS BARS AT A MINIMUM OF 48 TIMES THE NOMINAL BAR DIAMETER ON BOTH ENDS.

12. ALL CONCRETE SLABS-ON-GRADE SHALL BE REINFORCED WITH WELDED WIRE FABRIC OF THE SIZE INDICATED ON THE PLANS AND SHALL BE PLACED OVER 6 MIL VAPOR BARRIER UNLESS SHOWN OTHERWISE ON DRAWINGS.

13. SAW CUTTING CONTROL JOINTS SHALL BE PERFORMED AS SOON AS THE CONCRETE SLAB-ON-GRADE HAS CURED ENOUGH TO SUPPORT THE CUTTING MACHINE WITHIN FIRST FOUR HOURS OF CURING.

14. SLABS-ON-GRADE, INCLUDING THE EXTERIOR APRON SLAB, SHALL BE AIR ENTRAINED CONCRETE AND REINFORCED WITH WELDED WIRE FABRIC OF THE SIZE INDICATED ON THE PLANS PLACED ON CONCRETE BLOCKS. AIR ENTRAINMENT FOR SLABS SHALL BE 6% BY VOLUME ± 1%.

15. ALL CONCRETE EXCEPT FOOTINGS SHALL BE AIR-ENTRAINED 6% BY VOLUME ± 1% UNLESS SHOWN OTHERWISE ON DRAWING.

16. CONCRETE PROTECTION FOR STEEL REINFORCEMENT OF CAST-IN-PLACE CONCRETE SHALL BE AS SPECIFIED BELOW.

TYPE OF STRUCTURE	MINIMUM CLEAR COVER (UNLESS NOTED OTHERWISE IN THESE CONSTRUCTION DOCUMENTS)
SLABS AND STAIR SLABS	2" Typical (Minimum Cover of ¾")
BEAMS	2"
COLUMNS AND PIERS	2" TO VERTICAL BARS & 1½" TO TIES
FOOTINGS AND OTHER EARTH FORMED CONCRETE	3"

17. INSERT, EMBEDDED COMPONENTS, AND OPENINGS
   A. PROVIDE FORMED OPENINGS WHERE REQUIRED FOR WORK TO BE EMBEDDED IN AND PASSING THROUGH CONCRETE MEMBERS.
   B. COORDINATE WORK OF OTHER SECTIONS IN FORMING AND SETTING OPENINGS, SLOTS, RECESSES, CHASES, SLEEVES, BOLTS, ANCHORS, AND OTHER INSERTS.
   C. INSTALL CONCRETE ACCESSORIES STRAIGHT, LEVEL, AND PLUMB, AS REQUIRED.

18. PLACING CONCRETE
   A. SEPARATE SLABS-ON-GRADE FROM VERTICAL SURFACES WITH ½ INCH THICK JOINT FILLER, EXTENDED FROM BOTTOM OF SLAB TO WITHIN ½ INCH OF FINISHED SLAB SURFACE.

19. FLOOR FINISHING
   A. FINISH CONCRETE FLOOR SURFACES IN ACCORDANCE WITH ACI 301 AND ACI 302.1.
   B. UNIFORMLY SPREAD, SCREED, AND FLOAT CONCRETE.
   C. APPLY LIGHT BROOM FINISH TO SURFACES REMAINING EXPOSED TO VIEW IN FINISHED CONSTRUCTION.
   D. MAINTAIN SURFACE FLATNESS, WITH MAXIMUM VARIATION OF ½ INCH IN 10 FEET.

20. FORMED SURFACES
   A. PROVIDE CONCRETE SURFACES TO BE LEFT EXPOSED SUCH AS CONCRETE COLUMNS AND BEAMS WITH SMOOTH RUBBED FINISH.

21. SPECIAL INSPECTION SHALL BE REQUIRED FOR THE CAST-IN-PLACE CONCRETE MATERIALS AND INSTALLATION, INCLUDING BUT NOT LIMITED TO REINFORCEMENT, BOLTS, FORMWORK, PLACEMENT, CURING AND STRENGTH, AS IDENTIFIED IN THE SCHEDULE OF SPECIAL INSPECTIONS.

   INSPECTIONS MUST INCLUDE, BUT ARE NOT LIMITED TO:

   A. FIELD INSPECTIONS: (PERFORM FIELD INSPECTIONS IN ACCORDANCE WITH ACI 318)
      a. INSPECT REINFORCING FOR CORRECT MATERIALS FABRICATIONS, SIZES, LOCATIONS, SPACING, CONCRETE COVER, AND SPLICING.
      b. SAMPLE CONCRETE AND MAKE ONE SET OF FIVE CYLINDERS FOR EVERY 27 CU YDS OR LESS OF EACH CLASS OF CONCRETE PLACED ON EACH DAY AND EVERY 1,000 SF OF SURFACE AREA FOR SLABS.
      c. MEASURE SLUMP AND TEMPERATURE FOR EACH CONCRETE TRUCK.
      d. MEASURE AIR CONTENT IN AIR ENTRAINED CONCRETE FOR EACH CONCRETE TRUCK.
   B. CYLINDER COMPRESSIVE STRENGTH TESTING:
      a. TEST METHOD: ASTM C39.
      b. TEST ACCEPTANCE: IN ACCORDANCE WITH ACI 318.
      c. TEST TWO CYLINDERS AT 28 DAYS.
      d. TEST ONE CYLINDER AT 7 DAYS.
      e. RETAIN TWO CYLINDERS FOR TESTING WHEN REQUESTED BY ENGINEER.
      f. DISPOSE OF REMAINING CYLINDERS WHEN TESTING IS NOT REQUIRED.

22. CONCRETE FORM WORK SHALL BE DESIGNED BY A REGISTERED PROFESSIONAL ENGINEER LICENSED IN THE COMMONWEALTH OF VIRGINIA.

23. ALL BURN BUILDING PROPOSED CONCRETE AND MASONRY SHALL STAND A MINIMUM OF TWO (2) MONTHS TO CURE BEFORE CONDUCTING THE FIRST LIVE FIRE TRAINING EVOLUTION.

24. NO VEHICLE TRAFFIC SHALL BE PERMITTED ON THE APRON SLAB FOR A MINIMUM OF ONE (1) MONTH AFTER APRON SLAB HAS BEEN PLACED.

MASONRY:

1. MASONRY CONSTRUCTION SHALL CONFORM TO THE REQUIREMENTS OF ACI 530 (LATEST EDITION), "BUILDING CODE REQUIREMENTS FOR MASONRY STRUCTURES"

2. CONCRETE MASONRY UNITS (CMU) SHALL BE 2 CELL UNITS CONFORMING TO ASTM C-90, TYPE I.

3. MORTAR SHALL CONFORM TO ASTM C-270, TYPE S.

4. GROUT SHALL CONFORM TO ASTM C-476 WITH A MINIMUM STRENGTH OF 3000 PSI.

5. ALL CONCRETE MASONRY CONSTRUCTION SHALL BE CONSTRUCTED TO HAVE A MINIMUM DESIGN COMPRESSIVE STRENGTH (f'm) OF 1,900 PSI.

6. ALL CMU REINFORCING SHALL BE DETAILED AND CONSTRUCTED PER ACI 318.
   A. VERTICAL REINFORCING STEEL: ASTM A615/A615M, 60 KSI YIELD GRADE, DEFORMED BILLET BARS, UNCOATED FINISH.
   B. DOVETAIL ANCHORS: BENT STEEL STRAP, 1x5 ¾x12 GAUGE THICK; ASTM A153/A153M HOT DIP GALVANIZED.
   C. MASONRY MORTARING AND GROUT
   D. WEEPS: PREFORMED PLASTIC TUBES, HOLLOW.

7. ENVIRONMENTAL REQUIREMENTS
   A. COLD WEATHER REQUIREMENTS: IN ACCORDANCE WITH ACI 530.1 WHEN AMBIENT TEMPERATURES OR TEMPERATURE OF MASONRY UNITS IS LESS THAN 40 DEGREES F.
   B. HOT WEATHER REQUIREMENTS: IN ACCORDANCE WITH ACI 530.1 WHEN AMBIENT TEMPERATURE IS GREATER THAN 90 DEGREES F WITH WIND VELOCITY GREATER THAN 8 MPH.

8. INSTALLATION
   A. ESTABLISH LINES, LEVELS, AND COURSING INDICATED. PROTECT FROM DISPLACEMENT.
   B. MAINTAIN MASONRY COURSES TO UNIFORM DIMENSION. FORM BED AND HEAD JOINTS OF UNIFORM THICKNESS.
   C. COURSING OF CONCRETE MASONRY UNITS:
      a. BOND: RUNNING
      b. COURSING: ONE UNIT AND ONE MORTAR JOINT TO EQUAL 8 INCHES.
      c. MORTAR JOINTS: CONCAVE.

9. CONTRACTOR SHALL SUBMIT MIX DESIGN FOR ALL READY MIX GROUT MATERIALS. ADDITIONALLY, CONTRACTOR SHALL SUBMIT DATA SHEETS FOR ALL GROUT PRODUCTS, MORTAR PRODUCTS, AND CONCRETE MASONRY UNITS, PRECAST LINTELS, AND ANCHORS

10. CONTRACTOR SHALL SUBMIT REINFORCING SHOP DRAWINGS FOR CMU REINFORCING STEEL FOR APPROVAL BY THE STRUCTURAL ENGINEER OF RECORD.

11. FIRE BRICK MASONRY UNITS SHALL BE IN ACCORDANCE WITH ASTM C-125 WITH A MINIMUM DENSITY OF 50 POUNDS PER CUBIC FOOT.

12. WHERE MASONRY INTERSECTS VERTICAL SURFACES OF CONCRETE COLUMNS AND BOTTOM SURFACES OF CONCRETE SLABS AND BEAMS, ANCHOR MASONRY TO CONCRETE WITH GALVANIZED DOVETAIL ANCHORS AT 16" ON CENTER UNLESS OTHERWISE NOTED. MASONRY SHALL NOT BE ANCHORED TO CONCRETE WHERE OPEN JOINTS ARE SHOWN NOR WHERE THERMAL LINING SEPARATED CONCRETE FROM MASONRY. DOVETAIL ANCHORS AND ANCHOR SLOTS SHALL BE NO. 106 CORRUGATED DOVETAIL ANCHOR AND NO. 100 STANDARD DOVETAIL SLOT BY HECKMAN BUILDING PRODUCTS, INC., OR AN APPROVED EQUIVALENT.

13. SPECIAL INSPECTIONS SHALL BE REQUIRED FOR THE MASONRY MATERIALS, AND INSTALLATION, INCLUDING BUT NOT LIMITED TO STRENGTH, MORTAR AND GROUT MIX, INSTALLATION, REINFORCING, PROTECTION, AND ANCHORAGE AS IDENTIFIED IN THE SCHEDULE OF SPECIAL INSPECTIONS. INSPECTIONS SHALL BE CONDUCTED IN ACCORDANCE WITH TMS 602-08/ACI 530-08/ASCE 6-08 LEVEL A QUALITY ASSURANCE REQUIREMENTS.

STRUCTURAL AND MISCELLANEOUS STEEL:

1. ALL STRUCTURAL STEEL FRAMING SHALL BE IN ACCORDANCE WITH THE LATEST EDITION OF AISC "MANUAL OF STEEL CONSTRUCTION". ALL (W) SHAPES SHALL BE ASTM A-992. ALL STEEL ANGLES, CHANNELS, AND PLATES SHALL BE ASTM A-36. ALL STRUCTURAL STEEL TUBES SHALL BE ASTM A500 GRADE B.

2. STEEL STAIR FRAMING TO BE FABRICATED IN ACCORDANCE WITH NAAMM AMP 150 CLASS INDUSTRIAL. STAIR AND RAIL JOINTS TO BE FINISHED IN ACCORDANCE WITH NOMMA GUIDELINES.

3. CONTRACTOR TO SUBMIT SHOP DRAWINGS FOR ALL STRUCTURAL AND MISCELLANEOUS STEEL FABRICATION AND ERECTION, FOR APPROVAL BY THE STRUCTURAL ENGINEER OF RECORD.

4. ALL STRUCTURAL STEEL SHOP WORK TO BE WELDED WITH E70XXX ELECTRODES. FIELD WORK CONNECTIONS TO BE BOLTED WITH ¾" HIGH STRENGTH A325X BOLTS OR WELDED WITH E70XXX ELECTRODES. PRE-DRILLED HOLES IN STEEL MEMBERS AS REQUIRED FOR FASTENING, BLOCKING, ETC.

5. ALL FRAMING BOLTS SHALL BE SNUG TIGHT, U.N.O.

6. ALL COLUMNS SHALL BE FURNISHED WITH CAP PLATES AND BASE PLATES OF SIZE CALLED FOR AND SHALL BE SHOP WELDED . BASE PLATES SHALL BEAR ON LEVELING NUTS SET IN 1" THICKNESS OF APPROVED SHRINK RESISTANT GROUT EXCEPT WHEN SHOWN OTHERWISE, AND ANCHORED WITH FOUR (4) ¾" DIAMETER THREADED RODS WITH DOUBLE NUTS @ ½" LEVELING PLATE.

7. ALL STRUCTURAL STEEL TO HAVE ONE SHOP COAT OF RUST INHIBITIVE PAINT, U.N.O. ALL EXTERIOR STRUCTURAL STEEL, INCLUDING STAIR AND RAIL FRAMING, SHALL BE G60 GALVANIZED.

8. TOUCH-UP PRIMER FOR GALVANIZED SURFACES. SSPC PAINT 20 TYPE I INORGANIC.
   A. ANIT-CORROSIVE PAINTS: MAXIMUM VOLATILE ORGANIC COMPOUND CONTENT IN ACCORDANCE WITH GC-03.

9. SPECIAL INSPECTION SHALL BE REQUIRED FOR THE STRUCTURAL STEEL MATERIAL, QUALITY CONTROL PROGRAM, BOLTS, NUTS AND WASHERS, WELDING, AND STRUCTURAL DETAILS AS IDENTIFIED IN THE SCHEDULE OF SPECIAL INSPECTIONS.

   INSPECTIONS MUST INCLUDE, BUT ARE NOT LIMITED TO:

   A. FABRICATION INSPECTIONS: (PERFORM FABRICATION INSPECTIONS IN ACCORDANCE WITH AISC 360)
      a. INSPECT FABRICATED MEMBER TOLERANCES MEET THE REQUIREMENTS OF AISC 303.
      b. INSPECT SHOP WELDING IN ACCORDANCE WITH AWS D1.1.
      c. INSPECTION OF SHOP BOLTED CONNECTIONS IN ACCORDANCE WITH THE RCSC SPECIFICATION FOR STRUCTURAL JOINTS USING ASTM A325 OR A490 BOLTS.

   B. FIELD INSPECTIONS: (PERFORM FIELD INSPECTIONS IN ACCORDANCE WITH AISC 360)
      a. INSPECT ERECTION TOLERANCES IN ACCORDANCE WITH AISC 303.
      b. INSPECTION FIELD WELDING IN ACCORDANCE WITH AWS D1.1.
      c. INSPECT FIELD BOLTED CONNECTIONS IN ACCORDANCE WITH THE RCSC SPECIFICATION FOR STRUCTURAL JOINTS USING ASTM A325 OR A490 BOLTS.

STEEL GRATING AND TREADS:

1. STEEL GRATING SHALL BE 2" DEEP, 14 GAUGE, GALVANIZED GRIP STRUT S-DIAMOND SAFETY GRATING OR EQUIVALENT. INSTALL GRATING IN ACCORDANCE WITH THE MANUFACTURERS REQUIREMENTS TO CREATE A TWO-SPAN CONDITION BY WELDING. WELD SIDES OF ADJACENT PANES TOGETHER PER MANUFACTURES RECOMMENDATIONS.

2. STEEL STAIR TREADS SHALL BE 2" DEEP, 14 GAUGE GALVANIZED GRIP STRUT S-DIAMOND STAIR TREADS OR EQUIVALENT. INSTALL TREADS IN ACCORDANCE WITH THE MANUFACTURER'S REQUIREMENTS USING STANDARD GALVANIZED OR STAINLESS STEEL BOLTS.

3. CONTRACTOR TO SUBMIT PRODUCT DATA FOR STAIR TREADS AND LANDING GRATING FOR APPROVAL BY THE STRUCTURAL ENGINEER OF RECORD.

CONCRETE STAIR NOSING:

1. CONCRETE STAIR NOSING SHALL BE 4"x3"x40" 304 MILL FINISH STAINLESS STEEL MATERIALS BY SLIPNOT METAL SAFETY FLOORING OR APPROVED EQUAL.

2. INSTALL PER MANUFACTURERS RECOMMENDATIONS.

3. CONTRACTOR TO SUBMIT PRODUCT DATA, SHOP DRAWINGS AND PRODUCT SAMPLE

VIRGINIA DEPARTMENT OF FIRE PROGRAMS

CITY OF WINCHESTER VIRGINIA

TITLE: GENERAL NOTES

PROJECT:
CITY OF WINCHESTER
BURN BUILDING
1716 WOODSTOCK LANE
WINCHESTER, VIRGINIA 22602

PAINTER-LEWIS, P.L.C.
817 CEDAR CREEK GRADE, SUITE #120
WINCHESTER, VIRGINIA 22601
TELEPHONE: (540) 662-5792
FACSIMILE: (540) 662-5793
EMAIL: office@painterlewis.com
CONSULTING ENGINEERS

REVISIONS

NO.	DATE

COMMONWEALTH OF VIRGINIA
TIMOTHY C. PAINTER
Lic. No. 018260
08/15/16
PROFESSIONAL ENGINEER

DRAWN BY: RJD
JOB NO.: 1511018
DATE: 08-15-2016
SCALE: AS NOTED
SHEET: A0.2

GENERAL NOTES (CONTINUED):

WOOD: (FOR CHOP-OUT OPENING)

1. WOOD FRAMING IS BASED ON DESIGN VALUES NOTED IN THE NATIONAL DESIGN SPECIFICATION FOR WOOD CONSTRUCTION, 2012 EDITION.
2. RAFTERS FOR CHOP-OUT OPENING SHALL BE CONSTRUCTED WITH No. 2 SPRUCE-PINE-FIR (SPF) WITH MINIMUM Fb=875 PSI AND E=1,4000,000 PSI ALLOWABLE STRESSES.
3. ALL PLYWOOD SHALL BE MANUFACTURED AND GRADED IN ACCORDANCE WITH U.S. DEPARTMENT OF COMMERCE (DOC) PRODUCT STANDARD PSI-95 FOR PLYWOOD CONSTRUCTION FROM GROUP I SPECIES. EACH PLYWOOD SHEET SHALL BEAR THE "APA" GRADE TRADEMARK.
4. PLYWOOD ROOF SHEATHING SHALL CONFORM TO APA C-D RATED EXTERIOR $\frac{3}{4}$" MINIMUM THICKNESS PLYWOOD SHEATHING UNLESS NOTED OTHERWISE.
5. THE FACE GRAIN ON THE PLYWOOD SHALL BE LAID AT RIGHT ANGLES TO THE RAFTERS.
6. FASTENERS SHALL BE PLACED $\frac{3}{8}$" MINIMUM FROM THE EDGE OF THE PLYWOOD SHEETS.
7. ALL WOOD USED FOR CHOP OUT FRAMING SHALL NOT BE PRESERVATIVE OR FIRE RETARDANT TREATED.

ANCHORS (GENERAL):

1. ALL ANCHORS SHALL BE INSTALLED IN ACCORDANCE WITH THE RECOMMENDATIONS OF THE MANUFACTURER.
2. HOLES FOR ANCHORS TO BE INSTALLED IN MASONRY SHALL BE DRILLED WITH A ROTARY DRILL ONLY, NOT A ROTARY-HAMMER DRILL.

EXPANSION ANCHORS:

3. EXPANSION ANCHORS SHALL BE WEDGE TYPE WITH A SINGLE PIECE THREE SECTION WEDGE. THE ANCHORS SHALL MEET THE DESCRIPTION IN FEDERAL SPECIFICATIONS FF-S-325, GROUP II, TYPE 4, CLASS I FOR CONCRETE EXPANSION ANCHORS. ANCHORS SHALL BE HILTI KWIK BOLT III, MANUFACTURED BY HILTI FASTENING SYSTEMS, OR EQUIVALENT.
4. ALL EXPANSION ANCHORS SHALL BE ZINC PLATED IN ACCORDANCE WITH ASTM B633, SERVICE CONDITION SCI, TYPE III UNLESS INDICATED IN THE DRAWINGS AS STAINLESS STEEL.
5. UNLESS OTHERWISE NOTED, THE FOLLOWING MINIMUM REQUIREMENTS SHALL BE MET FOR EXPANSION ANCHORS:

EXPANSION ANCHOR DIAMETER	EMBEDMENT DEPTH	ALLOWABLE LOADS IN CONCRETE (4000 PSI)	
		TENSION (POUNDS)	SHEAR (POUNDS)
$\frac{3}{8}$"	$2\frac{1}{2}$"	1,570	1,870
$\frac{1}{2}$"	$3\frac{1}{2}$"	2,510	3,580

SLEEVE ANCHORS:

6. SLEEVE ANCHORS SHALL MEET THE FEDERAL SPECIFICATION FF-S-325, GROUP II, TYPE 3, CLASS 3 FOR EXPANSION SHIELD ANCHORS. ANCHORS SHALL BE HLC SLEEVE ANCHORS, MANUFACTURED BY HILTI FASTENING SYSTEMS, OR EQUIVALENT.
7. ALL SLEEVE ANCHORS SHALL BE ZINC PLATED IN ACCORDANCE WITH ASTM B633, SERVICE CONDITION SC I, TYPE III UNLESS INDICATED IN THE DRAWINGS AS STAINLESS STEEL.
8. UNLESS OTHERWISE NOTED, THE FOLLOWING MINIMUM REQUIREMENTS SHALL BE MET FOR SLEEVE ANCHORS:

SLEEVE ANCHOR DIAMETER	EMBEDMENT DEPTH	ALLOWABLE LOADS IN HOLLOW CMU	
		TENSION (POUNDS)	SHEAR (POUNDS)
$\frac{3}{8}$"	$1\frac{1}{2}$"	435	800

DROP-IN ANCHORS:

9. ANCHORS SHALL BE DOUBLE SHIELD DROP-IN ANCHORS MANUFACTURED BY POWERS FASTENERS OR EQUIVALENT.
10. ALL DROP-IN ANCHORS SHALL BE STAINLESS STEEL.
11. UNLESS NOTED OTHERWISE, THE FOLLOWING MINIMUM REQUIREMENTS SHALL BE MET FOR DROP-IN ANCHORS:

DROP IN ANCHOR DIAMETER	EMBEDMENT DEPTH	ALLOWABLE LOADS IN HOLLOW CMU	
		TENSION (POUNDS)	SHEAR (POUNDS)
$\frac{1}{2}$"	$1\frac{1}{2}$"	540	625

12. CONTRACTOR SHALL SUBMIT PRODUCT DATA FOR ALL POST-INSTALL CONCRETE AND MASONRY ANCHORS FOR APPROVAL BY THE STRUCTURAL ENGINEER OF RECORD.

SEALANTS & EXPANSION JOINT FILLER:

1. SUBMIT DATA INDICATING SEALANT CHEMICAL CHARACTERISTICS, PERFORMANCE CRITERIA, SUBSTRATE PREPARATION, LIMITATIONS, AND COLOR AVAILABILITY.
2. PRODUCTS:

   A. EXTERIOR EXPANSION JOINT SEALANT. W.R. MEADOWS POURATHANE NS OR APPROVED EQUAL MEETING ASTM C920-11, TYPE S, GRADE NS, CLASS 35, USE T1, T2, NT, O, M, G.
   B. EXPANSION JOINTS. W.R. MEADOWS CERAMAR FLEXIBLE FOAM EXPANSION JOINT FILLER OR APPROVED EQUAL MEETING ASTM D 5294, TYPE 2, ASTM D 7174-05.
   C. EXTERIOR METAL LAP JOINT SEALANT: BUTYL OR POLYISOBUTYLENE, NON-DRYING, NON-SKINNING, NON-CURING TO BE USED FOR CONCEALED SHEET METAL WORK AND SIDING OVERLAPS .
   D. SILICONE SEALANT MEETING ASTM C920, GRADE NS, CLASS 25, USES NT,A. HARDNESS RATING RANGE 15 TO 35.

3. INSTALL PER MANUFACTURERS RECOMMENDATIONS.

FIRE-SUPRESSION STANDPIPES

1. REFERENCES SHALL BE FROM THE FOLLOWING:
   A. FM-APPROVAL GUIDE, A GUIDE TO EQUIPMENT, MATERIALS & SERVICES APPROVED BY FACTORY MUTUAL RESEARCH FOR PROPERTY CONSERVATION.
   B. NFPA 14-STANDARD FOR THE INSTALLATION OF STANDPIPE, PRIVATE HYDRANTS AND HOSE SYSTEMS
   ALL PART #'S FROM AMERICAN FIRE HOSE AND CABINET.
2. PROVIDE SUBMITTALS TO INCLUDE SHOP DRAWINGS WITH SUPPORT INDICATION, COMPONENTS, ACCESSORIES AND SIZES. PRODUCT DATA, FIELD TEST REPORTS, AND MANUFACTURER'S INSTALLATION INSTRUCTIONS.
3. PERFORM WORK IN ACCORDANCE WITH NFPA 14.
4. WARRANTY: PROVIDE FIVE YEAR MANUFACTURER WARRANTY FOR STANDPIPE AND HOSES.
5. MATERIALS:

   A. DRY HYDRANT CONNECTION (COMING FROM PUMPER STEAMER):
      a. 6" LONG HANDLE F SWIVEL NST WITH PLUG & CHAIN x 6" PVC 90° ELBOW #DHF690
      b. 6" DRY HYDRANT LOW LEVEL PVC STRAINER #DHLL60

   B. BACK FLOW PIPE (COMING FROM PUMPER DISCHARGE):
      a. $2\frac{1}{2}$" F NST SWIVEL x $2\frac{1}{2}$" F NPT ALUMINUM FEMALE SWIVEL x FEMALE RIGID ADAPTER #ASF250F
      b. $2\frac{1}{2}$" NST ALUMINUM PLUG & CHAIN #AFP250F

   C. FILL PIPE (COMING FROM HYDRANT $2\frac{1}{2}$" SPUD):
      a. $2\frac{1}{2}$" F NST SWIVEL x $2\frac{1}{2}$" M NST HYDRANT GATE VALVE, ALUMINUM #AHGV250F-1
      b. $2\frac{1}{2}$" F NST SWIVEL x $2\frac{1}{2}$" F NPT ALUMINUM FEMALE SWIVEL x FEMALE RIGID ADAPTER # ASF250F
      c. $2\frac{1}{2}$" NST ALUMINUM PLUG & CHAIN # AFP250F

   D. FDC CONNECTION (COMING FROM PUMPER 4" STORZ DISCHARGE):
      a 4" STORZ x 4" F NPT (INCLUDES CAP & CHAIN), SILVER POWDER COATED, 90° ELBOW #AF0344

   E. STANDPIPE RISER:
      a. (2) $2\frac{1}{2}$" F NPT x $2\frac{1}{2}$" M NST ROUGH BRASS ANGLE HOSE VALVE (IMPORTED) #AV250-1
      b. (2) $2\frac{1}{2}$" F NST x $1\frac{1}{2}$" M NPT ALUMINUM FEMALE x MALE ADAPTERS #AHA2515T
      c. (2) $2\frac{1}{2}$" NST CAP & CHAIN, ROUGH BRASS #FC250F

   F. SPRINKLER SIMULATOR:
      a. 1" QUARTER TURN VALVE
      b. (12) $\frac{1}{2}$" 200 DEGREE BRASS PENDENT SPRINKLER HEAD #GL5651
      c. 1/2" SPRINKLER HEAD WRENCH #325390
      d. 12 SPRINKLER HEAD BOX #02-400-00

   G. FIRE HOSE:
      a. (2) $1\frac{3}{4}$" x 50' (RED) DOUBLE JACKET FIRE HOSE WITH ALUMINUM NST M x F (1 $\frac{1}{2}$") COUPLING #175D8-50R
      b. FOG NOZZLES

   H. ACCESSORIES:
      a. (2) THE FIRE STORE: WRENCH HOLDER SET, INCLUDES BRACKET & 2 SPANNERS #WH76201A

6. TEST ENTIRE SYSTEM IN ACCORDANCE WITH NFPA 14
7. FLUSH ENTIRE SYSTEM OF FOREIGN MATTER.

MISCELLANEOUS PLUMBING

1. SUBMIT SHOP DRAWINGS FOR PIPING AND EQUIPMENT IDENTIFICATION LIST OF WORDING, SYMBOLS, LETTER SIZE, AND COLOR CODING FOR PIPE IDENTIFICATION AND VALVE CHART AND SCHEDULE INCLUDING VALVE TAG NUMBER, LOCATION, FUNCTION, AND VALVE MANUFACTURES NAME AND MODEL NUMBER. SUBMIT MECHANICAL IDENTIFICATION MANUFACTURERS CATALOG LITERATURE FOR EACH PRODUCT.
2. PRODUCTS:

   A. PLASTIC NAMEPLATES: LAMINATED THREE-LAYER PLASTIC WITH ENGRAVED BLACK LETTERS ON LIGHT BACKGROUND COLOR.
   B. PLASTIC TAGS: LAMINATED THREE-LAYER WITH ENGRAVED BLACK LETTERS ON LIGHT BACKGROUND COLOR, MINIMUM $1\frac{1}{2}$" DIAMETER.
   C. PLASTIC PIPE MARKERS: FACTORY FABRICATED, FLEXIBLE, SEMI-RIGID PLASTIC, PERFORMED TO FIT AROUND PIPE OR PIPE COVERING. LARGER SIZES MAY HAVE MAXIMUM SHEET SIZE WITH SPRING FASTENER. COLOR AND LETTERING: CONFORM TO ASME A13.1.
   D. PLASTIC TAPE PIPE MARKERS: FLEXIBLE, VINYL FILM TAPE WITH PRESSURE SENSITIVE ADHESIVE BACKING AND PRINTED MARKINGS. COLOR AND LETTERING. CONFORM TO ASME A13.1.
   E. PLASTIC UNDERGROUND PIPE MARKERS: BRIGHT COLORED CONTINUOUSLY PRINTED PLASTIC RIBBON TAPE, MINIMUM 6" WIDE BY 4 MIL THICK, MANUFACTURED FOR DIRECT BURIAL SERVICE.
   F. SLEEVES FOR PIPES THROUGH NON-FIRE RATED FLOORS AND BEAMS; 18 GAGE THICK GALVANIZED STEEL.
   G. FORMED STEEL CHANNEL: 12 GAGE GALVANIZED STEEL WITH HOLES 1 $\frac{1}{2}$" ON CENTER.

3. INSTALLATION:

   A. PLASTIC NAME PLATES WITH ADHESIVE AND PLASTIC TAGS WITH CORROSION RESISTANT METAL CHAIN.
   B. SLEEVES SET IN FORMS WITH REINFORCING AROUND SLEEVE, ALLOW FOR MOVEMENT DUE TO EXPANSION AND CONTRACTION. EXTEND SLEEVES THROUGH FLOORS 1" ABOVE FINISHED FLOOR AND CAULK.
   WHERE PIPING OR DUCTWORK PENETRATES FLOOR, CEILING, OR WALL, CLOSE OFF SPACE BETWEEN PIPE OR DUCT AND ADJACENT WORK WITH STUFFING INSULATION AND CAULK AIRTIGHT. PROVIDE CLOSE FITTING METAL COLLAR OR CHROME ESCUTCHEON COVERS AT BOTH SIDE OF PENETRATION.

THERMAL LINING:

1. THE THERMAL LINING SYSTEM SHALL BE SYSTEM 203 ADVANCED THERMAL LINING SYSTEM BY HIGH TEMPERATURE LININGS OR APPROVED EQUAL.
2. SUBMIT PRODUCT DATA AND TESTING, MATERIAL SAMPLES AND SHOP DRAWINGS.
3. MATERIALS:
   A. THERMAL LINING PANELS - 12"X12"X2"
   B. INSULATION- 1" THICK CALCIUM SILICATE (20 P.C.F.)
   C. FASTENERS-3/8" Ø STAINLESS STEEL 304 GRADE WITH WASHER AND NUT
   D. FIRE PAVERS-$4\frac{1}{2}$"x9"x$2\frac{1}{2}$" THICK
   E. FLASHING-GRADE 304 STAINLESS STEEL
   F. FIRE CLAY
4. INSTALL PER MANUFACTURER RECOMMENDATIONS
5. PROVIDE ONE YEAR WARRANTY FOR THE THERMAL LINING SYSTEM STARTING FROM DATE OF OWNER'S ACCEPTANCE OF WORK. DEFECTIVE MATERIAL WILL BE REPLACED AT NO ADDITIONAL CHARGE TO OWNER.

TEMPERATURE MONITORING SYSTEM:

1. PROVIDE SUBMITTALS FOR PRODUCT DATA FOR CENTRAL RECORDER, THERMOCOUPLES, WIRING, AND NEMA ENCLOSURES. WARRANTIES, MAINTENANCE AND OPERATIONS MANUALS.
2. SYSTEM EQUIPMENT PERFORMANCE: SHALL BE SPECIFICALLY MANUFACTURED FOR AND CAPABLE OF REGISTERING AND DISPLAYING TEMPERATURES IN THE TRAINING STRUCTURE DURING LIVE FIRE TRAIN. OPERATING CONDITIONS AT THE CENTRAL RECORDER: 40°F TO 120°F. OPERATING CONDITIONS AT THERMOCOUPLE: 32°F TO 2,300°F. CENTRAL RECORDER SHALL BE CAPABLE OF OF SCANNING AND RECORDING TEMPERATURE READING FROM A MINIMUM OF SIX (6) THERMOCOUPLES.
3. EQUIPMENT: SYSTEM SHALL INCLUDE BUT NOT LIMITED TO CENTRAL RECORDER, THERMOCOUPLES, PROPS, EXTENSION WIRE CONNECTION THERMOCOUPLES TO CENTRAL RECORDER, ENCLOSURE WITH HEATER, AND ALARMS.
4. MANUFACTURE: SCOUT TEMPERATURE MONITORING SYSTEM AS PROVIDED BY FIRE FACILITIES, INC. OR APPROVED EQUAL.
5. PERFORMANCE AND TESTING: CALIBRATE AND TEST SYSTEM IN ACCORDANCE WITH MANUFACTURER'S REQUIREMENTS. SYSTEM SHALL BE TAILORED TO THE REQUIREMENTS OF THE OWNER'S TRAINING PROGRAM. PROVIDE ONE QUALIFIED PERSON FOR A MINIMUM OF ONE FULL DAY TO DEMONSTRATE THE SYSTEM AND TRAIN OWNER'S PERSONNEL IN USE AND MAINTENANCE OF SYSTEM.

PANELBOARDS:

1. PRODUCT DATA FOR EACH TYPE OF PANELBOARD, OVER CURRENT PROTECTIVE DEVICE, ACCESSORY, AND COMPONENT INDICATED. INCLUDE DIMENSIONS AND MANUFACTURER'S TECHNICAL DATA ON FEATURES, PERFORMANCE, ELECTRICAL, CHARACTERISTICS, RATINGS, AND FINISHES.
2. SHOP DRAWINGS TO INCLUDE DIMENSIONED PLANS, ELEVATIONS, SECTIONS AND DETAILS. SHOW TABULATIONS OF INSTALLED DEVICES, EQUIPMENT FEATURES, AND RATINGS. INCLUDE BUS CONFIGURATIONS, CURRENT AND VOLTAGE RATINGS.
3. MANUFACTURE: SQUARE D OR APPROVED EQUAL MEETING THE FOLLOWING DESCRIPTION: SURFACE MOUNTED CABINET MEETING NEMA PB 1, TYPE 1. FRONT SECURED TO BOX WITH CONCEALED TRIM CLAMPS. STANDARD HINGED FRONT COVER. STANDARD MANUFACTURERS FINISH. HARD-DRAWN COPPER BUS, 98 PERCENT CONDUCTIVITY. UL LABELED SERVICE EQUIPMENT.
4. INSTALL PANELBOARD ACCESSORIES ACCORDING TO NEMA PB1.1. MOUNTING HEIGHT 74" ABOVE FINISHED FLOOR, U.N.O. MOUNT PLUMB AND RIGID WITHOUT DISTORTION OF BOX. CREATE CIRCUIT DIRECTORY TO INDICATE INSTALLED CIRCUIT LOADS AFTER BALANCING PANELBOARD LOADS. OBTAIN APPROVAL BEFORE INSTALLING. USE COMPUTER OR TYPEWRITER TO CREATE DIRECTORY. INSTALL FILLER PLATES IN UNUSED SPACES.
5. TEST PANELBOARDS AFTER ELECTRICAL CIRCUITRY HAS BEEN ENERGIZED. PERFORM VISUAL AND MECHANICAL INSPECTION AND ELECTRICAL TEST INDICATED IN NETA ATS, SECTION 7.5 FOR SWITCHES AND SECTION 7.6 FOR MOLDED CASE CIRCUIT BREAKERS. BALANCE LOADS AFTER SUBSTANTIAL COMPLETION, BUT NOT MORE THAN 60 DAYS AFTER FINAL ACCEPTANCE. TOLERANCE BETWEEN LOAD BALANCE CHECKS SHALL NOT BE MORE THAN 20%. REBALANCE AS NECESSARY TO MEET THIS MINIMUM REQUIREMENT.

ELECTRICAL:

(SEE SHEET E3.0 FOR ADDITIONAL NOTES)

1. PROVIDE ALL NECESSARY LABOR, EQUIPMENT, ETC. FOR ALL WORK INDICATED AND REQUIRED FOR A COMPLETE INSTALLATION TO COMPLY WITH THE 2011 EDITION OF THE INTERNATIONAL ELECTRICAL CONSERVATION CODE, (2011 IECC).
2. ELECTRICAL SUB CONTRACTOR TO PROVIDE SYSTEM DESIGN AND PLAN LAYOUT FOR REVIEW AND APPROVAL.
3. THE ELECTRICAL CONTRACTOR SHALL KEEP THE PREMISES FREE FROM ACCUMULATION OF WASTE MATERIAL AND RUBBISH DAILY AND AT THE COMPLETION OF WORK, CONTRACTOR SHALL REMOVE FROM THE PREMISES ALL RUBBISH, IMPLEMENTS, AND SURPLUS MATERIALS AND LEAVE THE BUILDING "BROOM CLEAN".
4. THE ELECTRICAL CONTRACTOR SHALL PROVIDE A WRITTEN WARRANTY STATING THE THAT ALL MATERIALS AND WORKMANSHIP AREA FREE FROM DEFECTS FOR A PERIOD OF 12 MONTHS FROM DATE OF FINAL ACCEPTANCE.
5. MATERIALS:
   A. WIRE AND CABLE SHALL BE COPPER WITH THHN/THWN INSULATION AND BE SIZED AS PER 2011 NEC.
   B. ALL WIRING SHALL BE CONCEALED WHERE POSSIBLE. WHERE APPROVED BY THE DESIGNER, EXPOSED WIRING SHALL BE RUN PARALLEL AND PERPENDICULAR TO THE BUILDING CONSTRUCTION.
   C. DISCONNECT SWITCHES SHALL BE SQUARE-D GENERAL DUTY FUSIBLE WITH CLASS "R" FUSE CLIPS OR EQUAL.
   D. FUSES SHALL BE TIME-DELAY DUAL ELEMENT TYPE AND SHALL BE SIZED AS REQUIRED.
   E. LIGHTING FIXTURE AND OTHER EQUIPMENT SPECIFIED DENOTES STYLE AND QUANTITY.
   F. ALL SWITCHES AND RECEPTACLES SHALL BE SPECIFICATION GRADE AND COLOR AS CHOSEN BY OWNER.
6. THE ELECTRICAL CONTRACTOR MUST INSPECT JOB SITE PRIOR TO BIDDING JOB AND WILL INCLUDE COMPLETE RESPONSIBILITY FOR ALL LABOR AND MATERIALS AS SPECIFIED ON PLANS.
7. ELECTRICAL CONTRACTOR SHALL VERIFY THE AIC BEFORE PURCHASE OF SERVICE ENTRANCE EQUIPMENT.
8. ELECTRICAL CONTRACTOR SHALL VERIFY EQUIPMENT CAPACITY BEFORE ROUGH-IN.
9. ALL WIRING SHALL BE IN CONDUIT AND BE 12 AWG UNLESS OTHERWISE SPECIFIED. CONDUIT SHALL BE EMT OR RMC.
10. CONDUIT UNDER SLAB SHALL BE SCHEDULE 40 PVC AND SHALL BE BELOW THE FROST LINE.

TITLE: GENERAL NOTES

PROJECT: CITY OF WINCHESTER BURN BUILDING 1716 WOODSTOCK LANE WINCHESTER, VIRGINIA 22602

PAINTER-LEWIS, P.L.C.
817 CEDAR CREEK GRADE, SUITE #120
WINCHESTER, VIRGINIA 22601
TELEPHONE: (540) 662-5792
FACSIMILE: (540) 662-5793
EMAIL: office@painterlewis.com
CONSULTING ENGINEERS

REVISIONS	
NO.	DATE

COMMONWEALTH OF VIRGINIA
TIMOTHY G. PAINTER
Lic. No. 018260
08/15/16
PROFESSIONAL ENGINEER

DRAWN BY: RJD	JOB NO.: 1511018
DATE: 08-15-2016	
SCALE: AS NOTED	
SHEET: A0.3	

DIVISION 1 - GENERAL REQUIREMENTS

SEE ATTACHED GENERAL REQUIREMENTS SECTION AS PREPARED BY OWNER

DIVISION 2 - EXISTING CONDITIONS

NOT APPLICABLE

DIVISION 3 - CONCRETE

SECTION 033000

CAST-IN-PLACE CONCRETE

PART 1 GENERAL

1.1 SUMMARY

A. Section Includes:
1. Formwork.
2. Reinforcement.
3. Accessories.
4. Cast-in place concrete.
5. Finishing and curing.

1.2 SYSTEM DESCRIPTION

A. Design, engineer and construct formwork, shoring and bracing in accordance with ACI 301, ACI 318, and ACI 347 to conform to design and applicable code requirements to achieve concrete shape, line and dimension as indicated on Drawings.

B. Vapor Retarder Permeance: Maximum 1 perm when tested in accordance with ASTM E96 Procedure A.

1.3 SUBMITTALS

A. Shop Drawings:
1. Indicate pertinent dimensioning, form materials, arrangement of joints and ties, location of bracing and temporary supports, schedule of erection and stripping.
2. Indicate reinforcement sizes, spacings, locations, and quantities, bending and cutting schedules, supporting and spacing devices.
3. Indicate slabs-on-grade.

B. Product Data: Indicate admixtures and anchors.

C. Design Data: Submit mix designs.

1.4 QUALITY ASSURANCE

A. Construct and erect concrete formwork in accordance with ACI 301, ACI 318, and ACI 347.

B. Perform concrete reinforcing work in accordance with ACI 318 and CRSI Manual of Practice.

C. Perform cast-in-place concrete work in accordance with ACI 318.

D. Perform Work in accordance with Commonwealth of Virginia standards.

E. Maintain one copy of each document on site.

F. Design Work under direct supervision of Professional Engineer experienced in design of this Work and licensed in the Commonwealth of Virginia.

PART 2 PRODUCTS

2.1 FORM MATERIALS AND ACCESSORIES

A. Form Materials: At discretion of Contractor.

B. Form Ties: Snap-off metal type of fixed length cone type, leaving no metal closer than 1 inch from formed surface of concrete.

C. Dovetail Anchor Slots: Galvanized steel, non-filled, release tape sealed slots; bend tab anchors.

D. Form Release Agent: Colorless mineral oil not capable of staining concrete or impairing natural bonding characteristics of coating intended for use on concrete.

E. Formed Construction Joints for Slab-on-Grade: Galvanized steel, tongue and groove type profile, knockout holes to receive doweling.

F. Slab Edge Joint Filler: ASTM D1751, Premolded asphaltic board, 1/2 inch thick.

G. Vapor Retarder: ASTM E1745 Class C; 6 mil thick clear polyethylene film type recommended for below grade application. Furnish joint tape recommended by manufacturer.

2.2 REINFORCEMENT MATERIALS

A. Reinforcing Steel: ASTM A615/A615M, 60 ksi yield grade deformed billet bars, uncoated finish.

B. Welded Plain Wire Fabric: ASTM A185 in flat sheets unfinished. Provide epoxy coated

C. Chairs, Bolsters, Bar Supports, Spacers: Sized and shaped for support of reinforcing; plastic tipped or non-corroding for supports in slabs forming finished ceilings or where supports are exposed to weather.

D. Fabricate concrete reinforcement in accordance with CRSI Manual of Practice and ACI 318.

E. Weld reinforcement in accordance with AWS D1.4.

F. Epoxy Coated Finish for Steel Bars: ASTM A775/A775M as alternate.

G. Epoxy Coated Finish for Steel Wire: ASTM A884/A884M; Class A using ASTM A775/A775M as alternate.

H. Epoxy Coating Patching Material: Type as recommended by coating manufacturer.

2.3 CONCRETE MATERIALS

A. Cement: ASTM C150, Normal-Type I and/or II Portland type.

B. Fine and Coarse Aggregates: ASTM C33.

C. Water: Clean and not detrimental to concrete complying with ASTM C94.

D. Air Entrainment Admixture: ASTM C260.

E. Bonding Agent: Polymer resin emulsion.

F. Non-shrink Grout: Premixed compound consisting of non-metallic aggregate, cement, water reducing and plasticizing agents.

2.4 COMPOUNDS, HARDENERS AND SEALERS

A. Curing Compound: ASTM C309, Type 1, Class B, acrylic type; clear.

2.5 CONCRETE MIX

A. Mix and deliver concrete in accordance with ASTM C94.

B. Furnish concrete of the following strength for beams, slabs, and columns:
1. Compressive strength 5,000 psi (28 day).
2. Slump 3 to 5 inches.
3. Maximum water-cement ratio: .40.

C. Furnish concrete of the following strength for footings:
1. Compressive strength 3,000 psi (28 day).
2. Slump 3 to 5 inches.
3. Maximum water-cement ratio: .50.

D. Select admixture proportions for normal weight concrete in accordance with ACI 318.

E. Add air entraining agent to concrete mix for concrete work exposed to exterior.

PART 3 EXECUTION

3.1 FORMWORK ERECTION

A. Erect formwork, shoring and bracing to achieve design requirements.

B. Camber slabs and framing to achieve ACI 301 tolerances.

C. Provide bracing to ensure stability of formwork.

D. Form external corners of beams and columns with 3/4 inch chamfer.

E. Apply form release agent to formwork prior to placing form accessories and reinforcement.

F. Do not apply form release agent where concrete surfaces will receive applied coverings affected by agent.

G. Clean forms as erection proceeds, to remove foreign matter.

3.2 INSERTS, EMBEDDED COMPONENTS, AND OPENINGS

A. Provide formed openings where required for work to be embedded in and passing through concrete members.

B. Coordinate work of other sections in forming and setting openings, slots, recesses, chases, sleeves, bolts, anchors, and other inserts.

C. Install concrete accessories straight, level, and plumb.

D. Install water stops continuous without displacing reinforcement.

E. Place formed construction joint device in slab on grade as indicated on the Drawings.

F. Place joint filler at perimeter of floor slab, penetrations, and isolation joints.

3.3 REINFORCEMENT PLACEMENT

A. Place reinforcement, supported and secured against displacement.

B. Ensure reinforcing is clean, free of loose scale, dirt, or other foreign coatings.

C. Weld reinforcement in accordance with AWS D1.4.
1. Do not weld crossing reinforcement bars for assembly except as permitted by Architect/Engineer.

D. Space reinforcement bars with minimum clear spacing in accordance with ACI 318.
1. Where bars are indicated in multiple layers, place upper bars directly above lower bars.

E. Maintain concrete cover around reinforcement in accordance with ACI 318 and as indicated on the Drawings.

3.4 PLACING CONCRETE

A. Prepare previously placed concrete by cleaning with steel brush and applying bonding agent.

B. Install vapor retarder under interior slabs on grade in accordance with ASTM E1643. Lap joints minimum 6 inch and seal watertight.

C. Repair damaged vapor retarder with vapor retarder material, lap over damaged areas minimum 6 inch and seal watertight.

D. Separate slabs-on-grade from vertical surfaces with 1/2 inch thick joint filler, extended from bottom of slab to within 1/4 inch of finished slab surface.

E. Place concrete continuously between predetermined expansion, control and construction joints. Do not break or interrupt successive pours creating cold joints.

F. Place floor slabs in saw cut pattern indicated.

G. Where new concrete is doweled to existing work, drill holes in existing concrete, insert steel dowels and pack with non-shrink grout.

3.5 FORM REMOVAL

A. Do not remove forms or bracing until concrete has gained sufficient strength to carry its own weight and imposed loads.

B. Remove formwork progressively and in accordance with code requirements.

3.6 FLOOR FINISHING

A. Finish concrete floor surfaces in accordance with ACI 301 and ACI 302.1.

B. Uniformly spread, screed, and float concrete.

C. Apply light broom finish to surfaces remaining exposed to view in finished construction.

D. Maintain surface flatness, with maximum variation of 1/4 inch in 10 feet.

3.7 CURING AND PROTECTION

A. Immediately after placement, protect concrete from premature drying, excessively hot or cold temperatures, and mechanical injury.
1. Protect concrete footings from freezing for minimum of 7 days.

B. Apply sealer on floor surfaces.

C. Maintain concrete with minimal moisture loss at relatively constant temperature for period necessary for hydration of cement and hardening of concrete for not less than 7.

3.8 FORMED SURFACES

A. Provide concrete surfaces to be left exposed such as concrete columns and beams with smooth rubbed finish.

3.9 ERECTION TOLERANCES

A. Install reinforcement within tolerances required by ACI 318.

3.10 FIELD QUALITY CONTROL

A. Perform field inspection and testing in accordance with ACI 318.

B. Reinforcement Inspection:
1. Inspect for correct materials, fabrication, sizes, locations, spacing, concrete cover, and splicing.

C. Strength Test Samples:
1. Sample concrete and make one set of five cylinders for every 27 cu yds or less of each class of concrete placed each day and for every 1,000 sf of surface area for slabs.

D. Field Testing:
1. Measure slump and temperature for each concrete truck.
2. Measure air content in air entrained concrete for each concrete truck.

E. Cylinder Compressive Strength Testing:
1. Test Method: ASTM C39.
2. Test Acceptance: In accordance with ACI 318.
3. Test two cylinders at 28 days.
4. Test one cylinder at 7 days.
5. Retain two cylinders for testing when requested by Architect/Engineer.
6. Dispose remaining cylinders when testing is not required.

3.11 DEFECTIVE CONCRETE

A. Modify or replace concrete not conforming to required lines, details and elevations, as directed by Architect/Engineer.

END OF SECTION

DIVISION 4 - MASONRY

SECTION 040503

MASONRY MORTARING AND GROUTING

PART 1 GENERAL

1.1 SUMMARY

A. Section includes mortar and grout for masonry.

B. Related Sections
1. Section 042016 - Reinforced Unit Masonry: Installation of Mortar and Grout

1.2 SUBMITTALS

A. Product Data:
1. Submit data for mortar and grout products.
2. Submit mix design for ready mix grout.

1.3 QUALITY ASSURANCE

A. Perform Work in accordance with ACI 530 Building Code Requirements for Masonry Structures and ACI 530.1 Specification for Masonry Structures.

1.4 ENVIRONMENTAL REQUIREMENTS

A. Cold Weather Requirements: In accordance with ACI 530.1 when ambient temperature or temperature of masonry units is less than 40 degrees F (4 degrees C).

B. Hot Weather Requirements: In accordance with ACI 530.1 when ambient temperature is greater than 100 degrees F (38 degrees C) or ambient temperature is greater than 90 degrees F (32 degrees C) with wind velocity greater than 8 mph (13 km/h).

PART 2 PRODUCTS

2.1 MORTAR AND MASONRY GROUT

A. Manufacturers:
1. Lehigh Heidelberg Cement Group
2. Quikrete Cement & Concrete Products
3. Essroc Italcementi Group
4. Or an Approved Equal.

2.2 COMPONENTS

A. Portland Cement: ASTM C150, Type I or II, natural color or white.

B. Refractory Mortar: Medium duty, ground fireclay or alumina refractory mortar as determined by ASTM C199.

C. Mortar Aggregate: ASTM C144, standard masonry type.

D. Hydrated Lime: ASTM C206, Type S.

E. Grout Aggregate: ASTM C404.

F. Water: Clean and potable.

G. Calcium chloride is not permitted.

2.3 MIXES

A. Mortar Mixes:
1. Mortar for Structural and Non-Structural Masonry: ASTM C270, Type N using Proportion specification.
2. Pointing Mortar: ASTM C270, Type N, using Proportion specification.
3. Mortar For Firebrick Masonry: Fireclay type.

B. Mortar Mixing:
1. Thoroughly mix mortar ingredients in accordance with ASTM C270 in quantities needed for immediate use.

C. Grout Mixes:
1. Bond Beams and Lintels: 3,000 psi (21 MPa) strength at 28 days; 8-10 inches (200-250 mm) slump mixed in accordance with ASTM C476 [Fine] [Course] grout].

D. Grout Mixing:
1. Thoroughly mix grout ingredients in quantities needed for immediate use in accordance with ASTM C476.
2. Do not use anti-freeze compounds to lower freezing point of grout.

PART 3 EXECUTION

3.1 INSTALLATION

A. Install mortar and grout in accordance with ACI 530.1 Specification for Masonry Structures.

3.2 FIELD QUALITY CONTROL

A. Testing Frequency: One set of specified tests for every 2,500 sf (232 sq m) of completed wall area.

B. Testing of Mortar Mix: In accordance with ASTM C780.

C. Testing of Grout Mix: In accordance with ASTM C1019.

END OF SECTION

SECTION 042016

REINFORCED UNIT MASONRY

PART 1 GENERAL

1.1 SUMMARY

A. Section includes concrete masonry units; firebrick, reinforcement, anchorage, and accessories.

B. Related Sections:
1. Section 040503 - Masonry Mortaring and Grouting: Mortar and grout.
2. Section 055000 - Metal Fabrications: Product requirements for fabricated steel items for placement by this section.
3. Section 079000 - Joint Protection: Rod and sealant at control joints.

1.2 REFERENCES

A. American Concrete Institute:
1. ACI 530 - Building Code Requirements for Masonry Structures.
2. ACI 530.1 - Specifications for Masonry Structures.

B. ASTM International:
1. ASTM A153/A153M - Standard Specification for Zinc Coating (Hot-Dip) on Iron and Steel Hardware.
2. ASTM A307 - Standard Specification for Carbon Steel Bolts and Studs, 60 000 PSI Tensile Strength.
3. ASTM A580/A580M - Standard Specification for Stainless Steel Wire.
4. ASTM A615/A615M - Standard Specification for Deformed and Plain Billet-Steel Bars for Concrete Reinforcement.
5. ASTM A653/A653M - Standard Specification for Steel Sheet, Zinc-Coated (Galvanized) or Zinc-Iron Alloy-Coated (Galvannealed) by the Hot-Dip Process.
6. ASTM B695 - Standard Specification for Coatings of Zinc Mechanically Deposited on Iron and Steel.
7. ASTM C27 - Standard Classification of Fireclay and High-Alumina Refractory Brick.
8. ASTM C90 - Standard Specification for Loadbearing Concrete Masonry Units.
9. ASTM C140 - Standard Test Methods of Sampling and Testing Concrete Masonry Units.
10. ASTM C744 - Standard Specification for Prefaced Concrete and Calcium Silicate Masonry Units.
11. ASTM C1261 - Standard Specification for Firebox Brick for Residential Fireplaces.
12. ASTM C1283 - Standard Practice for Installing Clay Flue Lining.
13. ASTM E84 - Test Method for Surface Burning Characteristics of Building Materials.
14. ASTM E119 - Standard Test Methods for Fire Tests of Building Construction and Materials.

1.3 PERFORMANCE REQUIREMENTS

A. Concrete Masonry Assemblies Compressive Strength (f'm): 1,900 psi; determined by prism test method.
1. Concrete Masonry Units: 1950 psi minimum net area compressive strength.

1.4 SUBMITTALS

A. Section 013300 - Submittal Procedures: Submittal requirements.

B. Shop Drawings: Indicate bars sizes, spacings, locations, reinforcement quantities, bending and cutting schedules, supporting and spacing devices for reinforcement, and accessories.

C. Product Data:
1. Submit data for concrete masonry units.

1.5 QUALITY ASSURANCE

A. Perform Work in accordance with ACI 530 and ACI 530.1.

B. Maintain one copy of each document on site.

1.6 QUALIFICATIONS

A. Installer: Company specializing in performing Work of this section with minimum three years experience.

1.7 DELIVERY, STORAGE, AND HANDLING

A. Section 016000 - Product Requirements: Product storage and handling requirements.

1.8 ENVIRONMENTAL REQUIREMENTS

A. Section 016000 - Product Requirements.

B. Cold Weather Requirements: In accordance with ACI 530.1 when ambient temperature or temperature of masonry units is less than 40 degrees F.

C. Hot Weather Requirements: In accordance with ACI 530.1 when ambient temperature is greater than 100 degrees F or ambient temperature is greater than 90 degrees F with wind velocity greater than 8 mph.

1.9 COORDINATION

A. Section 013000 - Administrative Requirements: Coordination and project conditions.

B. Coordinate masonry work with installation of window shutter and door anchors.

PART 2 PRODUCTS

2.1 REINFORCED UNIT MASONRY ASSEMBLIES

A. Manufacturers:
1. Cast-Crete
2. Parker Block
3. Orco Block
4. Or an Approved Equal.

2.2 COMPONENTS

A. Firebrick: ASTM C155 Classification C-26 Minimum.

B. Brick Size and Shape: Nominal size of 7 5/8 x 3 5/8 x 2 1/7 inches.

C. Hollow Concrete Masonry Units (CMU): ASTM C90; normal weight.

D. Solid Concrete Masonry Units (CMU): ASTM C90; normal weight.

E. Concrete Masonry Unit Size and Shape: Nominal modular size of 8 x 8 x 16 inches. Furnish special units for 90 degree corners, bond beams, lintels, and bullnosed corners.

2.3 ACCESSORIES

A. Single Wythe Joint Reinforcement: Do not provide horizontal joint reinforcement in CMU walls.

B. Vertical Reinforcing Steel: ASTM A615/A615M, 60 ksi yield grade, deformed billet bars, uncoated finish.

C. Dovetail Anchors: Bent steel strap, 1 x 5 1/2 inch size x 12 gauge thick; ASTM A153/A153M hot dip galvanized.

D. Masonry Mortaring and Grouting: As specified in Section 040503.

E. Weeps: Preformed plastic tubes, hollow.

F. Cleaning Solution: Non-acidic, not harmful to masonry work or adjacent materials.

PART 3 EXECUTION

3.1 EXAMINATION

A. Section 013000 - Administrative Requirements: Coordination and project conditions.

B. Verify field conditions are acceptable and are ready to receive work.

C. Verify items provided by other sections of work are properly sized and located.

D. Verify built-in items are in proper location, and ready for roughing into masonry work.

3.2 PREPARATION

A. Direct and coordinate placement of metal anchors supplied to other Sections.

B. Furnish temporary bracing during installation of masonry work. Maintain in place until building structure provides permanent support.

3.3 INSTALLATION

A. Establish lines, levels, and coursing indicated. Protect from displacement.

B. Maintain masonry courses to uniform dimension. Form bed and head joints of uniform thickness.

C. Coursing of Concrete Masonry Units:
1. Bond: Running.
2. Coursing: One unit and one mortar joint to equal 8 inches.
3. Mortar Joints: Concave.

D. Placing And Bonding:
1. Lay solid masonry units in full bed of mortar, with full head joints.
2. Lay hollow masonry units with face shell bedding on head and bed joints.
3. Buttering corners of joints or excessive furrowing of mortar joints are not permitted.
4. Remove excess mortar as Work progresses.
5. Interlock intersections and external corners.
6. Do not shift or tap masonry units after mortar has achieved initial set. Where adjustment is required, remove mortar and replace.
7. Perform job site cutting of masonry units with proper tools to assure straight, clean, unchipped edges. Prevent broken masonry unit corners or edges.
8. Isolate masonry from vertical structural framing members with movement joint as indicated on Drawings.
9. Isolate top of masonry from horizontal structural framing members and slabs or decks as indicated on Drawings.

E. Weeps and Vents: Furnish weeps and vents in outer wythe at 32 inches oc horizontally at bottom of walls.

F. Cavity Wall: Do not permit mortar to drop or accumulated into cavity air space or to plug weeps.

G. Anchorage:
1. Support and secure reinforcing bars from displacement. Maintain position within 1/2 inch of dimensioned position.
2. Embed anchors embedded in concrete. Embed anchorages in every second block joint.

H. Lintels:
1. Install reinforced unit masonry lintels over openings.
2. Openings: Place two, No. 4 reinforcing bars 1 inch from bottom web and two, No. 4 reinforcing bars 1 1/2 inches from top of block.
3. Do not splice reinforcing bars.
4. Support and secure reinforcing bars from displacement.
5. Place and consolidate grout fill without displacing reinforcing.
6. Allow masonry lintels to attain specified strength before removing temporary supports.
7. Maintain minimum 8 inch bearing on each side of opening.

VIRGINIA DEPARTMENT OF FIRE PROGRAMS

CITY OF WINCHESTER VIRGINIA

TITLE: PROJECT SPECIFICATIONS

PROJECT:
CITY OF WINCHESTER
BURN BUILDING
1716 WOODSTOCK LANE
WINCHESTER, VIRGINIA 22602

PAINTER-LEWIS, P.L.C.
817 CEDAR CREEK GRADE, SUITE #120
WINCHESTER, VIRGINIA 22601
TELEPHONE: (540) 662-5792
FACSIMILE: (540) 662-5793
EMAIL: office@painterlewis.com
CONSULTING ENGINEERS

REVISIONS

NO.	DATE

COMMONWEALTH OF VIRGINIA
TIMOTHY G. PAINTER
Lic. No. 018260
08/15/16
PROFESSIONAL ENGINEER

DRAWN BY: RJD
JOB NO.: 1511018
DATE: 08-15-2016
SCALE: AS NOTED
SHEET: A0.4a

I. Reinforced Masonry:
1. Lay masonry units with cells vertically aligned and cavities between wythes clear of mortar and unobstructed.
2. Place reinforcing, reinforcement bars, and grout as indicated on Drawings.
3. Splice reinforcement in accordance with Section 033000.
4. Support and secure reinforcement from displacement.
5. Place and consolidate grout fill without displacing reinforcing.
6. Place grout in accordance with ACI 530.1 Specification for Masonry Structures.

J. Expansion Joints:
1. Install expansion joints as indicated on Drawings:
2. Size expansion joint in accordance with Section 079000 - Joint Protection for sealant performance.

K. Built-In Work:
1. As work progresses, install built-in work items furnished by other sections.
2. Install built-in items plumb and level.
3. Do not build in materials subject to deterioration.

L. Cutting And Fitting:
1. Cut and fit for conduit. Coordinate with other sections of work to provide correct size, shape, and location.
2. Obtain Architect/Engineer's approval prior to cutting or fitting masonry work not indicated or where appearance or strength of masonry work may be impaired.

3.4 ERECTION TOLERANCES

A. Section 014000 - Quality Requirements: Tolerances.

B. Maximum Variation From Alignment of Columns: 1/4 inch.

C. Maximum Variation From Unit to Adjacent Unit: 1/16 inch.

D. Maximum Variation from Plane of Wall: 1/4 inch in 10 ft and 1/2 inch in 20 ft or more.

E. Maximum Variation from Plumb: 1/4 inch per story non-cumulative; 1/2 inch in two stories or more.

F. Maximum Variation from Level Coursing: 1/8 inch in 3 ft and 1/4 inch in 10 ft; 1/2 inch in 30 ft.

G. Maximum Variation of Joint Thickness: 1/8 inch in 3 ft.

H. Maximum Variation from Cross Sectional Thickness of Walls: 1/4 inch.

I. Maximum Variation for Steel Reinforcement:
1. Install reinforcement within the tolerances specified in ACI 530.1 for foundation walls.
2. Plus or minus 1/2 inch when distance from centerline of steel to opposite face of masonry is 8 inches or less.
3. Plus or minus 2 inches (50 mm) from location along face of wall.

3.5 FIELD QUALITY CONTROL

A. Section 014000 - Quality Requirements, 017000 - Execution Requirements: Field inspecting, testing, adjusting, and balancing.

B. Concrete Masonry Units: Test each type in accordance with ASTM C140.

3.6 CLEANING

A. Section 017000 - Execution Requirements: Final cleaning.

B. Remove excess mortar and mortar smears as work progresses.

C. Replace defective mortar. Match adjacent work.

D. Clean soiled surfaces with cleaning solution.

E. Use non-metallic tools in cleaning operations.

3.7 PROTECTION OF FINISHED WORK

A. Section 017000 - Execution Requirements: Requirements for protecting finished Work.

B. Protect exposed external corners subject to damage.

C. Protect base of walls from mud and mortar splatter.

D. Protect masonry and other items built into masonry walls from mortar droppings and staining caused by mortar.

E. Protect tops of masonry work with waterproof coverings secured in place without damaging masonry. Provide coverings where masonry is exposed to weather when work is not in progress.

END OF SECTION

DIVISION 5 - METALS

SECTION 055000

METAL FABRICATIONS

PART 1 GENERAL

1.1 SUMMARY

A. Section Includes:
1. Shop fabricated ferrous metal items, galvanized and prime painted.
2. Steel stair frame of structural sections and landings.
3. Balusters and handrailing.
4. Miscellaneous steel items.
5. Steel plate window shutters.
6. Steel plate doors.

1.2 SYSTEM DESCRIPTION

A. Design stair assembly to support live load of 100 lb/sq ft with deflection of stringer or landing framing not to exceed 1/240 of span.

B. Design handrail, guardrail, and attachments to resist forces as required by VUSBC. Apply loads non-simultaneously to produce maximum stresses.
1. Guard Top Rail and Handrail Concentrated Load: 200 pounds applied at any point in any direction.
2. Guard Top Rail Uniform Load: 50 plf applied in any direction.
3. Intermediate Rails, Panels, and Baluster Concentrated Load: 50 pounds applied to 1 sf area.

1.3 SUBMITTALS

A. Product data for steel shapes and plates, steel grating and treads, paint products, and grout.

B. Shop Drawings: Indicate profiles, sizes, connection attachments, reinforcing, anchorage, size and type of fasteners, and accessories. Include erection drawings, elevations, and details where applicable.
1. Indicate welded connections using standard AWS A2.4 welding symbols. Indicate net weld lengths.

C. Welder certificates signed by Contractor certifying that welders comply with requirements specified under the Quality Assurance Article.

1.4 QUALITY ASSURANCE

A. Finish joints in accordance with NOMMA Guideline 1.

1.5 DELIVERY, STORAGE, AND HANDLING

A. Accept metal fabrications on site in labeled shipments. Inspect for damage.

B. Protect metal fabrications from damage by exposure to weather.

1.6 FIELD MEASUREMENTS

A. Verify field measurements are as indicated on shop drawings.

PART 2 PRODUCTS

2.1 COMPONENTS

A. Steel Sections: ASTM A572/A572M; Grade 50.

B. Steel Plate: ASTM A36/A36M

C. Hollow Structural Sections: ASTM A500, Grade B.

D. Steel Pipe: ASTM A53/A53M, Grade B.

E. Sheet Steel: ASTM A653/A653M, Grade 33 Structural Quality with galvanized coating.

F. Bolts: ASTM A325; Type X.
1. Finish: Hot dipped galvanized.

G. Nuts: ASTM A563 heavy hex type.
1. Finish: Hot dipped galvanized.

H. Washers: ASTM F436; Type 1.
1. Finish: Hot dipped galvanized.

I. Handrail Fittings: Elbows, T-shapes, wall brackets, escutcheons; cast steel.

J. Anchor Rods: ASTM F1554; Grade 55, weldable.

2.2 ACCESSORIES

A. Welding Materials: AWS D1.1.

B. Shop Primer: SSPC Paint 15, Type 1, red oxide.

C. Touch-Up Primer: Match shop primer.

2.3 FABRICATION

A. General:
1. Fit and shop assemble items in largest practical sections, for delivery to site.
2. Grind exposed joints flush and smooth with adjacent finish surface. Make exposed joints butt tight, flush, and hairline. Ease exposed edges to small uniform radius.
3. Exposed Mechanical Fastenings: Flush countersunk screws or bolts, consistent with design of component.
4. Supply components required for anchorage of fabrications. Fabricate anchors and related components of same material and finish as fabrication.
5. Accurately form components required for anchorage of stairs and landings and railings to each other and to building structure.
6. Exposed Welded Joints: NOMMA Guideline 1 Joint Finish 3.

B. Handrails:
1. Fit and shop assemble components in largest practical sizes, for delivery to site.
2. Grind exposed joints flush and smooth with adjacent finish surface.
3. Accurately form components to suit stairs and landings, to each other and to building structure.

2.4 FINISHES

A. Clean surfaces of rust, scale, grease, and foreign matter prior to finishing.

B. Galvanizing for Components: ASTM A123/A123M; minimum 2.0 oz/sq ft coating thickness; galvanize after fabrication.

C. Galvanizing for Fasteners, Connectors, and Anchors:
1. Hot-Dipped Galvanizing: ASTM A153/A153M.
2. Mechanical Galvanizing: ASTM B695; Class 50 minimum.

PART 3 EXECUTION

3.1 EXAMINATION

A. Verify field conditions are acceptable and are ready to receive Work.

3.2 PREPARATION

A. Make provisions for erection stresses. Install temporary bracing to maintain alignment, until permanent bracing and attachments are installed.

B. Supply items required to be cast into concrete or embedded in masonry with setting templates, to appropriate sections.

3.3 INSTALLATION

A. Install items plumb and level, accurately fitted, free from distortion or defects.

B. Provide for erection loads and provide temporary bracing to maintain indicated alignment until completion of erection and installation of permanent attachments.

C. Field weld components indicated on shop drawings. Perform field welding in accordance with AWS D1.1.

D. Obtain approval prior to site cutting.

E. After erection, touch up welds, abrasions, and damaged finishes with prime paint or galvanizing repair paint to match shop finishes.

3.4 FIELD QUALITY CONTROL

A. Welding: Inspect welds in accordance with AWS D1.1.

END OF SECTION

SECTION 055100

METAL STAIRS

PART 1 GENERAL

1.1 SUMMARY

A. Section includes steel stair frame of structural sections, with open risers; open grate stair treads and landings; and handrailing.

B. Related Sections:
1. Section 055000 - Metal Fabrications.
2. Section 055200 - Metal Railings: Handrails and balusters other than specified in this section.

1.2 REFERENCES

A. ASTM International:
1. ASTM A36/A36M - Standard Specification for Carbon Structural Steel.
2. ASTM A53/A53M - Standard Specification for Pipe, Steel, Black and Hot-Dipped, Zinc-Coated, Welded and Seamless.
3. ASTM A123/A123M - Standard Specification for Zinc (Hot-Dip Galvanized) Coatings on Iron and Steel Products.
4. ASTM A153/A153M - Standard Specification for Zinc Coating (Hot-Dip) on Iron and Steel Hardware.
5. ASTM A325 - Standard Specification for Structural Bolts, Steel, Heat Treated, 120/105 ksi Minimum Tensile Strength.
6. ASTM A500 - Standard Specification for Cold-Formed Welded and Seamless Carbon Steel Structural Tubing in Rounds and Shapes.
7. ASTM A563 - Standard Specification for Carbon and Alloy Steel Nuts.
8. ASTM A572/A572M - Standard Specification for High-Strength Low-Alloy Columbium-Vanadium Structural Steel.
9. ASTM B695 - Standard Specification for Coatings of Zinc Mechanically Deposited on Iron and Steel.
10. ASTM F436 - Standard Specification for Hardened Steel Washers.
11. ASTM E935 - Standard Test Methods for Performance of Permanent Metal Railing Systems and Rails for Buildings.
12. ASTM E985 - Standard Specification for Permanent Metal Railing Systems and Rails for Buildings.
13. ASTM F1554 - Standard Specification for Anchor Bolts, Steel, 36, 55, and 105-ksi Yield Strength.

B. American Welding Society:
1. AWS A2.4 - Standard Symbols for Welding, Brazing, and Nondestructive Examination.
2. AWS D1.1 - Structural Welding Code - Steel.

C. National Association of Architectural Metal Manufacturers:
1. NAAMM AMP 510 - Metal Stairs Manual.
2. NAAMM MBG 531 - Metal Bar Grating Manual.

D. SSPC: The Society for Protective Coatings:
1. SSPC - Steel Structures Painting Manual.
2. SSPC SP 1 - Solvent Cleaning.
3. SSPC SP 10 - Near-White Blast Cleaning.
4. SSPC Paint 20 - Zinc-Rich Primers (Type I - Inorganic and Type II - Organic).

1.3 DESIGN REQUIREMENTS

A. Fabricate stair assembly to support uniform live load of 100 lb/sq ft and concentrated load of 300 lb/sq ft with deflection of stringer or landing framing not to exceed 1/240 of span.

B. Fabricate stair assembly to NAAMM AMP 510, Class Industrial.

1.4 SUBMITTALS

A. Section 013300 - Submittal Procedures: Submittal requirements.

B. Shop Drawings: Indicate profiles, sizes, connection attachments, reinforcing, anchorage, size and type of fasteners, and accessories.

C. Shop Drawings: Indicate welded connections using standard AWS A2.4 welding symbols. Indicate net weld lengths.

D. Welders Certificates: Certify welders employed on the Work, verifying AWS qualification within previous 12 months.

1.5 QUALITY ASSURANCE

A. Perform Work in accordance with ASTM E985 - Permanent Metal Railing Systems and Rails for Buildings.

B. Finish joints in accordance with NOMMA Guideline 1.

C. Maintain one copy of each document on site.

1.6 PRE-INSTALLATION MEETINGS

A. Section 013000 - Administrative Requirements: Pre-installation meeting.

B. Convene minimum one week prior to commencing work of this section.

1.7 FIELD MEASUREMENTS

A. Verify field measurements prior to fabrication.

PART 2 PRODUCTS

2.1 COMPONENTS

A. Steel Sections: ASTM A572/A572M; Grade 50.

B. Steel Plate: ASTM A36/A36M.

C. Hollow Structural Sections: ASTM A500, Grade B.

D. Steel Pipe: ASTM A53/A53M, Grade B.

E. Bolts: ASTM A325; Type 1X.
1. Finish: Hot dipped galvanized.

F. Nuts: ASTM A563 heavy hex type.
1. Finish: Hot dipped galvanized.

G. Washers: ASTM F436; Type 1.
1. Finish: Hot dipped galvanized.

H. Exposed Mechanical Fastenings: Flush countersunk screws or bolts; consistent with design of stair structure.

I. Welding Materials: AWS D1.1; type required for materials being welded.

J. Touch-Up Primer for Galvanized Surfaces: SSPC Paint 20 Type I Inorganic.
1. Anti-Corrosive Paints: Maximum volatile organic compound content in accordance with GC-03.

K. Gratings: As indicated on Drawings.

L. Stair Treads: As indicated on Drawings.

2.2 FABRICATION

A. Fit and shop assemble components in largest practical sections, for delivery to site.

B. Fabricate components with joints tightly fitted and secured.

C. Continuously seal joined pieces by continuous welds.

D. Grind exposed joints flush and smooth with adjacent finish surface. Make exposed joints butt tight, flush, and hairline. Ease exposed edges to small uniform radius.

E. Exposed Mechanical Fastenings: Flush countersunk screws or bolts; unobtrusively located; consistent with design of component, except where specifically noted otherwise.

F. Supply components required for anchorage of fabrications. Fabricate anchors and related components of same material and finish as fabrication, except where specifically noted otherwise.

G. Accurately form components required for anchorage of stairs and landing and railings to each other and to building structure.

2.3 FABRICATION - OPEN GRATING STAIRS AND LANDING

A. Fabricate treads 2 inch thick members as indicated on Drawings, bolted to supports; galvanized finish.

B. Form hollow stringers with rolled steel channels; galvanized finish.

C. Form landings 2inch thick same as treads; galvanized finish.

2.4 SHOP FINISHING

A. Clean surfaces of rust, scale, grease, and foreign matter prior to finishing.

B. Galvanizing: ASTM A123/A123M; galvanize after fabrication.

C. Galvanizing for Fasteners, Connectors, and Anchors:
1. Hot-Dipped Galvanizing: ASTM A153/A153M.
2. Mechanical Galvanizing: ASTM B695; Class 50 minimum.

PART 3 EXECUTION

3.1 EXAMINATION

A. Section 013000 - Administrative Requirements: Coordination and project conditions.

B. Verify field conditions are acceptable and are ready to receive work.

C. Verify concealed blocking and reinforcement is installed and correctly located to receive wall mounted handrails.

3.2 PREPARATION

A. Clean and strip primed steel items to bare metal where site welding is required.

B. Supply items required to be cast into concrete with setting templates.

3.3 INSTALLATION

A. Install components plumb and level, accurately fitted, free from distortion or defects.

B. Install anchors required for connecting stairs to structure.

C. Allow for erection loads. Install sufficient temporary bracing to maintain framing safe, plumb, and in alignment.

D. Field weld components indicated on Drawings. Perform field welding in accordance with AWS D1.1.

E. Field bolt and weld to match shop bolting and welding. Conceal bolts and screws whenever possible.

F. Mechanically fasten joints butted tight, flush, and hairline. Grind welds smooth and flush.

G. Obtain approval of Architect/Engineer prior to site cutting or creating adjustments not scheduled.

H. After erection, prime welds, abrasions, and surfaces not galvanized, except surfaces to be in contact with concrete.

3.4 ERECTION TOLERANCES

A. Section 014000 - Quality Requirements: Tolerances.

3.5 FIELD QUALITY CONTROL

A. Welding: Inspect welds in accordance with AWS D1.1.

END OF SECTION

SECTION 055200

METAL RAILINGS

PART 1 GENERAL

1.1 SUMMARY

A. Section includes steel pipe railings, fittings; and handrails.

B. Related Sections:
1. Section 033000 - Cast-In-Place Concrete: Execution requirements for placement of anchors specified in this section in concrete.
2. Section 042016 - Reinforced Unit Masonry: Execution requirements for placement of anchors specified in this section in masonry.
3. Section 055100 - Metal Stairs: Handrails other than those specified in this section.

1.2 REFERENCES

A. ASTM International:
1. ASTM A53/A53M - Standard Specification for Pipe, Steel, Black and Hot-Dipped, Zinc-Coated, Welded and Seamless.
2. ASTM A123/A123M - Standard Specification for Zinc (Hot-Dip Galvanized) Coatings on Iron and Steel Products.
3. ASTM A500 - Standard Specification for Cold-Formed Welded and Seamless Carbon Steel Structural Tubing in Rounds and Shapes.
4. ASTM E935 - Standard Test Methods for Performance of Permanent Metal Railing Systems and Rails for Buildings.

B. National Ornamental & Miscellaneous Metals Association:
1. NOMMA Guideline 1 - Joint Finishes.

C. SSPC: The Society for Protective Coatings:
1. SSPC - Steel Structures Painting Manual.
2. SSPC Paint 20 - Zinc-Rich Primers (Type I - Inorganic and Type II - Organic).

1.3 DESIGN REQUIREMENTS

A. Design handrail, guardrail, and attachments to resist forces as required by applicable code. Apply loads non-simultaneously to produce maximum stresses.
1. Guard Top Rail and Handrail Concentrated Load: 200 pounds applied at any point in any direction.
2. Guard Top Rail Uniform Load: 50 plf applied in any direction.
3. Intermediate Rails Concentrated Load: 50 pounds applied to 1 sf area.

1.4 SUBMITTALS

A. Section 013300 - Submittal Procedures: Submittal requirements.

B. Shop Drawings: Indicate profiles, sizes, connection attachments, anchorage, size and type of fasteners, and accessories.

1.5 QUALITY ASSURANCE

A. Finish joints in accordance with NOMMA Guideline 1.

B. Maintain one copy of each document on site.

1.6 FIELD MEASUREMENTS

A. Verify field measurements prior to fabrication.

PART 2 PRODUCTS

2.1 STEEL RAILING SYSTEM COMPONENTS

A. Pipe: ASTM A53/A53M, Grade B.

B. Rails and Posts: 1 1/2 inch diameter steel pipe; welded joints.

C. Fittings: Elbows, T-shapes, wall brackets, escutcheons; steel.

D. Mounting: brackets and flanges, with steel brackets for embedding in masonry.

E. Exposed Fasteners: Flush countersunk screws or bolts; consistent with design of railing.

F. Galvanizing: ASTM A123/A123M; minimum 2.0 oz/sq ft coating thickness; galvanize after fabrication.

G. Touch-Up Primer for Galvanized Surfaces: SSPC Paint 20 zinc rich.

2.2 FABRICATION

A. Fit and shop assemble components in largest practical sizes for delivery to site.

B. Fabricate components with joints tightly fitted and secured. Furnish spigots and sleeves to accommodate site assembly and installation.

C. Exposed Mechanical Fastenings: Flush countersunk screws or bolts; unobtrusively located; consistent with design of component, except where specifically noted otherwise.

D. Supply components required for anchorage of fabrications. Fabricate anchors and related components of same material and finish as fabrication, except where specifically noted otherwise.

E. Exterior Components: Continuously seal joined pieces by continuous welds. Drill condensate drainage holes at bottom of members at locations not encouraging water intrusion.

F. Interior Components: Continuously seal joined pieces by continuous welds.

G. Grind exposed joints flush and smooth with adjacent finish surface. Make exposed joints butt tight, flush, and hairline. Ease exposed edges to small uniform radius.

H. Accurately form components to suit stairs and landings, to each other and to building structure.

I. Accommodate for expansion and contraction of members and building movement without damage to connections or members.

PART 3 EXECUTION

3.1 EXAMINATION

A. Section 013000 - Administrative Requirements: Coordination and project conditions.

B. Verify field conditions are acceptable and are ready to receive work.

C. Verify concealed blocking and reinforcement is installed and correctly located to receive wall mounted handrails.

VIRGINIA DEPARTMENT OF FIRE PROGRAMS

CITY OF WINCHESTER VIRGINIA

TITLE: PROJECT SPECIFICATIONS

PROJECT:
CITY OF WINCHESTER
BURN BUILDING
1716 WOODSTOCK LANE
WINCHESTER, VIRGINIA 22602

PAINTER-LEWIS, P.L.C.
817 CEDAR CREEK GRADE, SUITE #120
WINCHESTER, VIRGINIA 22601
TELEPHONE: (540) 662-5792
FACSIMILE: (540) 662-5793
EMAIL: office@painterlewis.com
CONSULTING ENGINEERS

REVISIONS

NO.	DATE

COMMONWEALTH OF VIRGINIA
TIMOTHY G. PAINTER
Lic. No. 018260
09/15/16
PROFESSIONAL ENGINEER

DRAWN BY: RJD
JOB NO.: 1511018
DATE: 08-15-2016
SCALE: AS NOTED
SHEET: A0.4b

SECTION 055200 CONTINUED

3.2 PREPARATION

A. Clean and strip primed steel items to bare metal where site welding is required.

B. Supply items required to be embedded in masonry with setting templates, to appropriate sections.

3.3 INSTALLATION

A. Install components plumb and level, accurately fitted, free from distortion or defects.

B. Anchor railings to structure with anchors, plates, angles.

C. Field weld anchors as indicated on Drawings. Touch-up welds with primer. Grind welds smooth.

D. Conceal bolts and screws whenever possible.

3.4 ERECTION TOLERANCES

A. Section 014000 - Quality Requirements: Tolerances.

END OF SECTION

DIVISION 6 - WOOD AND PLASTICS

SECTION 061000

ROUGH CARPENTRY

PART 1 GENERAL

1.1 SUMMARY

A. Section includes roof framing; roof sheathing; fire retardant treatment; electrical panel back boards.

1.2 SUBMITTALS

A. Submit three (3) copies of Product Submittal for Fire Retardant Treatment.

1.3 QUALITY ASSURANCE

A. Perform Work in accordance with the following:
1. Lumber Grading Agency: Certified by DOC PS 20.
2. Wood Structural Panel Grading Agency: Certified by EWA - The Engineered Wood Association
3. Lumber: DOC PS 20.
4. Wood Structural Panels: DOC PS 1 or DOC PS 2.

B. Surface Burning Characteristics:
1. Fire Retardant Treated Materials: Maximum 25/450 flame spread/smoke developed index when tested in accordance with ASTM E84.

C. Apply label from agency approved by authority having jurisdiction to identify each fire retardant treated material.

D. Maintain one copy of each document on site.

PART 2 PRODUCTS

2.1 LUMBER MATERIALS

A. Lumber Grading Rules: SPIB

2.2 SHEATHING MATERIALS

A. Plywood Roof Sheathing: Rated Sheathing, plywood; Exposure Durability 1.

B. Telephone and Electrical Panel Boards: Plywood.

2.3 SHEATHING LOCATIONS

A. Sloped Roof Sheathing: 3/4 inch thick, 48 x 96 inch sized sheets, square edges.

2.4 WOOD TREATMENT

A. Fire Retardant Treatment: Chemically treated and pressure impregnated, having flame spread of 25 or less when tested in accordance with ASTM E 84 and showing no evidence of significant progressive combustion when test is continued for an additional 20 minute period, Exterior Type.

B. Moisture Content after Treatment:
1. Lumber: Maximum 19 percent.
2. Structural Panels: Maximum 15 percent.

C. All wood and sheathing used in Class B Fuel Buildings shall be fire retardant treated. All wood and sheathing used in Class A Fuel Buildings shall not be fire retardant treated.

PART 3 EXECUTION

3.1 FRAMING

A. Set structural members level and plumb, in correct position.

B. Fasten framing in accordance with applicable code.

3.2 SHEATHING

A. Fasten sheathing in accordance with applicable code.

B. Install sheathing to two span continuous. Use sheathing clips between sheets between roof framing members.

C. Install telephone and electrical panel back boards with plywood sheathing material where required. Size back board by 12 inches beyond size of electrical panel.

END OF SECTION

DIVISION 7 - THERMAL AND MOISTURE PROTECTION

SECTION 071400

FLUID-APPLIED WATERPROOFING

PART 1 GENERAL

1.1 SUMMARY

A. Section includes fluid applied polymer modified Portland cement slurry membrane waterproofing; protective covering.

B. Related Sections:
None.

1.2 REFERENCES

1.3 SYSTEM DESCRIPTION

A. Waterproofing System: Portland cement application fluid applied material to prevent moisture migration to interior through concrete slabs.

1.4 PERFORMANCE REQUIREMENTS

1.5 SUBMITTALS

A. Section 013300 - Submittal Procedures: Submittal procedures.

B. Product Data: Submit data for coating with temperature range for application of waterproofing membrane.

C. Manufacturer's Installation Instructions: Submit special procedures and perimeter conditions requiring special attention.

D. Warranty: Submit manufacturer warranty and ensure forms have been completed in Owner's name and registered with manufacturer.

1.6 QUALITY ASSURANCE

A. Maintain one copy of each document on site.

1.7 QUALIFICATIONS

A. Waterproofing Material Manufacturer: Company specializing in waterproofing membrane with minimum three years documented experience.

B. Applicator: Company specializing in performing the work of this section with minimum three years experience. Applicator will have received training for product by manufacturer.

1.8 WARRANTY

A. Section 017000 - Execution Requirements: Product warranties and product bonds.

B. Furnish five year manufacturer warranty for waterproofing failing to resist penetration of water.

C. For warranty repair work, remove and replace materials concealing waterproofing.

PART 2 PRODUCTS

2.1 FLUID APPLIED WATERPROOFING

A. Manufacturers:
1. Barrier
2. Vandex
3. VSS
4. Or an Approved Equal.

2.2 COMPONENTS

A. Waterproofing Membrane: polymer-modified Portland cement slurry.

B. Cured Membrane Characteristics at 28 days:

Properties	Test	Results
Tensile Strength	ASTM C307	870 psi
Bond Strength	ACI 503R-30 Modified	180 psi
Moisture Vapor permeability	ASTM E96	18 perms
Compressive Strength	ASTM D695	3000 psi
Flexibility	ASTM D522 Modified	25%

PART 3 EXECUTION

3.1 PREPARATION

A. Substrate must be clean, sound and free of surface contaminants. Remove dust, laitance, grease, oils, curing compounds, form release agents and all foreign particles by mechanical means.

B. An open-textured, sandpaper-like substrate is ideal. Substrates shall be in accordance with ICRI Guideline No. 03732 for coatings and fall within CSP4.

C. All surfaces must be saturated surface dry (SSD), with no standing water at time of application. Protect adjacent surfaces not designated to receive waterproofing.

D. Do not apply waterproofing to surfaces unacceptable to manufacturer or applicator.

3.2 INSTALLATION

A. Mix components per the manufacturer's recommendations.

B. Apply with stiff bristle brush. Work material into the prepared substrates, filling all pores and voids. For brush grade: Apply first coat, with horizontal brush strokes and leave to harden (4 to 8 hours). Apply second coat with vertical brush strokes.

C. When applying the coating, never stop the application until the entire surface has been coated. Always stop application at an edge, corner, or joint. Never let a previously coated film dry; always coat into a wet film. Always apply the coating at a 45° angle to an edge, corner, or joint.

D. Adhere to all limitations and cautions for the polymer-modified cement coating in the manufacturer's printed literature.

3.3 PROTECTION OF INSTALLED CONSTRUCTION

A. Section 017000 - Execution Requirements: Protecting installed construction.

B. Do not permit traffic over unprotected or uncovered membrane.

END OF SECTION

SECTION 078000

FIRE AND SMOKE PROTECTION

PART 1 GENERAL

1.1 RELATED DOCUMENTS

A. Drawing and general provisions of the Contract, including General and Supplementary Conditions and Division 1 Specification Section, apply to this Section.

1.2 SUMMARY

A. This section includes requirements for the thermal lining system.

1.3 PERFORMANCE REQUIREMENTS FOR THERMAL LINING

A. Thermal lining shall provide thermal protection for the structural components from temperatures attained during fire training.
1. Thermal lining shall withstand spike temperatures at the exposed face of thermal lining of up to 1,500°F.
2. Temperature behind thermal lining during live fire training, at the face of the protected structure, shall not exceed 350°F when the room temperature at the exposed face of the thermal lining is 1,500°F.
3. During a live fire training day, multiple live fire training evolutions may occur. After each evolution, the fire may be left smoldering, but not completely extinguished. At the beginning of the next evolution, the fire is reignited. This cycle typically repeats all day during a training day. As a result, significant residual heat builds up in the building by the last training evolution. The thermal lining shall withstand, without damage, residual heat buildup created by a minimum of 20 consecutive live fire training evolutions within a 24 hour day.

B. Thermal lining shall withstand, without damage, repetitive thermal shock created by rapid cooling of heated surfaces with cool water from water mains. Thermal lining shall allow for expansion and contraction caused by rapid heating and cooling.

C. Thermal lining shall withstand, without damage, impact loads and other associated stresses induced by pressurized water sprayed from hoses (300 gallons per minute, 100 pounds per square inch of pressure) and thermally pressurized steam.
1. Thermal lining shall prevent water and steam penetration to the protected structure.
2. Thermal lining shall be designed to expel any absorbed moisture, whether absorbed during training evolutions, changes in humidity, or temperature-related condensation.
3. Thermal lining shall not be damaged by absorbed moisture or by rapid heating of absorbed moisture during live fire training.
4. For multi-component thermal lining systems consisting of an insulation layer protected by another layer of durable materials, the insulation layer shall not sag or move behind the protective layer.

D. Thermal lining shall withstand, without damage, routine physical abuse during typical live fire training evolutions, including but limited to:
1. Impact of fire fighters' protective clothing, self-contained breathing apparatuses, or hand tools
2. Impact of wood pallets or other Class A fuel materials tossed onto the fire and impacting the thermal lining.

E. Thermal lining shall be functional year-round, withstanding the effects of seasonal weather considerations, including seasonal temperate changes, freeze/thaw cycles, humidity, and precipitation.

F. Thermal lining shall withstand, without damage, the effects of oxygen deficient atmosphere.

G. Thermal lining shall allow for the use of surface and subsurface mounted thermocouples that penetrate the lining.

H. Thermal lining shall be free from asbestos or other harmful ingredients, and shall not produce toxic byproducts during live fire training.

I. Thermal lining properties shall not degrade under repeated use.

1.4 QUALIFICATIONS PROCEDURE

A. For any prospective thermal lining manufacturer/supplier/product that is not listed under Section 2, submit a written request for qualification to the Architect/Engineer. For all requests for qualification, include the information defined in the following sections and deliver to the Engineer 14 calendar days before the stated date of bid opening as identified in the solicitation documents. Lack of adequate information is sufficient cause for rejection. References to catalogs or other descriptive documents not included with the application for qualification to the Architect/Engineer are not acceptable.

B. Company and Product Capabilities: Provide the following information:
1. Corporate qualifications and capabilities that fully describe the ability to prove the required thermal lining systems and support to the Owner.
2. A history of corporate experience with the thermal lining in live fire training props (burn buildings).
3. A list of five (5) completed projects, at least two (2) of which shall be more than three (3) years old, illustrating thermal lining performance equal or greater to the performance criteria listed in this specification. Include the award date, the completion date, the contract value, and the name and telephone number of the person employed by the Owner who has personal knowledge of the thermal lining supplier's contractual and technical performance.
4. If the product does not meet the requirements for number and age of completed projects, then submit to the Architect/Engineer test data that clearly shows that the product can meet all of the performance criteria.
5. Material and installation data.

1.5 SUBMITTALS

A. General: Submit each item in this article according to the General Conditions of the Contract and Division 1 Specification Sections.

B. Evidence of installer qualifications, including certification by thermal lining manufacturer.

C. Certificate of Conformance: Manufacturer's certification that materials and equipment are physically and chemically compatible with each other, that materials are in compliance with performance requirements of this specification, and that each material and/or equipment is suitable for the intended purpose. Material and equipment not listed in the certificate will not be permitted in the work area. Submit Material Safety Data Sheets (MSDS) for the thermal lining.

D. Materials Certification: Letter from the manufacturer certifying that materials shipped meet manufacturer's specification data.

E. Samples of materials to be used.

F. Shop drawings detailing fabrication and erection of thermal lining. Include plans, elevations, sections, and details of thermal lining and connections to substrates. Show anchorage and accessory items.

SECTION 078000 CONTINUED

G. Operations and Maintenance manual describing all required maintenance and operational requirements. If required maintenance requires training, provide one on-site training session, for Owner's representatives at a date and time agreeable to Owner.

1.6 QUALITY ASSURANCE

A. All thermal linings shall be provided by one manufacturer.

B. Installer Qualifications: Thermal lining shall be installed by manufacturer or by a contractor approved by the manufacturer and under the supervision of the manufacturer.

C. Warranties:
1. The manufacturer shall furnish a one year warranty for the thermal lining system, starting from the date of Owner's acceptance of the Work, to cover replacement of all defective materials and materials that failed to meet the performance criteria.
2. The installer shall furnish a one year warranty for the thermal lining system, starting from the date of Owner's acceptance of the Work, to cover replacement of all materials found to be defective due to workmanship.
3. Warranties can exclude repairs, replacement, and corrective work to the substrate, structure, and/or property. Warranties can exclude mechanical damage to lining system due to abuse or neglect (including training that does not conform to NFPA 1403), structural failure, or forces of nature greater than normal weather conditions.

1.7 DELIVERY, STORAGE, AND HANDLING

A. Deliver thermal lining materials in manufacturer's original unopened containers or wrapped with labels intact and legible.

B. Store and protect materials from damage and weather in accordance with the manufacturer's instructions. Keep materials clean and dry at all times.

C. Handle materials in accordance with manufacturer's recommendations.

PART 2 - PRODUCTS

2.1 THERMAL LINING MANUFACTURERS

A. Manufacturers:
1. High Temperature Linings
2. Or an Approved Equal.

PART 3 - EXECUTION

3.1 PREPARATION

A. Clean surfaces to receive thermal lining of oils, dust, and other deleterious matter. Install thermal lining over dry surfaces.

3.2 INSTALLATION

A. Install thermal lining and all accessories in accordance with the manufacturer's requirements.

3.3 CLEAN UP

A. Remove all debris, scraps, containers, and any other trash resulting from the installation of the thermal lining.

END OF SECTION

SECTION 079000

JOINT PROTECTION

PART 1 GENERAL

1.1 SUMMARY

A. Section includes sealants and joint backing.

1.2 SUBMITTALS

A. Product Data: Submit data indicating sealant chemical characteristics, performance criteria, substrate preparation, limitations, and color availability.

1.3 ENVIRONMENTAL REQUIREMENTS

A. Maintain temperature and humidity recommended by sealant manufacturer during and after installation.

PART 2 PRODUCTS

2.1 JOINT SEALERS

A. Manufacturers:
1. Everlastic
2. Sika
3. W.R. Meadows
4. Or an Approved Equal.

B. Product Description:
1. Exterior Foam Expansion Joint Sealer: Precompressed foam sealer; urethane with water-repellent.
a. Size: As required to provide weathertight seal when installed.
b. Applications: Use for exterior wall expansion joints.
2. Exterior Metal Lap Joint Sealant: Butyl or polyisobutylene, non-drying, non-skinning, non-curing.
a. Applications: Use for concealed sealant bead in sheet metal work and concealed sealant bead in siding overlaps.
3. Sealant - Silicone Sealant: ASTM C920, Grade NS, Class 25, Uses NT, A; single component, solvent curing, non-sagging, non-staining, non-bleeding.
a. Movement Capability: Plus 40 percent, minus 25 percent.]
b. Service Temperature Range: -20 to 750 degrees F.
c. Shore A Hardness Range: 15 to 35.

2.2 ACCESSORIES

A. Primer: Non-staining type, recommended by sealant manufacturer to suit application.

B. Joint Cleaner: Non-corrosive and non-staining type, recommended by sealant manufacturer; compatible with joint forming materials.

SECTION 079000 CONTINUED

C. Joint Backing: Round foam rod compatible with sealant; ASTM D1667, closed cell PVC; oversized 30 to 50 percent larger than joint width.

D. Bond Breaker: Pressure sensitive tape recommended by sealant manufacturer to suit application.

PART 3 EXECUTION

3.1 EXAMINATION

A. Verify substrate surfaces and joint openings are ready to receive work.

B. Verify joint backing and release tapes are compatible with sealant.

3.2 PREPARATION

A. Remove loose materials and foreign matter impairing adhesion of sealant.

B. Clean and prime joints.

C. Perform preparation in accordance with ASTM C1193.

3.3 INSTALLATION

A. Perform installation in accordance with ASTM C1193.

B. Measure joint dimensions and size joint backers to achieve width-to-depth ratio, neck dimension, and surface bond area as recommended by manufacturer.

C. Install bond breaker where joint backing is not used.

D. Install sealant free of air pockets, foreign embedded matter, ridges, and sags.

E. Apply sealant within recommended application temperature ranges. Consult manufacturer when sealant cannot be applied within these temperature ranges.

F. Tool joints concave.

END OF SECTION

DIVISION 8 - OPENINGS

NOT APPLICABLE

DIVISION 9 - FINISHES

NOT APPLICABLE

DIVISION 10 - SPECIALTIES

NOT APPLICABLE

DIVISION 11 - EQUIPMENT

NOT APPLICABLE

DIVISION 12 - FURNISHINGS

NOT APPLICABLE

DIVISION 13 - SPECIAL CONSTRUCTION

NOT APPLICABLE

DIVISION 14 - CONVEYING EQUIPMENT

NOT APPLICABLE

DIVISIONS 15 - 20

RESERVED FOR FUTURE EXPANSION

DIVISION 21 - FIRE SUPPRESSION

SECTION 211200

FIRE-SUPPRESSION STANDPIPES

PART 1 GENERAL

1.1 SUMMARY

A. Section includes entire standpipe system from fire department connection to fire hose connection.

1.2 REFERENCES

A. FM Global:
1. FM - Approval Guide, A Guide to Equipment, Materials & Services Approved By Factory Mutual Research For Property Conservation.

B. National Fire Protection Association:
1. NFPA 14 - Standard for the Installation of Standpipe, Private Hydrants and Hose Systems.

1.3 SUBMITTALS

A. Section 013300 - Submittal Procedures: Submittal procedures.

B. Shop Drawings: Indicate supports, components, accessories, and sizes.

C. Product Data: Submit manufacturer's catalog sheet for equipment indicating rough-in size, finish, and accessories.

D. Field Test Reports: Indicate compliance with specified performance.

E. Manufacturer's Installation Instructions: Submit with product data.

F. Manufacturer's Certificate: Certify products meet or exceed specified requirements.

1.4 CLOSEOUT SUBMITTALS

A. Section 017000 - Execution Requirements: Closeout procedures.

B. Operation and Maintenance Data: Submit servicing requirements and test schedule.

VIRGINIA DEPARTMENT OF FIRE PROGRAMS

CITY OF WINCHESTER VIRGINIA

TITLE: PROJECT SPECIFICATIONS

PROJECT: CITY OF WINCHESTER
BURN BUILDING
1716 WOODSTOCK LANE
WINCHESTER, VIRGINIA 22602

PAINTER-LEWIS, P.L.C.
817 CEDAR CREEK GRADE, SUITE #120
WINCHESTER, VIRGINIA 22601
TELEPHONE: (540) 662-5792
FACSIMILE: (540) 662-5793
EMAIL: office@painterlewis.com
CONSULTING ENGINEERS

REVISIONS

NO.	DATE

COMMONWEALTH OF VIRGINIA
TIMOTHY G. PAINTER
Lic. No. 018260
08/15/16
PROFESSIONAL ENGINEER

DRAWN BY: RJD
JOB NO.: 1511018
DATE: 08-15-2016
SCALE: AS NOTED
SHEET: A0.4c

SECTION 211200 CONTINUED

1.5 QUALITY ASSURANCE

A. Perform Work in accordance with NFPA 14.

B. Maintain one copy of each document on site.

1.6 QUALIFICATIONS

A. Manufacturer: Company specializing in manufacturing products specified in this section with minimum three years documented experience.

B. Installer: Company specializing in performing Work of this section with minimum three years documented experience approved by manufacturer.

1.7 PRE-INSTALLATION MEETINGS

A. Section 013000 - Administrative Requirements: Pre-installation meeting.

B. Convene minimum one week prior to commencing work of this section.

1.8 DELIVERY, STORAGE, AND HANDLING

A. Section 016000 - Product Requirements: Requirements for transporting, handling, storing, and protecting products.

B. Deliver and store products in shipping packaging until installation.

1.9 WARRANTY

A. Section 017000 - Execution Requirements: Product warranties and product bonds.

B. Furnish five year manufacturer warranty for standpipes and hoses.

1.10 EXTRA MATERIALS

A. Section 017000 - Execution Requirements: Spare parts and maintenance products.

B. Furnish two hose nozzles and hoses.

PART 2 PRODUCTS

2.1 FIRE HOSE CABINETS

A. Manufacturers:
1. Guardian Fire Equipment
2. Potter Roemer Fire Pro
3. Larsen's
4. Or an Approved Equal.

B. Hose Cabinets:
1. Style: Surface mounted.
2. Tub: 16 gage thick steel, prepared for pipe and accessory rough in.
3. Door: 12 gage thick steel, glazed, with 1/4 inch thick wired glass full panel, hinged, positive latch device.
4. Finish: Enameled, color as selected.

C. Hose Rack: Steel; with polished chrome finish; swivel type with pins and water stop.

D. Hose: 1 inch diameter, 75 feet long, of linen, polyurethane lined synthetic or rubber lined synthetic hose; mildew and rot-resistant.

E. Nozzle: Chrome plated brass; combination fog, straight stream, and adjustable shut-off.

2.2 VALVES

A. Manufacturers:
1. North American Fire Hose Company
2. or an approved equal

B. Hose Station Valve: Angle type, brass finish, 1-1/2 inch nominal size with automatic ball drip.

C. Hose Connection Valve: Angle type; brass finish; 2-1/2 inch size, thread to match fire department hardware, 300 psi working pressure, with threaded cap and chain of brass finish.

D. Hose Connection Valve Cabinets:
1. Style: Surface mounted.
2. Tub: 1 gage thick steel, prepared for pipe and accessory rough in.
3. Door: 12 gage thick steel, glazed, with 1/4 inch thick wired glass full panel, hinged, positive latch device.
4. Finish: Enameled, color as selected.

2.3 FIRE DEPARTMENT CONNECTION

A. Type: Flush mounted wall type with brass finish.

B. Outlets: Two-way with fire department thread size. Threaded dust cap and chain of matching material and finish.

C. Drain: 3/4 inch automatic drip, outside.

D. Label: "Standpipe - Fire Department Connection".

PART 3 EXECUTION

3.1 EXAMINATION

A. Section 013000 - Administrative Requirements: Coordination and project conditions.

B. Verify blocking in place for cabinet installation.

3.2 INSTALLATION

A. Install in accordance with NFPA 14.

B. Install cabinets plumb and level. Secure to adjacent surfaces. Establish top of cabinet (inside horizontal) surface 66 inches above finished floor.

C. Install hose station valve in cabinet at 60 inches above floor. Install hose-connection valve under hose station valve and not closer than 4 inches from side or bottom of cabinet.

D. Connect standpipe system to water source ahead of domestic water connection.

3.3 FIELD QUALITY CONTROL

A. Section 014000 - Quality Requirements, 017000 - Execution Requirements: Field inspecting, testing, adjusting, and balancing.

B. Test entire system in accordance with NFPA 14.

C. Require test be witnessed by Fire Marshall.

SECTION 211200 CONTINUED

3.4 CLEANING

A. Section 017000 - Execution Requirements: Final cleaning.

B. Flush entire system of foreign matter.

END OF SECTION

DIVISION 22 - PLUMBING

SECTION 220500

COMMON WORK RESULTS FOR PLUMBING

PART 1 GENERAL

1.1 SUMMARY

A. Section Includes:
1. Identification for Plumbing Piping and Equipment.
2. Sleeves.
3. Mechanical sleeve seals.
4. Formed steel channel.

1.2 SUBMITTALS

A. Shop Drawings: Submit for piping and equipment identification list of wording, symbols, letter size, and color coding for pipe identification and valve chart and schedule, including valve tag number, location, function, and valve manufacturer's name and model number.

B. Product Data for Pipe and Equipment Identification: Submit for mechanical identification manufacturers catalog literature for each product required.

1.3 QUALITY ASSURANCE

A. Perform Work in accordance with Commonwealth of Virginia standard.

B. Maintain one copy of each document on site.

PART 2 PRODUCTS

2.1 IDENTIFICATION FOR PLUMBING PIPING AND EQUIPMENT

A. Manufacturers:
1. SETON
2. Or and Approved Equal.

B. Plastic Nameplates: Laminated three-layer plastic with engraved black letters on light background color.

C. Plastic Tags: Laminated three-layer plastic with engraved black letters on light background color, minimum 1-1/2 inches diameter.

D. Plastic Pipe Markers: Factory fabricated, flexible, semi-rigid plastic, preformed to fit around pipe or pipe covering. Larger sizes may have maximum sheet size with spring fastener. Color and Lettering: Conform to ASME A13.1.

E. Plastic Tape Pipe Markers: Flexible, vinyl film tape with pressure sensitive adhesive backing and printed markings. Color and Lettering: Conform to ASME A13.1.

F. Plastic Underground Pipe Markers: Bright colored continuously printed plastic ribbon tape, minimum 6 inches wide by 4 mil thick, manufactured for direct burial service.

2.2 SLEEVES

A. Sleeves for Pipes Through Non-fire Rated Floors: 18 gage thick galvanized steel.

B. Sleeves for Pipes Through Non-fire Rated Beams, Walls, Footings, and Potentially Wet Floors: Steel pipe or 18 gage thick galvanized steel.

C. Sealant: Refer to Section 079000 - Joint Protection

2.3 MECHANICAL SLEEVE SEALS

A. Manufacturers:
1. E.J. Prescott
2. Flexicraft
3. Metraflex
4. Or an Approved Equal.

B. Product Description: Modular mechanical type, consisting of interlocking synthetic rubber links shaped to continuously fill annular space between object and sleeve, connected with bolts and pressure plates causing rubber sealing elements to expand when tightened, providing watertight seal and electrical insulation.

2.4 FORMED STEEL CHANNEL

A. Manufacturers:
1. Unistrut
2. Or an Approved Equal.

B. Product Description: Galvanized 12 gage thick steel. With holes 1-1/2 inches on center.

PART 3 EXECUTION

3.1 EXAMINATION

A. Verify openings are ready to receive sleeves.

3.2 INSTALLATION - PIPING AND EQUIPMENT IDENTIFICATION

A. Install plastic nameplates with adhesive.

B. Install plastic tags with corrosion resistant metal chain.

3.3 INSTALLATION - SLEEVES

A. Exterior watertight entries: Seal with mechanical sleeve seals.

B. Set sleeves in position in forms. Provide reinforcing around sleeves.

C. Size sleeves large enough to allow for movement due to expansion and contraction. Provide for continuous insulation wrapping.

SECTION 220500 CONTINUED

D. Extend sleeves through floors 1 inch above finished floor level. Caulk sleeves.

E. Where piping or ductwork penetrates floor, ceiling, or wall, close off space between pipe or duct and adjacent work with stuffing insulation and caulk airtight. Provide close fitting metal collar or escutcheon covers at both sides of penetration.

F. Install chrome plated steel escutcheons at finished surfaces.

END OF SECTION

DIVISION 23 - HEATING, VENTILATING, AND AIR-CONDITIONING (HVAC)

NOT APPLICABLE

DIVISION 24

RESERVED FOR FUTURE EXPANSION

DIVISION 25 - INTEGRATED AUTOMATION

NOT APPLICABLE

DIVISION 26 - ELECTRICAL

SECTION 260500

COMMON WORK RESULTS FOR ELECTRICAL

PART 1 GENERAL

1.1 RELATED DOCUMENTS

A. The drawings and general provisions of the Contract Documents apply to this Section.

1.2 QUALITY ASSURANCE

A. Electrical Components, Devices, and Accessories: Listed and labeled as defined in NFPA 70, Article 100, by a testing agency acceptable to authorities having jurisdiction, and marked for intended use.

B. Comply with NFPA 70.

1.3 COORDINATION

A. Coordinate chases, slots, inserts, sleeves, and openings with general construction work and arrange in building structure during progress of construction to facilitate the electrical installations that follow:
1. Set inserts and sleeves in poured-in-place concrete, masonry work, and other structural components as they are constructed.

B. Sequence, coordinate, and integrate installing electrical materials and equipment for efficient flow of the Work. Coordinate installing large equipment requiring positioning before closing in the building.

C. Where electrical identification devices are applied to field-finished surfaces, coordinate installation of identification devices with completion of finished surface.

D. Where electrical identification markings and devices will be concealed by acoustical ceilings and similar finishes, coordinate installation of these items before ceiling installation.

PART 2 PRODUCTS

2.1 CONCRETE BASES

A. Concrete Forms and Reinforcement Materials: As specified in Division 3 Section Cast-in-Place Concrete.

B. Concrete: 5000-psi (20.7-MPa), 28-day compressive strength as specified in Division 3 - Concrete: Section 033000 - Cast-in-Place Concrete.

2.2 TOUCHUP PAINT

A. For Equipment: Equipment manufacturer's paint selected to match installed equipment finish.

B. Galvanized Surfaces: Zinc-rich paint recommended by item manufacturer.

2.3 SUPPORTING DEVICES

A. Material: Cold-formed steel, with corrosion resistant coating acceptable to authorities having jurisdiction.

B. Metal Items for Use Outdoors or in Damp Locations: Hot-dip galvanized steel.

C. Slotted-Steel Channel Supports: Flange edges turned toward web, and 9/16-inch diameter slotted holes at a maximum of 2 inches o.c., in webs.

D. Slotted Steel Channel Supports: Comply with Division 5 Section Metal Fabrications for slotted channel framing.
1. Channel Thickness: Selected to suit structural loading.
2. Fittings and Accessories: Products of the same manufacturer as channel supports.

E. Nonmetallic Channel and Angle Systems: structural-grade, factory-formed, glass-fiber-resin channels and angles with 9/16-inch diameter holes at a maximum of 8 inches o.c., in at least one surface.
1. Fittings and Accessories: Products of the same manufacturer as channels and angles.
2. Fittings and Accessory Materials: Same as channels and angles, except metal items may be stainless steel.

F. Raceway and Cable Supports: Manufactured clevis hangers, riser clamps, straps, threaded C-clamps with retainers, ceiling trapeze hangers, wall brackets, and spring-steel clamps or click-type hangers.

G. Pipe Sleeves: ASTM A 53, Type E, Grade A, Schedule 40, galvanized steel, plain ends.

H. Cable Supports for Vertical Conduit: Factory-fabricated assembly consisting of threaded body and insulating wedging plug for nonarmored electrical cables in riser conduits. Plugs have number and size of conductor gripping holes as required to suit individual risers. Body constructed of malleable-iron casting with hot-dip galvanized finish.

I. Expansion Anchors: Carbon-steel wedge or sleeve type. Plastic conical anchors are not allowed.

J. Toggle Bolts: All-steel springhead type.

K. Power-Driven Threaded Studs: Heat-treated steel.

SECTION 260500 CONTINUED

PART 3 EXECUTION

3.1 ELECTRICAL EQUIPMENT INSTALLATION

A. Headroom Maintenance: If mounting heights or other location criteria are not indicated, arrange and install components and equipment to provide the maximum possible headroom.

B. Materials and Components: Install level, plumb, and parallel and perpendicular to other building systems and components, unless otherwise indicated.

C. Equipment: Install to facilitate service, maintenance, and repair or replacement of components. Connect for ease of disconnecting, with minimum interference with other installations.

D. Right of Way: Give to raceways and piping systems installed at a required slope.

3.2 CONCRETE BASES

A. Construct concrete bases of dimensions indicated, but not less than 4 inches (100 mm) larger, in both directions, than supported unit and 4 inch. Follow supported equipment manufacturer's anchorage recommendations and setting templates for anchor-bolt and tie locations, unless otherwise noted.

3.3 CUTTING AND PATCHING

A. Cut, channel, chase, and drill floors, walls, partitions, ceilings, and other surfaces required to permit electrical installations. Perform cutting by skilled mechanics of trades involved.

B. Repair and refinish disturbed finish materials and other surfaces to match adjacent undisturbed surfaces. Install new fireproofing where existing firestopping has been disturbed. Repair and refinish materials and other surfaces by skilled mechanics involved.

3.4 FIELD QUALITY CONTROL

A. Inspect installed components for damage and faulty work, including the following:
1. Raceways.
2. Building wire and connectors.
3. Supporting devices for electrical components.
4. Electrical identification.
5. Electricity-metering components.
6. Concrete bases.
7. Electrical demolition.
8. Cutting and patching for electrical construction.
9. Touchup painting.

3.5 ELECTRICAL SUPPORTING DEVICE APPLICATION

A. Damp Locations and Outdoors: Hot-dip galvanized materials or nonmetallic, U-channel system components.

B. Dry Locations: Steel Materials.

C. Support Clamps for PVC Raceways: Click-type clamp system.

D. Selection of Supports: Comply with manufacturer's written instructions.

E. Strength of Supports: Adequate to carry present and future loads, times a safety factor of at least four; minimum of 200-lb design load.

3.6 SUPPORT INSTALLATION

A. Install support devices to securely and permanently fasten and support electrical components.

B. Install individual and multiple raceway hangers and rise clamps to support raceways. Provide U-bolts, clamps, attachments, and other hardware necessary for hanger assemblies and for securing hanger rods and conduits.

C. Support parallel runs of horizontal raceways together on trapeze-or bracket-type hangers.

D. Size supports for multiple raceway installations so capacity can be increased by 25 percent minimum in the future.

E. Support individual horizontal raceways with separate, malleable-iron pipe hangers or clamps.

F. Install 1/4-inch diameter or larger threaded steel hanger rods, unless otherwise indicated.

G. Spring-steel fasteners specifically designed for supporting single conduits or tubing may be used instead of malleable-iron hangers for 1-1/2-inch and smaller raceways serving lighting and receptacle branch circuits above suspended ceilings and for fastening raceways to slotted channel and angle supports.

H. Arrange supports in vertical runs so the weight of raceways and enclosed conductors is carried entirely by raceway supports, with no weight load on raceway terminals.

I. Simultaneously install vertical conductor supports with conductors.

J. Separately support cast boxes that are threaded to raceways and used for fixture support. Support sheetmetal boxes directly from the building structure or by bar hangers. If bar hangers are used, attaché bar to raceways on opposite sides of the box and support the raceway with an approved fastener not more than 24 inches from the box.

K. Install metal channel racks for mounting cabinets, panelboards, disconnect switches, control enclosures, pull and junction boxes, transformer, and other devices unless components are mounted directly to structural elements of adequate strength.

L. Install sleeves for cable and raceway penetrations of concrete slabs and walls unless core-drilled holes are used. Install sleeves for cable and raceway penetrations of masonry and fire-rated gypsum walls and of all other fire-rated floor and wall assemblies. Install sleeves during erection of concrete and masonry walls.

M. Securely fasten electrical items and their supports to the building structure, unless otherwise indicated. Perform fastening according to the following, unless other fastening methods are indicated.
1. Wood: Fasten with wood screws or screw-type nails.
2. Masonry: Toggle bolts on hollow masonry units and expansion bolts on solid masonry units. Plastic conical anchors are not allowed.
3. New Concrete: Concrete inserts with machine screws and bolts.
4. Existing Concrete: Steel expansion bolts.
5. Instead of expansion bolts, threaded studs driven by a powder charge and provided with lock washers may be used in existing concrete.
6. Steel: Welded threaded studs or spring-tension clamps on steel.
a. Field Welding: Comply with AWS D1.1.
7. Welding to steel structure may be used only for threaded studs, not for conduits, pipe straps, or other items.
8. Light Steel: Sheet-metal screws.
9. Fasteners: Select so the load applied to each fastener does not exceed 25 percent of its proof-test load.

SECTION 260500 CONTINUED

3.7 CLEANING AND PROTECTION

A. On completion of installation, including outlets, fittings, and devices, inspect exposed finish. Remove burrs, dirt, paint spots, and construction debris.

B. Protect equipment and installations and maintain conditions to ensure that coatings, finishes, and cabinets are without damage or deterioration at time of Substantial Completion.

END OF SECTION

SECTION 262416

PANEL BOARDS

PART 1 GENERAL

1.1 RELATED DOCUMENTS

A. The drawings and general provisions of the Contract Documents apply to this Section.

1.2 SUMMARY

A. This Section includes load centers and panelboards, overcurrent protective devices, and associated auxiliary equipment rated 600 V and less for the following types:
1. Lighting and appliance branch-circuit panelboards.
2. Distribution panelboards.

1.3 DEFINITIONS

A. EMI: Electromagnetic interference.

B. GFCI: Ground-fault circuit interrupter.

C. RFI: Radio-frequency interference.

D. RMS: Root mean square.

E. SPDT: Single pole, double throw.

1.4 SUBMITTALS

A. Product Data: For each type of panelboard, overcurrent protective device, accessory, and component indicated. Include dimensions and manufacturers' technical data on features, performance, electrical characteristics, ratings, and finishes.

B. Shop Drawings: For each panelboard and related equipment.
1. Dimensioned plans, elevations, sections, and details. Show tabulations of installed devices, equipment features, and ratings. Include the following:
a. Enclosure types and details for types other than NEMA 250, Type 1.
b. Bus configuration, current, and voltage ratings.
c. Short-circuit current rating of panelboards and overcurrent protective devices.
d. Features, characteristics, ratings, and factory settings of individual overcurrent protective devices and auxiliary components.

C. Field Test Reports: Submit written test reports and include the following:
1. Test procedures used.
2. Test results that comply with requirements.
3. Results of failed tests and corrective action taken to achieve test results that comply with requirements.

D. Panelboard Schedules: For installation in panelboards, submit final versions after load balancing.

1.5 QUALITY ASSURANCE

A. Electrical Components, Devices, and Accessories: Listed and labeled as defined in NFPA 70, Article 100, by a testing agency acceptable to authorities having jurisdiction, and marked for intended use.

B. Comply with NEMA PB 1.

C. Comply with NFPA 70.

1.6 COORDINATION

A. Coordinate layout and installation of panelboards and components with other construction that penetrates walls or is supported by them, including electrical and other types of equipment, raceways, piping, and encumbrances to workspace clearance requirements.

1.7 EXTRA MATERIALS

A. Key: Six spares of each type of panelboard cabinet lock.

PART 2 PRODUCTS

2.1 FABRICATION AND FEATURES

A. Enclosures: Surface mounted cabinets. NEMA PB 1, Type 1, to meet environmental conditions at installed location.

B. Front: Secured to box with concealed trim clamps. For surface-mounted fronts, match box dimensions; for flush-mounted fronts, overlap box.

C. Hinged Front Cover: Entire front trim hinged to box and with standard door within hinged trim cover.

D. Finish: Manufacturer's standard enamel finish over corrosion-resistant treatment or primer coat.

E. Directory Card: With transparent protective cover, mounted inside metal frame, inside panelboard door.

F. Bus: Hard-drawn copper, 98 percent conductivity.

G. Main and Neutral Lugs: Mechanical type suitable for use with conductor material.

H. Equipment Ground Bus: Adequate for feeder and branch-circuit equipment ground conductors; bonded to box.

I. Service Equipment Label: UL labeled for use as service equipment for panelboards with main service disconnect switches.

J. Future Devices: Mounting brackets, bus connections, and necessary appurtenances required for future installation of devices.

K. Gutter Barrier: Arrange to isolate individual panel sections.

VIRGINIA DEPARTMENT OF FIRE PROGRAMS

CITY OF WINCHESTER VIRGINIA PARK PAC 1744

TITLE: PROJECT SPECIFICATIONS

PROJECT: CITY OF WINCHESTER
BURN BUILDING
1716 WOODSTOCK LANE
WINCHESTER, VIRGINIA 22602

PAINTER-LEWIS, P.L.C.
817 CEDAR CREEK GRADE, SUITE #120
WINCHESTER, VIRGINIA 22601
TELEPHONE: (540) 662-5792
FACSIMILE: (540) 662-5793
EMAIL: office@painterlewis.com
CONSULTING ENGINEERS

REVISIONS

NO.	DATE

COMMONWEALTH OF VIRGINIA
TIMOTHY G. PAINTER
Lic. No. 018260
08/15/16
PROFESSIONAL ENGINEER

DRAWN BY: RJD
JOB NO.: 1511018

DATE: 08-15-2016

SCALE: AS NOTED

SHEET: A0.4d

2.2 PANELBOARD SHORT-CIRCUIT RATING

A. Fully rated to interrupt symmetrical short-circuit current available terminals.

2.3 LOAD CENTERS

A. Are not allowed.

2.4 LIGHTING AND APPLIANCE BRANCH-CIRCUIT PANELBOARDS

A. Branch Overcurrent Protective Devices: Bolt-on circuit breakers, replaceable without disturbing adjacent units.

B. Doors: Front mounted with concealed hinges; secured with flush latch with tumbler lock; keyed alike.

2.5 DISTRIBUTION PANELBOARDS

A. Doors: Front mounted, except omit in fused-switch panelboards; secured with vault-type latch with tumbler lock; keyed alike.

B. Main Overcurrent Protective Devices: Circuit breaker.

C. Branch overcurrent protective devices shall be one of the following:

1. For Circuit-Breaker Frame Sizes 125 A and Smaller: Bolt-on circuit breakers.
2. For Circuit Breaker Frame Sizes Larger Than 125 A: Bolt-on circuit breakers: plug-in circuit breakers where individual positive-locking device requires mechanical release for removal.

2.6 OVERCURRENT PROTECTIVE DEVICES

A. Molded-Case Circuit Breaker: NEMA AB 1, with interrupting capacity to meet available fault currents.
1. Thermal-Magnetic Circuit Breakers: Inverse time-current element for low-level overloads, and instantaneous magnetic trip element for short circuits. Adjustable magnetic trip setting for circuit breaker frame sizes 250 A and larger.

B. Molded-Case Circuit-Breaker Features and Accessories. Standard frame sizes, trip ratings, and number of poles.
1. Lugs: Mechanical style, suitable for number, size, trip ratings, and material of conductors.
2. Application Listing: Appropriate for application; Type SWD for switching fluorescent lighting loads; Type HACR for heating, air-conditioning, and refrigerating equipment.

2.7 CONTROLLERS

A. Motor Controllers: NEMA ICS 2, Class A combination controller equipped for panelboard mounting and including the following accessories:
1. Individual control-power transformers.
2. Fuses for control-power transformers.
3. Bimetallic-element overload relay.
4. Melting-alloy overload relay.
5. Indicating lights.
6. Seal-in contact.
7. Push buttons.
8. Selector switches.

2.8 ACCESSORY COMPONENTS AND FEATURES

A. Accessory Set: Tools and miscellaneous items required for over current protective device test, inspection, maintenance, and operation.

B. Fungus Proofing: Permanent fungicidal treatment for panelboard interior, including overcurrent protective devices and other components.

PART 3 - EXECUTION

3.1 INSTALLATION

A. Install panelboards accessories according to NEMA PB1.1.

B. Mounting Heights; Top of trim 74 inches above finished floor, unless otherwise indicated.

C. Mounting: Plumb and rigid without distortion of box. Mount recessed panelboards with fronts uniformly flush with wall finish.

D. Circuit Directory: Create a directory to indicate installed circuit loads after balancing panelboard loads. Obtain approval before installing. Use a computer or typewriter to create directory; handwritten directories are not acceptable. Directory shall indicate Owners actual space designations, not those space designations indicated in the Contract Documents.

E. Install filler plates in unused spaces.

F. Wiring in Panelboard Gutters: Arrange conductors into groups and bundle and wrap with wire ties after completing load balancing.

3.2 IDENTIFICATION

A. Panelboard Nameplates: Label each panelboard with engraved metal or laminated-plastic nameplate mounted with corrosion-resistant screws.

3.3 CONNECTIONS

A. Install equipment grounding connections for panelboards with ground continuity to main electrical ground bus.

B. Tighten electrical connectors and terminals according to manufacturer's published torque-tightening values. If manufacturer's torque values are not indicated, use those specified in UL 486A and UL 486B.

3.4 FIELD QUALITY CONTROL

A. Prepare for acceptance tests as follows:
1. Test insulation resistance for each panelboard bus, component, connecting supply, feeder, and control circuit.
2. Test continuity of each circuit.

B. Testing: After installing panelboards and after electrical circuitry has been energized, demonstrate product capability and compliance with requirements.
1. Procedures: Perform each visual and mechanical inspection and electrical test indicated in NETA ATS, Section 7.5 for switches and Section 7.6 for molded-case circuit breakers. Certify compliance with test parameters.
2. Correct malfunctioning units on-site, where possible, and retest to demonstrate compliance; otherwise, replace with new units and retest.

C. Balance Loads: After Substantial Completion, but not more than 60 days after Final Acceptance, measure load balancing and make circuit changes as follows:
1. Measure as directed during period of normal system loading.
2. Perform load-balancing circuit changes outside normal occupancy/working schedule of the facility and at time directed. Avoid disrupting critical 24-hour services such as fax machines and on-line data-processing, computing, transmitting, and receiving equipment.
3. After circuit changes, recheck loads during normal load period. Record all load readings before and after changes and submit test records.
4. Tolerance: Difference exceeding 20 percent between phase loads, within a panelboard, is not acceptable. Rebalance and recheck as necessary to meet this minimum requirement.

3.5 CLEANING

A. On completion of installation, inspect interior and exterior of panelboards. Remove paint splatters and other spots. Vacuum dirt and debris; do not use compressed air to assist in cleaning. Repair exposed surfaces to match original finish.

END OF SECTION

DIVISION 27 - COMMUNICATIONS

NOT APPLICABLE

DIVISION 28 -ELECTRONIC SAFETY AND SECURITY

NOT APPLICABLE

DIVISIONS 29 - 30

RESERVED FOR FUTURE EXPANSION

DIVISION 31 - EARTHWORK

NOT IN CONTRACT
(SEE SITE PLAN)

DIVISION 32 - EXTERIOR IMPROVEMENTS

NOT APPLICABLE

DIVISION 33 - UTILITIES

NOT IN CONTRACT
(SEE SITE PLAN)

DIVISION 34 - TRANSPORTATION

NOT APPLICABLE

DIVISION 35 - WATERWAY AND MARINE CONSTRUCTION

NOT APPLICABLE

DIVISIONS 36 - 40

RESERVED FOR FUTURE EXPANSION

DIVISION 40 - PHYSICAL PROCESS MEASUREMENT DEVICES

SECTION 409119

TEMPERATURE MONITORING EQUIPMENT

PART 1 GENERAL

1.1 RELATED DOCUMENTS

A. Drawing and general provisions of the Contract, including General and Supplementary Conditions and Division 1 Specification Section, apply to this Section.

1.2 SUMMARY

A. This Section includes requirements for the temperature monitoring system, including:
1. Central Recorder
2. Thermocouples
3. Extension wire connecting thermocouples to central recorder
4. Enclosure with heater

1.3 RELATED SECTIONS

A. See Division 26 - Electrical for electrical wiring, conduit, junction boxes, and other miscellaneous electrical equipment.

1.4 PERFORMANCE REQUIREMENTS

A. Temperature monitoring system shall be specifically manufactured for and capable of registering and displaying temperatures in the training structure during live fire training:
1. Temperature range during normal operating conditions at the central recorder: 40°F to 120°F.
2. Temperature range during normal operating conditions at the thermocouples: 32°F to 2,300°F.

B. Central recorder shall be capable of scanning and recording temperature readings from a minimum of six (6) thermocouples. Recorder model and requirements have been pre-approved by the Virginia department of Fire Programs.
1. Central recorder shall have a digital display that indicates readings during operation. Digital display shall be capable of displaying a minimum of 6 channels simultaneously and shall be readable at three feet line of sight. The display shall be readable in direct sunlight for exterior installations. The display shall have back lighting or be bright enough to read in low level light conditions such as a mechanical room. The unit shall be capable of scanning continuously through readings from all of the thermocouples. The scanning feature shall be capable of being programmed so that different thermocouples can be scanned during different training evolutions.
2. Control of the central recorder shall be local and not require the use of an interface. Operation of the instrument shall be accomplished through either a touch screen or push button interface.
3. Central recorder shall be capable of recording the total number of sensors installed in the burn building.
4. Central recorder shall be capable of recording all of the channels at a 10 second or less interval.
5. Central recorder shall be capable of storing data on removable storage media, such as PCMCIA/compact flash cards or USB Flash Drives.
6. Central recorder shall interface with a computer via standard wireless interface, Ethernet, USB, or RS-232, or RS-485.
7. Central recorder shall have at least one output to control an alarm. Each channel shall have an independent high set point.

8. Central recorder shall be capable of displaying and recording temperatures in degrees Fahrenheit and, if also available, degrees Celsius.
9. Central recorder shall be supplied with software that can display the burn data in either a graphical or tabular format. The software shall be capable of exporting the data in a csv, txt or other format compatible with commercially available spread sheet software.
10. Central recorder shall have an on/off switch.
11. Data recording will start at central recorder power on or by a single record command.
12. Central recorder shall have sufficient internal memory to store at least 24 hours of continuous measurement data for all connected channels based on 1 second sampling interval. The data shall have a date and time stamp. All of the data shall also be stored on an external flash drive or other type of permanent memory storage. Central recorder shall be capable of transferring or dumping data to an external storage device without erasing the internal memory.
13. Loss of power or turning the unit to the off position shall not affect the internal memory. A secondary back up power source is not permitted as an alternative.
14. Central recorder shall have open thermocouple detection and in the event a sensor fails, the instrument shall initiate an alarm condition.
15. Data management
a. All data should be stored in a non-volatile internal memory continuously throughout the training period.
b. All data should be date and time stamped specific.
c. All data shall be transferred to a permanent storage media. The memory shall be sufficient to hold at least 30 days of continuous data.
d. The data may also be downloaded via connection to a computer. The data should be exported and stored in a usable format compatible with commercially available spread sheet programs.
e. Burn Record
a. In addition to the electronic data a manual log of all burns should be maintained. It should contain the date of each burn and the start and stop time of each evolution, as well as the maximum temperature reached.

C. Locations of thermocouples shall be as indicated in the drawings.

D. Wiring, conduit, and other miscellaneous electrical items shall be protected from high temperatures by installing them outside of the training structure or behind thermal linings inside the training structure, as indicated on the drawings and in Division 26.

1.5 CLASS B FUEL BURN BUILDING PROPS

A. System Interface
1. The temperature monitoring and recording system is intended to be a separate system from the gas burn prop control system.

1.6 SUBMITTALS

A. General: Submit each item in this Article according to the Conditions of the Contract and Division 1 Specification Sections.

B. Product data for central recorder, thermocouples, wiring, and NEMA enclosure.

C. Warranties for central recorder and thermocouples.

D. Maintenance and operations manuals for central recorder and thermocouples.

PART 2 - PRODUCTS

2.1 CENTRAL RECORDER

A. Manufacturers:
1. Fire Facilities
2. Or an Approved Equal.

2.2 THERMOCOUPLES

A. Type K sensors (ASTM E230) shall be used for ceiling and wall mount installations meeting the following criteria:
1. Sensors shall be ungrounded according to ASTM E608.
2. Sensor sheath shall be suitable for operation from ambient to 2300 °F and shall be 310SS or Inconel 600.
3. Sensors shall be 1/8 nominal diameter with a transition fitting not larger than 3/8 nominal diameter and 2 long. The maximum exposure temperature of the transition fitting shall be greater than 250°F.
4. Lead wire for the sensors shall be 20 gauge glass over glass construction length as required by drawings and field conditions, minimum 4 inches.
5. Each sensor shall be terminated using a standard thermocouple plug having type K terminals complying with ASTM 1129.
6. Available Products: Subject to compliance with requirements, products that may be incorporated in the Work include, but are not limited to, the following:

Manufacturers:
1. Fire Facilities
2. Or an Approved Equal.

2.3 EXTENSION WIRE CONNECTING THERMOCOUPLES TO CENTRAL RECORDER

A. All connecting wire between the NEMA enclosure and the thermocouple sensor shall be run in rigid conduit.
1. All conduit connections should be sealed and free of obstruction.
2. Connections to the TMS enclosure should be made through the bottom of the box using water tight fittings.
3. Conduit junction should be taped where the fittings will be within wet concrete.
4. Single runs from each junction box in a room should be made directly to the TMS enclosure.
5. Close bends and pull boxes are not permitted. Sweeping bends shall be made at all 90° corners.

B. Extension wire shall be 20 Gauge solid wire with a glass/glass color coded covering with a classification of A Duplex or E Duplex according to ASTM E574.

C. Extension wire shall be capable of continuous operation at 650 °F or higher and meet all other performance requirements of E574.

D. Extension wire shall meet the calibration tolerances specified in Table 1 of ASTM E230.

Manufacturers:
1. Fire Facilities
2. Or an Approved Equal.

2.4 ENCLOSURE WITH HEATER

A. Enclosure shall be a NEMA 4 or 4X rated enclosure with a lockable clear plexiglass full front cover at indicated location. The enclosure shall provide easy access to the front of the data recorder as well as the rear for wiring termination. The enclosure shall include a top mounted high intensity strobe light with audible alarm and silence push button if the central recorder does not provide its own alarm indication.

B. The enclosure shall be capable of supporting both portable and permanent mountings.

C. A two position power on/off switch shall be provided. Power shall include a surge protector.

D. Heater for the NEMA enclosure shall be installed to protect the system from moisture and possible damage due to low temperatures. The heater shall be set for 50°F to 60°F. The wattage of the heater shall be determined based on the size of the enclosure. The enclosure heater shall be either convection or forced air type, 115V electric heater.

Manufacturers:
1. Fire Facilities
2. Or an Approved Equal.

2.5 ALARMS

A. An audio visual alarm indicating that that the high set point has been reached will be supplied and mounted on the exterior of the building. It shall have a red flashing strobe and audible alarm of 85 dB or greater.

B. The alarm may be either DC or AC powered but the AC version shall not exceed a 110VAC 3 AMP requirement.

C. An audio visual alarm will also be mounted on the TMS enclosure if the recorder does not have its own alarm indication.

Manufacturers:
1. Fire Facilities
2. Or an Approved Equal.

PART 3 - EXECUTION

3.1 CENTRAL RECORDER

A. Install central recorder in either a permanent or portable mount in accordance with manufacturer's requirements inside NEMA enclosure.

B. Mount central recorder according to the instrument manufacturer's guidelines.

C. Central recorder shall be grounded to the panel and earth ground. It shall also be current limited by fuse or breaker according to the instrument specifications.

D. For portable central recorders, the instrument shall be placed in the NEMA enclosure during the live fire training. It shall have its own case and all connections shall be clearly marked. All sensors shall be connected for each burn regardless of which room the burn is being performed in, connecting select channels is not permitted. Further, the portable central recorder shall be connected to the alarm indicator.

3.2 THERMOCOUPLE

A. Install thermocouples as shown on the drawings. Connect lead wire to extension wire as indicated.

B. All sensors should be mounted using a combination of compression fittings, boxes and mounting plates that result in a water tight connection.

C. Sensors mounted behind the thermal linings do not require mounting using compression fittings and can be mounted using other methods. They can be mounted to the refractory tile and do not have to be attached to the structure.

D. Sensors shall be installed in a manner that protects the back section of the sensor from temperatures that exceed its specified operating temperature. See sheets E1.0 and E2.0 of the construction drawings for additional mounting information.

E. Ceiling sensors should be mounted no more than 6 feet from center of the burn location.

F. Wall sensors should be mounted no more than 6 feet from center of the burn location and on the wall adjoining the corner where the majority of burns will be conducted. The wall sensors shall be mounted between 36 and 48 above finished floor.

G. All sensors should protrude at least 2 from the mounting and at least ½ beyond and guards or shields.

H. Gas Safety Sensor Location
a. The gas safety sensor should be located approximately 5 feet above the floor and where practical not more than 6 feet from the burn prop. The sensor shall be exposed and cannot be covered by metal protectors. The sensor should at least 2 off the wall.

3.3 EXTENSION WIRE CONNECTING THERMOCOUPLES TO CENTRAL RECORDER

A. Run extension wire from connection point between lead wire and extension wire to central recorder panel within conduit as indicated. Follow manufacturer's requirements and requirements of Division 26.

B. Connect extension wires from each thermocouple to central recorder.

C. The extension wire shall be carefully installed to prevent any damage to the outer wire sheath material.

D. All connections in the panel shall be made using type K connectors or terminal strips.

E. Type K extension wire shall be connected directly to the instrument panel.

F. All connections at the sensor shall be made using type K connectors. Where standard connectors cannot be used other type K compensated connections are permissible.

G. All ends of the glass wire in the panel shall be covered with shrink tube to minimize fraying of the glass covering. High temperature tubing shall protect the wire at the jack connection.

3.4 NEMA ENCLOSURE WITH HEATER

A. Mount enclosure heater inside the NEMA enclosure following all manufacturer requirements.

3.5 ALARMS

A. The alarm shall be installed on the outside of the building in a visible area near the mechanical room. It should be mounted at an elevation of 84 and it should not protrude more than 15 from the structure.

3.6 CALIBRATION AND TESTING

A. System
1. At initial installation and at the prescribed interval the recording system shall be tested. The inputs shall be tested using an appropriate calibrator. The alarm outputs and data storage should be verified. All panel enunciators or audio visual alarms shall be verified.
2. The system shall be tested as a complete loop. A heat source with a known temperature shall be applied to each sensor and the readings recorded. A minimum of two temperatures shall be tested, one at 1/3 of span and one at 2/3 of span. The loop resistance at room temperature shall also be recorded.
3. Calibrate and test temperature monitoring system in accordance with manufacturer's requirements. Program central recorder to tailor the system to the requirements of the Owner's training program.
4. Function Tests
a. The TMS should be tested for functionality before every burn. All sensors should be reading and the alarm should be in working order.
5. Physical Tests
a. Diagnostic tests as determined by a service professional should be performed annually. Those tests should be performed in accordance with ASTM E1350, E780, and E2846.
6. Physical Inspection
a. At least annually the thermocouples shall be visually inspected for damage. The protective plates and tiles shall be removed and the insulation, connection and sensor assessed. The wires insulation and thermal insulation shall be inspected to verify that it is intact and dry. None of the materials should be melted or compromised physically.
7. Calibration
a. Calibrate system at least annually. Each sensor shall be tested at specific points using a loop test. A report of test and calibration shall be provided for all new equipment installations and at least annually for existing systems. A report of test and calibration must be supplied any time service to the TMS is performed.

B. Thermocouple
1. Loop Resistance
a. The ambient temperature loop resistance in ohms should be measured in accordance with ASTM E1350.
2. Insulation Resistance
a. The insulation resistances should be measured according to ASTM E780 and meet the requirements set forth in ASTM E608 1000 Meg-Ohms @ 500Volts DC. For Un-Grounded Sensors Only.
3. Sensor Calibration
a. The sensors shall meet standard limits of error calibration tolerance when new. Tolerances are specified in ASTM E230. The allowable loop temperature error for any sensor shall meet the standard tolerance requirement. Used thermocouples shall meet a 1% tolerance of full span.
4. Gas Safety Thermocouple Testing
a. Gas prop safety thermocouple sensors shall be tested for function when installed and at the prop manufacturers specification or once a year whichever is less.

C. Extension Wiring
1. Electrical Assessment
a. Shorts to Ground
i. Each leg of the extension wire shall be tested to assure there is no connection to the building ground. There shall not be a connection between the extension wire and the conduit.
b. Loop Resistance
i. The loop resistance in ohms shall be tested and the value verified to be consistent with typical values for the estimated length of the extension wire.

D. Alarms
1. A functional test shall be performed to assure the alarm is working properly. It shall be tested at a preset temperature using the alarm output from the recorder. An optional emergency alarm trip can be installed to allow the alarm to be manually activated by anyone operating the TMS.

3.7 DEMONSTRATION AND TRAINING PERIOD

A. Provide one qualified person for a minimum of one full day to demonstrate the system and train Owner's personnel in use and maintenance of system. The amount of training time required depends on the complexity of the system.

B. Department personnel will be trained on the operation of the monitoring/recording system. In addition they will be instructed on how the system functions and given specific instruction on maintaining data integrity.

C. The first live burn test of the system should be made independently of training and for the sole purpose of testing the system under live conditions.

END OF SECTION

VIRGINIA DEPARTMENT OF FIRE PROGRAMS

CITY OF WINCHESTER VIRGINIA

TITLE: PROJECT SPECIFICATIONS

PROJECT:
CITY OF WINCHESTER
BURN BUILDING
1716 WOODSTOCK LANE
WINCHESTER, VIRGINIA 22602

PAINTER-LEWIS, P.L.C.
817 CEDAR CREEK GRADE, SUITE #120
WINCHESTER, VIRGINIA 22601
TELEPHONE: (540) 662-5792
FACSIMILE: (540) 662-5793
EMAIL: office@painterlewis.com
CONSULTING ENGINEERS

REVISIONS

NO.	DATE

COMMONWEALTH OF VIRGINIA
TIMOTHY C. PAINTER
Lic. No. 018260
08/15/16
PROFESSIONAL ENGINEER

DRAWN BY: RJD
JOB NO.: 1511018
DATE: 08-15-2016
SCALE: AS NOTED
SHEET: A0.4e

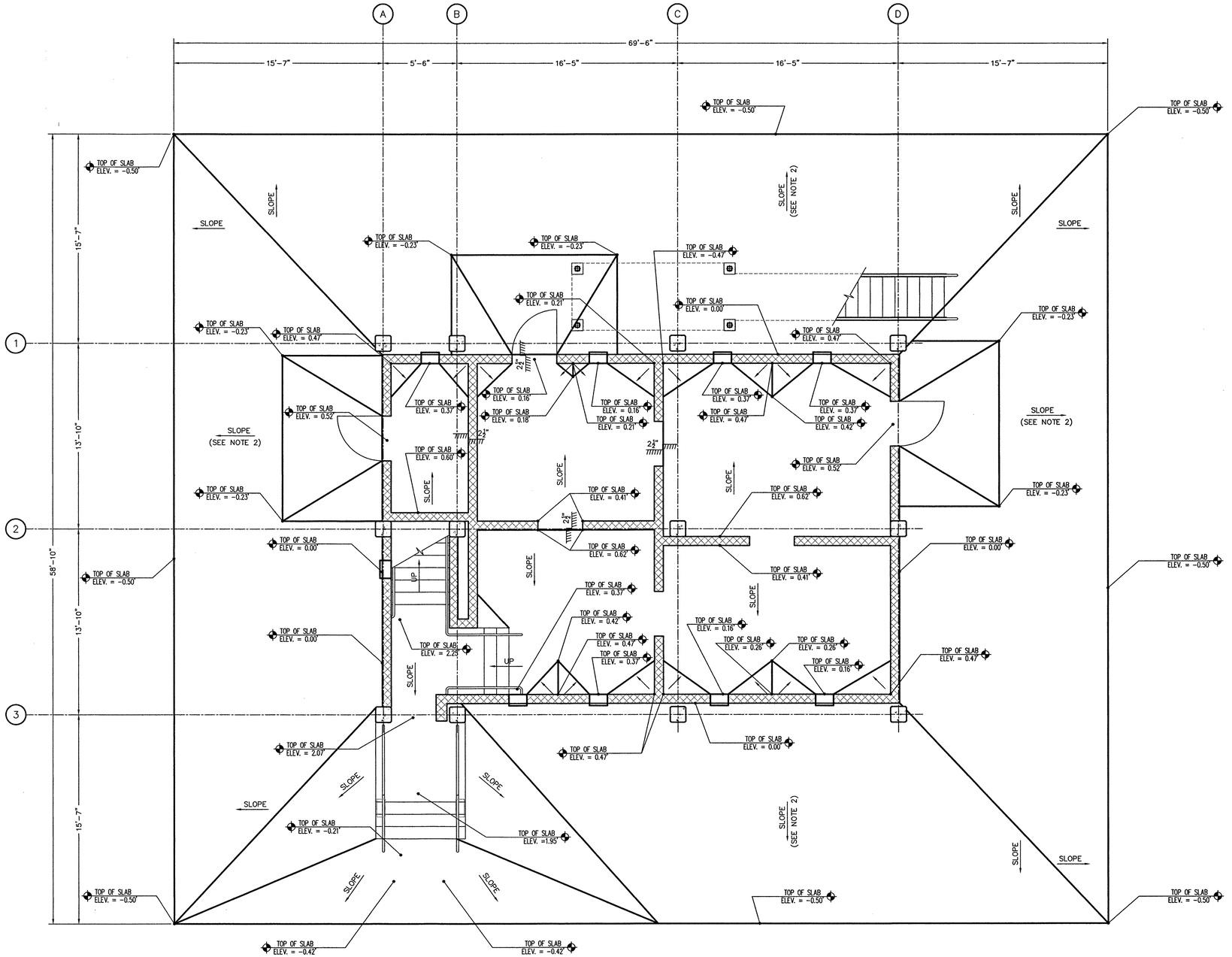

SLAB ELEVATION PLAN

SCALE: 1/4"=1'-0"

NOTES:
1. SLAB TURNDOWNS AND JOINTS ARE NOT SHOWN FOR CLARITY, SEE SHEET S1.0 FOR ADDITIONAL INFORMATION.
2. PROVIDE MINIMUM SLOPE TO DRAIN OF ¼" PER FT.
3. BUILDING DATUM: 667.25' = (0.00').
4. THE SITE PLAN GRADES ARE TO BE USED FOR ROUGH GRADING. USE THIS SHEET TO CONSTRUCT THE FLOOR SLAB AND EXTERIOR APRON.

VIRGINIA DEPARTMENT OF FIRE PROGRAMS

CITY OF WINCHESTER VIRGINIA

TITLE: SLAB ELEVATION PLAN (BASE BID)

PROJECT:
CITY OF WINCHESTER
BURN BUILDING
1716 WOODSTOCK LANE
WINCHESTER, VIRGINIA 22602

PAINTER-LEWIS, P.L.C.
CONSULTING ENGINEERS
817 CEDAR CREEK GRADE, SUITE #120
WINCHESTER, VIRGINIA 22601
TELEPHONE: (540) 662-5792
FACSIMILE: (540) 662-5793
EMAIL: office@painterlewis.com

REVISIONS

NO.	DATE

COMMONWEALTH OF VIRGINIA
TIMOTHY G. PAINTER
Lic. No. 018260
08/15/16
PROFESSIONAL ENGINEER

DRAWN BY: RJD
JOB NO.: 1511018
DATE: 08-15-2016
SCALE: AS NOTED
SHEET: A1.0

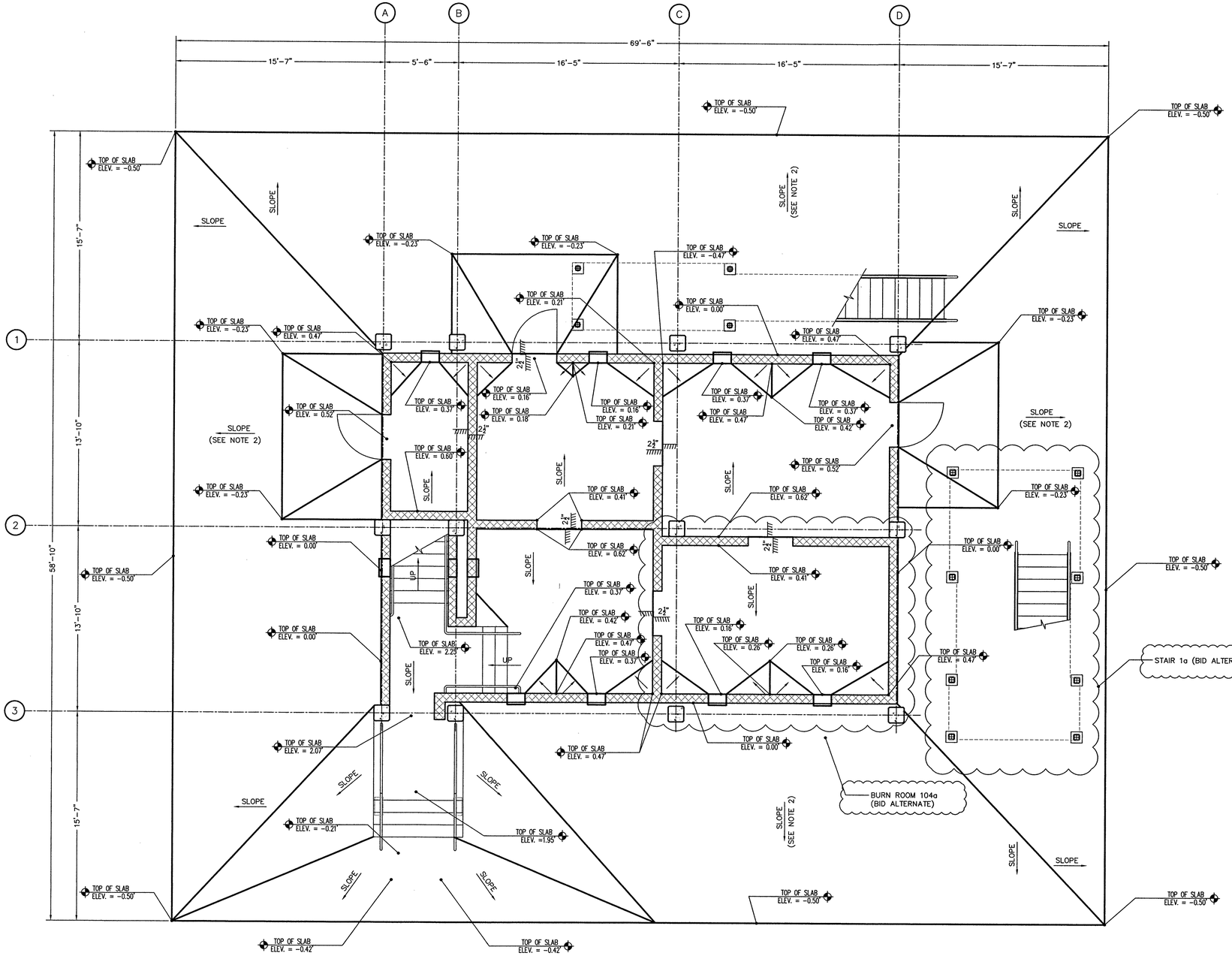

SLAB ELEVATION PLAN

SCALE: 1/4"=1'-0"

NOTES:
1. SLAB TURNDOWNS AND JOINTS ARE NOT SHOWN FOR CLARITY, SEE SHEET S1.0 FOR ADDITIONAL INFORMATION.
2. PROVIDE MINIMUM SLOPE TO DRAIN OF ¼" PER FT.
3. BUILDING DATUM: 667.25' = (0.00').
4. THE SITE PLAN GRADES ARE TO BE USED FOR ROUGH GRADING. USE THIS SHEET TO CONSTRUCT THE FLOOR SLAB AND EXTERIOR APRON.

BID ALTERNATE NOTE:
ALL ELEMENTS WITHIN THE CLOUDED AREAS SHALL BE INCLUDED IN THAT RESPECTIVE ALTERNATE BID ITEM.

VIRGINIA DEPARTMENT OF FIRE PROGRAMS

CITY OF WINCHESTER VIRGINIA

TITLE:
SLAB ELEVATION PLAN
(ALTERNATE BID)

PROJECT:
CITY OF WINCHESTER
BURN BUILDING
1716 WOODSTOCK LANE
WINCHESTER, VIRGINIA 22602

PAINTER-LEWIS, P.L.C.
817 CEDAR CREEK GRADE, SUITE #120
WINCHESTER, VIRGINIA 22601
TELEPHONE: (540) 662-5792
FACSIMILE: (540) 662-5793
EMAIL: office@painterlewis.com
CONSULTING ENGINEERS

REVISIONS

NO.	DATE

COMMONWEALTH OF VIRGINIA
TIMOTHY G. PAINTER
Lic. No. 018260
08/15/16
PROFESSIONAL ENGINEER

DRAWN BY: RJD
JOB NO.: 1511018
DATE: 08-15-2016
SCALE: AS NOTED
SHEET: A1.0a

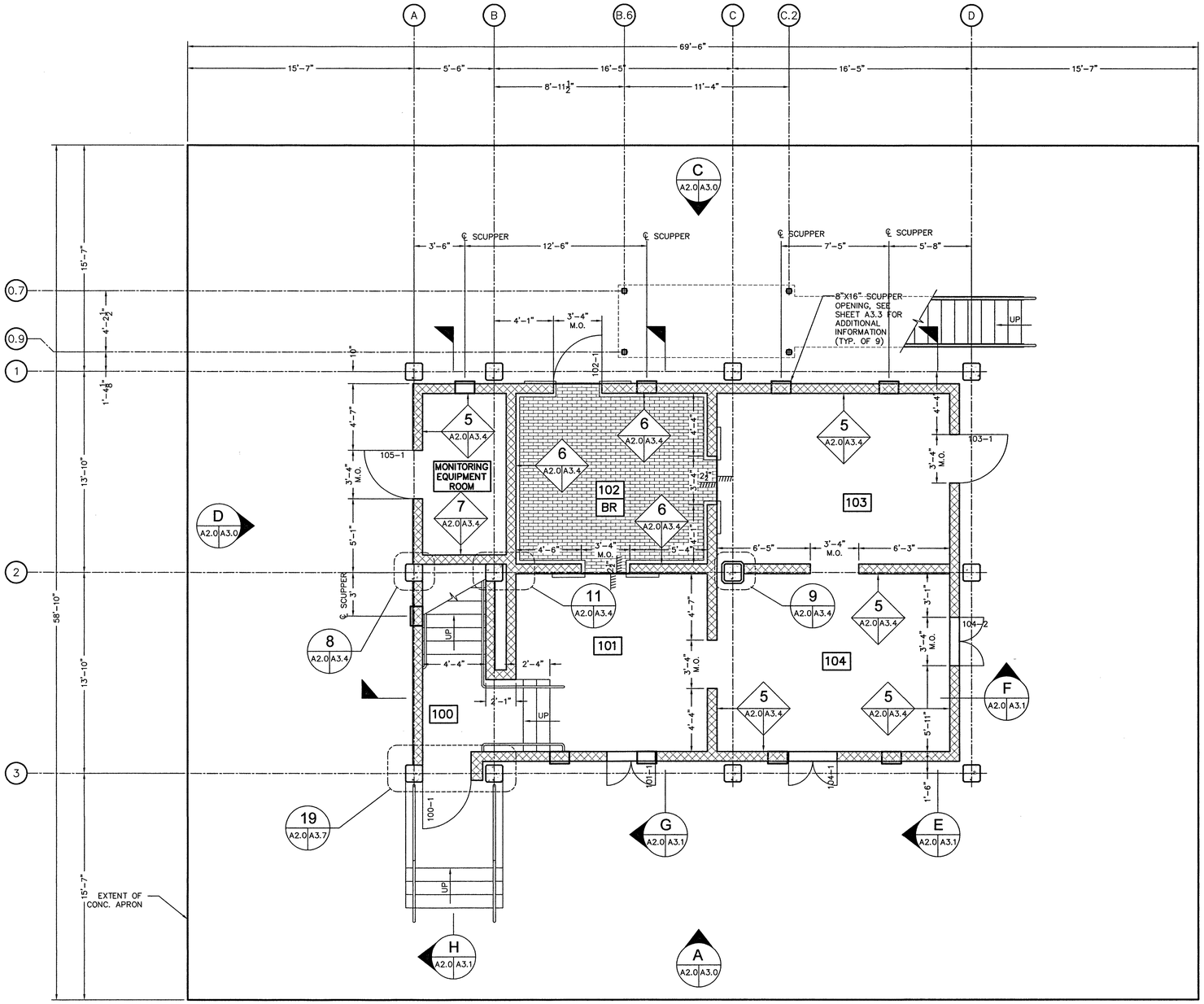

FIRST FLOOR PLAN

SCALE: 1/4"=1'-0"

NOTES:
1. ROOMS 102 & 104 ARE THE BURN ROOMS. NO BURNING IS ALLOWED IN ROOMS 101 & 103, THE MONITORING EQUIPMENT ROOM, OR ON THE STAIRS OR LANDING.
2. SEE SLAB ELEVATION PLAN ON SHEET A1.0 FOR ELEVATION OF CONCRETE SLABS-ON-GRADE.
3. BEFORE FABRICATION; CONTACT MR. SCOTT E. KENSINGER, DEPUTY CHIEF OF OPERATIONS AT (540) 662-2298 FOR COORDINATION OF THE PIPING AND FITTINGS TO BE USED.

VIRGINIA DEPARTMENT OF FIRE PROGRAMS

CITY OF WINCHESTER VIRGINIA

TITLE:
FIRST FLOOR PLAN
(BASE BID

PROJECT:
CITY OF WINCHESTER
BURN BUILDING
1716 WOODSTOCK LANE
WINCHESTER, VIRGINIA 22602

PAINTER-LEWIS, P.L.C.
817 CEDAR CREEK GRADE, SUITE #120
WINCHESTER, VIRGINIA 22601
TELEPHONE: (540) 662-5792
FACSIMILE: (540) 662-5793
EMAIL: office@painterlewis.com
CONSULTING ENGINEERS

REVISIONS

NO.	DATE

COMMONWEALTH OF VIRGINIA
TIMOTHY G. PAINTER
Lic. No. 018260
08/15/16
PROFESSIONAL ENGINEER

DRAWN BY: RJD
JOB NO.: 1511018
DATE: 08-15-2016
SCALE: AS NOTED
SHEET: A2.0

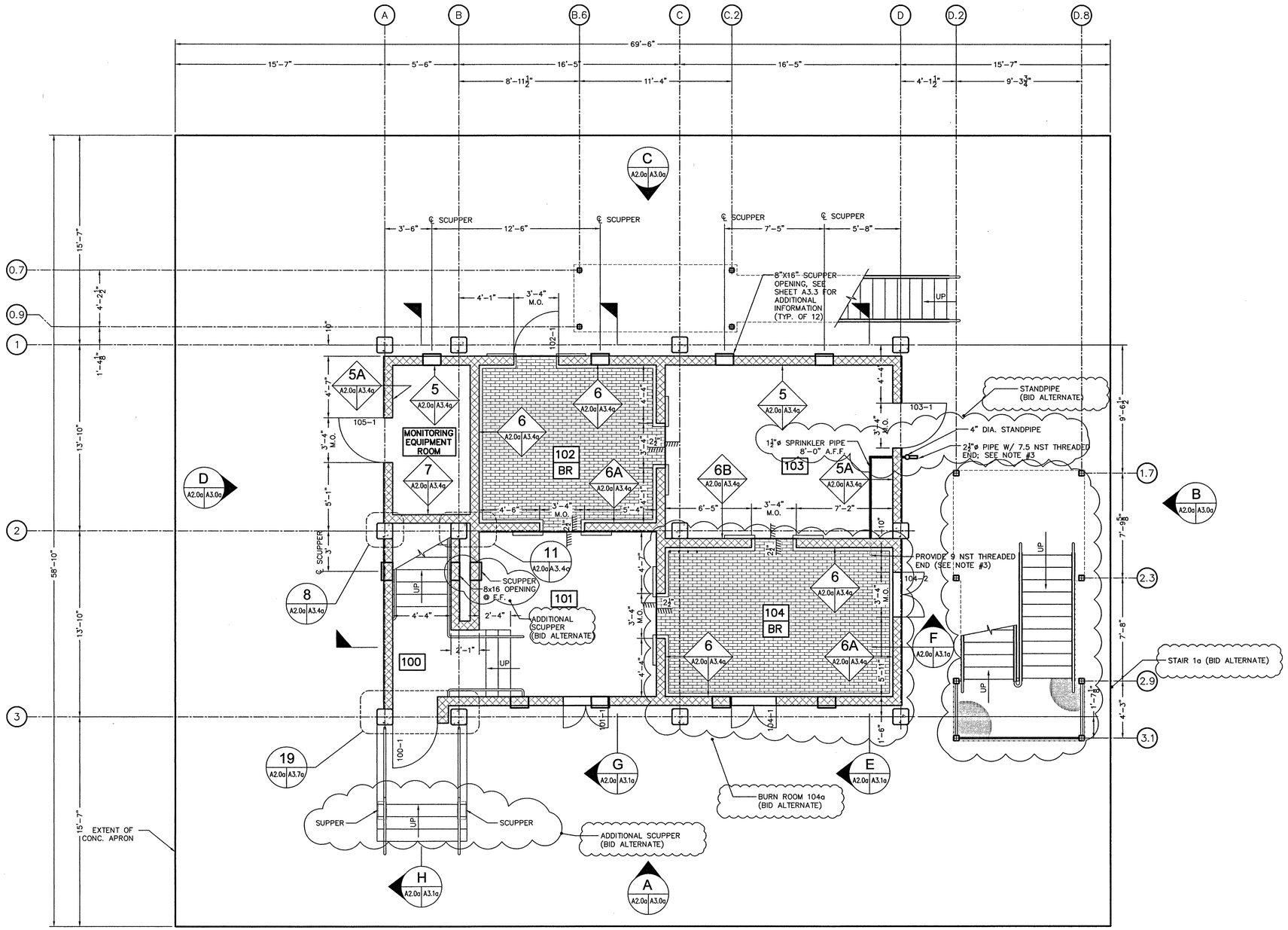

FIRST FLOOR PLAN

SCALE: 1/4"=1'-0"

NOTES:
1. ROOMS 102 & 104 ARE THE BURN ROOMS. NO BURNING IS ALLOWED IN ROOMS 101 & 103, THE MONITORING EQUIPMENT ROOM, OR ON THE STAIRS OR LANDING.
2. SEE SLAB ELEVATION PLAN ON SHEET A1.0 FOR ELEVATION OF CONCRETE SLABS-ON-GRADE.
3. BEFORE FABRICATION; CONTACT MR. SCOTT E. KENSINGER, DEPUTY CHIEF OF OPERATIONS AT (540) 662-2298 FOR COORDINATION OF THE PIPING AND FITTINGS TO BE USED.

BID ALTERNATE NOTE:
ALL ELEMENTS WITHIN THE CLOUDED AREAS SHALL BE INCLUDED IN THAT RESPECTIVE ALTERNATE BID ITEM.

VIRGINIA DEPARTMENT OF FIRE PROGRAMS

CITY OF WINCHESTER VIRGINIA

TITLE:
FIRST FLOOR PLAN
(ALTERNATE BID)

PROJECT:
CITY OF WINCHESTER
BURN BUILDING
1716 WOODSTOCK LANE
WINCHESTER, VIRGINIA 22602

PAINTER-LEWIS, P.L.C.
817 CEDAR CREEK GRADE, SUITE #120
WINCHESTER, VIRGINIA 22601
TELEPHONE: (540) 662-5792
FACSIMILE: (540) 662-5793
EMAIL: office@painterlewis.com
CONSULTING ENGINEERS

REVISIONS

NO.	DATE

COMMONWEALTH OF VIRGINIA
TIMOTHY G. PAINTER
Lic. No. 018260
08/15/16
PROFESSIONAL ENGINEER

DRAWN BY: RJD
JOB NO.: 1511018
DATE: 08-15-2016
SCALE: AS NOTED
SHEET: A2.0a

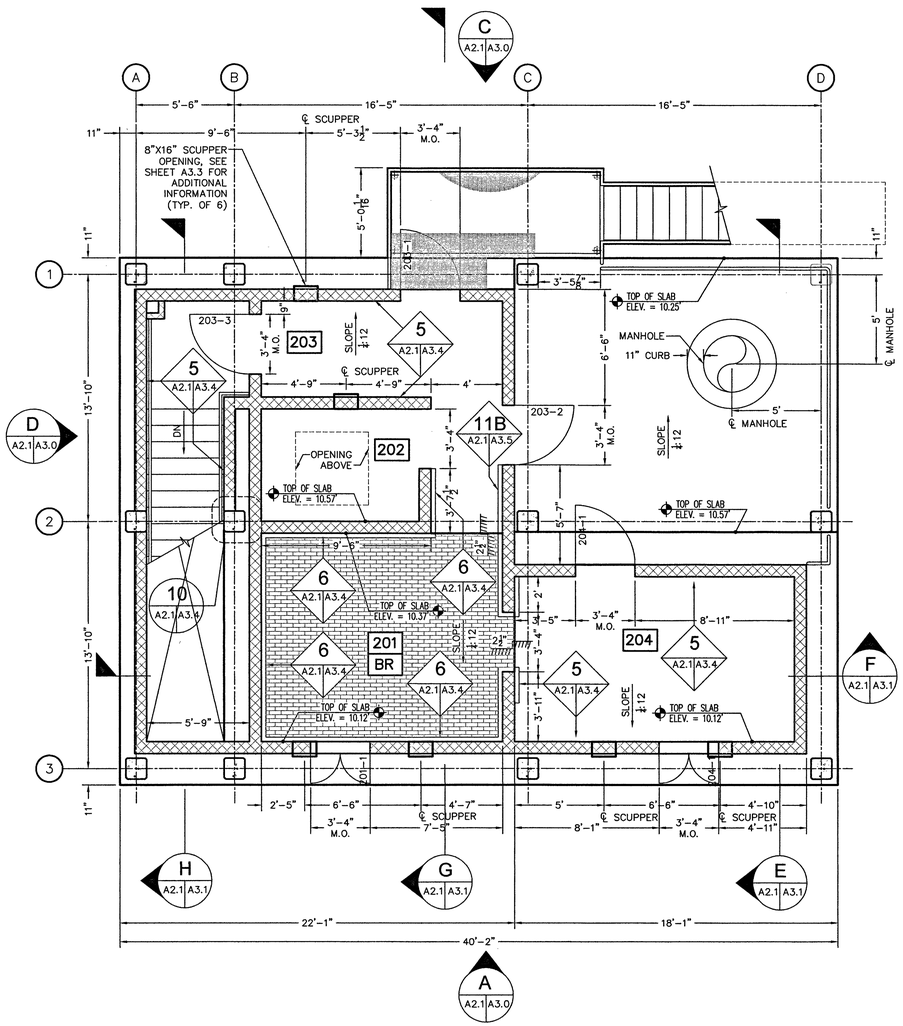

SECOND FLOOR PLAN

SCALE: 1/4"=1'-0"

NOTES:
1. ROOMS 201 & 204 ARE THE BURN ROOMS. NO BURNING IS ALLOWED IN ROOMS 202 & 203, OR ON THE STAIRS OR LANDING.
2. REFER TO SHEET A3.0 FOR INDUSTRIAL POST AND GUARDRAIL ELEVATION LOCATIONS.
3. BEFORE FABRICATION; CONTACT MR. SCOTT E. KENSINGER, DEPUTY CHIEF OF OPERATIONS AT (540) 662-2298 FOR COORDINATION OF THE PIPING AND FITTINGS TO BE USED.

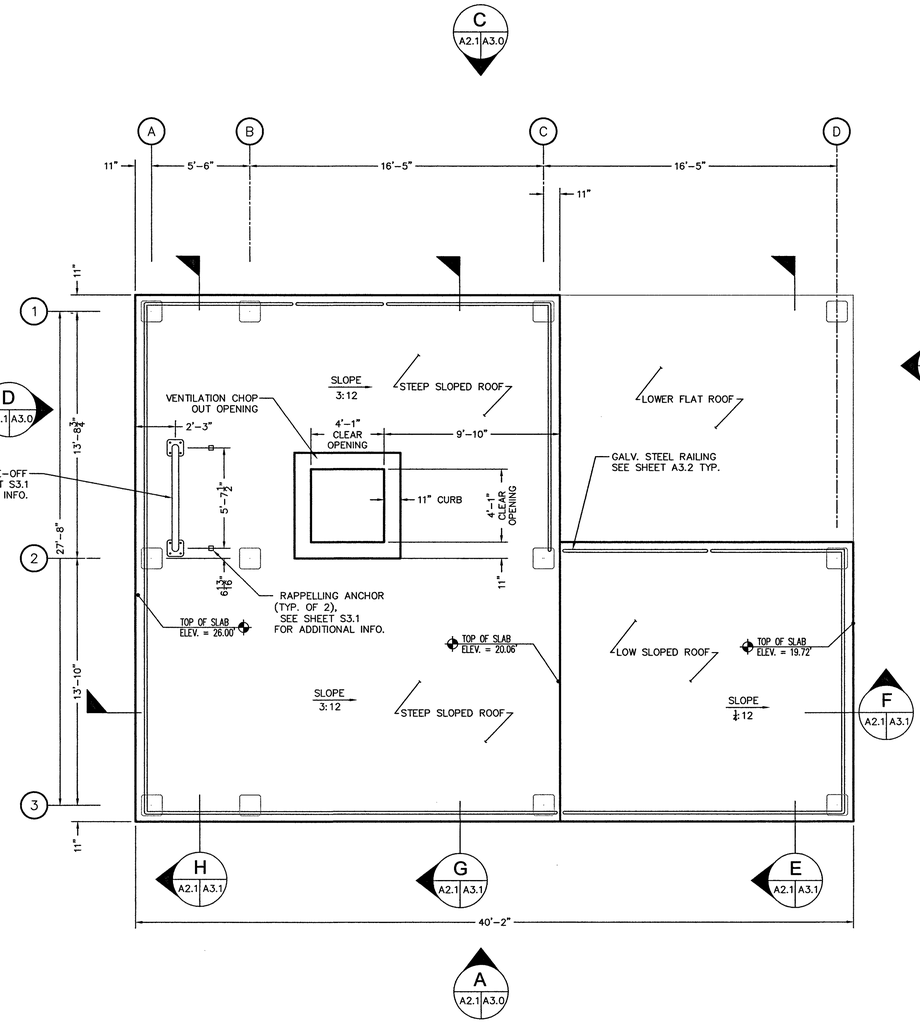

ROOF PLAN

SCALE: 1/4"=1'-0"

TITLE: SECOND FLOOR AND ROOF PLANS (BASE BID)

PROJECT:
CITY OF WINCHESTER
BURN BUILDING
1716 WOODSTOCK LANE
WINCHESTER, VIRGINIA 22602

PAINTER-LEWIS, P.L.C.
817 CEDAR CREEK GRADE, SUITE #120
WINCHESTER, VIRGINIA 22601
TELEPHONE: (540) 662-5792
FACSIMILE: (540) 662-5793
EMAIL: office@painterlewis.com
CONSULTING ENGINEERS

REVISIONS

NO.	DATE

COMMONWEALTH OF VIRGINIA
TIMOTHY G. PAINTER
Lic. No. 018260
08/15/16
PROFESSIONAL ENGINEER

DRAWN BY: RJD
JOB NO.: 1511018
DATE: 08-15-2016
SCALE: AS NOTED
SHEET: A2.1

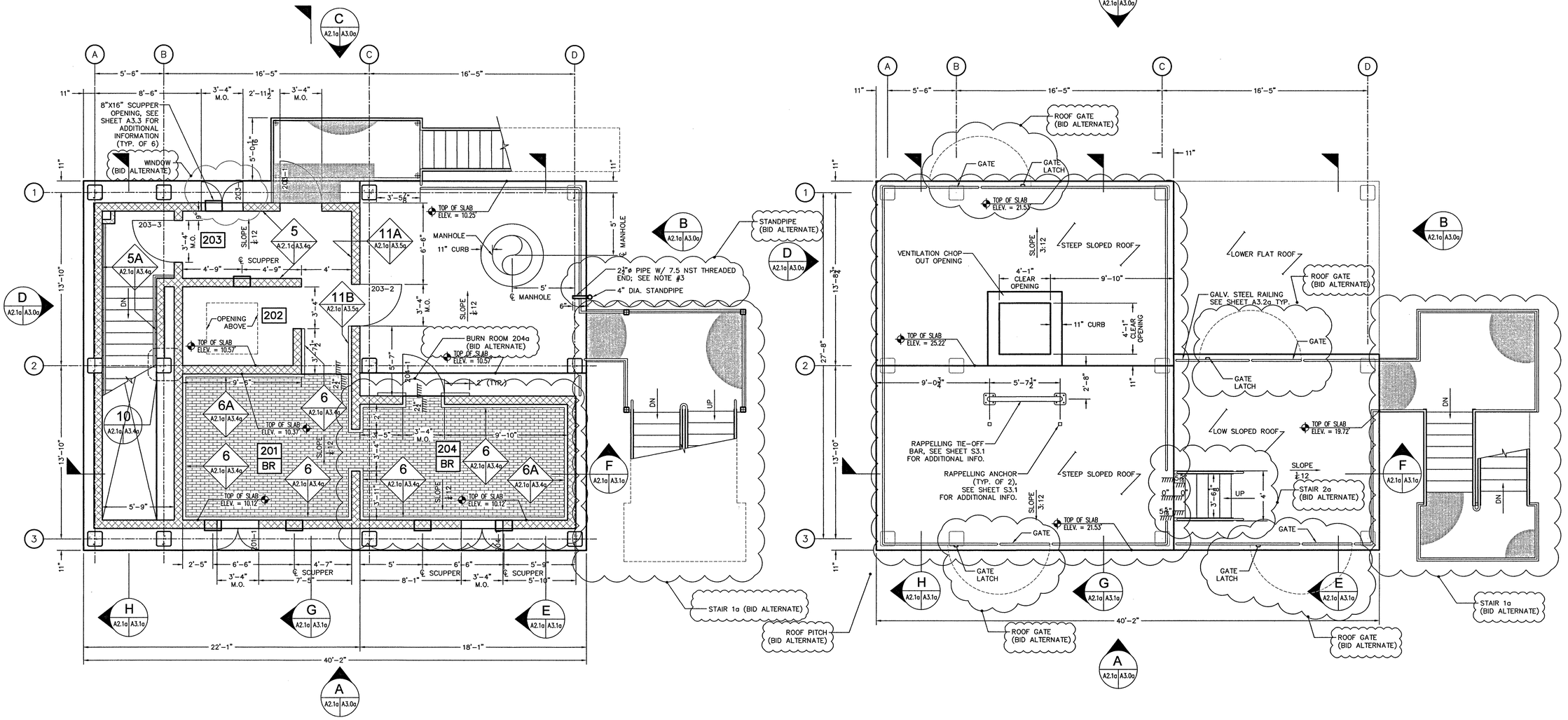

SECOND FLOOR PLAN

SCALE: 1/4"=1'-0"

NOTES:
1. ROOMS 201 & 204 ARE THE BURN ROOMS. NO BURNING IS ALLOWED IN ROOMS 202 & 203, OR ON THE STAIRS OR LANDING.
2. REFER TO SHEET A3.0 FOR INDUSTRIAL POST AND GUARDRAIL ELEVATION LOCATIONS.
3. BEFORE FABRICATION; CONTACT MR. SCOTT E. KENSINGER, DEPUTY CHIEF OF OPERATIONS AT (540) 662-2298 FOR COORDINATION OF THE PIPING AND FITTINGS TO BE USED.

BID ALTERNATE NOTE:
ALL ELEMENTS WITHIN THE CLOUDED AREAS SHALL BE INCLUDED IN THAT RESPECTIVE ALTERNATE BID ITEM.

ROOF PLAN

SCALE: 1/4"=1'-0"

VIRGINIA DEPARTMENT OF FIRE PROGRAMS

CITY OF WINCHESTER VIRGINIA

TITLE:
SECOND FLOOR AND ROOF PLANS (ALTERNATE BID)

PROJECT:
CITY OF WINCHESTER
BURN BUILDING
1716 WOODSTOCK LANE
WINCHESTER, VIRGINIA 22602

PAINTER-LEWIS, P.L.C.
817 CEDAR CREEK GRADE, SUITE #120
WINCHESTER, VIRGINIA 22601
TELEPHONE: (540) 662-5792
FACSIMILE: (540) 662-5793
EMAIL: office@painterlewis.com
CONSULTING ENGINEERS

REVISIONS

NO.	DATE

COMMONWEALTH OF VIRGINIA
TIMOTHY G. PAINTER
Lic. No. 018260
08/15/16
PROFESSIONAL ENGINEER

DRAWN BY: RJD
JOB NO.: 1511018
DATE: 08-15-2016
SCALE: AS NOTED
SHEET: A2.1a

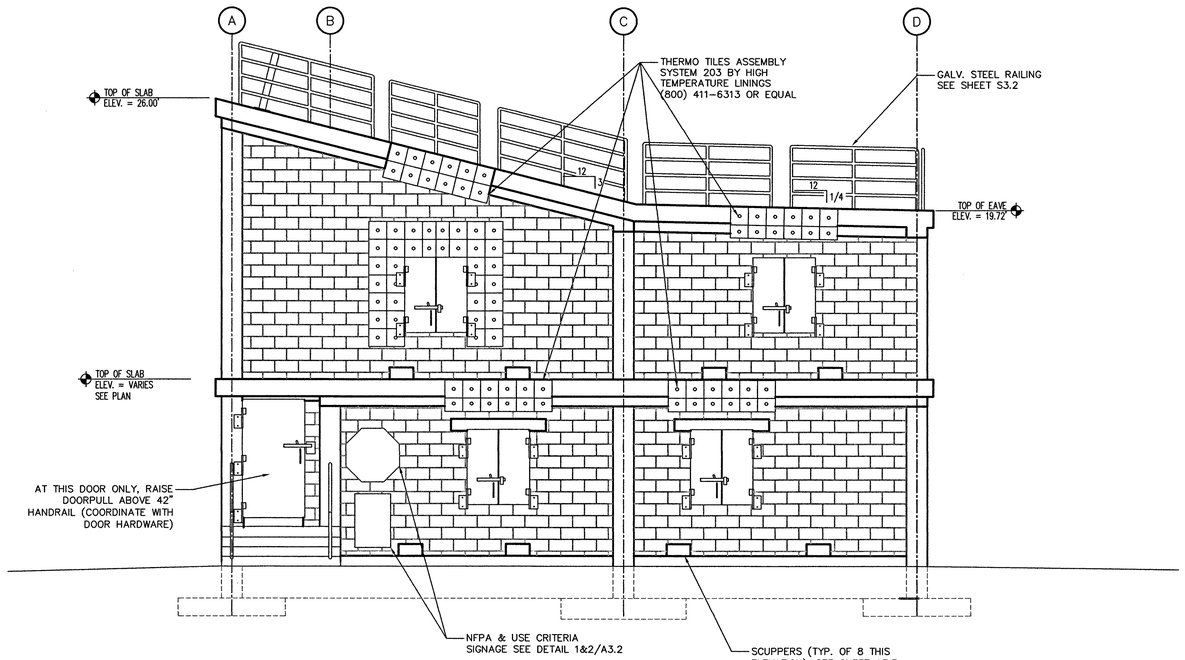

ELEVATION — FRONT — A
SCALE: 1/4"=1'-0"
A2.0,A2.1 / A3.0

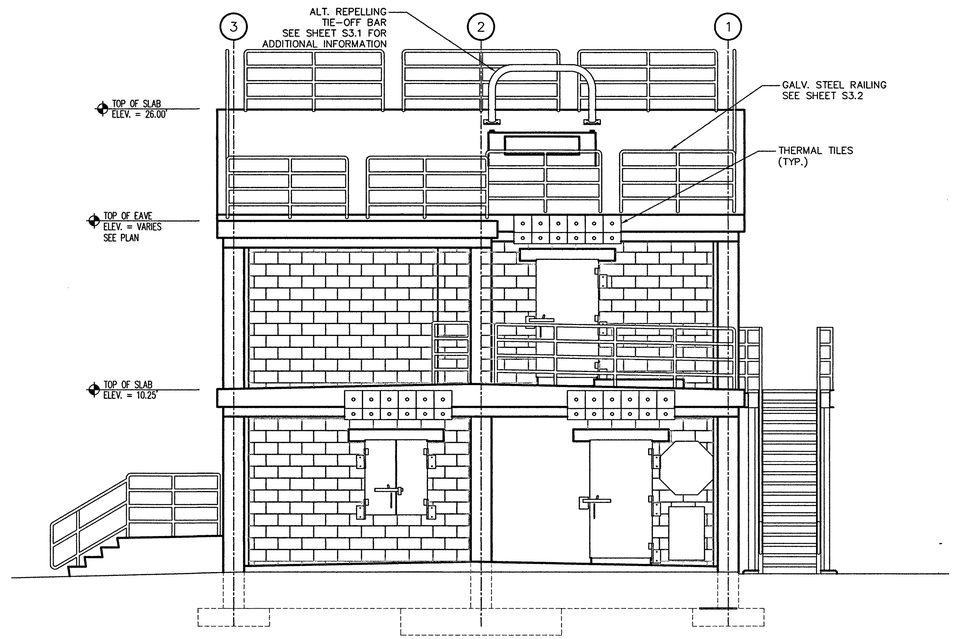

ELEVATION — RIGHT — B
SCALE: 1/4"=1'-0"
A2.0,A2.1 / A3.0

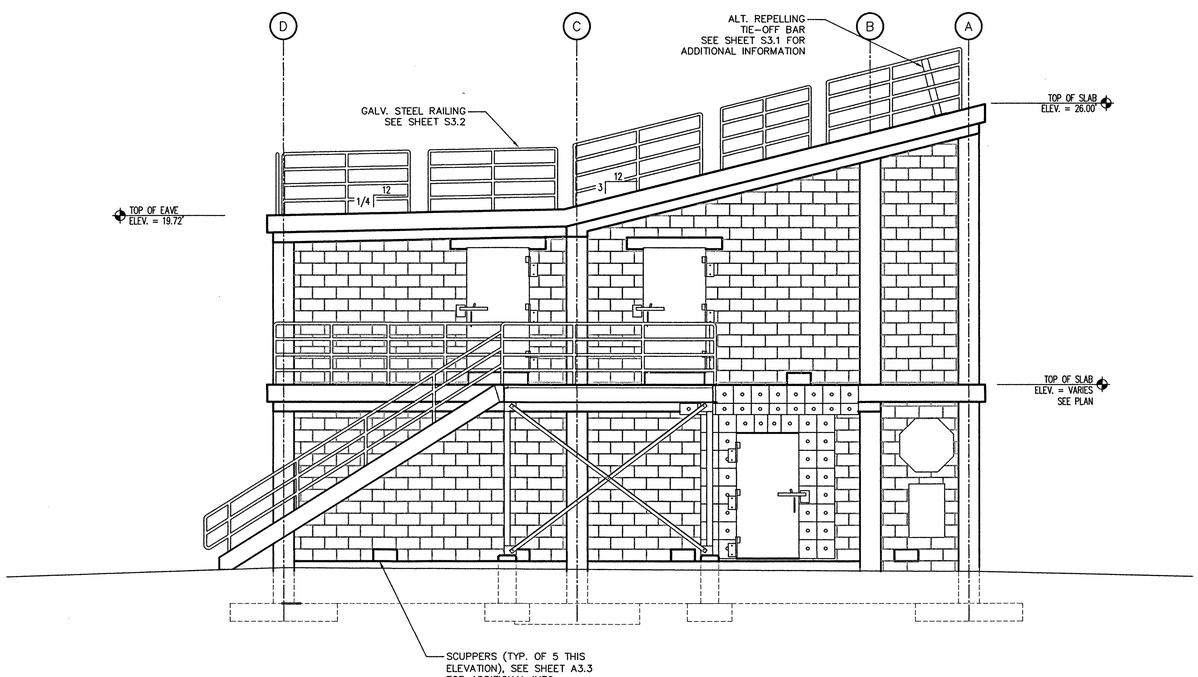

ELEVATION — REAR — C
SCALE: 1/4"=1'-0"
A2.0,A2.1 / A3.0

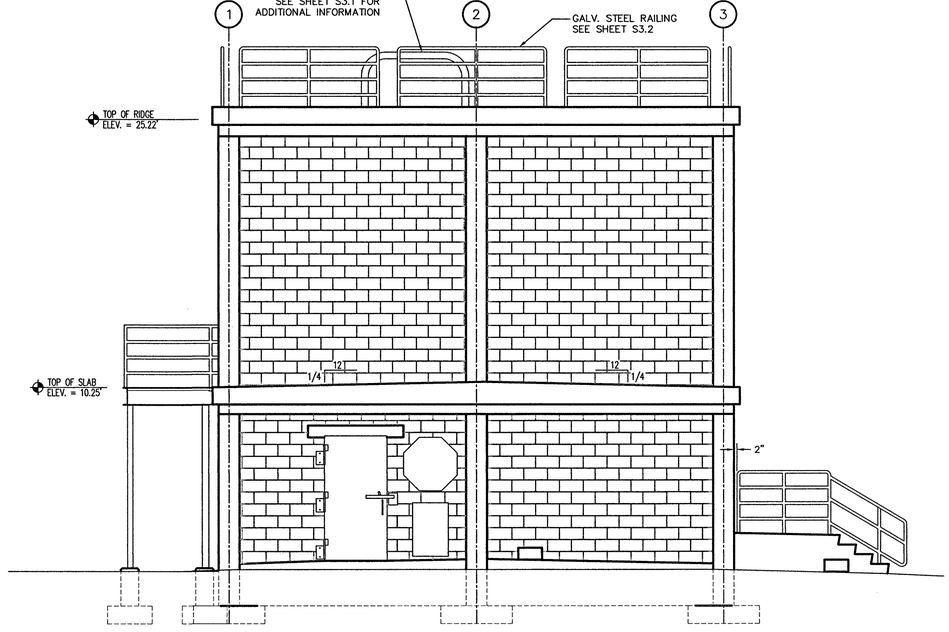

ELEVATION — LEFT — D
SCALE: 1/4"=1'-0"
A2.0,A2.1 / A3.0

VIRGINIA DEPARTMENT OF FIRE PROGRAMS

CITY OF WINCHESTER VIRGINIA

TITLE:
BUILDING ELEVATIONS (BASE BID)

PROJECT:
CITY OF WINCHESTER
BURN BUILDING
1716 WOODSTOCK LANE
WINCHESTER, VIRGINIA 22602

PAINTER-LEWIS, P.L.C.
817 CEDAR CREEK GRADE, SUITE #120
WINCHESTER, VIRGINIA 22601
TELEPHONE: (540) 662-5792
FACSIMILE: (540) 662-5793
EMAIL: office@painterlewis.com
CONSULTING ENGINEERS

REVISIONS

NO.	DATE

COMMONWEALTH OF VIRGINIA
TIMOTHY G. PAINTER
Lic. No. 018260
08/15/16
PROFESSIONAL ENGINEER

DRAWN BY: RJD	JOB NO.: 1511018
DATE: 08-15-2016	
SCALE: AS NOTED	
SHEET: A3.0	

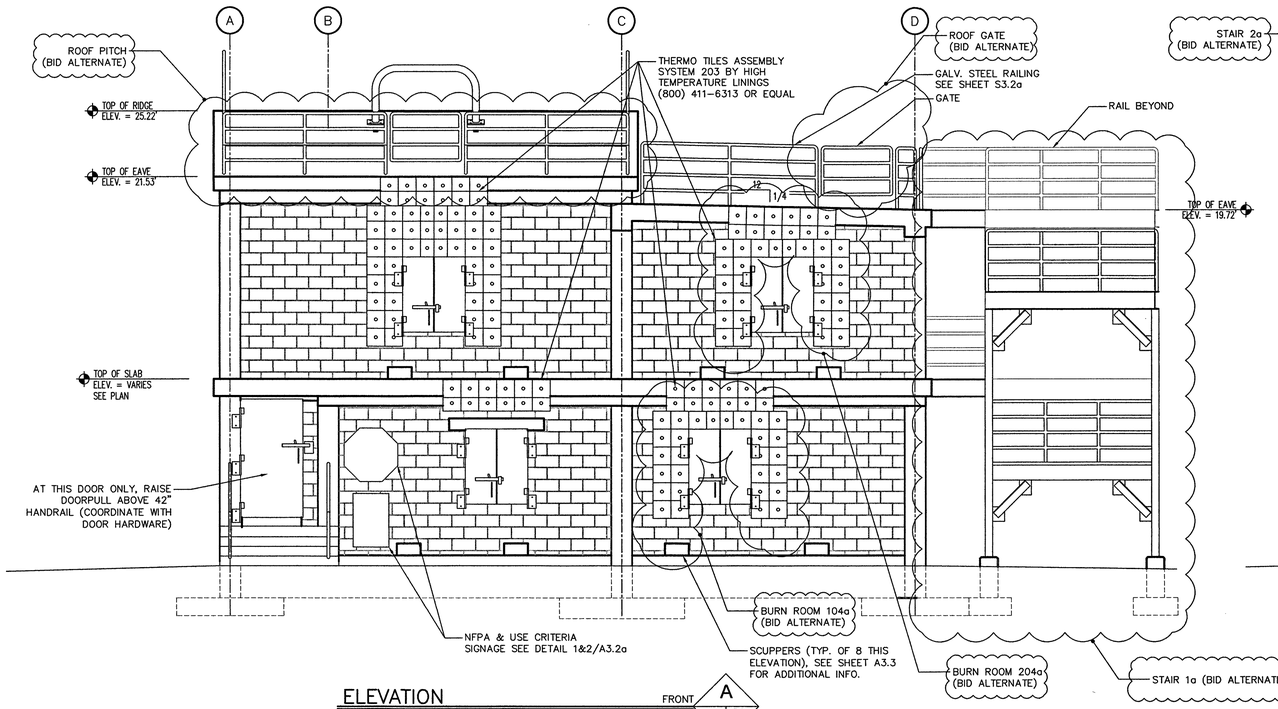

ELEVATION
SCALE: 1/4"=1'-0"

FRONT A — A3.0a — A2.0a,A2.1a

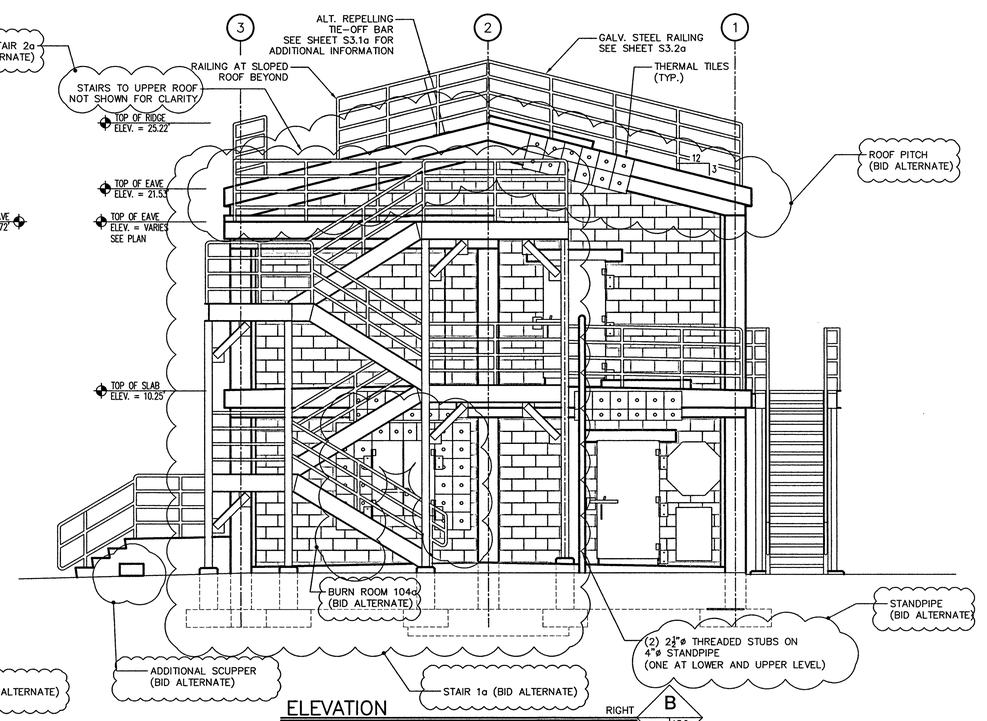

ELEVATION
SCALE: 1/4"=1'-0"

RIGHT B — A3.0a — A2.0a,A2.1a

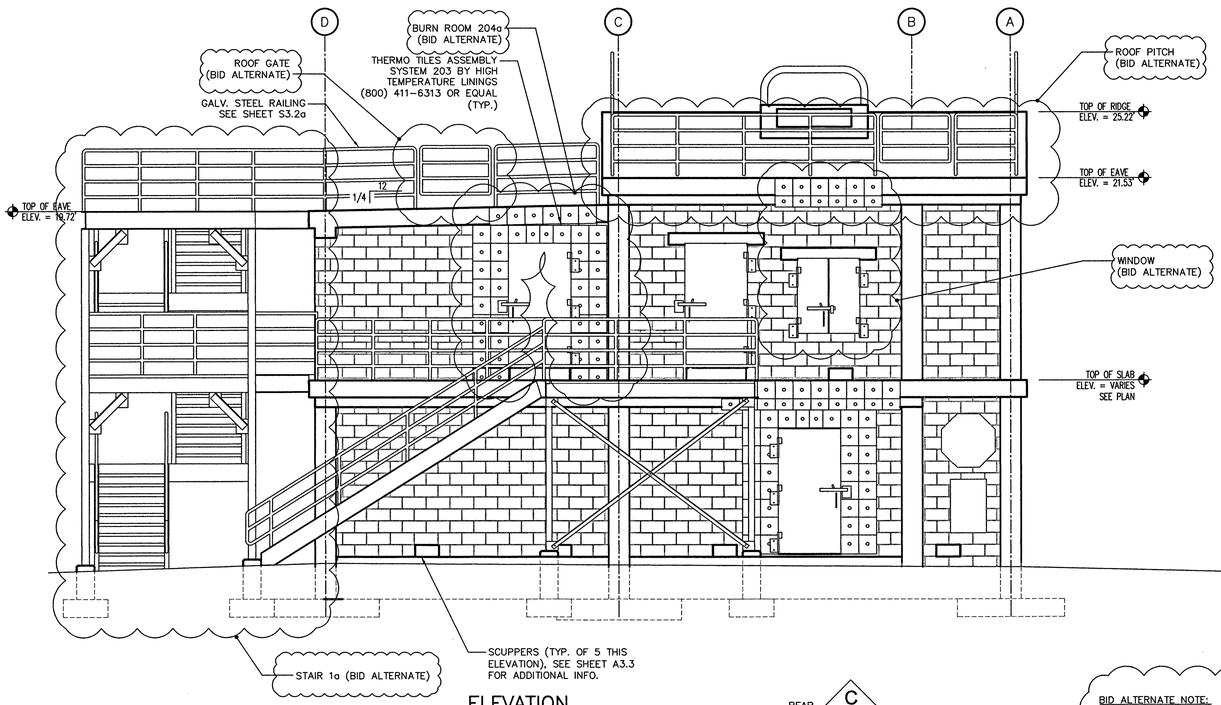

ELEVATION
SCALE: 1/4"=1'-0"

REAR C — A3.0a — A2.0a,A2.1a

BID ALTERNATE NOTE:
ALL ELEMENTS WITHIN THE CLOUDED AREAS SHALL BE INCLUDED IN THAT RESPECTIVE ALTERNATE BID ITEM.

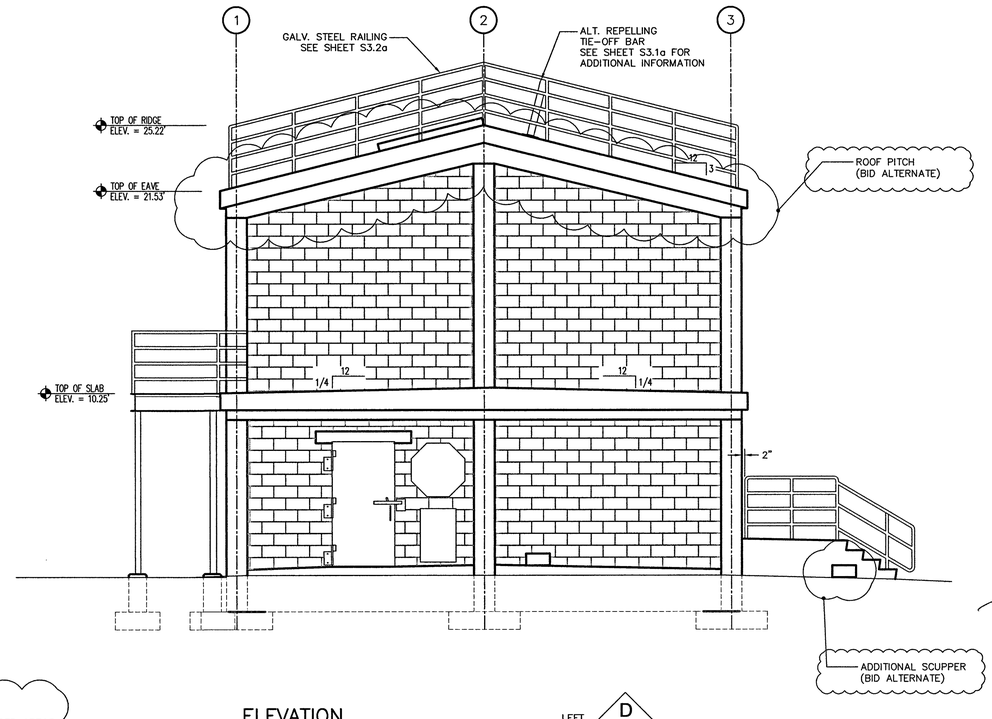

ELEVATION
SCALE: 1/4"=1'-0"

LEFT D — A3.0a — A2.0a,A2.1a

TITLE: BUILDING ELEVATIONS (ALTERNATE BID)

PROJECT:
CITY OF WINCHESTER
BURN BUILDING
1716 WOODSTOCK LANE
WINCHESTER, VIRGINIA 22602

PAINTER-LEWIS, P.L.C.
CONSULTING ENGINEERS
817 CEDAR CREEK GRADE, SUITE #120
WINCHESTER, VIRGINIA 22601
TELEPHONE: (540) 662-5792
FACSIMILE: (540) 662-5793
EMAIL: office@painterlewis.com

REVISIONS

NO.	DATE

COMMONWEALTH OF VIRGINIA
TIMOTHY G. PAINTER
Lic. No. 018260
08/15/16
PROFESSIONAL ENGINEER

DRAWN BY: RJD
JOB NO.: 1511018
DATE: 08-15-2016
SCALE: AS NOTED
SHEET: A3.0a

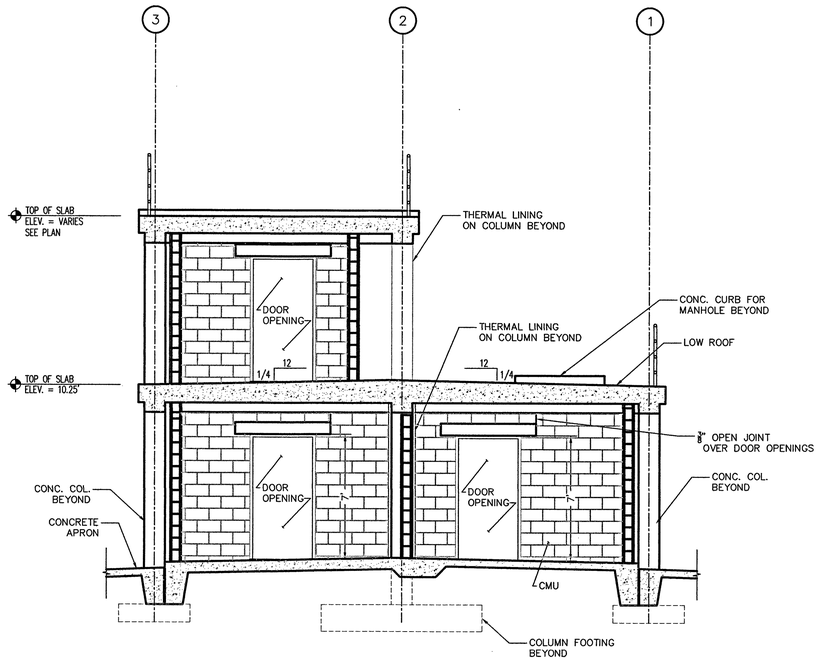

SECTION E
SCALE: 1/4"=1'-0"
A2.0,A2.1 A3.1

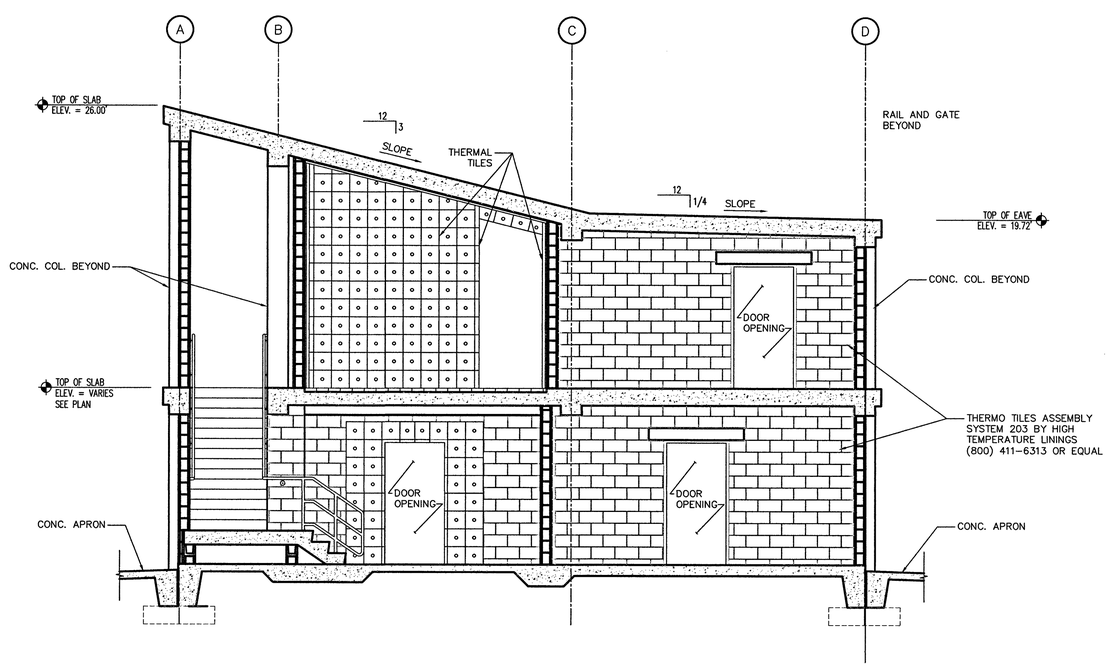

SECTION F
SCALE: 1/4"=1'-0"
A2.0,A2.1 A3.1

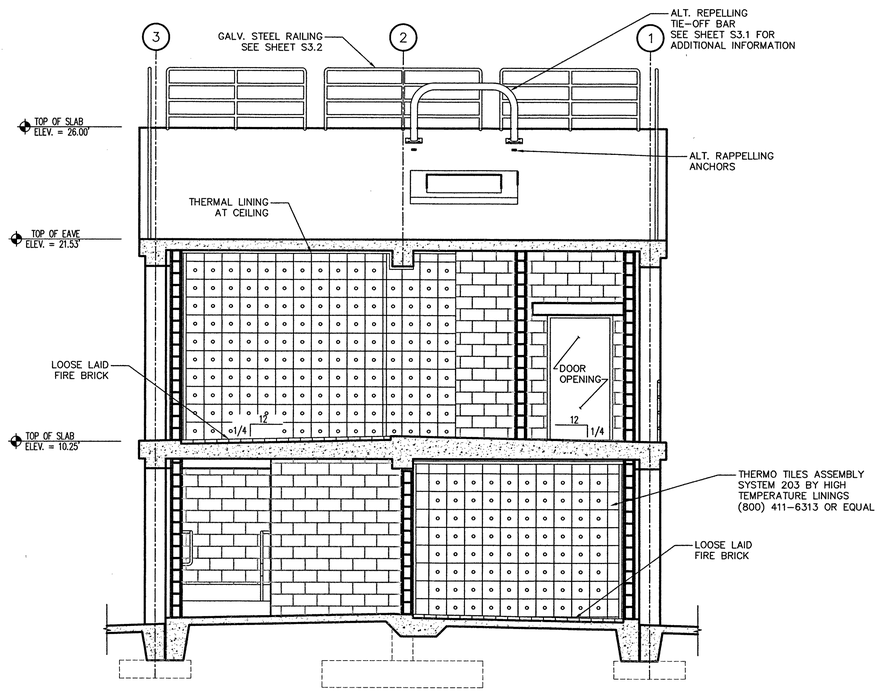

SECTION G
SCALE: 1/4"=1'-0"
A2.0,A2.1 A3.1

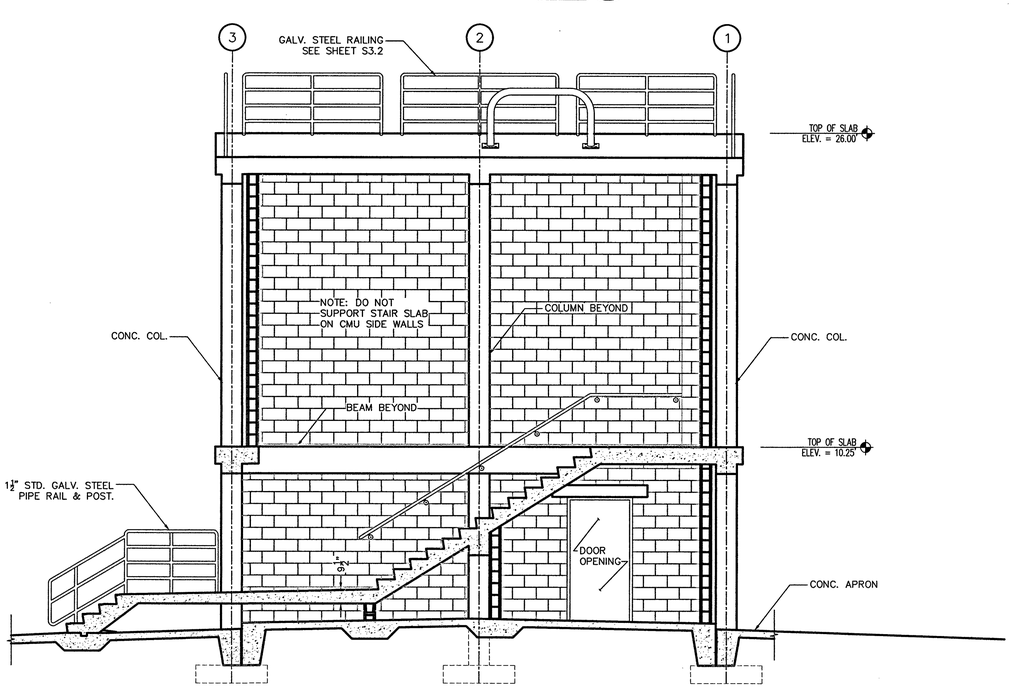

SECTION H
SCALE: 1/4"=1'-0"
A2.0,A2.1 A3.1

TITLE: BUILDING SECTIONS (BASE BID)

PROJECT:
CITY OF WINCHESTER
BURN BUILDING
1716 WOODSTOCK LANE
WINCHESTER, VIRGINIA 22602

PAINTER-LEWIS, P.L.C.
817 CEDAR CREEK GRADE, SUITE #120
WINCHESTER, VIRGINIA 22601
TELEPHONE: (540) 662-5792
FACSIMILE: (540) 662-5793
EMAIL: office@painterlewis.com
CONSULTING ENGINEERS

REVISIONS

NO.	DATE

COMMONWEALTH OF VIRGINIA
TIMOTHY G. PAINTER
Lic. No. 018260
09/15/16
PROFESSIONAL ENGINEER

DRAWN BY: RJD
JOB NO.: 1511018
DATE: 08-15-2016
SCALE: AS NOTED
SHEET: A3.1

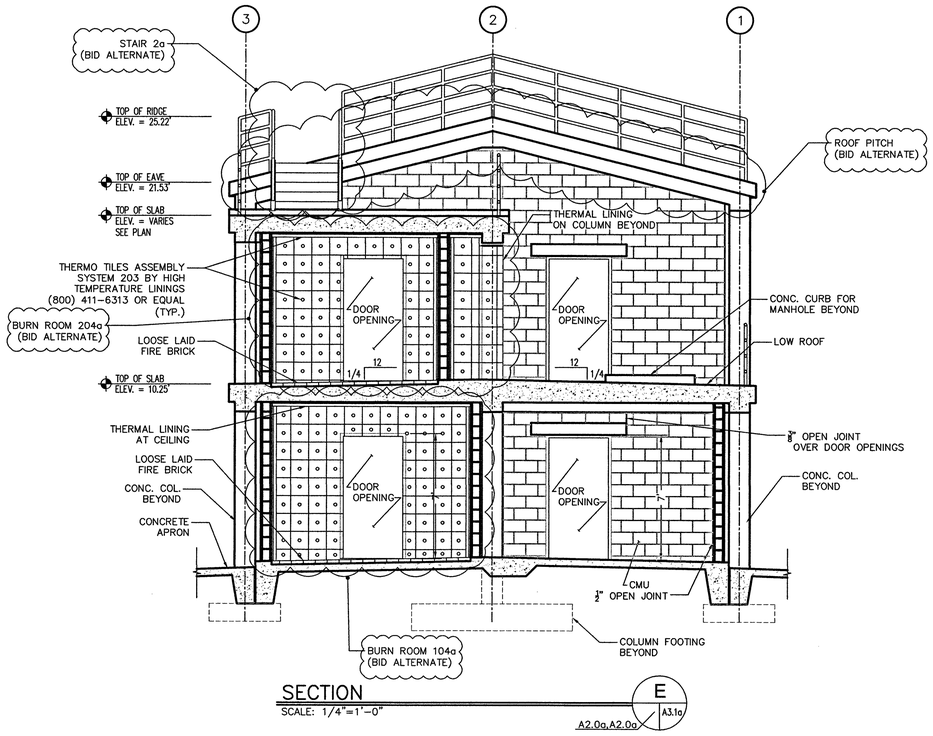

SECTION
SCALE: 1/4"=1'-0"

E
A3.1a
A2.0a,A2.0a

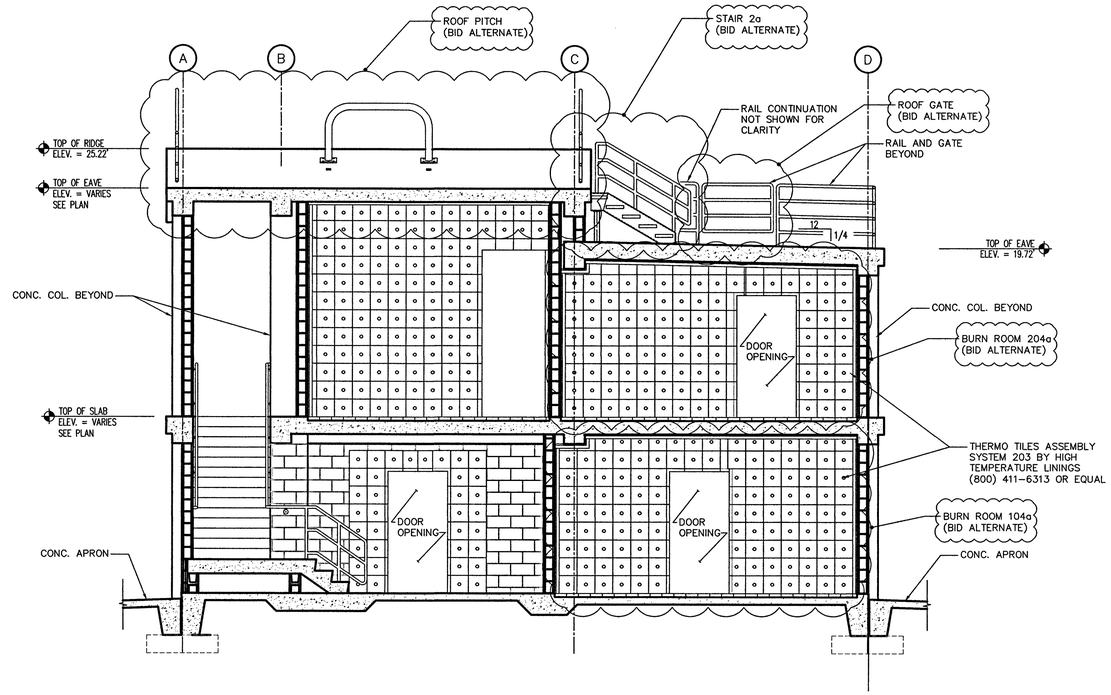

SECTION
SCALE: 1/4"=1'-0"

F
A3.1a
A2.0a,A2.0a

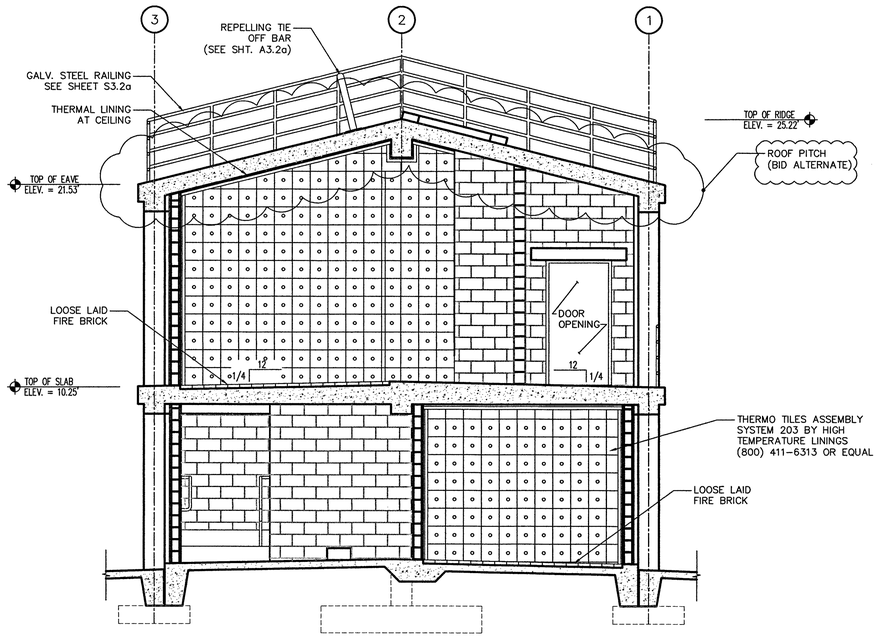

SECTION
SCALE: 1/4"=1'-0"

G
A3.1a
A2.0a,A2.0a

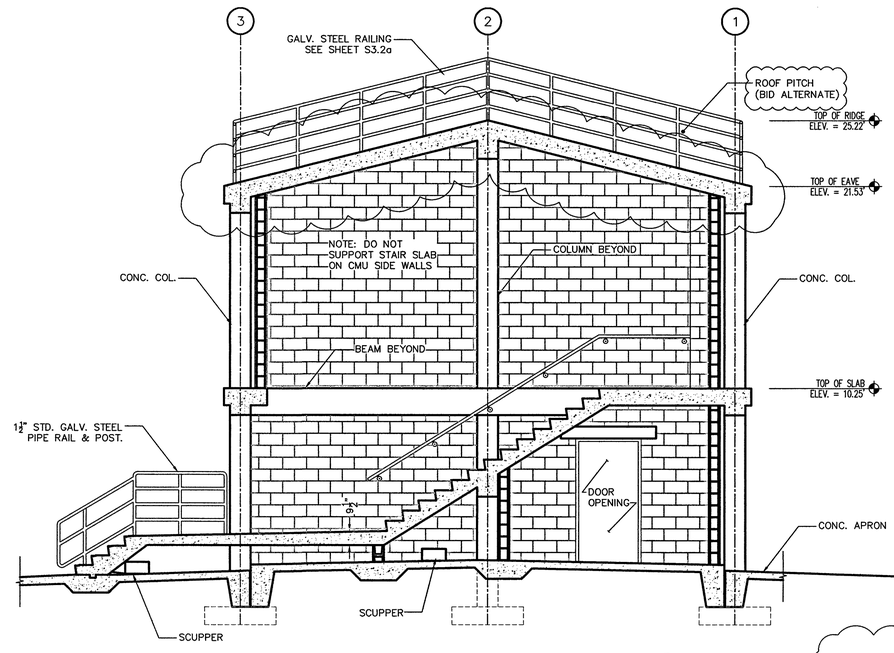

SECTION
SCALE: 1/4"=1'-0"

H
A3.1a
A2.0a,A2.0a

BID ALTERNATE NOTE:
ALL ELEMENTS WITHIN THE CLOUDED AREAS
SHALL BE INCLUDED IN THAT RESPECTIVE
ALTERNATE BID ITEM.

VIRGINIA DEPARTMENT OF FIRE PROGRAMS

CITY OF WINCHESTER
VIRGINIA

TITLE:
BUILDING SECTIONS
(ALTERNATE BID)

PROJECT:
CITY OF WINCHESTER
BURN BUILDING
1716 WOODSTOCK LANE
WINCHESTER, VIRGINIA 22602

PAINTER-LEWIS, P.L.C.
817 CEDAR CREEK GRADE, SUITE #120
WINCHESTER, VIRGINIA 22601
TELEPHONE: (540) 662-5792
FACSIMILE: (540) 662-5793
EMAIL: office@painterlewis.com
CONSULTING
ENGINEERS

REVISIONS

NO.	DATE

COMMONWEALTH OF VIRGINIA
TIMOTHY G. PAINTER
Lic. No. 018260
08/15/16
PROFESSIONAL ENGINEER

DRAWN BY: RJD
JOB NO.: 1511018
DATE: 08-15-2016
SCALE: AS NOTED
SHEET: A3.1a

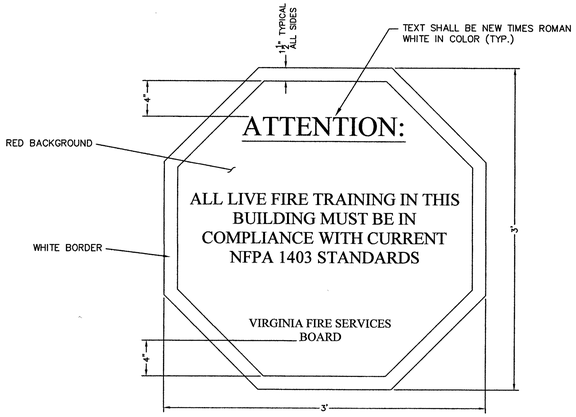

DETAIL — NFPA 1403 SIGNAGE — 1 (A3.0 A3.2)
SCALE: 1 1/2"=1'-0"

36"X36" OCTAGON LIVE TRAINING ATTENTION SIGNAGE AS PROVIDED BY SRG, INC. OR APPROVED EQUAL MEETING NFPA 1403 STANDARD

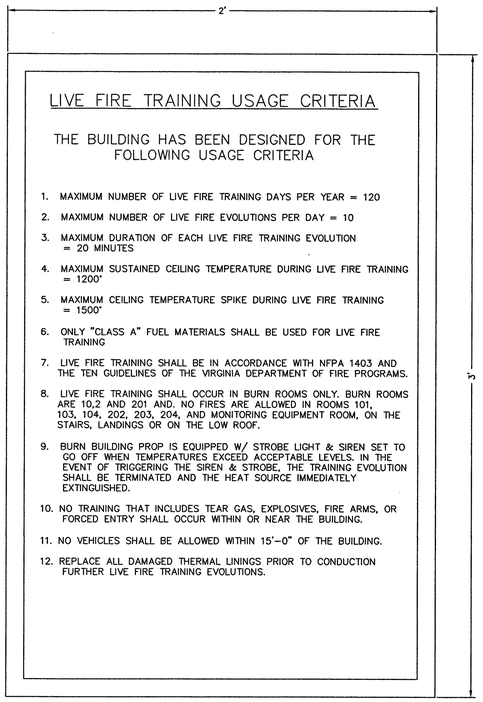

DETAIL — USAGE CRITERIA SIGNAGE — 2 (A3.0 A3.2)
SCALE: 3=1'-0"

SIGNAGE SC-P1A CLASS A FUEL AS PROVIDED BY SRG, INC. OR APPROVED EQUAL MEETING NFPA 1403 STANDARDS

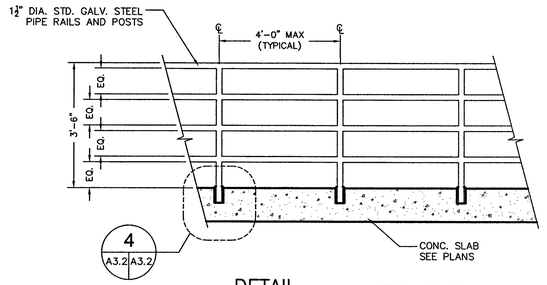

DETAIL — TYPICAL GUARDRAIL
SCALE: 1/2"=1'-0"

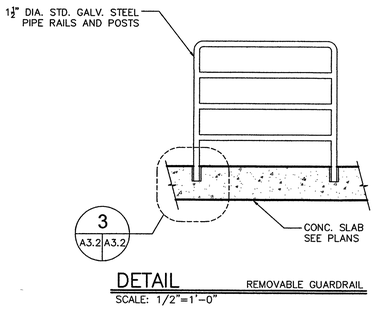

DETAIL — REMOVABLE GUARDRAIL
SCALE: 1/2"=1'-0"

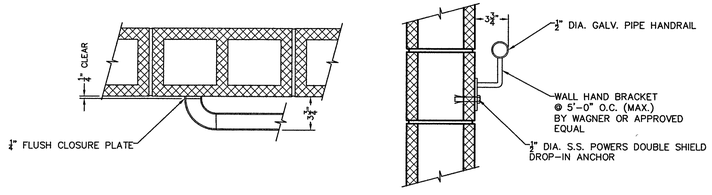

DETAIL — INTERIOR HANDRAIL
SCALE: 1 1/2"=1'-0"

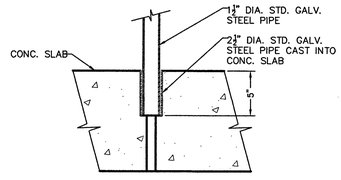

DETAIL — GUARDRAIL — 3 (A3.2 A3.2)
SCALE: 1 1/2"=1'-0"

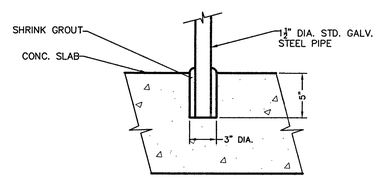

DETAIL — GUARDRAIL — 4 (A3.2 A3.2)
SCALE: 1 1/2"=1'-0"

VIRGINIA DEPARTMENT OF FIRE PROGRAMS

CITY OF WINCHESTER VIRGINIA

TITLE:
SIGNAGE & RAILING DETAILS (BASE BID)

PROJECT:
CITY OF WINCHESTER
BURN BUILDING
1716 WOODSTOCK LANE
WINCHESTER, VIRGINIA 22602

PAINTER-LEWIS, P.L.C.
817 CEDAR CREEK GRADE, SUITE #120
WINCHESTER, VIRGINIA 22601
TELEPHONE: (540) 662-5792
FACSIMILE: (540) 662-5793
EMAIL: office@painterlewis.com
CONSULTING ENGINEERS

REVISIONS

NO.	DATE

COMMONWEALTH OF VIRGINIA
TIMOTHY G. PAINTER
Lic. No. 018260
08/15/16
PROFESSIONAL ENGINEER

DRAWN BY: RJD
JOB NO.: 1511018
DATE: 08-15-2016
SCALE: AS NOTED
SHEET: A3.2

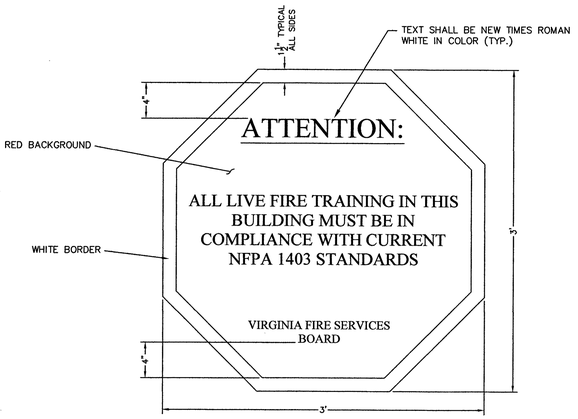

DETAIL — NFPA 1403 SIGNAGE — 1 (A3.0a | A3.2a)
SCALE: 1 1/2"=1'-0"

36"X36" OCTAGON LIVE TRAINING ATTENTION SIGNAGE AS PROVIDED BY SRG, INC. OR APPROVED EQUAL MEETING NFPA 1403 STANDARD

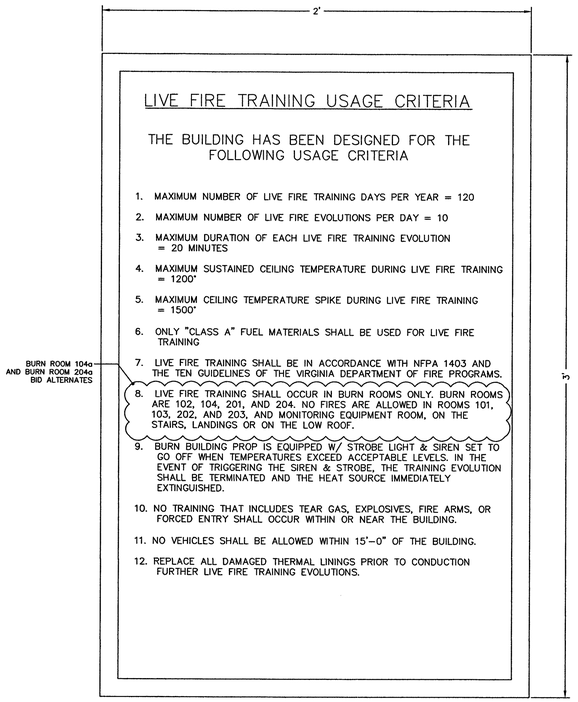

DETAIL — USAGE CRITERIA SIGNAGE — 2 (A3.0a | A3.2a)
SCALE: 3=1'-0"

SIGNAGE SG-P1A CLASS A FUEL AS PROVIDED BY SRG, INC. OR APPROVED EQUAL MEETING NFPA 1403 STANDARDS

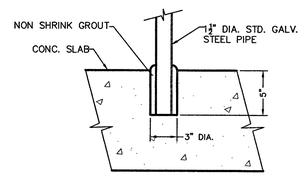

DETAIL — GUARDRAIL — 3 (A3.2a | A3.2a)
SCALE: 1 1/2"=1'-0"

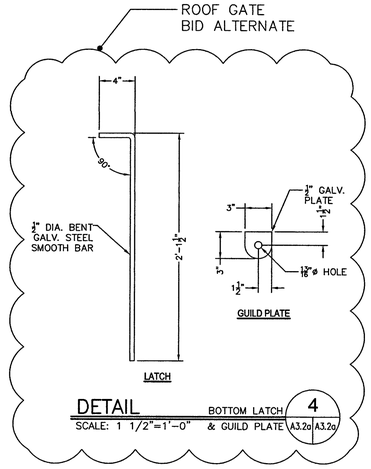

DETAIL — BOTTOM LATCH & GUILD PLATE — 4 (A3.2a | A3.2a)
SCALE: 1 1/2"=1'-0"

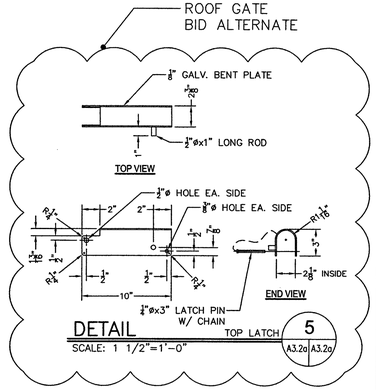

DETAIL — TOP LATCH — 5 (A3.2a | A3.2a)
SCALE: 1 1/2"=1'-0"

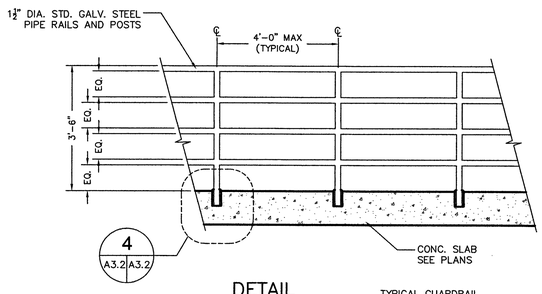

DETAIL — TYPICAL GUARDRAIL
SCALE: 1/2"=1'-0"

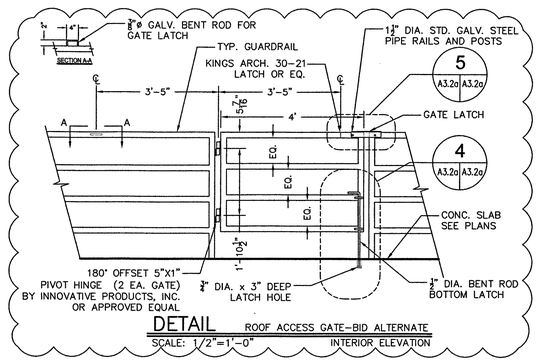

DETAIL — ROOF ACCESS GATE-BID ALTERNATE INTERIOR ELEVATION
SCALE: 1/2"=1'-0"

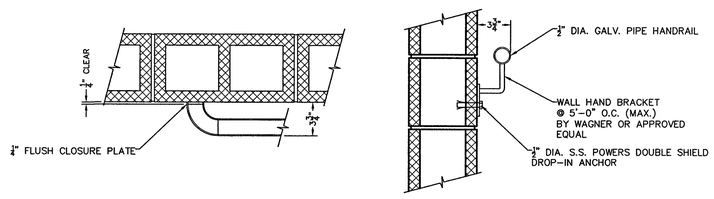

DETAIL — INTERIOR HANDRAIL — 6 (A3.2a | A3.2a)
SCALE: 1 1/2"=1'-0"

BID ALTERNATE NOTE:
ALL ELEMENTS WITHIN THE CLOUDED AREAS SHALL BE INCLUDED IN THAT RESPECTIVE ALTERNATE BID ITEM.

VIRGINIA DEPARTMENT OF FIRE PROGRAMS

CITY OF WINCHESTER & VIRGINIA

TITLE: SIGNAGE & RAILING DETAILS (ALTERNATE BID)

PROJECT:
CITY OF WINCHESTER
BURN BUILDING
1716 WOODSTOCK LANE
WINCHESTER, VIRGINIA 22602

PAINTER-LEWIS, P.L.C.
817 CEDAR CREEK GRADE, SUITE #120
WINCHESTER, VIRGINIA 22601
TELEPHONE: (540) 662-5792
FACSIMILE: (540) 662-5793
EMAIL: office@painterlewis.com
CONSULTING ENGINEERS

REVISIONS

NO.	DATE

COMMONWEALTH OF VIRGINIA
TIMOTHY S. PAINTER
Lic. No. 018260
08/15/16
PROFESSIONAL ENGINEER

DRAWN BY: RJD
JOB NO.: 1511018
DATE: 08-15-2016
SCALE: AS NOTED
SHEET: A3.2a

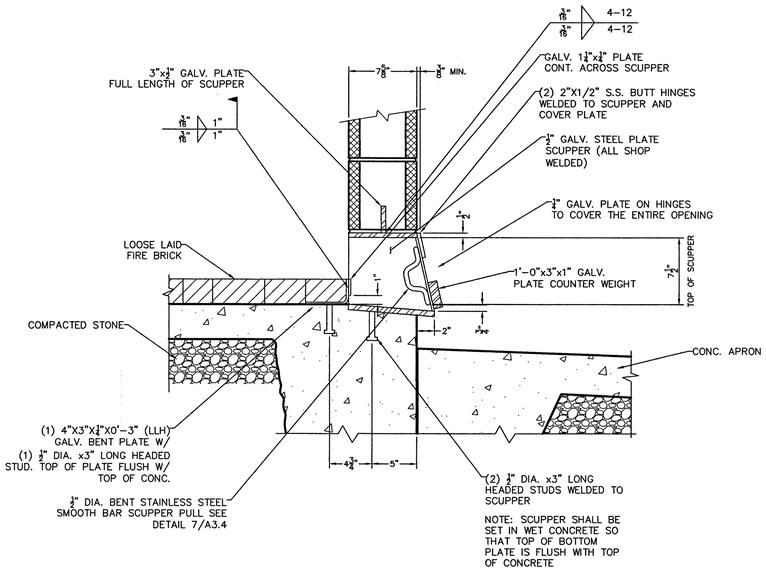

DETAIL — SCUPPER W/ FIRE BRICK
SCALE: 1 1/2"=1'-0" — FIRST FLOOR

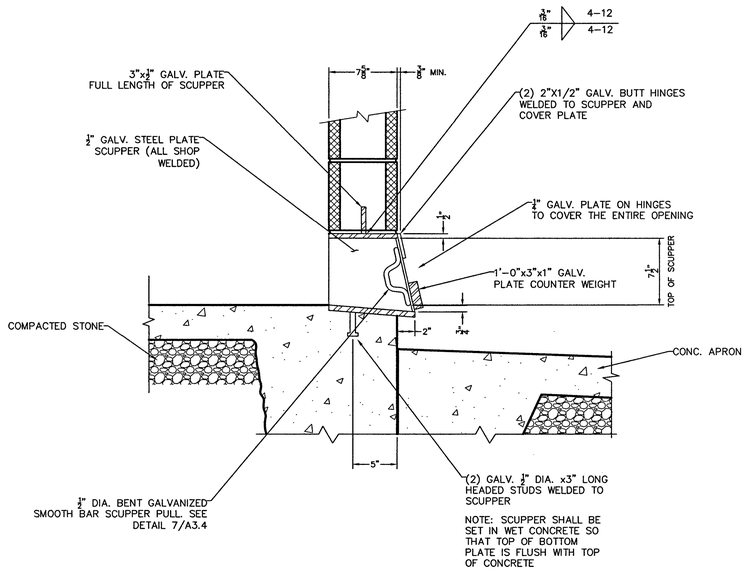

DETAIL — SCUPPER W/O FIRE BRICK
SCALE: 1 1/2"=1'-0" — FIRST FLOOR

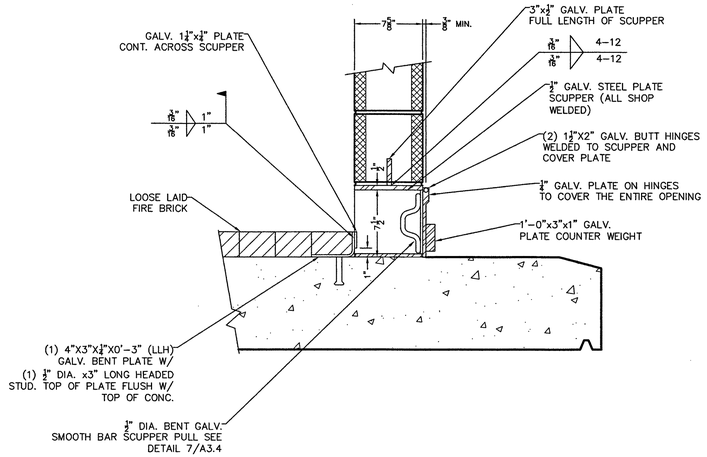

DETAIL — SCUPPER W/ FIRE BRICK
SCALE: 1 1/2"=1'-0" — SECOND FLOOR

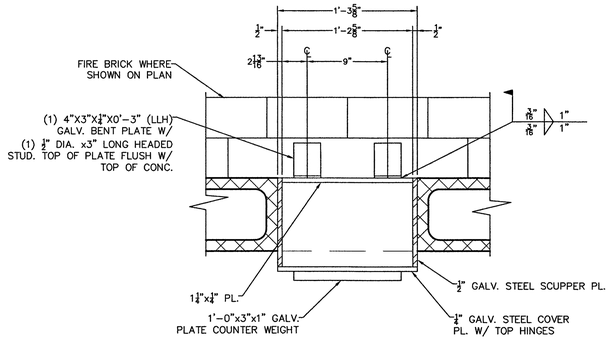

PLAN — SCUPPER W/ FIRE BRICK
SCALE: 1 1/2"=1'-0"

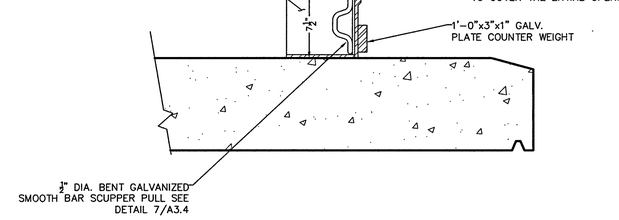

DETAIL — SCUPPER W/O FIRE BRICK
SCALE: 1 1/2"=1'-0" — SECOND FLOOR

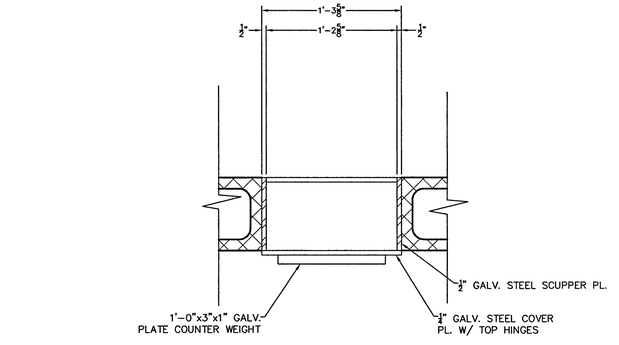

PLAN — SCUPPER W/O FIRE BRICK
SCALE: 1 1/2"=1'-0"

TITLE: SCUPPER SECTIONS AND DETAILS

PROJECT:
CITY OF WINCHESTER
BURN BUILDING
1716 WOODSTOCK LANE
WINCHESTER, VIRGINIA 22602

PAINTER-LEWIS, P.L.C.
817 CEDAR CREEK GRADE, SUITE #120
WINCHESTER, VIRGINIA 22601
TELEPHONE: (540) 662-5792
FACSIMILE: (540) 662-5793
EMAIL: office@painterlewis.com
CONSULTING ENGINEERS

REVISIONS

NO.	DATE

COMMONWEALTH OF VIRGINIA
TIMOTHY G. PAINTER
Lic. No. 018260
08/15/16
PROFESSIONAL ENGINEER

DRAWN BY: RJD
JOB NO.: 1511018
DATE: 08-15-2016
SCALE: AS NOTED
SHEET: A3.3

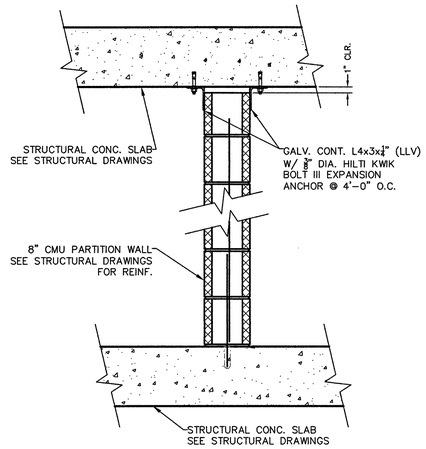

DETAIL 8" CMU PARTITION WALL 5
SCALE: 1"=1'-0" A2.0,A2.1 A3.4

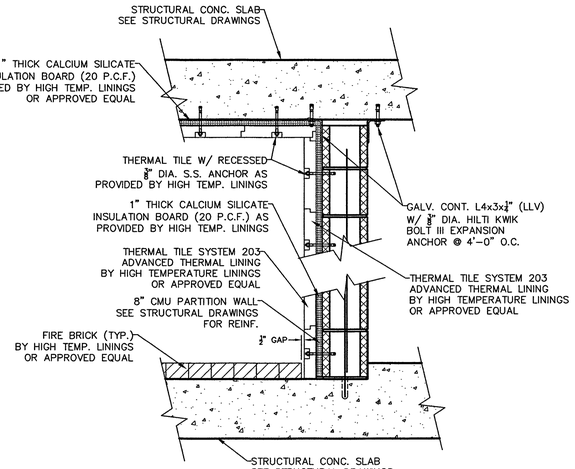

DETAIL 8" CMU PARTITION WALL W/ THERMAL LINER 6
SCALE: 1"=1'-0" A2.0,A2.1 A3.4

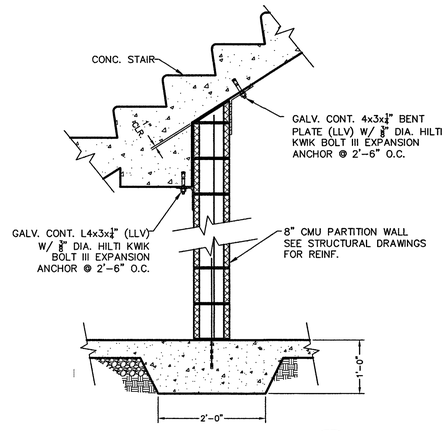

DETAIL INTERIOR PARTITION DETAIL 7
SCALE: 3/4"=1'-0" A2.0 A3.4

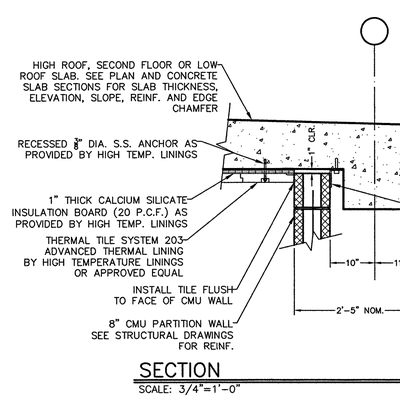

DETAIL 8
SCALE: 1 1/2"=1'-0" A2.0 A3.4

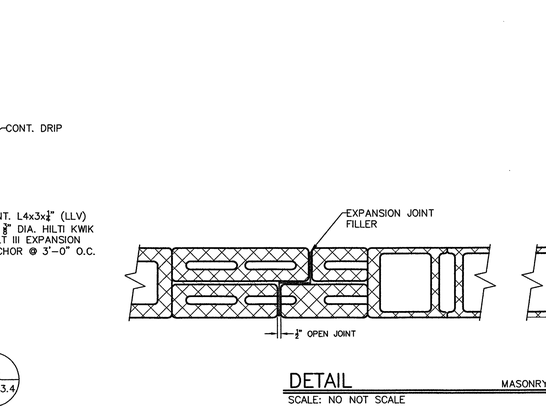

DETAIL 9
SCALE: 1 1/2"=1'-0" A2.0 A3.4

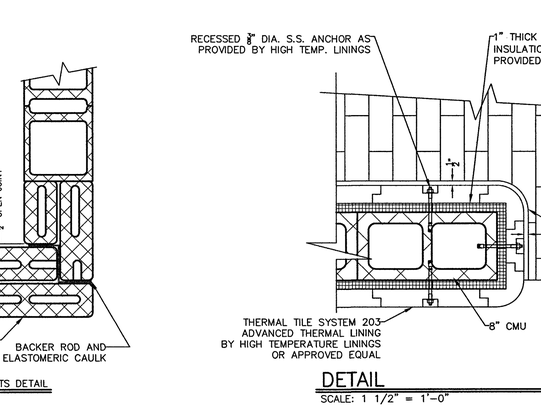

DETAIL 10
SCALE: 1 1/2"=1'-0" A2.1 A3.4

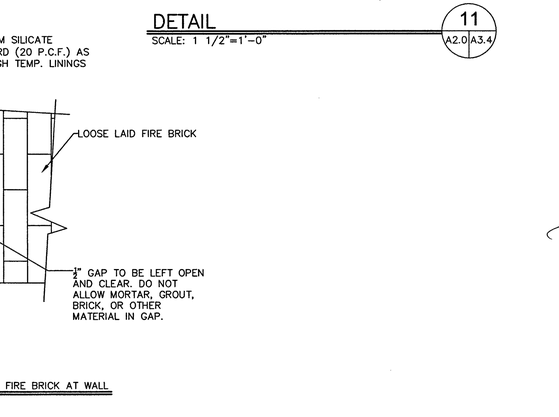

DETAIL 11
SCALE: 1 1/2"=1'-0" A2.0 A3.4

SECTION A
SCALE: 3/4"=1'-0" A2.0 A3.4

DETAIL MASONRY OPEN JOINTS DETAIL
SCALE: NO NOT SCALE

DETAIL FIRE BRICK AT WALL
SCALE: 1 1/2" = 1'-0"

VIRGINIA DEPARTMENT OF FIRE PROGRAMS

CITY OF WINCHESTER VIRGINIA

TITLE:
WALL SECTIONS
AND DETAILS
(BASE BID)

PROJECT:
CITY OF WINCHESTER
BURN BUILDING
1716 WOODSTOCK LANE
WINCHESTER, VIRGINIA 22602

PAINTER-LEWIS, P.L.C.
817 CEDAR CREEK GRADE, SUITE #120
WINCHESTER, VIRGINIA 22601
TELEPHONE: (540) 662-5792
FACSIMILE: (540) 662-5793
EMAIL: office@painterlewis.com
CONSULTING ENGINEERS

REVISIONS

NO.	DATE

COMMONWEALTH OF VIRGINIA
TIMOTHY G. PAINTER
Lic. No. 018260
08/15/16
PROFESSIONAL ENGINEER

DRAWN BY: RJD
JOB NO.: 1511018
DATE: 08-15-2016
SCALE: AS NOTED
SHEET: A3.4

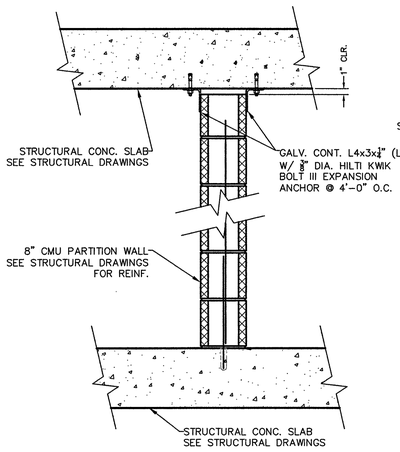

DETAIL 8" CMU PARTITION WALL 5 A3.4a
SCALE: 1"=1'-0" A2.0a,A2.1a

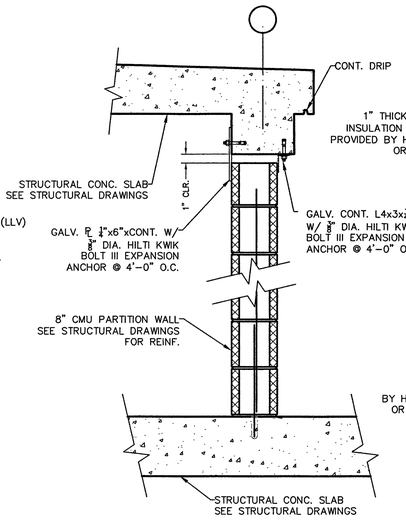

DETAIL 8" CMU PARTITION WALL 5A A3.4a
SCALE: 1"=1'-0" A2.0a,A2.1a

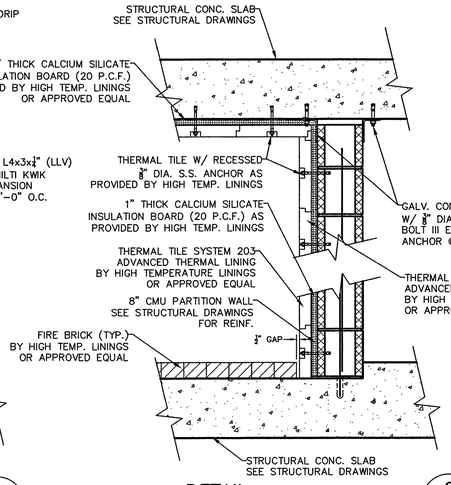

DETAIL 8" CMU PARTITION WALL 6 A3.4a
SCALE: 1"=1'-0" W/ THERMAL LINER A2.0a,A2.1a

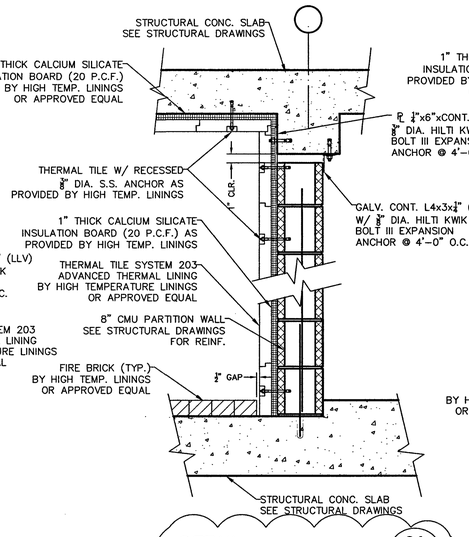

DETAIL 8" CMU PARTITION WALL 6A A3.4a
SCALE: 1"=1'-0" A2.0a,A2.1a

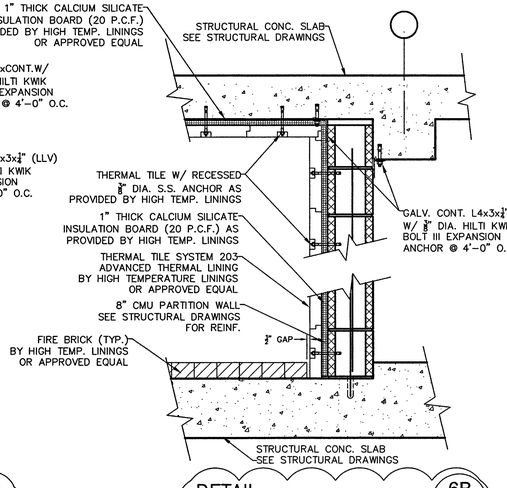

DETAIL 8" CMU PARTITION WALL 6B A2.0a A3.4a
SCALE: 1"=1'-0" W/ THERMAL LINER

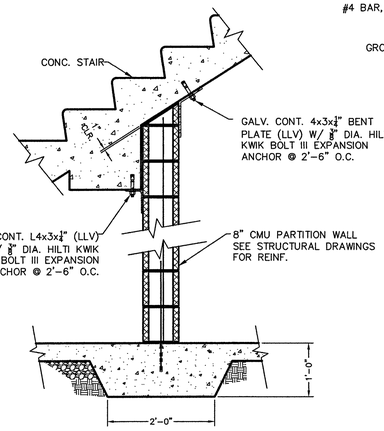

DETAIL INTERIOR PARTITION DETAIL 7 A2.0a A3.4a
SCALE: 3/4"=1'-0"

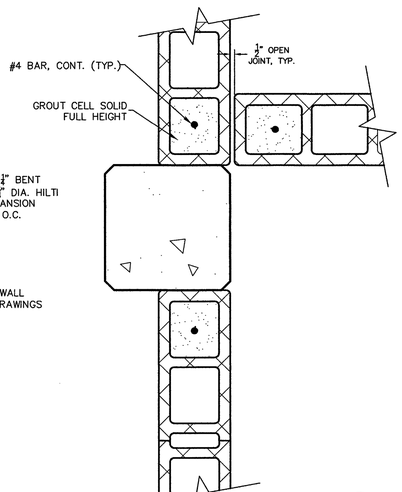

DETAIL 8 A2.0a A3.4a
SCALE: 1 1/2"=1'-0"

NOT USED

DETAIL 9 A2.0a A3.4a
SCALE: 1 1/2"=1'-0"

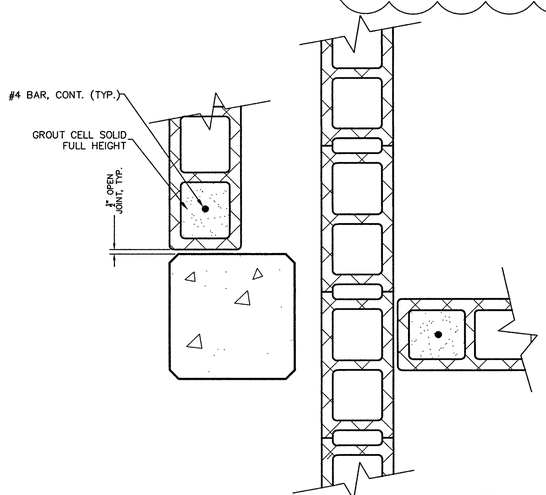

DETAIL 10 A2.1a A3.4a
SCALE: 1 1/2"=1'-0"

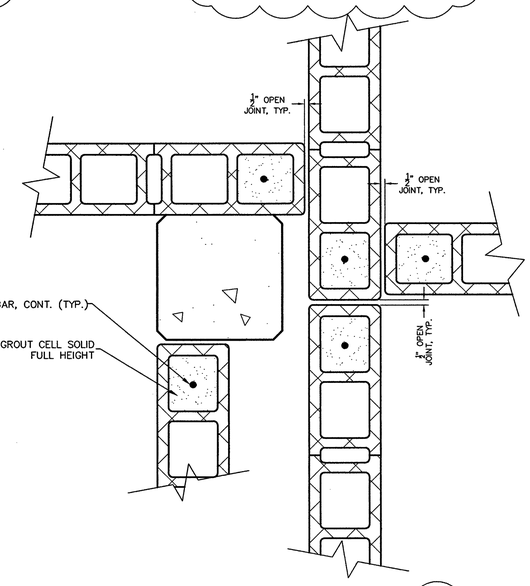

DETAIL 11 A2.0a A3.4a
SCALE: 1 1/2"=1'-0"

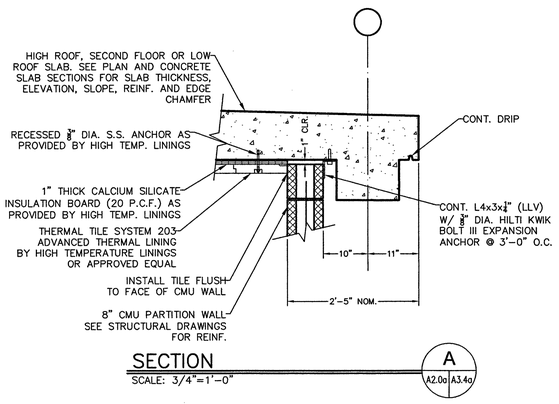

SECTION A A2.0a A3.4a
SCALE: 3/4"=1'-0"

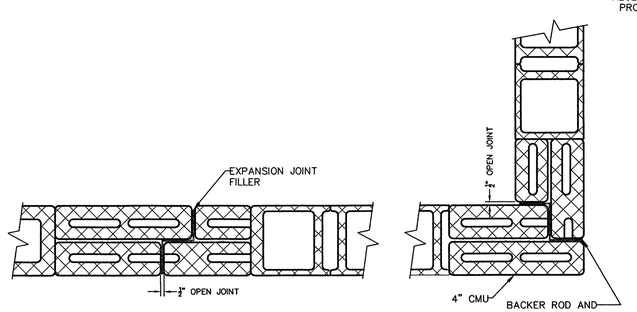

DETAIL MASONRY OPEN JOINTS DETAIL
SCALE: NO NOT SCALE

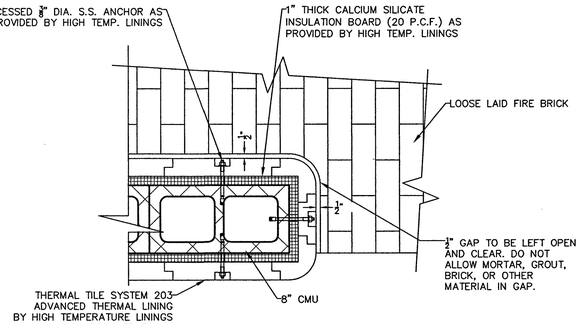

DETAIL FIRE BRICK AT WALL
SCALE: 1 1/2" = 1'-0"

BID ALTERNATE NOTE:
ALL ELEMENTS WITHIN THE CLOUDED AREAS SHALL BE INCLUDED IN THAT RESPECTIVE ALTERNATE BID ITEM.

VIRGINIA DEPARTMENT OF FIRE PROGRAMS

CITY OF WINCHESTER VIRGINIA

TITLE: WALL SECTIONS AND DETAILS (ALTERNATE BID)

PROJECT: CITY OF WINCHESTER
BURN BUILDING
1716 WOODSTOCK LANE
WINCHESTER, VIRGINIA 22602

PAINTER-LEWIS, P.L.C.
817 CEDAR CREEK GRADE, SUITE #120
WINCHESTER, VIRGINIA 22601
TELEPHONE: (540) 662-5792
FACSIMILE: (540) 662-5793
EMAIL: office@painterlewis.com
CONSULTING ENGINEERS

REVISIONS

NO.	DATE

COMMONWEALTH OF VIRGINIA
TIMOTHY G. PAINTER
Lic. No. 018260
08/15/16
PROFESSIONAL ENGINEER

DRAWN BY: RJD
JOB NO.: 1511018
DATE: 08-15-2016
SCALE: AS NOTED
SHEET: A3.4a

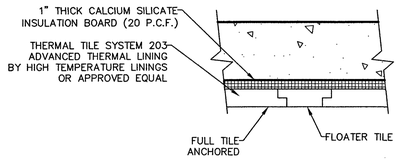

DETAIL FLOATER
SCALE: 1 1/2" = 1'-0"

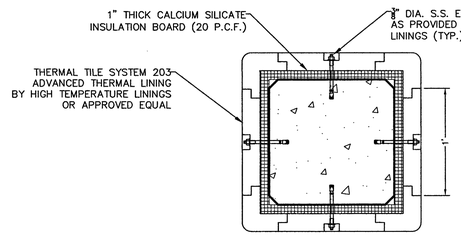

DETAIL COLUMN PROTECTION
SCALE: 1 1/2" = 1'-0"

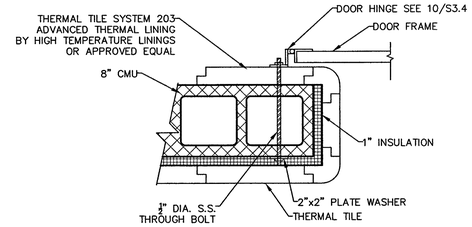

DETAIL DOOR HINGE
SCALE: 1 1/2" = 1'-0"

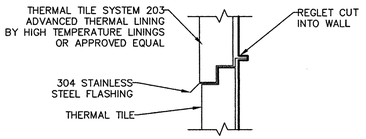

DETAIL 12 (A3.5 | A3.5)
SCALE: 3"=1'-0"

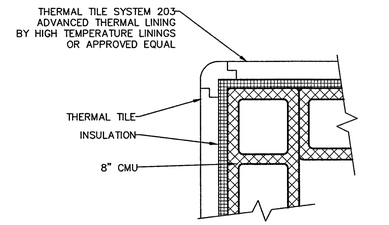

DETAIL CORNER
SCALE: 1 1/2" = 1'-0"

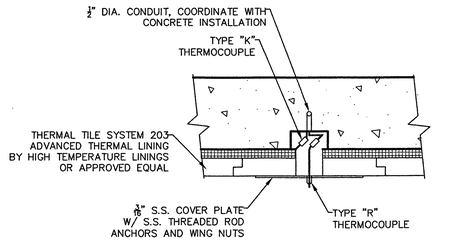

DETAIL THERMOCOUPLE
SCALE: 1 1/2" = 1'-0"

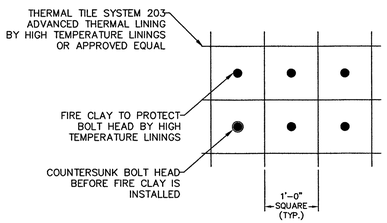

REFLECTED CEILING PLAN

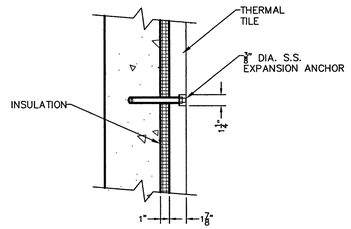

DETAIL CONCRETE ANCHOR
SCALE: 1 1/2" = 1'-0"

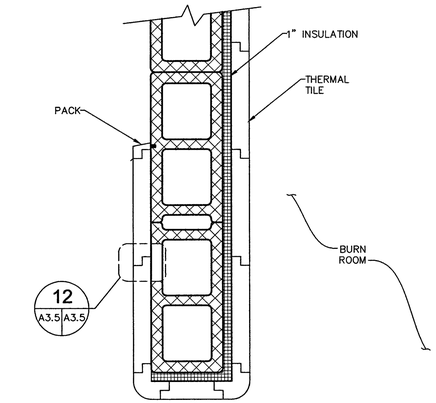

DETAIL JAMB PROTECTION
SCALE: 1 1/2" = 1'-0"

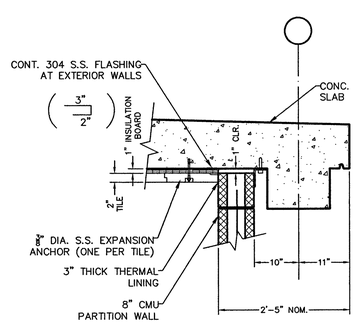

DETAIL THERMAL LINING AT CEILING
SCALE: 3/4" = 1'-0"

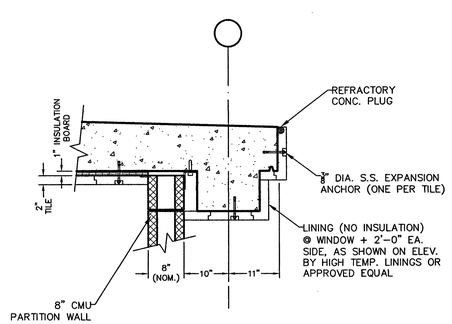

DETAIL THERMAL LINING AT SLAB EDGE ABOVE WINDOW & DOOR OPENING
SCALE: 3/4" = 1'-0"

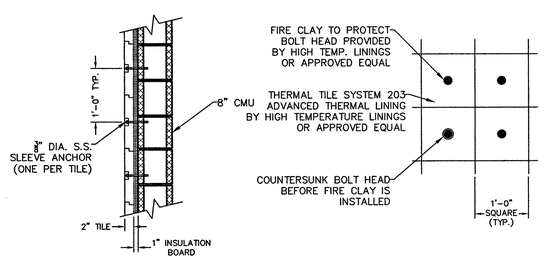

DETAIL THERMAL LINING AT WALL
SCALE: N.T.S.

VIRGINIA DEPARTMENT OF FIRE PROGRAMS

CITY OF WINCHESTER VIRGINIA

TITLE:
WALL SECTIONS AND THERMAL LINING DETAILS (BASE BID)

PROJECT:
CITY OF WINCHESTER
BURN BUILDING
1716 WOODSTOCK LANE
WINCHESTER, VIRGINIA 22602

PAINTER-LEWIS, P.L.C.
817 CEDAR CREEK GRADE, SUITE #120
WINCHESTER, VIRGINIA 22601
TELEPHONE: (540) 662-5792
FACSIMILE: (540) 662-5793
EMAIL: office@painterlewis.com
CONSULTING ENGINEERS

REVISIONS

NO.	DATE

COMMONWEALTH OF VIRGINIA
TIMOTHY G. PAINTER
Lic. No. 018260
08/15/16
PROFESSIONAL ENGINEER

DRAWN BY: RJD
JOB NO.: 1511018
DATE: 08-15-2016
SCALE: AS NOTED
SHEET: A3.5

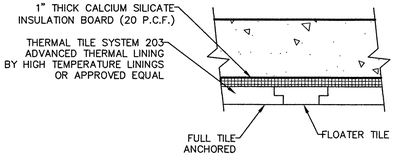

DETAIL — FLOATER
SCALE: 1 1/2" = 1'-0"

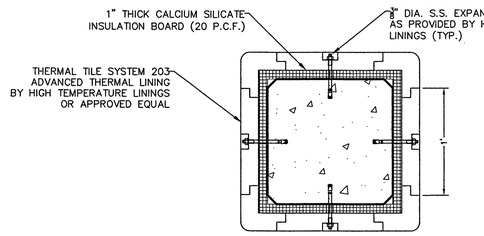

DETAIL — COLUMN PROTECTION
SCALE: 1 1/2" = 1'-0"

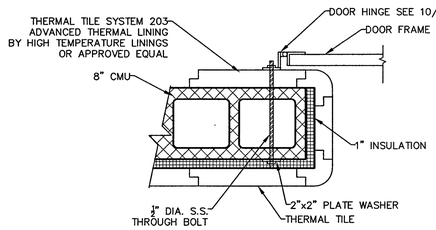

DETAIL — DOOR HINGE
SCALE: 1 1/2" = 1'-0"

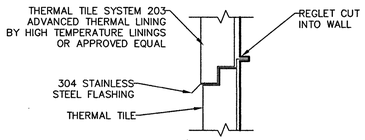

DETAIL — 12 (A3.5a A3.5a)
SCALE: 3"=1'-0"

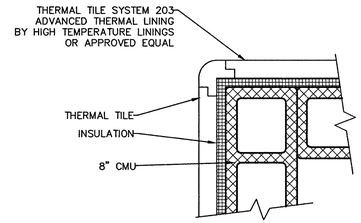

DETAIL — CORNER
SCALE: 1 1/2" = 1'-0"

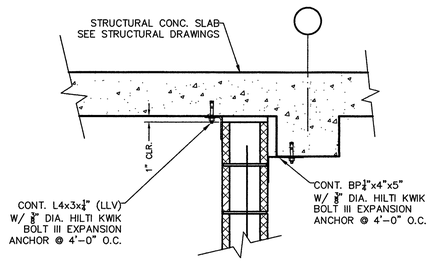

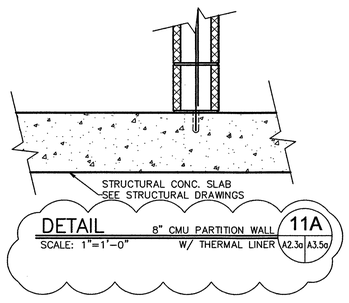

DETAIL — 8" CMU PARTITION WALL W/ THERMAL LINER — 11A (A2.3a A3.5a)
SCALE: 1"=1'-0"

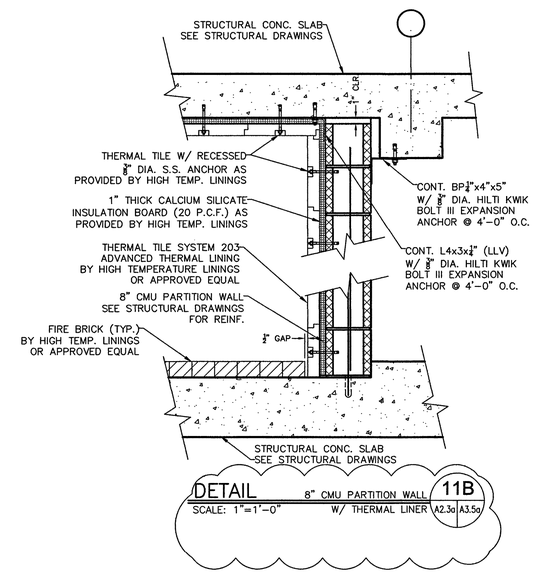

DETAIL — 8" CMU PARTITION WALL W/ THERMAL LINER — 11B (A2.3a A3.5a)
SCALE: 1"=1'-0"

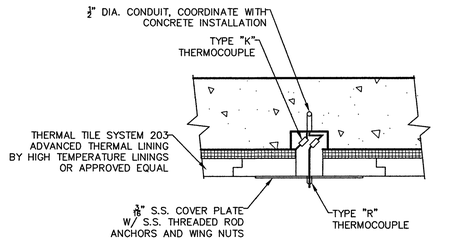

DETAIL — THERMOCOUPLE
SCALE: 1 1/2" = 1'-0"

BID ALTERNATE NOTE:
ALL ELEMENTS WITHIN THE CLOUDED AREAS SHALL BE INCLUDED IN THAT RESPECTIVE ALTERNATE BID ITEM.

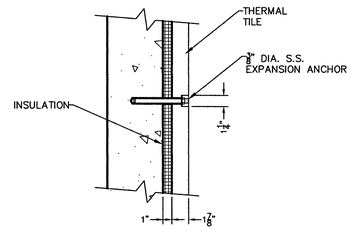

DETAIL — CONCRETE ANCHOR
SCALE: 1 1/2" = 1'-0"

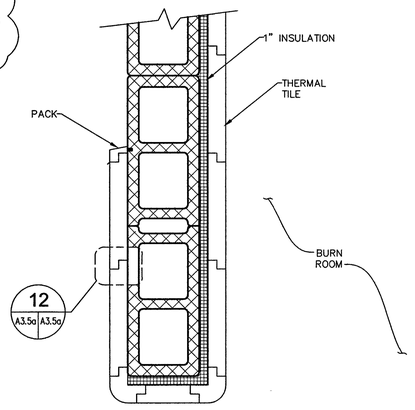

DETAIL — JAMB PROTECTION
SCALE: 1 1/2" = 1'-0"

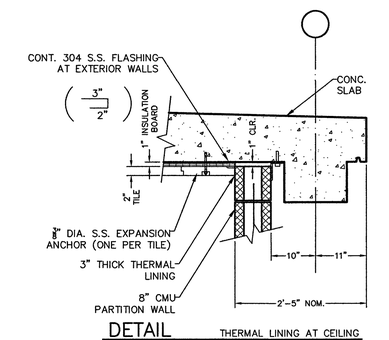

REFLECTED CEILING PLAN

DETAIL — THERMAL LINING AT CEILING
SCALE: 3/4" = 1'-0"

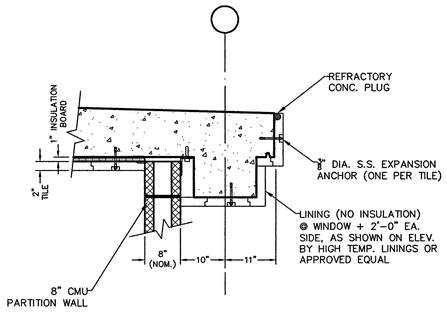

DETAIL — THERMAL LINING AT SLAB EDGE ABOVE WINDOW & DOOR OPENING
SCALE: 3/4" = 1'-0"

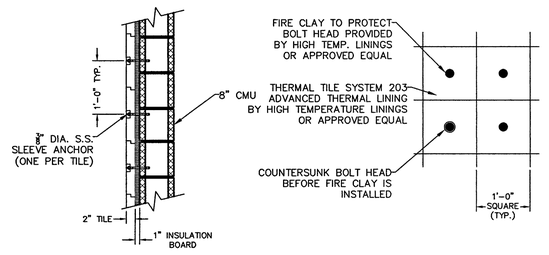

DETAIL — THERMAL LINING AT WALL
SCALE: N.T.S.

VIRGINIA DEPARTMENT OF FIRE PROGRAMS

CITY OF WINCHESTER VIRGINIA

TITLE: WALL SECTIONS AND THERMAL LINING DETAILS (ALTERNATE BID)

PROJECT:
CITY OF WINCHESTER
BURN BUILDING
1716 WOODSTOCK LANE
WINCHESTER, VIRGINIA 22602

PAINTER-LEWIS, P.L.C.
817 CEDAR CREEK GRADE, SUITE #120
WINCHESTER, VIRGINIA 22601
TELEPHONE: (540) 662-5792
FACSIMILE: (540) 662-5793
EMAIL: office@painterlewis.com
CONSULTING ENGINEERS

REVISIONS

NO.	DATE

COMMONWEALTH OF VIRGINIA — TIMOTHY G. PAINTER — Lic. No. 018260 — 08/15/16 — PROFESSIONAL ENGINEER

DRAWN BY: RJD
JOB NO.: 1511018
DATE: 08-15-2016
SCALE: AS NOTED
SHEET: A3.5a

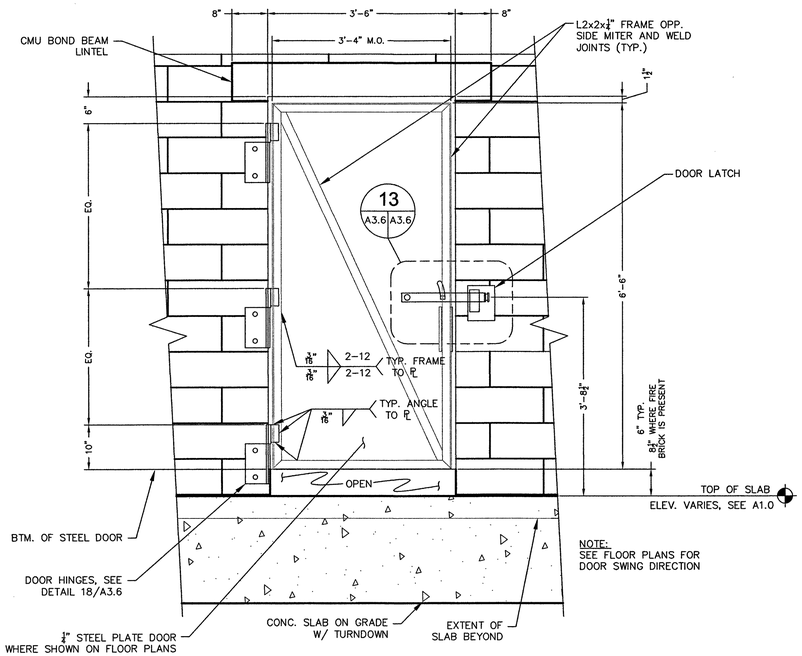

ELEVATION — DOOR

SCALE: 3/4" = 1'-0"

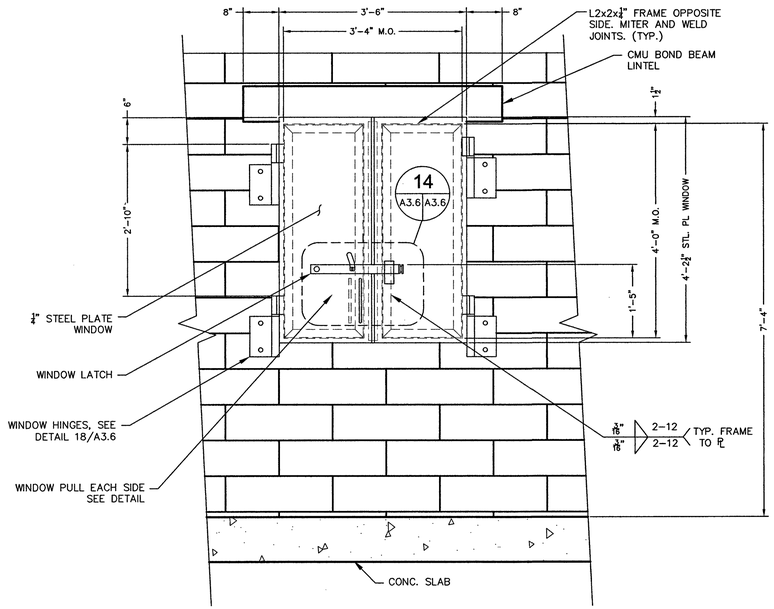

ELEVATION — WINDOW

SCALE: 3/4" = 1'-0"

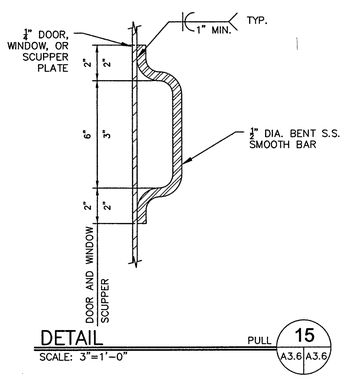

DETAIL — PULL — 15 (A3.6 A3.6)

SCALE: 3"=1'-0"

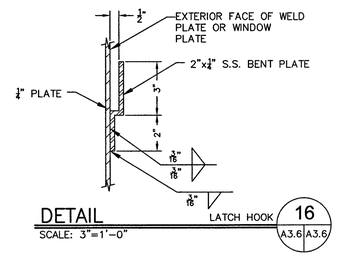

DETAIL — LATCH HOOK — 16 (A3.6 A3.6)

SCALE: 3"=1'-0"

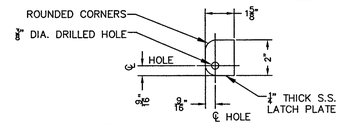

DETAIL — LATCH PLATE — 17 (A3.6 A3.6)

SCALE: 3"=1'-0"

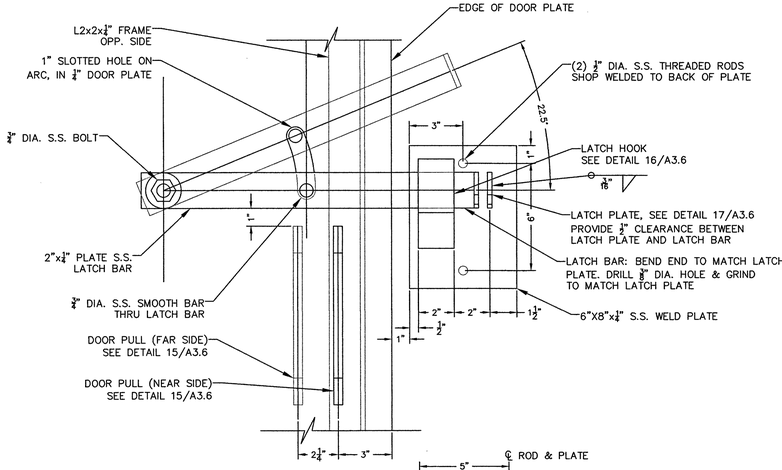

DETAIL — DOOR LATCH — 13 (A3.6 A3.6)

SCALE: 3"=1'-0"

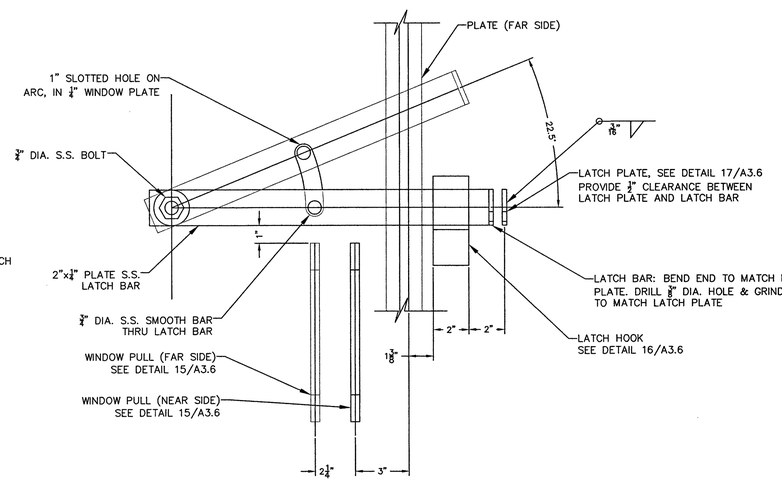

DETAIL — WINDOW LATCH — 14 (A3.6 A3.6)

SCALE: 3"=1'-0"

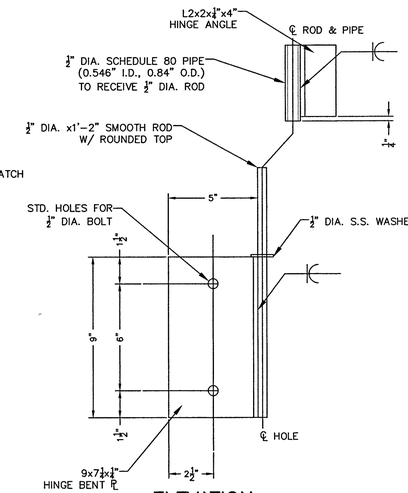

ELEVATION

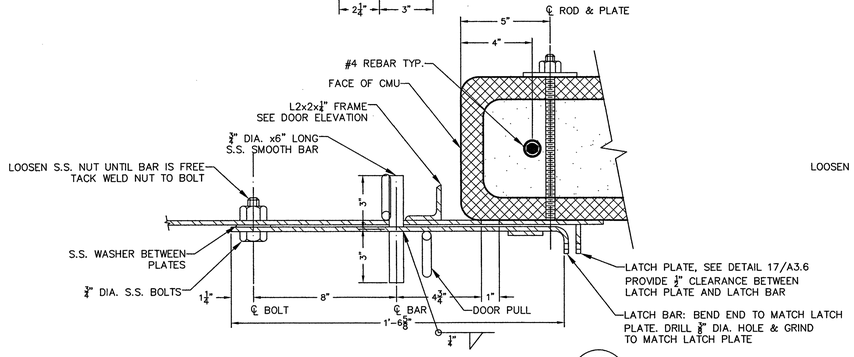

DETAIL — DOOR LATCH — 13 (A3.6 A3.6)

SCALE: 3"=1'-0"

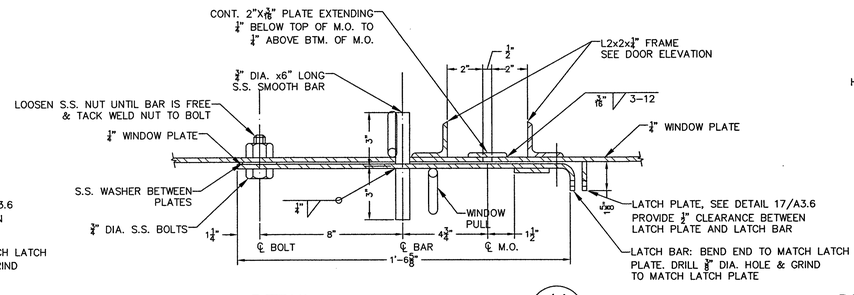

DETAIL — WINDOW LATCH — 14 (A3.6 A3.6)

SCALE: 3"=1'-0"

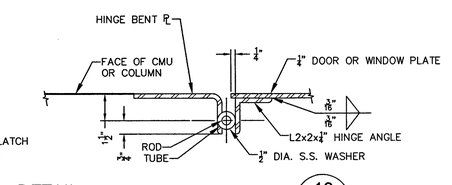

DETAIL — DOOR AND WINDOW HINGE — 18 (A3.6 A3.6)

SCALE: 3"=1'-0"

VIRGINIA DEPARTMENT OF FIRE PROGRAMS

CITY OF WINCHESTER VIRGINIA

TITLE: DOOR & WINDOW ELEVATIONS & DETAILS

PROJECT:
CITY OF WINCHESTER
BURN BUILDING
1716 WOODSTOCK LANE
WINCHESTER, VIRGINIA 22602

PAINTER-LEWIS, P.L.C.
817 CEDAR CREEK GRADE, SUITE #120
WINCHESTER, VIRGINIA 22601
TELEPHONE: (540) 662-5792
FACSIMILE: (540) 662-5793
EMAIL: office@painterlewis.com
CONSULTING ENGINEERS

REVISIONS	
NO.	DATE

COMMONWEALTH OF VIRGINIA
TIMOTHY G. PAINTER
Lic. No. 018260
08/15/16
PROFESSIONAL ENGINEER

DRAWN BY: RJD
JOB NO.: 1511018
DATE: 08-15-2016
SCALE: AS NOTED
SHEET: A3.6

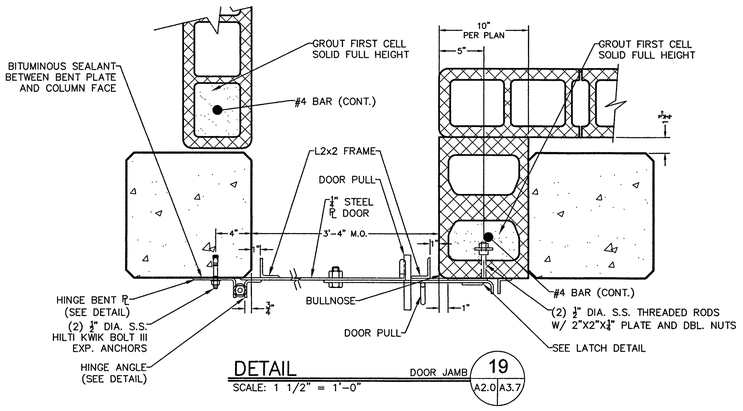

DETAIL — DOOR JAMB — 19 (A2.0 | A3.7)
SCALE: 1 1/2" = 1'-0"

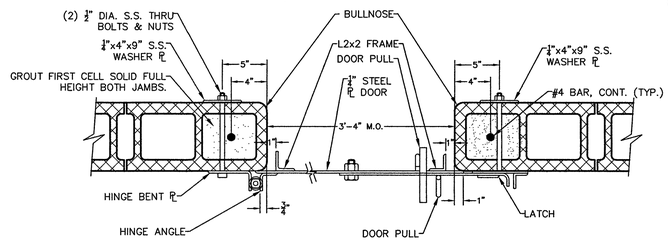

DETAIL — TYPICAL DOOR JAMB — 20 (A3.7 | A3.7)
SCALE: 1 1/2" = 1'-0"

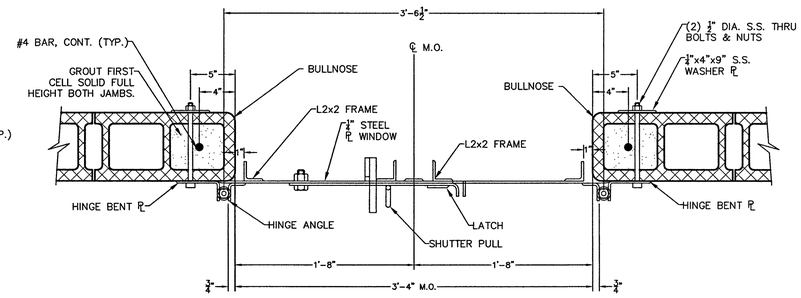

DETAIL — TYPICAL WINDOW JAMB — 21 (A3.7 | A3.7)
SCALE: 1 1/2" = 1'-0"

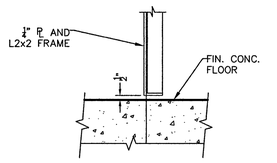

DETAIL — DOOR SILL @ ROOM 105 — SCALE: 1/2" = 1'-0"

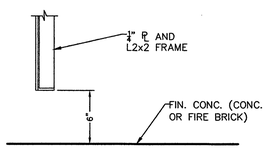

DETAIL — TYPICAL DOOR SILL — SCALE: 1/2" = 1'-0"

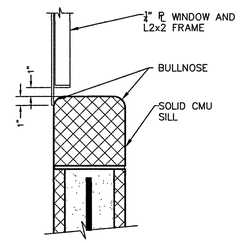

DETAIL — TYPICAL WINDOW SILL — 22 (A3.7 | A3.7)
SCALE: 1 1/2" = 1'-0"

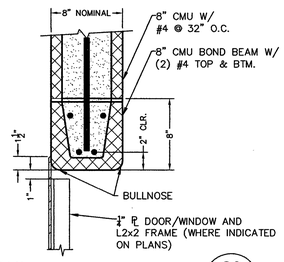

DETAIL — DOOR AND WINDOW HEAD — 23 (A3.7 | A3.7)
SCALE: 1 1/2" = 1'-0"

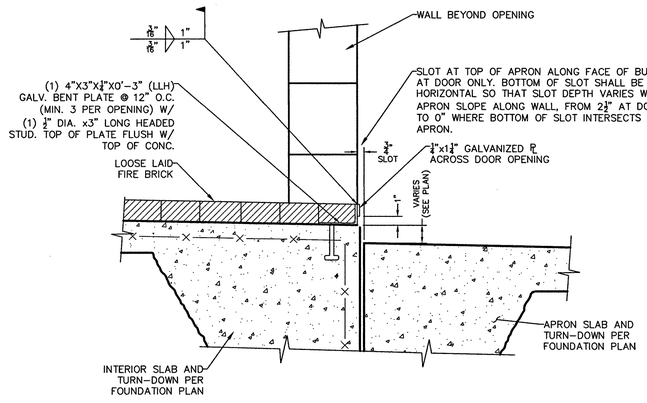

DETAIL — EXTERIOR DOOR THRESHOLD W/ FIREBRICK — 24 (A3.7 | A3.7)
SCALE: 1 1/2" = 1'-0"

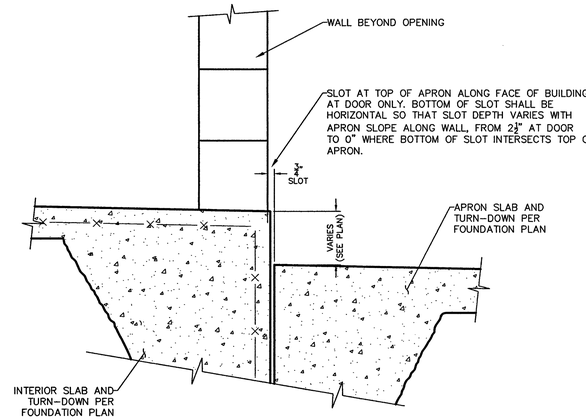

DETAIL — EXTERIOR DOOR THRESHOLD W/O FIREBRICK — 25 (A3.7 | A3.7)
SCALE: 1 1/2" = 1'-0"

WINDOW SCHEDULE

WINDOW NO.	# OF WINDOW	OPENING: MASONRY OPENING SIZE WIDTH	OPENING: MASONRY OPENING SIZE HEIGHT	JAMB	SILL	HEAD	REMARKS
101-1	1	3'-4"	4'-0"	21/A3.7	22/A3.7	23/A3.7	THERMAL PAINT-BLACK
104-1	1	3'-4"	4'-0"	21/A3.7	22/A3.7	23/A3.7	THERMAL PAINT-BLACK
104-2	1	3'-4"	4'-0"	21/A3.7	22/A3.7	23/A3.7	THERMAL PAINT-BLACK
201-1	1	3'-4"	4'-0"	21/A3.7	22/A3.7	23/A3.7	THERMAL PAINT-BLACK
204-1	1	3'-4"	4'-0"	21/A3.7	22/A3.7	23/A3.7	THERMAL PAINT-BLACK

DOOR SCHEDULE

DOOR NO.	# OF DOORS	OPENING: MASONRY OPENING SIZE WIDTH	OPENING: MASONRY OPENING SIZE HEIGHT	JAMB	SILL	HEAD	REMARKS
100-1	1	3'-4"	6'-8"	19/A3.7	25/A3.7	25/A3.7	THERMAL PAINT-BLACK
102-1	1	3'-4"	7'-0"	20/A3.7	24/A3.7	25/A3.7	THERMAL PAINT-BLACK
103-1	1	3'-4"	7'-0"	20/A3.7	25/A3.7	25/A3.7	THERMAL PAINT-BLACK
105-1	1	3'-4"	7'-0"	20/A3.7	25/A3.7	25/A3.7	THERMAL PAINT-BLACK
203-1	1	3'-4"	7'-0"	20/A3.7	25/A3.7	25/A3.7	THERMAL PAINT-BLACK
203-2	1	3'-4"	7'-0"	20/A3.7	25/A3.7	25/A3.7	THERMAL PAINT-BLACK
203-3	1	3'-4"	7'-0"	20/A3.7	25/A3.7	25/A3.7	THERMAL PAINT-BLACK
204-1	1	3'-4"	7'-0"	20/A3.7	24/A3.7	25/A3.7	THERMAL PAINT-BLACK

NOTE: INTERIOR OPENINGS WITHOUT DOORS SHALL HAVE MASONRY OPENING HEIGHT OF 7'-0" AFF.

ROOM FINISH SCHEDULE

ROOM NAME/NUMBER	FLOOR FINISH	WALL FINISH	CEILING FINISH	NOTES
101	CONCRETE W/ BROOM FINISH	CMU	CONCRETE	
102 (BURN ROOM)	LOOSE-LAID FIRE BRICK ON STEEL TROWELED CONCRETE SLAB	THERMAL LINING & CMU	THERMAL LINING	SEE SPECS FOR MEMBRANE ON TOP OF SLAB, BELOW FIRE BRICK
103	CONCRETE W/ BROOM FINISH	CMU	CONCRETE	
104	CONCRETE W/ BROOM FINISH	CMU	CONCRETE	
TEMPERATURE MONITORING ROOM	CONCRETE W/ BROOM FINISH	CMU	CONCRETE	
201 (BURN ROOM)	LOOSE-LAID FIRE BRICK ON STEEL TROWELED CONCRETE SLAB	THERMAL LINING & CMU	THERMAL LINING	SEE SPECS FOR MEMBRANE ON TOP OF SLAB, BELOW FIRE BRICK
202	CONCRETE W/ BROOM FINISH	CMU	CONCRETE	
203	CONCRETE W/ BROOM FINISH	CMU	CONCRETE	
204	CONCRETE W/ BROOM FINISH	CMU	CONCRETE	
INTERIOR STAIRS AND LANDINGS	CONCRETE W/ BROOM FINISH	CMU	CONCRETE	
EXTERIOR CONCRETE STAIRS AND LANDINGS	CONCRETE W/ BROOM FINISH	N/A	N/A	
EXTERIOR STEEL STAIRS AND LANDINGS	GALVANIZED STEEL SAFETY GRATING	N/A	N/A	
EXTERIOR APRON AROUND BUILDING	CONCRETE W/ PAVEMENT FINISH	N/A	N/A	
HIGH AND LOW ROOFS	CONCRETE W/ BROOM FINISH	N/A	N/A	

FINISH SCHEDULE NOTES:
1. ALL EXPOSED CONCRETE AND CMU SURFACES ARE UNPAINTED.
2. SEE SHEET A3.5 AND SPECIFICATION FOR THERMAL LINING.
3. WHERE WALL FINISH IS "THERMAL LINING AND CMU", SEE FLOOR PLANS FOR WALL LOCATION OF THERMAL LINING.

VIRGINIA DEPARTMENT OF FIRE PROGRAMS

CITY OF WINCHESTER VIRGINIA

TITLE: HEAD, SILL & JAMB DETAILS & WINDOW, DOOR, & FINISH SCHEDULES (BASE BID)

PROJECT: CITY OF WINCHESTER BURN BUILDING 1716 WOODSTOCK LANE WINCHESTER, VIRGINIA 22602

PAINTER-LEWIS, P.L.C.
817 CEDAR CREEK GRADE, SUITE #120
WINCHESTER, VIRGINIA 22601
TELEPHONE: (540) 662-5792
FACSIMILE: (540) 662-5793
EMAIL: office@painterlewis.com
CONSULTING ENGINEERS

REVISIONS

NO.	DATE

COMMONWEALTH OF VIRGINIA — TIMOTHY G. PAINTER — Lic. No. 018260 — 08/15/16 — PROFESSIONAL ENGINEER

DRAWN BY: RJD
JOB NO.: 1511018
DATE: 08-15-2016
SCALE: AS NOTED
SHEET: A3.7

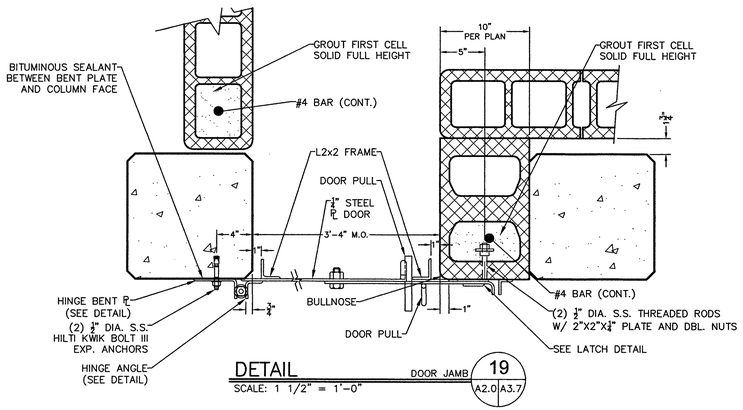

DETAIL — DOOR JAMB — 19 (A2.0 | A3.7)
SCALE: 1 1/2" = 1'-0"

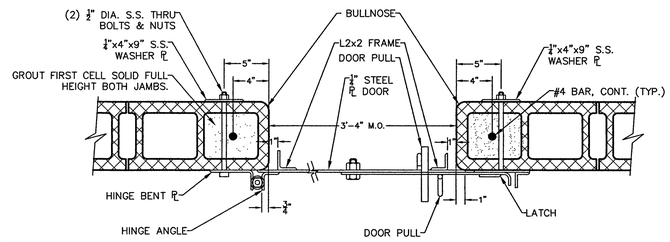

DETAIL — TYPICAL DOOR JAMB — 20 (A3.7 | A3.7)
SCALE: 1 1/2" = 1'-0"

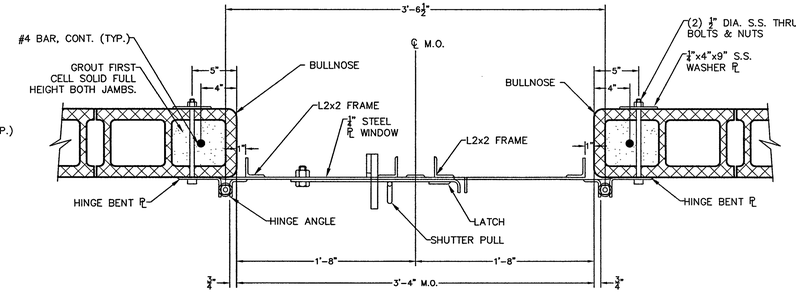

DETAIL — TYPICAL WINDOW JAMB — 21 (A3.7 | A3.7)
SCALE: 1 1/2" = 1'-0"

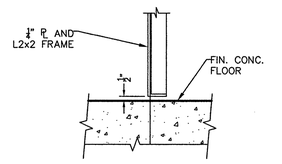

DETAIL — DOOR SILL @ ROOM 105
SCALE: 1/2" = 1'-0"

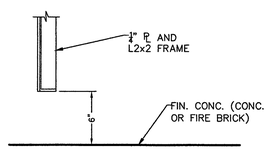

DETAIL — TYPICAL DOOR SILL
SCALE: 1/2" = 1'-0"

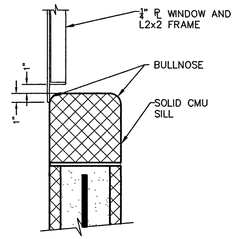

DETAIL — TYPICAL WINDOW SILL — 22 (A3.7 | A3.7)
SCALE: 1 1/2" = 1'-0"

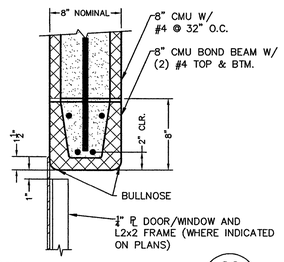

DETAIL — DOOR AND WINDOW HEAD — 23 (A3.7 | A3.7)
SCALE: 1 1/2" = 1'-0"

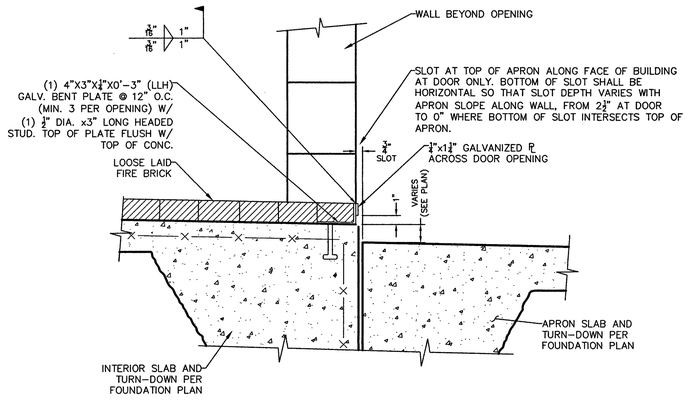

DETAIL — EXTERIOR DOOR THRESHOLD W/ FIREBRICK — 24 (A3.7 | A3.7)
SCALE: 1 1/2" = 1'-0"

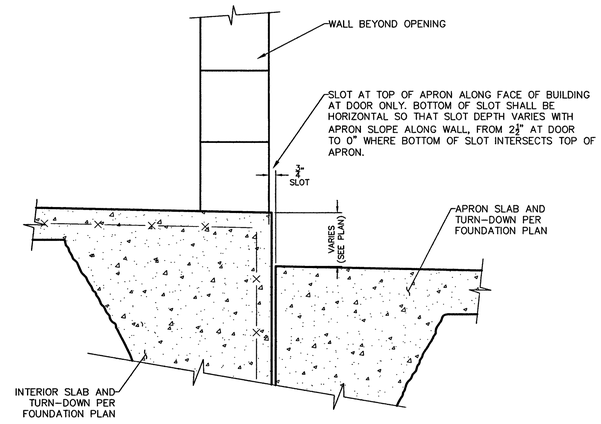

DETAIL — EXTERIOR DOOR THRESHOLD W/O FIREBRICK — 25 (A3.7 | A3.7)
SCALE: 1 1/2" = 1'-0"

WINDOW SCHEDULE

WINDOW NO.	# OF WINDOW	OPENING: MASONRY OPENING SIZE WIDTH	OPENING: MASONRY OPENING SIZE HEIGHT	JAMB	SILL	HEAD	REMARKS
101-1	1	3'-4"	4'-0"	21/A3.7	22/A3.7	23/A3.7	THERMAL PAINT-BLACK
104-1	1	3'-4"	4'-0"	21/A3.7	22/A3.7	23/A3.7	THERMAL PAINT-BLACK
104-2	1	3'-4"	4'-0"	21/A3.7	22/A3.7	23/A3.7	THERMAL PAINT-BLACK
201-1	1	3'-4"	4'-0"	21/A3.7	22/A3.7	23/A3.7	THERMAL PAINT-BLACK
203-1	1	3'-4"	4'-0"	21/A3.7	22/A3.7	23/A3.7	THERMAL PAINT-BLACK
204-1	1	3'-4"	4'-0"	21/A3.7	22/A3.7	23/A3.7	THERMAL PAINT-BLACK

WINDOW (BID ALTERNATE)

DOOR SCHEDULE

DOOR NO.	# OF DOORS	OPENING: MASONRY OPENING SIZE WIDTH	OPENING: MASONRY OPENING SIZE HEIGHT	JAMB	SILL	HEAD	REMARKS
100-1	1	3'-4"	6'-8"	19/A3.7	25/A3.7	23/A3.7	THERMAL PAINT-BLACK
102-1	1	3'-4"	7'-0"	20/A3.7	24/A3.7	23/A3.7	THERMAL PAINT-BLACK
103-1	1	3'-4"	7'-0"	20/A3.7	25/A3.7	23/A3.7	THERMAL PAINT-BLACK
105-1	1	3'-4"	7'-0"	20/A3.7	25/A3.7	23/A3.7	THERMAL PAINT-BLACK
203-1	1	3'-4"	7'-0"	20/A3.7	25/A3.7	23/A3.7	THERMAL PAINT-BLACK
203-2	1	3'-4"	7'-0"	20/A3.7	25/A3.7	23/A3.7	THERMAL PAINT-BLACK
203-3	1	3'-4"	7'-0"	20/A3.7	25/A3.7	23/A3.7	THERMAL PAINT-BLACK
204-1	1	3'-4"	7'-0"	20/A3.7	24/A3.7	23/A3.7	THERMAL PAINT-BLACK

NOTE: INTERIOR OPENINGS WITHOUT DOORS SHALL HAVE MASONRY OPENING HEIGHT OF 7'-0" A.F.F.

BID ALTERNATE NOTE:
ALL ELEMENTS WITHIN THE CLOUDED AREAS SHALL BE INCLUDED IN THAT RESPECTIVE ALTERNATE BID ITEM.

ROOM FINISH SCHEDULE

ROOM NAME/NUMBER	FLOOR FINISH	WALL FINISH	CEILING FINISH	NOTES
101	CONCRETE W/ BROOM FINISH	CMU	CONCRETE	
102 (BURN ROOM)	LOOSE-LAID FIRE BRICK ON STEEL TROWELED CONCRETE SLAB	THERMAL LINING & CMU	THERMAL LINING	SEE SPECS FOR MEMBRANE ON TOP OF SLAB, BELOW FIRE BRICK
103	CONCRETE W/ BROOM FINISH	CMU	CONCRETE	
104 (BURN ROOM)	LOOSE-LAID FIRE BRICK ON STEEL TROWELED CONCRETE SLAB	THERMAL LINING & CMU	THERMAL LINING	SEE SPECS FOR MEMBRANE ON TOP OF SLAB, BELOW FIRE BRICK
TEMPERATURE MONITORING ROOM	CONCRETE W/ BROOM FINISH	CMU	CONCRETE	
201 (BURN ROOM)	LOOSE-LAID FIRE BRICK ON STEEL TROWELED CONCRETE SLAB	THERMAL LINING & CMU	THERMAL LINING	SEE SPECS FOR MEMBRANE ON TOP OF SLAB, BELOW FIRE BRICK
202	CONCRETE W/ BROOM FINISH	CMU	CONCRETE	
203	CONCRETE W/ BROOM FINISH	CMU	CONCRETE	
204 (BURN ROOM)	LOOSE-LAID FIRE BRICK ON STEEL TROWELED CONCRETE SLAB	THERMAL LINING & CMU	THERMAL LINING	SEE SPECS FOR MEMBRANE ON TOP OF SLAB, BELOW FIRE BRICK
INTERIOR STAIRS AND LANDINGS	CONCRETE W/ BROOM FINISH	CMU	CONCRETE	
EXTERIOR CONCRETE STAIRS AND LANDINGS	CONCRETE W/ BROOM FINISH	N/A	N/A	
EXTERIOR STEEL STAIRS AND LANDINGS	GALVANIZED STEEL SAFETY GRATING	N/A	N/A	
EXTERIOR APRON AROUND BUILDING	CONCRETE W/ PAVEMENT FINISH	N/A	N/A	
HIGH AND LOW ROOFS	CONCRETE W/ BROOM FINISH	N/A	N/A	

BURN ROOM 104a (BID ALTERNATE)

BURN ROOM 204a (BID ALTERNATE)

FINISH SCHEDULE NOTES:
1. ALL EXPOSED CONCRETE AND CMU SURFACES ARE UNPAINTED.
2. SEE SHEET A3.5 AND SPECIFICATION FOR THERMAL LINING.
3. WHERE WALL FINISH IS "THERMAL LINING AND CMU", SEE FLOOR PLANS FOR WALL LOCATION OF THERMAL LINING.

VIRGINIA DEPARTMENT OF FIRE PROGRAMS

CITY OF WINCHESTER VIRGINIA FOUNDED 1744

TITLE:
HEAD, SILL & JAMB DETAILS & WINDOW, DOOR, & FINISH SCHEDULES (ALTERNATE BID)

PROJECT:
CITY OF WINCHESTER
BURN BUILDING
1716 WOODSTOCK LANE
WINCHESTER, VIRGINIA 22602

PAINTER-LEWIS, P.L.C.
817 CEDAR CREEK GRADE, SUITE #120
WINCHESTER, VIRGINIA 22601
TELEPHONE: (540) 662-5792
FACSIMILE: (540) 662-5793
EMAIL: office@painterlewis.com
CONSULTING ENGINEERS

REVISIONS

NO.	DATE

COMMONWEALTH OF VIRGINIA
TIMOTHY G. PAINTER
Lic. No. 018260
08/15/16
PROFESSIONAL ENGINEER

DRAWN BY: RJD
JOB NO.: 1511018
DATE: 08-15-2016
SCALE: AS NOTED
SHEET: A3.7a

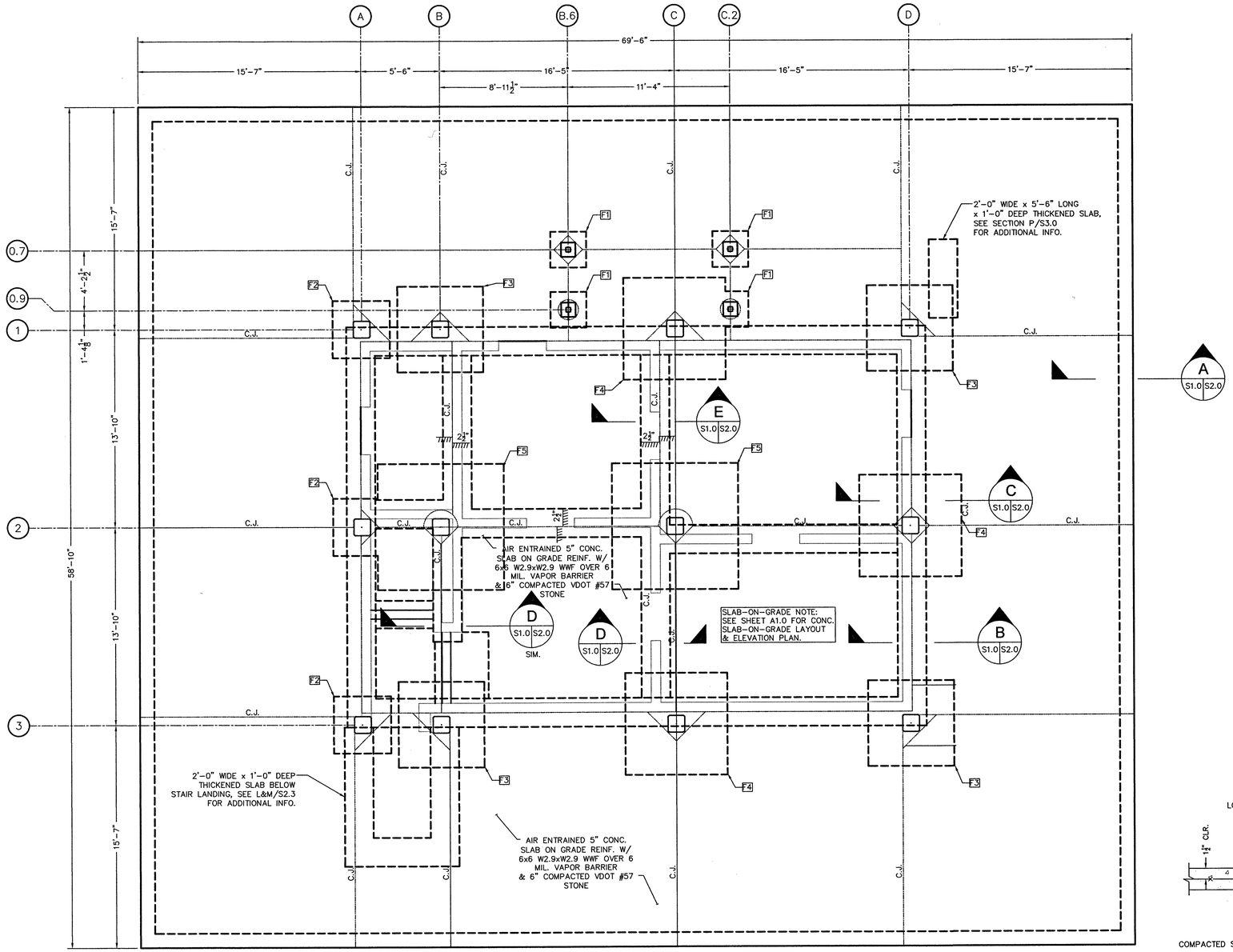

FOUNDATION PLAN

SCALE: 1/4"=1'-0"

NOTES:
1. CAST SCUPPERS AND DOORWAY WELD PLATES INTO SLAB PER FLOOR PLAN AND DETAILS.
2. SEE SECTIONS & DETAILS FOR INFORMATION ON THICKENED SLABS AND TURN DOWNS.
3. SEE SHEET A1.0 FOR SLAB ELEVATIONS.

COLUMN FOOTING SCHEDULE

MARK	SIZE	DEPTH	BOTTOM REINFORCING	PEDESTAL (5000 PSI CONC.)		
				SIZE	DOWEL	TIES
F1	2'-6" x 2'-6"	1'-0"	(3) #5 E.W.	12"x12"	(4) #6	#3 @ 6" O.C.
F2	4'-0" x 4'-0"	1'-0"	(5) #5 E.W.	---	---	---
F3	6'-0" x 6'-0"	1'-0"	(6) #5 E.W.	---	---	---
F4	7'-0" x 7'-0"	1'-2"	(7) #5 E.W.	---	---	---
F5	9'-0" x 9'-0"	1'-6"	(12) #5 E.W.	---	---	---

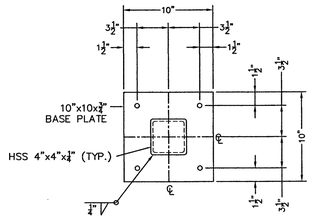

TYP. BASE PLATE DETAIL

SCALE: 1/2"=1'-0"

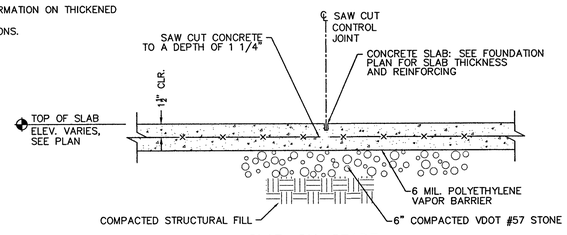

SLAB-ON-GRADE SAW CUT JOINT

SCALE: NTS

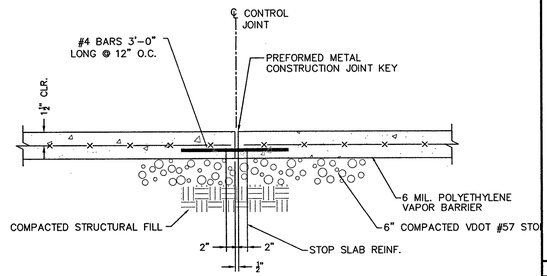

SLAB-ON-GRADE TYP. CONTROL JOINT

SCALE: NTS

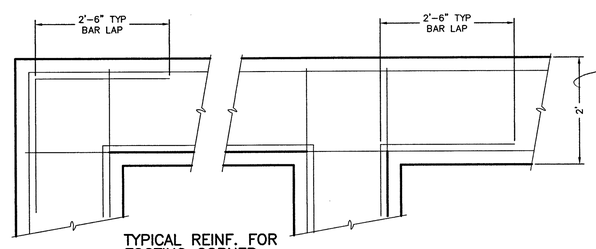

TYPICAL REINF. FOR FOOTING CORNER

SCALE: 3/4"=1'-0"

VIRGINIA DEPARTMENT OF FIRE PROGRAMS

CITY OF WINCHESTER VIRGINIA

TITLE: FOUNDATION PLAN AND DETAILS (BASE BID)

PROJECT: CITY OF WINCHESTER BURN BUILDING 1716 WOODSTOCK LANE WINCHESTER, VIRGINIA 22602

PAINTER-LEWIS, P.L.C.
817 CEDAR CREEK GRADE, SUITE #120
WINCHESTER, VIRGINIA 22601
TELEPHONE: (540) 662-5792
FACSIMILE: (540) 662-5793
EMAIL: office@painterlewis.com
CONSULTING ENGINEERS

REVISIONS

NO.	DATE

COMMONWEALTH OF VIRGINIA
TIMOTHY G. PAINTER
Lic. No. 018260
08/15/16
PROFESSIONAL ENGINEER

DRAWN BY: RJD
JOB NO.: 1511018
DATE: 08-15-2016
SCALE: AS NOTED
SHEET: S1.0

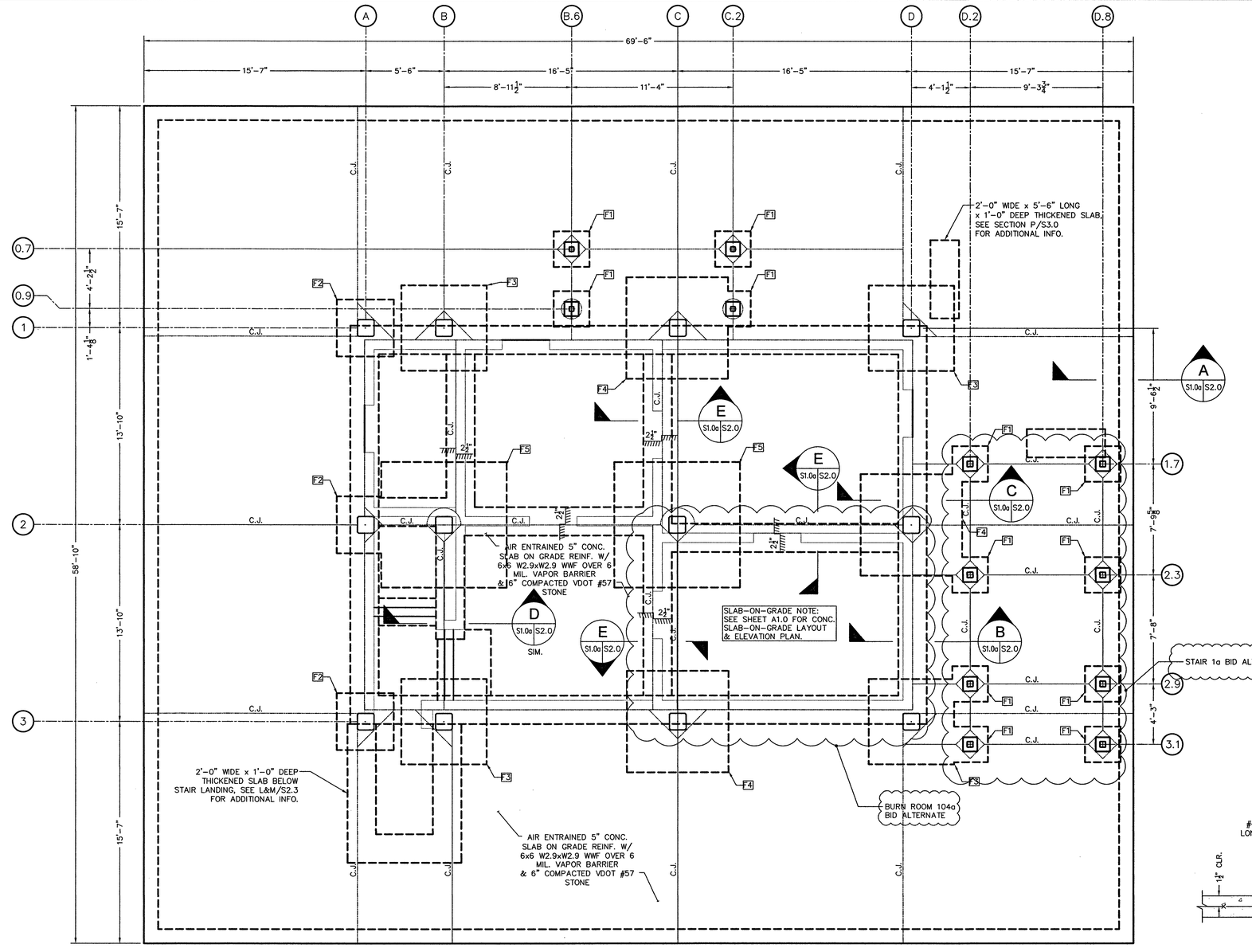

FOUNDATION PLAN

SCALE: 1/4"=1'-0"

NOTES:
1. CAST SCUPPERS AND DOORWAY WELD PLATES INTO SLAB PER FLOOR PLAN AND DETAILS.
2. SEE SECTIONS & DETAILS FOR INFORMATION ON THICKENED SLABS AND TURN DOWNS.
3. SEE SHEET A1.0 FOR SLAB ELEVATIONS.

BID ALTERNATE NOTE:
ALL ELEMENTS WITHIN THE CLOUDED AREAS SHALL BE INCLUDED IN THAT RESPECTIVE ALTERNATE BID ITEM.

COLUMN FOOTING SCHEDULE

MARK	SIZE	DEPTH	BOTTOM REINFORCING	PEDESTAL (5000 PSI CONC.) SIZE	DOWEL	TIES
F1	2'-6" x 2'-6"	1'-0"	(3) #5 E.W.	12"x12"	(4) #6	#3 @ 6" O.C.
F2	4'-0" x 4'-0"	1'-0"	(5) #5 E.W.	---	---	---
F3	6'-0" x 6'-0"	1'-0"	(6) #5 E.W.	---	---	---
F4	7'-0" x 7'-0"	1'-2"	(7) #5 E.W.	---	---	---
F5	9'-0" x 9'-0"	1'-6"	(12) #5 E.W.	---	---	---

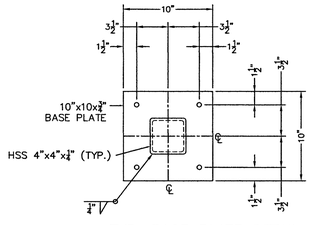

TYP. BASE PLATE DETAIL
SCALE: 1/2"=1'-0"

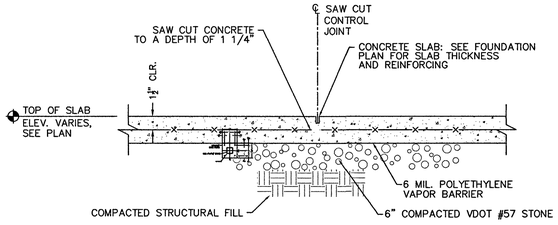

SLAB-ON-GRADE SAW CUT JOINT
SCALE: NTS

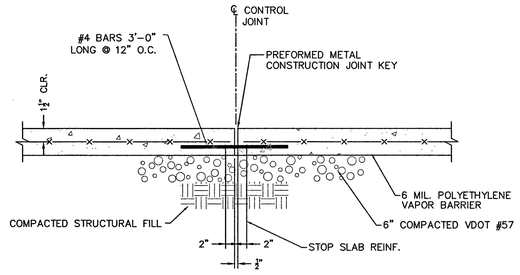

SLAB-ON-GRADE TYP. CONTROL JOINT
SCALE: NTS

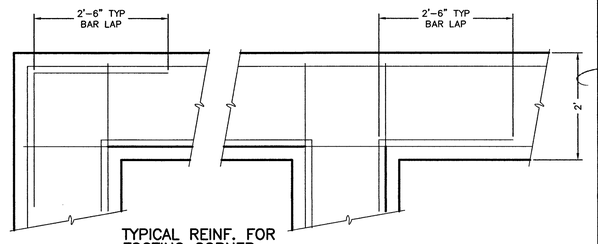

TYPICAL REINF. FOR FOOTING CORNER
SCALE: 3/4"=1'-0"

VIRGINIA DEPARTMENT OF FIRE PROGRAMS

CITY OF WINCHESTER VIRGINIA

TITLE: FOUNDATION PLAN AND DETAILS (ALTERNATE BID)

PROJECT: CITY OF WINCHESTER
BURN BUILDING
1716 WOODSTOCK LANE
WINCHESTER, VIRGINIA 22602

PAINTER-LEWIS, P.L.C.
817 CEDAR CREEK GRADE, SUITE #120
WINCHESTER, VIRGINIA 22601
TELEPHONE: (540) 662-5792
FACSIMILE: (540) 662-5793
EMAIL: office@painterlewis.com
CONSULTING ENGINEERS

REVISIONS

NO.	DATE

COMMONWEALTH OF VIRGINIA
TIMOTHY C. PAINTER
Lic. No. 018260
08/15/16
PROFESSIONAL ENGINEER

DRAWN BY: RJD
JOB NO.: 1511018
DATE: 08-15-2016
SCALE: AS NOTED
SHEET: S1.0a

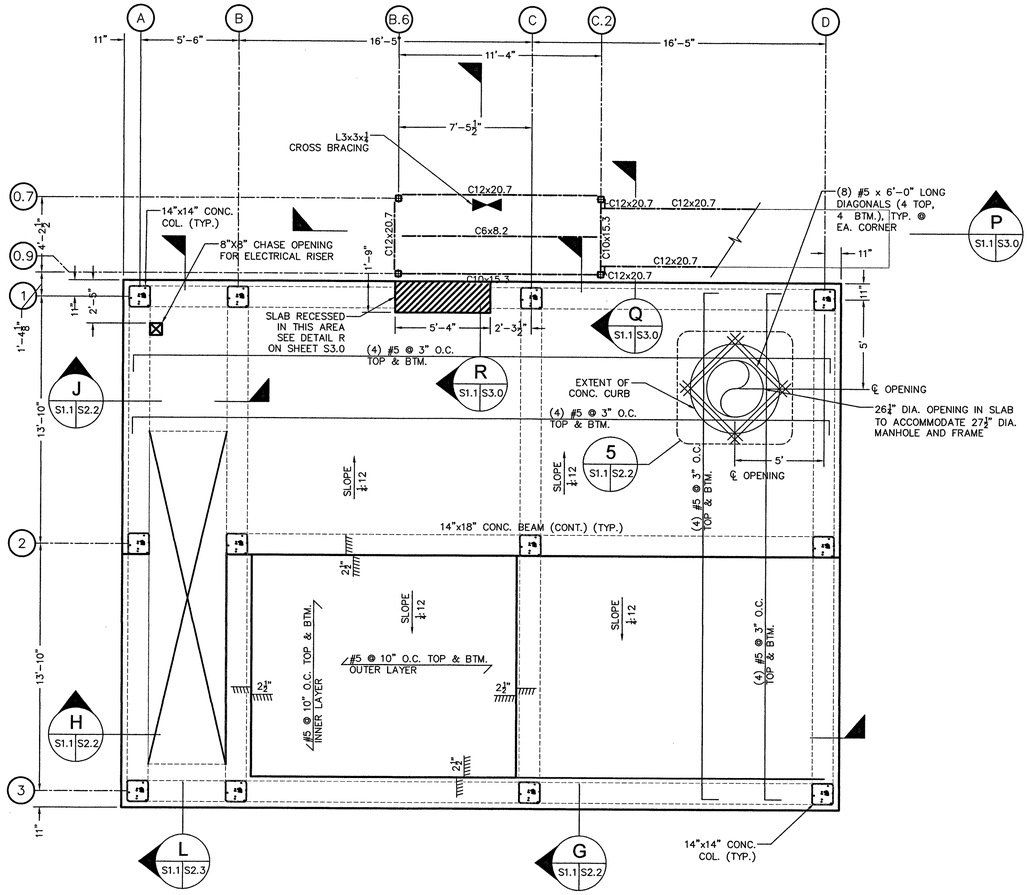

NOTE:
ALL STEEL STRUCTURAL MEMBERS IN THIS PLAN SHALL BE GALVANIZED U.N.O.

SECOND FLOOR/LOW ROOF FRAMING PLAN

SCALE: 1/4"=1'-0"

NOTES:
1. SLAB THICKNESS SHALL BE 9" THICK MINIMUM WHERE FIREBRICK IS PRESENT & 11½" THICK MINIMUM WHERE NO FIREBRICK IS TO BE INSTALLED. SLOPE TOP SURFACES ONLY.
2. SLAB REINFORCING SHALL BE #5 AT 10" O.C. CONTINUOUS BOTH WAYS TOP AND BOTTOM. INCLUDING INTERIOR STAIR LANDING.
3. OUTERMOST REINFORCING LAYERS SHALL BE IN THIS DIRECTION IN PLAN: ⟵
4. SEE PLAN FOR ADDITIONAL REINFORCING.
5. SEE SHEET A1.0 FOR CONCRETE SLAB ELEVATIONS, STEPS, AND SLOPE.
6. HOOK ENDS OF ALL TOP AND BTM. BARS THAT END AT EDGE OF SLAB OR OPENING.
7. CAST SCUPPER AND DOORWAY WELD PLATES INTO SLAB PER FLOOR PLAN DWG1, SHEET A2.1 AND DETAILS.
8. TOP SURFACE OF EXTERIOR FLAT ROOF SHALL BE SEALED WITH A CEMENTITIOUS COATING SUCH AS SIKATOP SEAL 107.

SYMBOLS

CROSS BRACING: L3x3x¼" GALV.

KNEE BRACING: L3x3x¼" GALV.

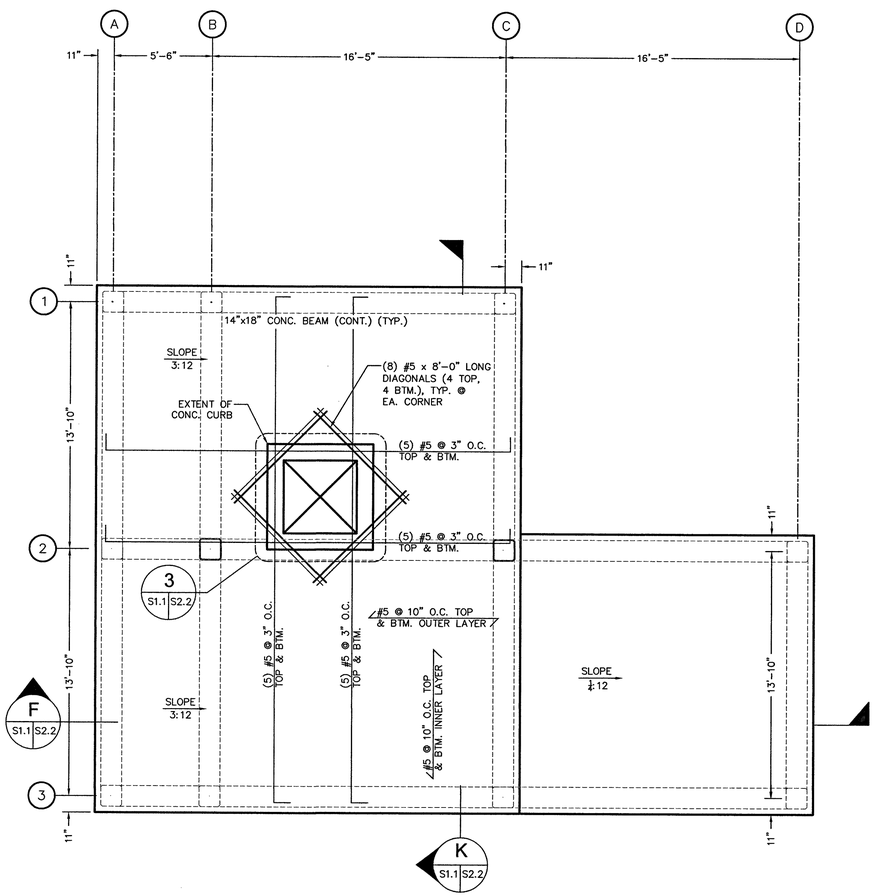

NOTE:
ALL STEEL STRUCTURAL MEMBERS IN THIS PLAN SHALL BE GALVANIZED U.N.O.

HIGH ROOF FRAMING PLAN

SCALE: 1/4"=1'-0"

NOTES:
1. SLAB THICKNESS SHALL BE 9" SLOPE TOP & BOTTOM SURFACES TO MAINTAIN THICKNESS.
2. SLAB REINFORCING SHALL BE #5 AT 10" O.C. CONTINUOUS BOTH WAYS TOP AND BTM.
3. OUTERMOST REINFORCING LAYERS SHALL BE IN THIS DIRECTION IN PLAN: ⟵
4. SEE PLAN FOR ADDITIONAL REINFORCING.
5. SEE SHEET A2.1 FOR CONCRETE SLAB ELEVATIONS, STEPS, AND SLOPE.
6. HOOK ENDS OF ALL TOP AND BTM. BARS THAT END AT EDGE OF SLAB OR OPENING.
7. TOP SURFACE OF EXTERIOR FLAT ROOF SHALL BE SEALED WITH A CEMENTITIOUS COATING SUCH AS SIKATOP SEAL 107.

VIRGINIA DEPARTMENT OF FIRE PROGRAMS

CITY OF WINCHESTER VIRGINIA

TITLE:
SECOND FLOOR/LOW ROOF AND HIGH ROOF FRAMING PLANS (BASE BID)

PROJECT:
CITY OF WINCHESTER
BURN BUILDING
1716 WOODSTOCK LANE
WINCHESTER, VIRGINIA 22602

PAINTER-LEWIS, P.L.C.
817 CEDAR CREEK GRADE, SUITE #120
WINCHESTER, VIRGINIA 22601
TELEPHONE: (540) 662-5792
FACSIMILE: (540) 662-5793
EMAIL: office@painterlewis.com
CONSULTING ENGINEERS

REVISIONS

NO.	DATE

COMMONWEALTH OF VIRGINIA
TIMOTHY S. PAINTER
Lic. No. 018260
08/15/16
PROFESSIONAL ENGINEER

DRAWN BY: RJD
JOB NO.: 1511018
DATE: 08-15-2016
SCALE: AS NOTED
SHEET: S1.1

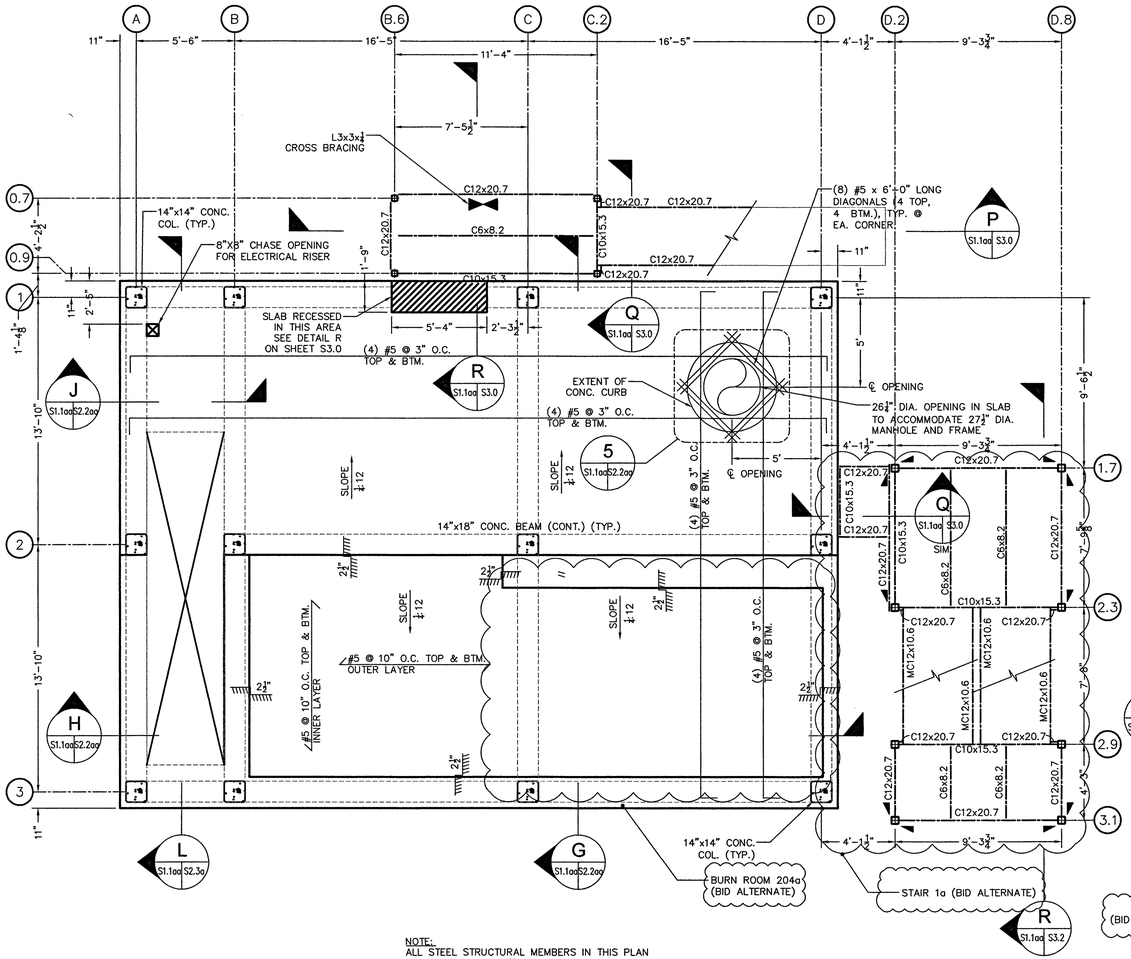

NOTE:
ALL STEEL STRUCTURAL MEMBERS IN THIS PLAN SHALL BE GALVANIZED U.N.O.

SECOND FLOOR/LOW ROOF FRAMING PLAN

SCALE: 1/4"=1'-0"

NOTES:
1. SLAB THICKNESS SHALL BE 9" THICK MINIMUM WHERE FIREBRICK IS PRESENT & 11¼" THICK MINIMUM WHERE NO FIREBRICK IS TO BE INSTALLED. SLOPE TOP SURFACES ONLY.
2. SLAB REINFORCING SHALL BE #5 AT 10" O.C. CONTINUOUS BOTH WAYS TOP AND BOTTOM, INCLUDING INTERIOR STAIR LANDING.
3. OUTERMOST REINFORCING LAYERS SHALL BE IN THIS DIRECTION IN PLAN: ⟶
4. SEE PLAN FOR ADDITIONAL REINFORCING.
5. SEE SHEET A1.0 FOR CONCRETE SLAB ELEVATIONS, STEPS, AND SLOPE.
6. HOOK ENDS OF ALL TOP AND BTM. BARS THAT END AT EDGE OF SLAB OR OPENING.
7. CAST SCUPPER AND DOORWAY WELD PLATES INTO SLAB PER FLOOR PLAN DWG1, SHEET A2.1 AND DETAILS.
8. TOP SURFACE OF EXTERIOR FLAT ROOF SHALL BE SEALED WITH A CEMENTITIOUS COATING SUCH AS SIKATOP SEAL 107.

SYMBOLS

CROSS BRACING: L3x3x¼" GALV.

KNEE BRACING: L3x3x¼" GALV.

BID ALTERNATE NOTE:
ALL ELEMENTS WITHIN THE CLOUDED AREAS SHALL BE INCLUDED IN THAT RESPECTIVE ALTERNATE BID ITEM.

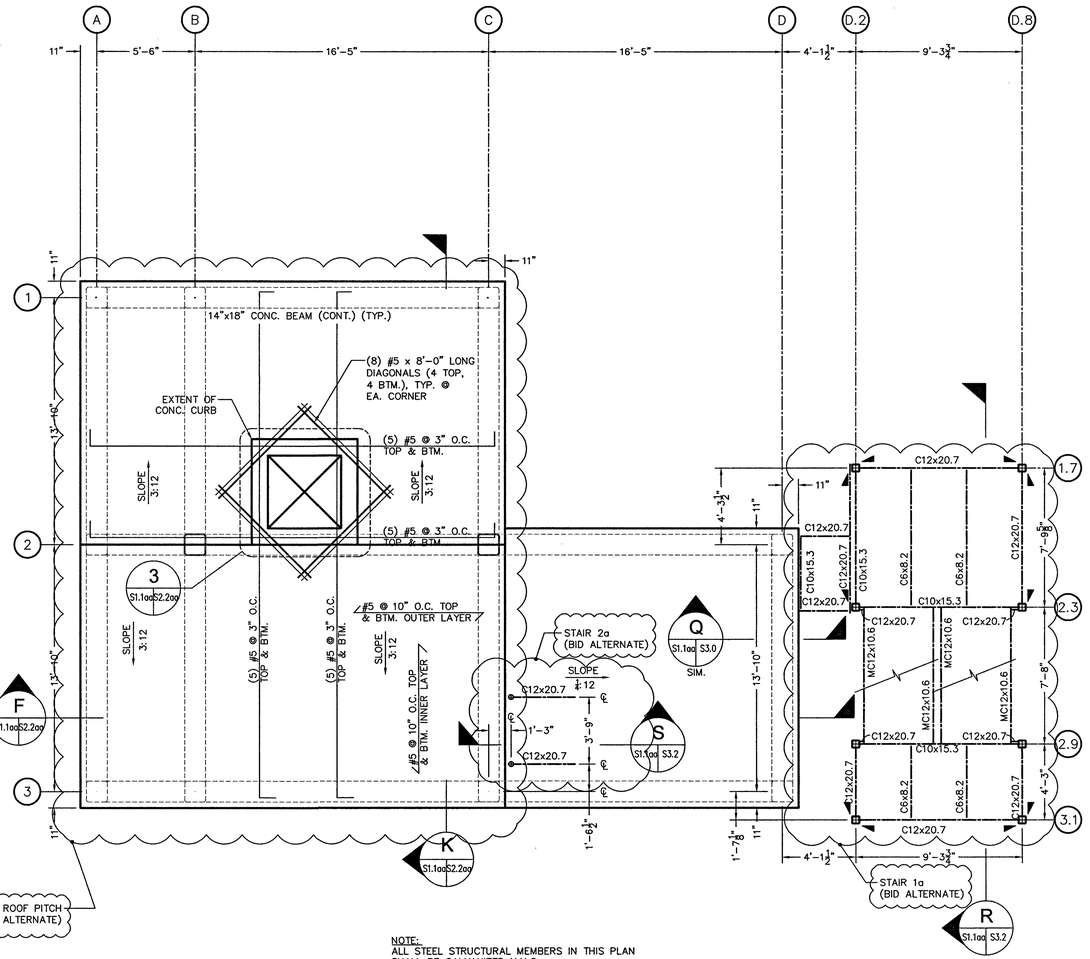

NOTE:
ALL STEEL STRUCTURAL MEMBERS IN THIS PLAN SHALL BE GALVANIZED U.N.O.

HIGH ROOF FRAMING PLAN

SCALE: 1/4"=1'-0"

NOTES:
1. SLAB THICKNESS SHALL BE 9" SLOPE TOP & BOTTOM SURFACES TO MAINTAIN THICKNESS.
2. SLAB REINFORCING SHALL BE #5 AT 10" O.C. CONTINUOUS BOTH WAYS TOP AND BTM.
3. OUTERMOST REINFORCING LAYERS SHALL BE IN THIS DIRECTION IN PLAN: ⟶
4. SEE PLAN FOR ADDITIONAL REINFORCING.
5. SEE SHEET A2.1 FOR CONCRETE SLAB ELEVATIONS, STEPS, AND SLOPE.
6. HOOK ENDS OF ALL TOP AND BTM. BARS THAT END AT EDGE OF SLAB OR OPENING.
7. TOP SURFACE OF EXTERIOR FLAT ROOF SHALL BE SEALED WITH A CEMENTITIOUS COATING SUCH AS SIKATOP SEAL 107.

VIRGINIA DEPARTMENT OF FIRE PROGRAMS

CITY OF WINCHESTER VIRGINIA

TITLE:
SECOND FLOOR/LOW ROOF AND HIGH ROOF FRAMING PLANS (ALTERNATE BID)

PROJECT:
CITY OF WINCHESTER
BURN BUILDING
1716 WOODSTOCK LANE
WINCHESTER, VIRGINIA 22602

PAINTER-LEWIS, P.L.C.
817 CEDAR CREEK GRADE, SUITE #120
WINCHESTER, VIRGINIA 22601
TELEPHONE: (540) 662-5792
FACSIMILE: (540) 662-5793
EMAIL: office@painterlewis.com
CONSULTING ENGINEERS

REVISIONS

NO.	DATE

COMMONWEALTH OF VIRGINIA
TIMOTHY G. PAINTER
Lic. No. 018260
08/15/16
PROFESSIONAL ENGINEER

DRAWN BY: RJD
JOB NO.: 1511018
DATE: 08-15-2016
SCALE: AS NOTED
SHEET: S1.1a

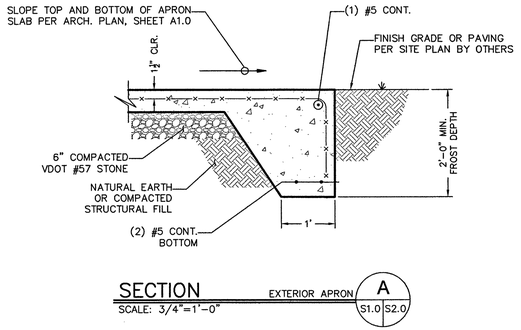

SECTION — EXTERIOR APRON — A
SCALE: 3/4"=1'-0" — S1.0 | S2.0

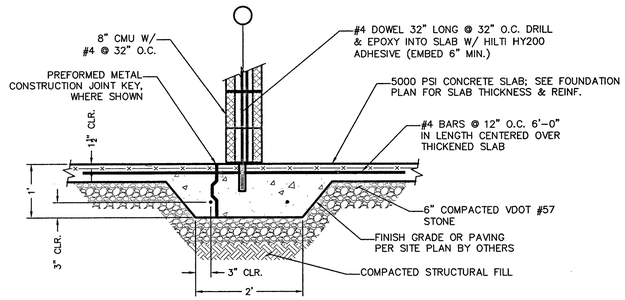

SECTION — D
SCALE: 3/4"=1'-0" — S1.0 | S2.0

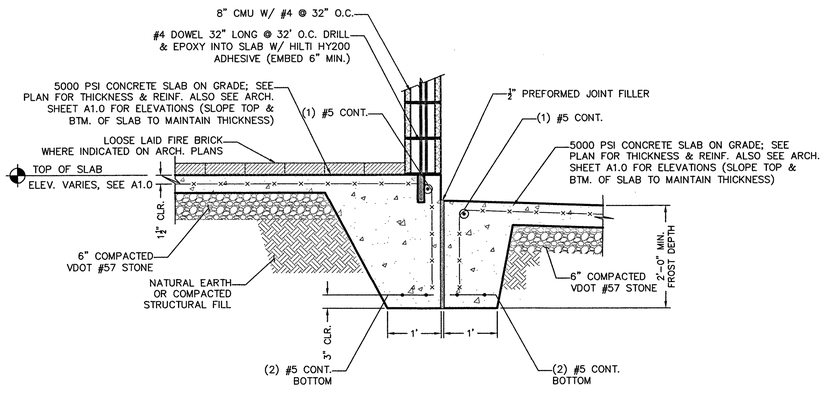

SECTION — B
SCALE: 3/4"=1'-0" — S1.0 | S2.0

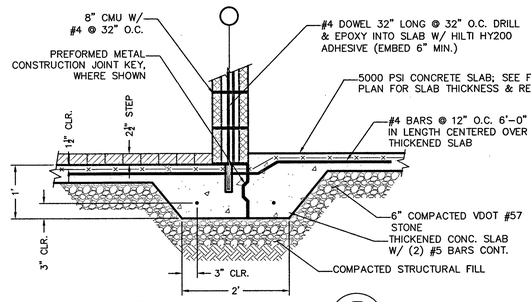

SECTION — E
SCALE: 3/4"=1'-0" — S1.0 | S2.0

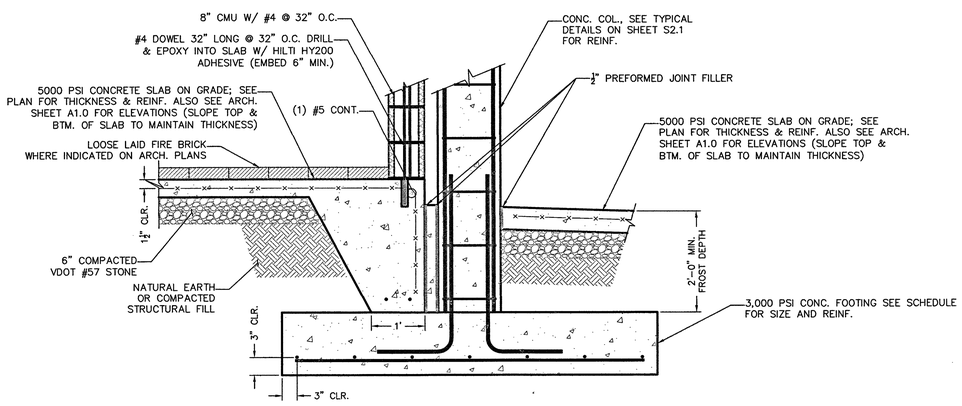

SECTION — C
SCALE: 3/4"=1'-0" — S1.0 | S2.0

VIRGINIA DEPARTMENT OF FIRE PROGRAMS

CITY OF WINCHESTER VIRGINIA

TITLE: FOUNDATION SECTIONS

PROJECT:
CITY OF WINCHESTER
BURN BUILDING
1716 WOODSTOCK LANE
WINCHESTER, VIRGINIA 22602

PAINTER-LEWIS, P.L.C.
817 CEDAR CREEK GRADE, SUITE #120
WINCHESTER, VIRGINIA 22601
TELEPHONE: (540) 662-5792
FACSIMILE: (540) 662-5793
EMAIL: office@painterlewis.com
CONSULTING ENGINEERS

REVISIONS

NO.	DATE

COMMONWEALTH OF VIRGINIA
TIMOTHY G. PAINTER
Lic. No. 018260
08/15/16
PROFESSIONAL ENGINEER

DRAWN BY: RJD
JOB NO.: 1511018
DATE: 08-15-2016
SCALE: AS NOTED
SHEET: S2.0

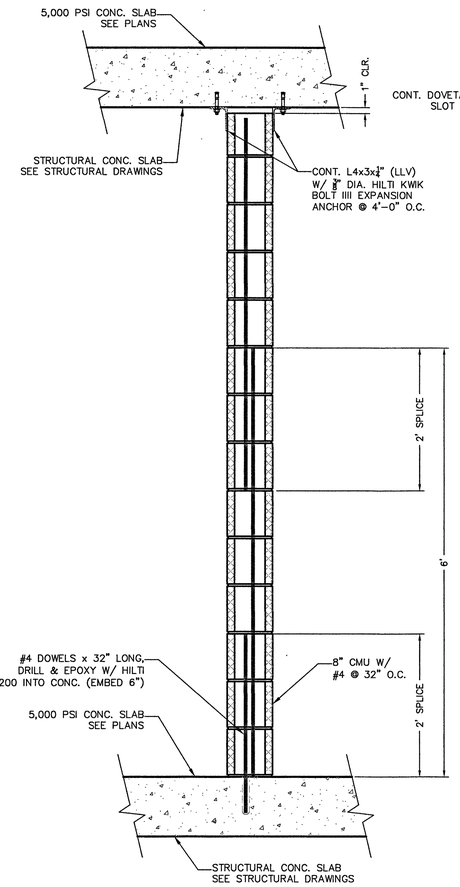

DETAIL TYP. 8" CMU WALL
SCALE: 1"=1'-0"

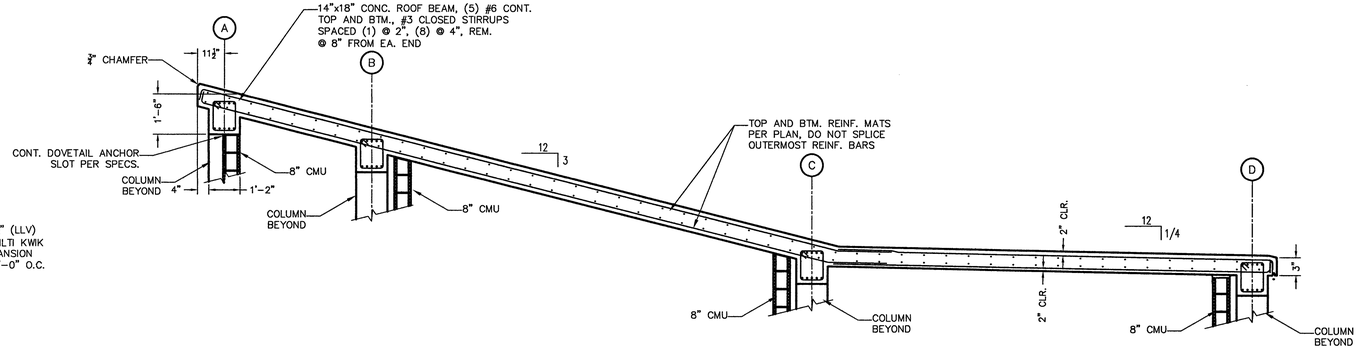

SECTION HIGH ROOF F
SCALE: 3/8"=1'-0"

NOTES:
1. SLAB THICKNESS SHALL BE 9" THICK MINIMUM WHERE FIREBRICK IS PRESENT & 11½" THICK MINIMUM WHERE NO FIREBRICK IS TO BE INSTALLED. SLOPE TOP SURFACES ONLY.
2. SLAB REINFORCING SHALL BE #5 AT 10" O.C. CONTINUOUS BOTH WAYS TOP AND BOTTOM. INCLUDING INTERIOR STAIR LANDING.
3. OUTERMOST REINFORCING LAYERS SHALL BE IN THIS DIRECTION IN PLAN: ←→
4. SEE PLAN FOR ADDITIONAL REINFORCING.
5. SEE SHEET A1.0 FOR CONCRETE SLAB ELEVATIONS, STEPS, AND SLOPE.
6. HOOK ENDS OF ALL TOP AND BTM. BARS THAT END AT EDGE OF SLAB OR OPENING.
7. CAST SCUPPER AND DOORWAY WELD PLATES INTO SLAB PER FLOOR PLAN DWG1, SHEET A2.1 AND DETAILS.
8. TOP SURFACE OF EXTERIOR FLAT ROOF SHALL BE SEALED WITH A CEMENTITIOUS COATING SUCH AS SIKATOP SEAL 107.

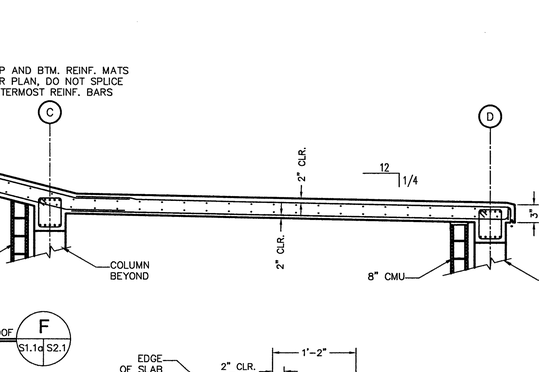

DETAIL TYP. COLUMN REINFORCING
SCALE: 1"=1'-0" CORNER COLUMN

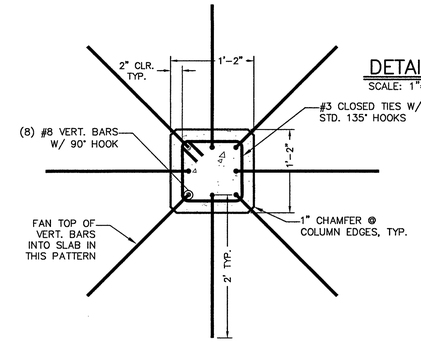

DETAIL TYP. COLUMN REINFORCING
SCALE: 1"=1'-0" INTERIOR COLUMN

DETAIL TYP. COLUMN REINFORCING 1 S2.1 S2.1
SCALE: 1"=1'-0"

SLAB REINF. NOT SHOWN FOR CLARITY

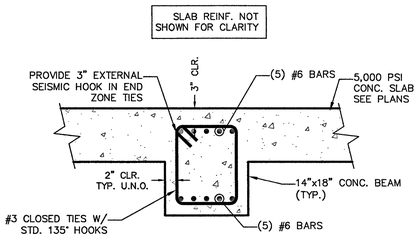

DETAIL TYP. BEAM REINFORCING 2 S2.1 S2.1
SCALE: 1"=1'-0"

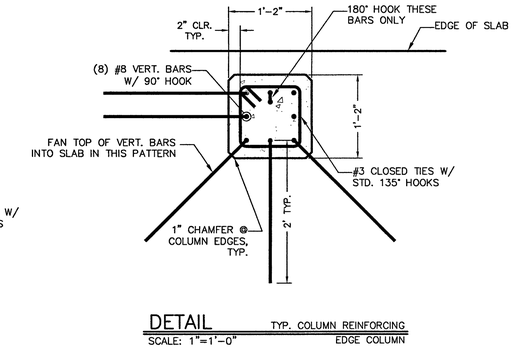

DETAIL TYP. COLUMN REINFORCING
SCALE: 1"=1'-0" EDGE COLUMN

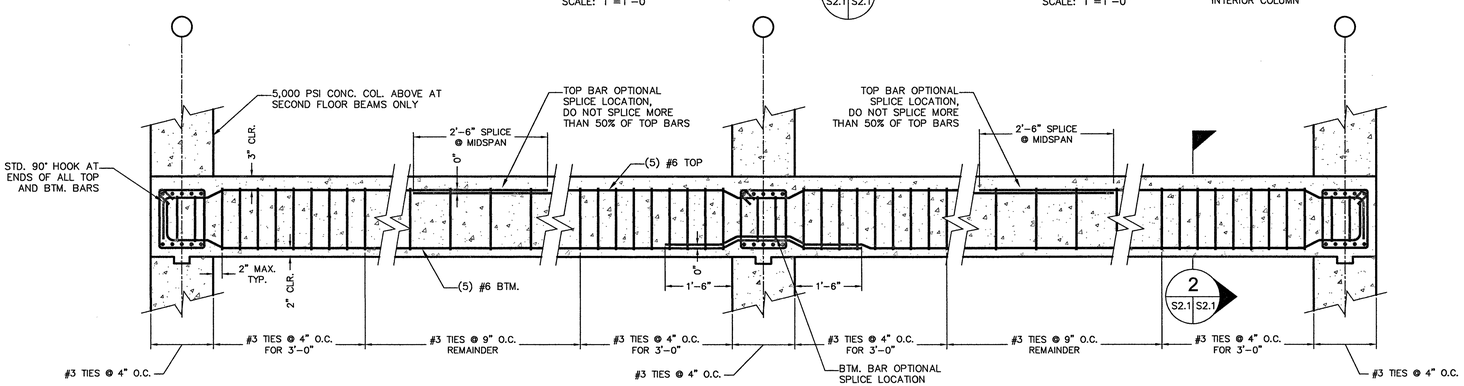

NOTE:
CONC. COL. REINF. NOT SHOWN FOR CLARITY

DETAIL TYPICAL BEAM BAR PLACING DIAGRAM
SCALE: 3/4"=1'-0"

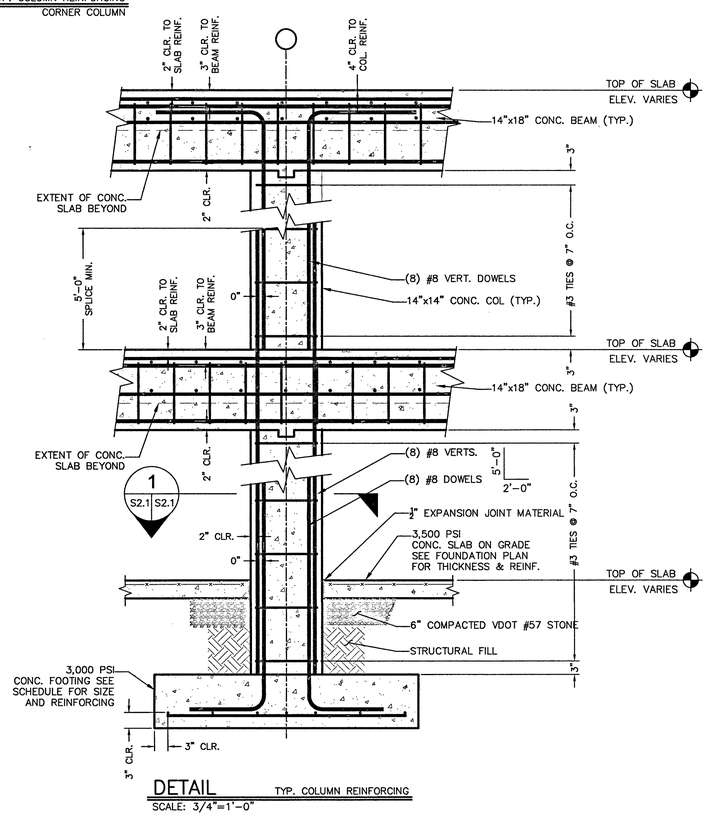

DETAIL TYP. COLUMN REINFORCING
SCALE: 3/4"=1'-0"

VIRGINIA DEPARTMENT OF FIRE PROGRAMS

CITY OF WINCHESTER VIRGINIA

TITLE: CONCRETE COLUMN & BEAM SECTIONS & TYPICAL DETAILS (BASE BID)

PROJECT: CITY OF WINCHESTER
BURN BUILDING
1716 WOODSTOCK LANE
WINCHESTER, VIRGINIA 22602

PAINTER-LEWIS, P.L.C.
817 CEDAR CREEK GRADE, SUITE #120
WINCHESTER, VIRGINIA 22601
TELEPHONE: (540) 662-5792
FACSIMILE: (540) 662-5793
EMAIL: office@painterlewis.com
CONSULTING ENGINEERS

REVISIONS

NO.	DATE

COMMONWEALTH OF VIRGINIA
TIMOTHY G. PAINTER
Lic. No. 018260
08/15/16
PROFESSIONAL ENGINEER

DRAWN BY: RJD
JOB NO.: 1511018
DATE: 08-15-2016
SCALE: AS NOTED
SHEET: S2.1

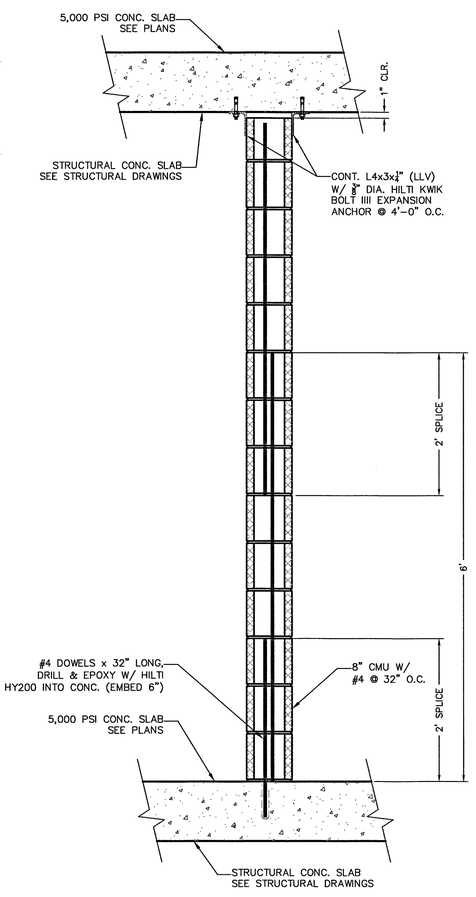

DETAIL TYP. 8" CMU WALL
SCALE: 1"=1'-0"

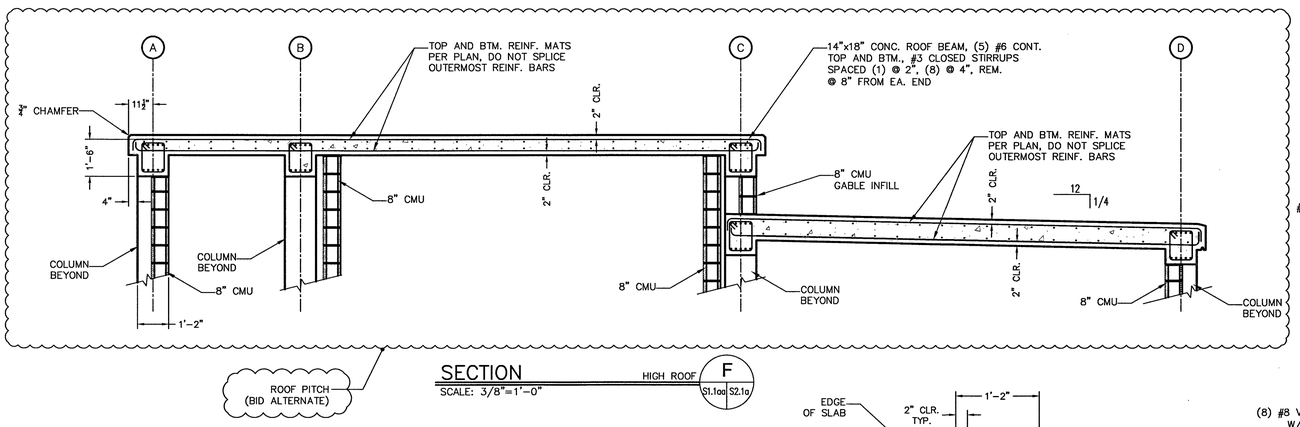

SECTION HIGH ROOF (F)
SCALE: 3/8"=1'-0"

NOTES:
1. SLAB THICKNESS SHALL BE 9" THICK MINIMUM WHERE FIREBRICK IS PRESENT & 11½" THICK MINIMUM WHERE NO FIREBRICK IS TO BE INSTALLED. SLOPE TOP SURFACES ONLY.
2. SLAB REINFORCING SHALL BE #5 AT 10" O.C. CONTINUOUS BOTH WAYS TOP AND BOTTOM, INCLUDING INTERIOR STAIR LANDING.
3. OUTERMOST REINFORCING LAYERS SHALL BE IN THIS DIRECTION IN PLAN: ⟷
4. SEE PLAN FOR ADDITIONAL REINFORCING.
5. SEE SHEET A1.0 FOR CONCRETE SLAB ELEVATIONS, STEPS, AND SLOPE.
6. HOOK ENDS OF ALL TOP AND BTM. BARS THAT END AT EDGE OF SLAB OR OPENING.
7. CAST SCUPPER AND DOORWAY WELD PLATES INTO SLAB PER FLOOR PLAN DWG1, SHEET A2.1 AND DETAILS.
8. TOP SURFACE OF EXTERIOR FLAT ROOF SHALL BE SEALED WITH A CEMENTITIOUS COATING SUCH AS SIKATOP SEAL 107.

SLAB REINF. NOT SHOWN FOR CLARITY

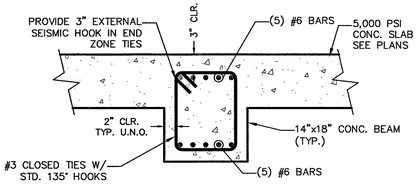

DETAIL TYP. BEAM REINFORCING (2 S2.1a S2.1a)
SCALE: 1"=1'-0"

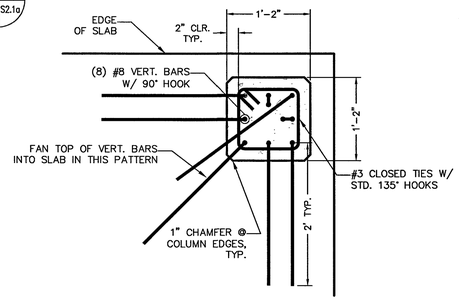

DETAIL TYP. COLUMN REINFORCING EDGE COLUMN
SCALE: 1"=1'-0"

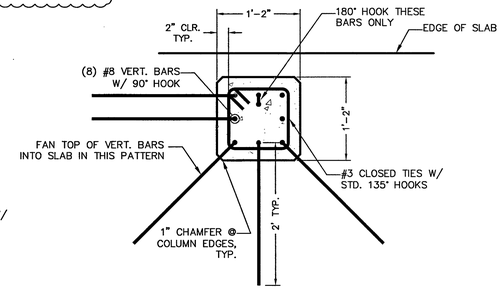

DETAIL TYP. COLUMN REINFORCING CORNER COLUMN
SCALE: 1"=1'-0"

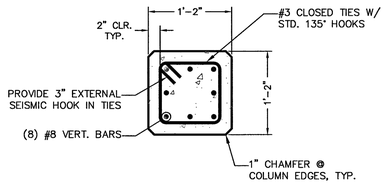

DETAIL TYP. COLUMN REINFORCING (1 S2.1a S2.1a)
SCALE: 1"=1'-0"

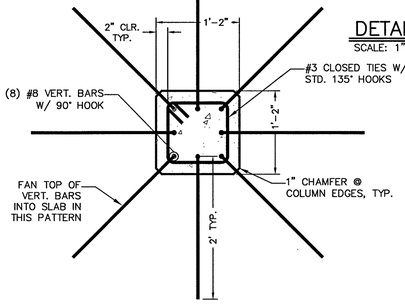

DETAIL TYP. COLUMN REINFORCING INTERIOR COLUMN
SCALE: 1"=1'-0"

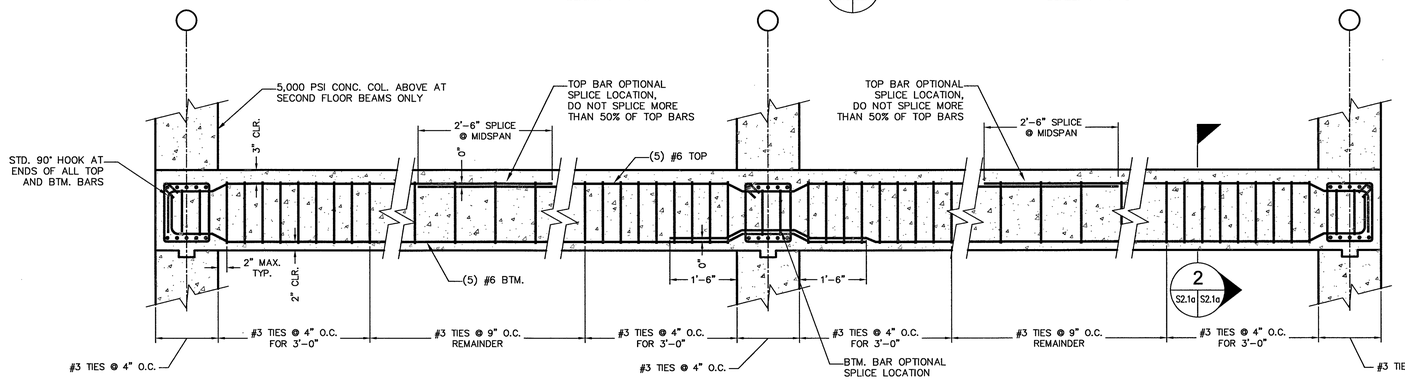

NOTE:
CONC. COL. REINF. NOT SHOWN FOR CLARITY

DETAIL TYPICAL BEAM BAR PLACING DIAGRAM
SCALE: 3/4"=1'-0"

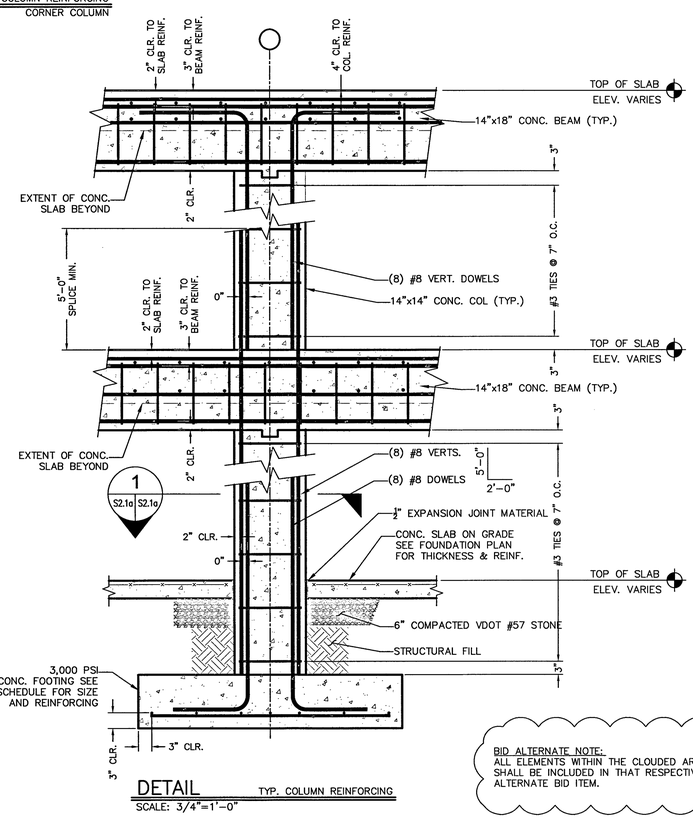

DETAIL TYP. COLUMN REINFORCING
SCALE: 3/4"=1'-0"

BID ALTERNATE NOTE:
ALL ELEMENTS WITHIN THE CLOUDED AREAS SHALL BE INCLUDED IN THAT RESPECTIVE ALTERNATE BID ITEM.

VIRGINIA DEPARTMENT OF FIRE PROGRAMS

CITY OF WINCHESTER VIRGINIA

TITLE: CONCRETE COLUMN & BEAM SECTIONS & TYPICAL DETAILS (ALTERNATE BID)

PROJECT: CITY OF WINCHESTER
BURN BUILDING
1716 WOODSTOCK LANE
WINCHESTER, VIRGINIA 22602

PAINTER-LEWIS, P.L.C.
817 CEDAR CREEK GRADE, SUITE #120
WINCHESTER, VIRGINIA 22601
TELEPHONE: (540) 662-5792
FACSIMILE: (540) 662-5793
EMAIL: office@painterlewis.com
CONSULTING ENGINEERS

REVISIONS

NO.	DATE

COMMONWEALTH OF VIRGINIA
TIMOTHY G. PAINTER
Lic. No. 018260
08/15/16
PROFESSIONAL ENGINEER

DRAWN BY: RJD
JOB NO.: 1511018
DATE: 08-15-2016
SCALE: AS NOTED
SHEET: S2.1a

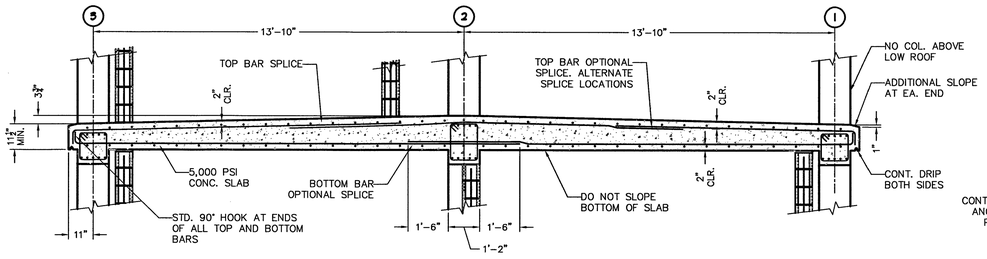

SECTION — SECOND FLOOR SLAB — G (S1.1 | S2.2)
SCALE: 3/8"=1'-0"

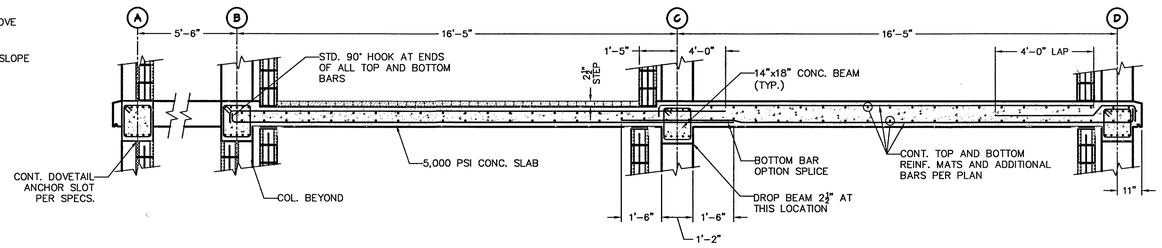

SECTION — SECOND FLOOR SLAB — H (S1.1 | S2.2)
SCALE: 3/8"=1'-0"

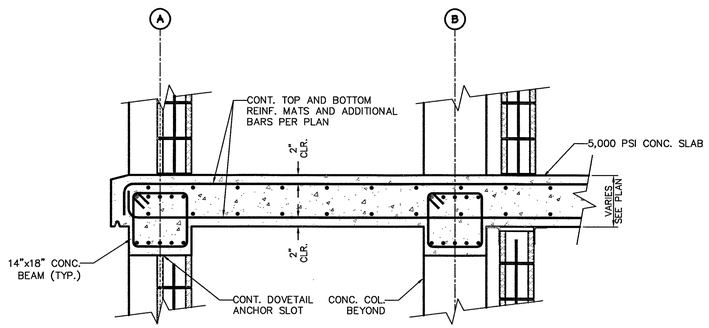

SECTION — SECOND FLOOR STAIR LANDING — J (S1.1 | S2.2)
SCALE: 3/4"=1'-0"

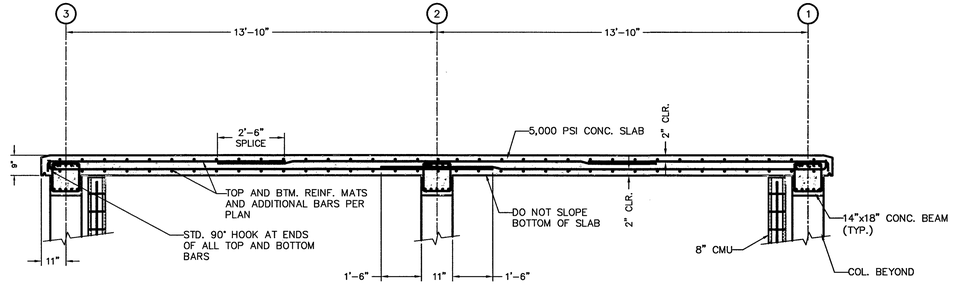

SECTION — ROOF SLAB — K (S1.1 | S2.2)
SCALE: 3/8"=1'-0"

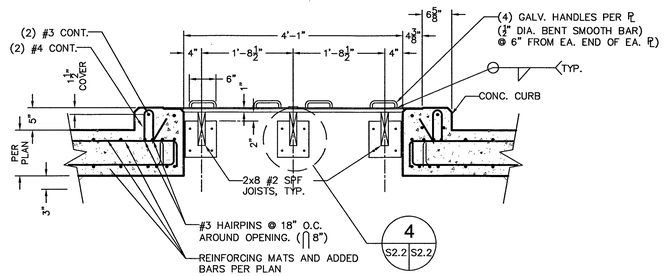

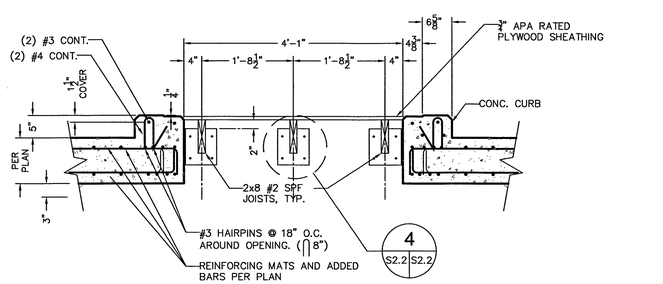

DETAIL — CHOP OUT OPENING — 3 (S2.2)
SCALE: 3/4"=1'-0"
S1.1,S2.2

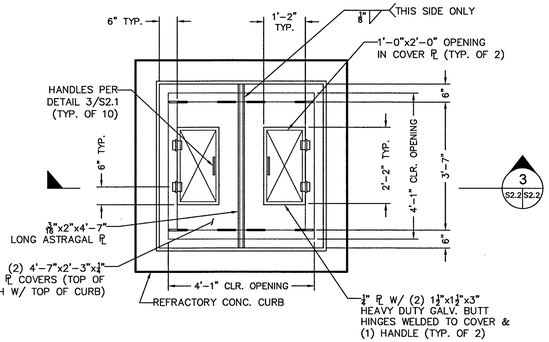

DETAIL — CHOP OUT OPENING COVER
SCALE: 1/2"=1'-0"

NOTES:
1. SLAB THICKNESS SHALL BE 9" THICK MINIMUM WHERE FIREBRICK IS PRESENT & 11½" THICK MINIMUM WHERE NO FIREBRICK IS TO BE INSTALLED. SLOPE TOP SURFACES ONLY.
2. SLAB REINFORCING SHALL BE #5 AT 10" O.C. CONTINUOUS BOTH WAYS TOP AND BOTTOM, INCLUDING INTERIOR STAIR LANDING.
3. OUTERMOST REINFORCING LAYERS SHALL BE IN THIS DIRECTION IN PLAN: ⟷
4. SEE PLAN FOR ADDITIONAL REINFORCING.
5. SEE SHEET A1.0 FOR CONCRETE SLAB ELEVATIONS, STEPS, AND SLOPE.
6. HOOK ENDS OF ALL TOP AND BTM. BARS THAT END AT EDGE OF SLAB OR OPENING.
7. CAST SCUPPER AND DOORWAY WELD PLATES INTO SLAB PER FLOOR PLAN DWG1, SHEET A2.1 AND DETAILS.
8. TOP SURFACE OF EXTERIOR FLAT ROOF SHALL BE SEALED WITH A CEMENTITIOUS COATING SUCH AS SIKATOP SEAL 107.

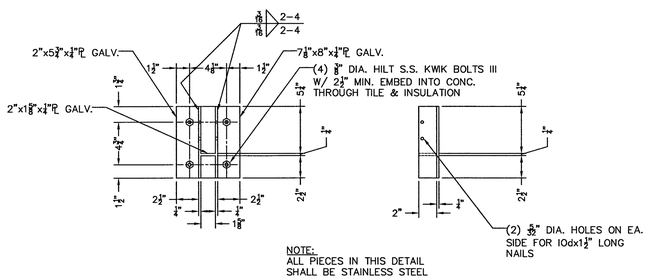

NOTE:
ALL PIECES IN THIS DETAIL SHALL BE STAINLESS STEEL

DETAIL — 2x8 HANGER — 4 (S2.2 | S2.2)
SCALE: 1 1/2"=1'-0"

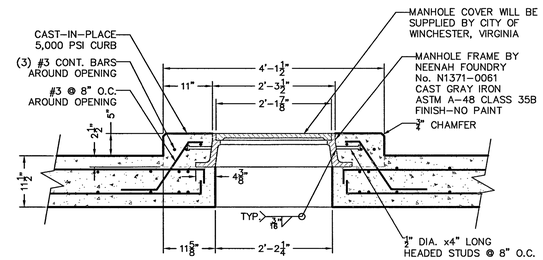

DETAIL — MANHOLE — 5 (S1.1 | S2.2)
SCALE: 3/4"=1'-0"

PROJECT:
CITY OF WINCHESTER
BURN BUILDING
1716 WOODSTOCK LANE
WINCHESTER, VIRGINIA 22602

PAINTER-LEWIS, P.L.C.
817 CEDAR CREEK GRADE, SUITE #120
WINCHESTER, VIRGINIA 22601
TELEPHONE: (540) 662-5792
FACSIMILE: (540) 662-5793
EMAIL: office@painterlewis.com
CONSULTING ENGINEERS

TITLE:
CONCRETE SLAB SECTIONS, MANHOLE & CHOPOUT SECTIONS & DETAILS (BASE BID)

REVISIONS

NO.	DATE

COMMONWEALTH OF VIRGINIA — TIMOTHY G. PAINTER — Lic. No. 018260 — PROFESSIONAL ENGINEER — 08/15/16

DRAWN BY: RJD
JOB NO.: 1511018
DATE: 08-15-2016
SCALE: AS NOTED
SHEET: S2.2

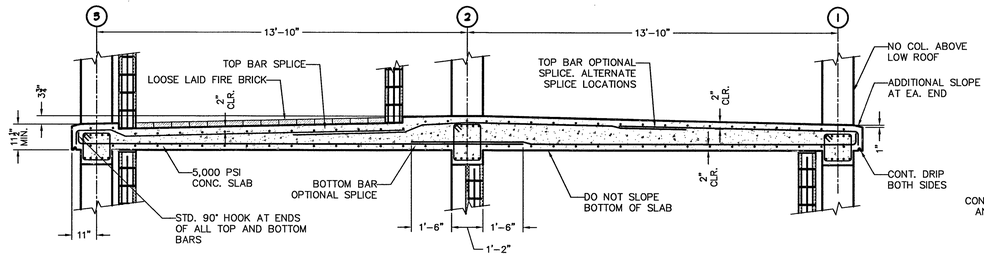

SECTION — SECOND FLOOR SLAB — G (S1.1a | S2.2a)
SCALE: 3/8"=1'-0"

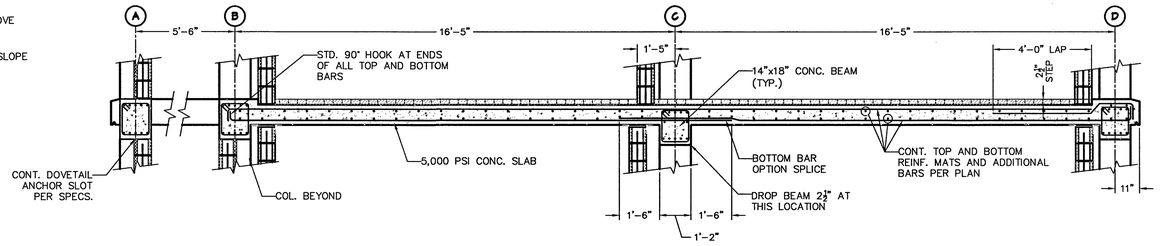

SECTION — SECOND FLOOR SLAB — H (S1.1a | S2.2a)
SCALE: 3/8"=1'-0"

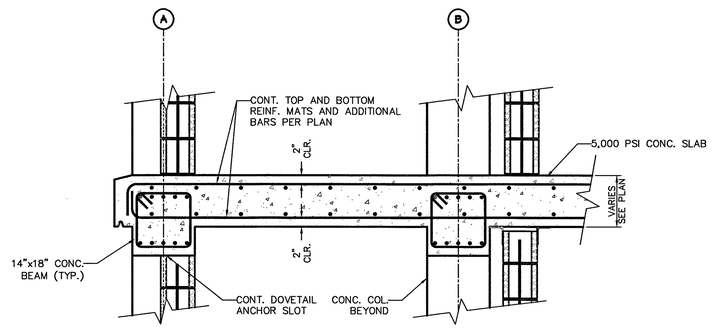

SECTION — SECOND FLOOR STAIR LANDING — J (S1.1a | S2.2a)
SCALE: 3/4"=1'-0"

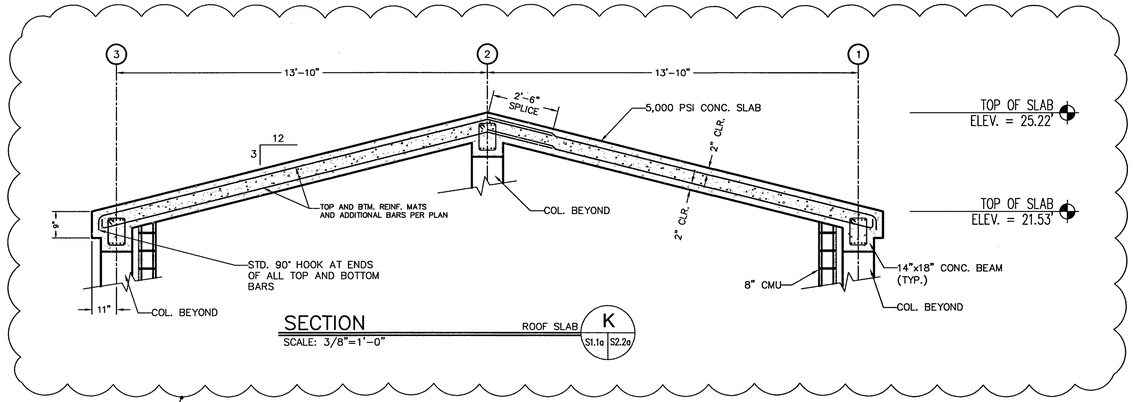

SECTION — ROOF SLAB — K (S1.1a | S2.2a)
SCALE: 3/8"=1'-0"

BID ALTERNATE NOTE:
ALL ELEMENTS WITHIN THE CLOUDED AREAS SHALL BE INCLUDED IN THAT RESPECTIVE ALTERNATE BID ITEM.

ROOF PITCH (BID ALTERNATE)

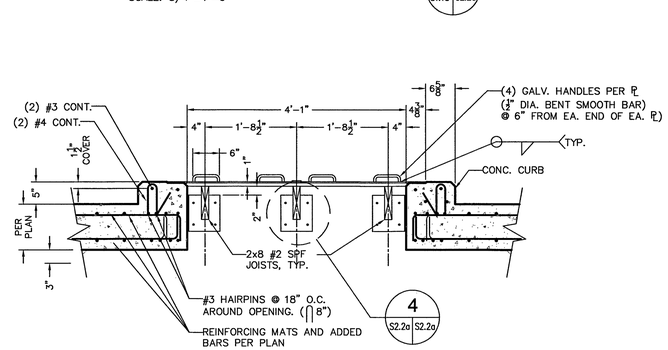

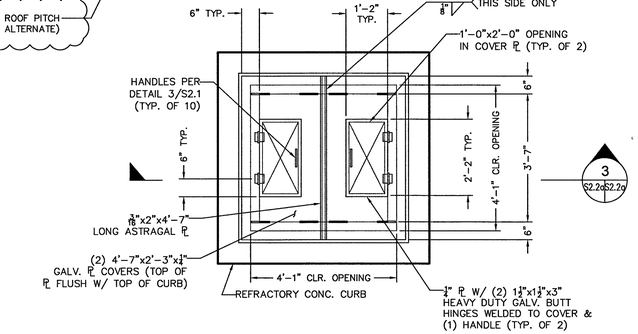

NOTES:
1. SLAB THICKNESS SHALL BE 9" THICK MINIMUM WHERE FIREBRICK IS PRESENT & 11½" THICK MINIMUM WHERE NO FIREBRICK IS TO BE INSTALLED. SLOPE TOP SURFACES ONLY.
2. SLAB REINFORCING SHALL BE #5 AT 10" O.C. CONTINUOUS BOTH WAYS TOP AND BOTTOM, INCLUDING INTERIOR STAIR LANDING.
3. OUTERMOST REINFORCING LAYERS SHALL BE IN THIS DIRECTION IN PLAN: ⟷
4. SEE PLAN FOR ADDITIONAL REINFORCING.
5. SEE SHEET A1.0 FOR CONCRETE SLAB ELEVATIONS, STEPS, AND SLOPE.
6. HOOK ENDS OF ALL TOP AND BTM. BARS THAT END AT EDGE OF SLAB OR OPENING.
7. CAST SCUPPER AND DOORWAY WELD PLATES INTO SLAB PER FLOOR PLAN DWG1, SHEET A2.1 AND DETAILS.
8. TOP SURFACE OF EXTERIOR FLAT ROOF SHALL BE SEALED WITH A CEMENTITIOUS COATING SUCH AS SIKATOP SEAL 107.

DETAIL — CHOP OUT OPENING COVER
SCALE: 1/2"=1'-0"

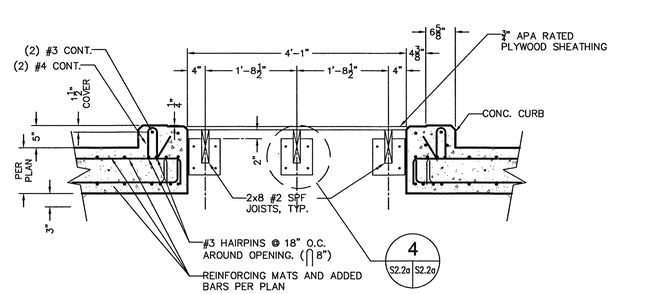

DETAIL — CHOP OUT OPENING — 3 (S2.2a; S1.1a,S2.2a)
SCALE: 3/4"=1'-0"

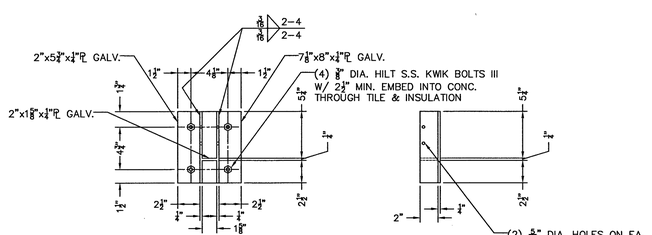

NOTE:
ALL PIECES IN THIS DETAIL SHALL BE STAINLESS STEEL

DETAIL — 2x8 HANGER — 4 (S2.2a | S2.2a)
SCALE: 1 1/2"=1'-0"

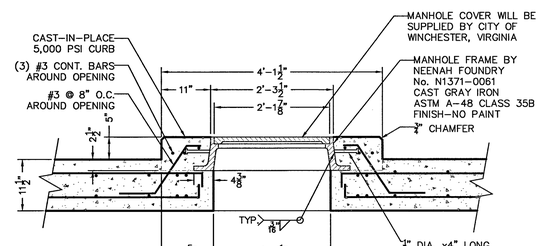

DETAIL — MANHOLE — 5 (S1.1a | S2.2a)
SCALE: 3/4"=1'-0"

VIRGINIA DEPARTMENT OF FIRE PROGRAMS

CITY OF WINCHESTER, PARE PAC, 1871, VIRGINIA

TITLE: CONCRETE SLAB SECTIONS, MANHOLE & CHOPOUT SECTIONS & DETAILS (ALTERNATE BID)

PROJECT:
CITY OF WINCHESTER
BURN BUILDING
1716 WOODSTOCK LANE
WINCHESTER, VIRGINIA 22602

PAINTER-LEWIS, P.L.C.
817 CEDAR CREEK GRADE, SUITE #120
WINCHESTER, VIRGINIA 22601
TELEPHONE: (540) 662-5792
FACSIMILE: (540) 662-5793
EMAIL: office@painterlewis.com
CONSULTING ENGINEERS

REVISIONS

NO.	DATE

COMMONWEALTH OF VIRGINIA
TIMOTHY C. PAINTER
Lic. No. 018260
08/15/16
PROFESSIONAL ENGINEER

DRAWN BY: RJD
JOB NO.: 1511018
DATE: 08-15-2016
SCALE: AS NOTED
SHEET: S2.2a

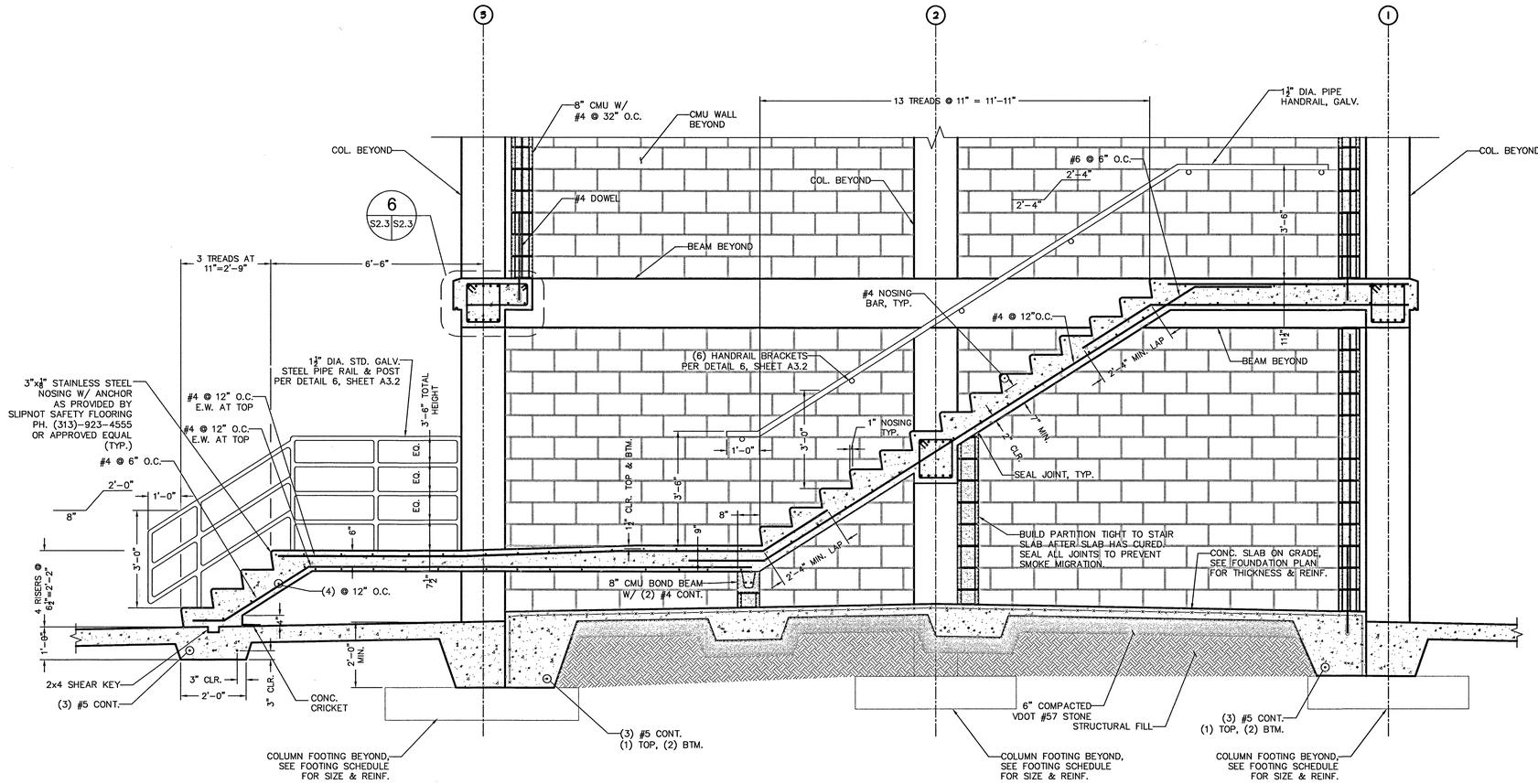

SECTION L — S1.1a,S2.3 — SCALE: 1/2"=1'-0"

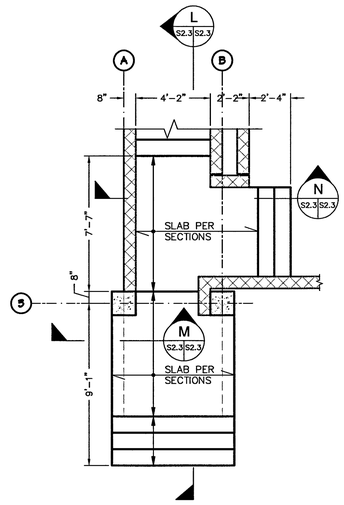

PARTIAL FRAMING PLAN — LOWER STAIR LANDING
SCALE: 1/4"=1'-0"

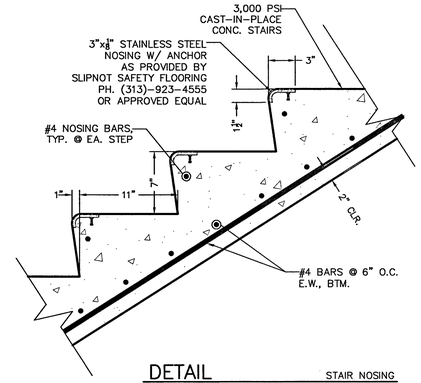

DETAIL — STAIR NOSING
SCALE: 1 1/2"=1'-0"

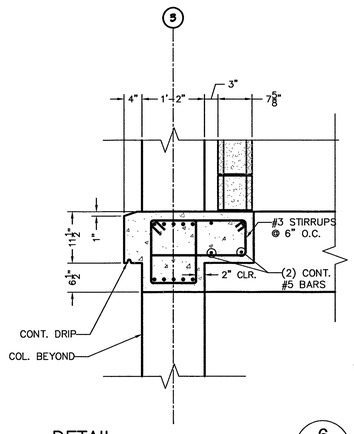

DETAIL — BEAM 6 S2.3 S2.3
SCALE: 3/4"=1'-0"

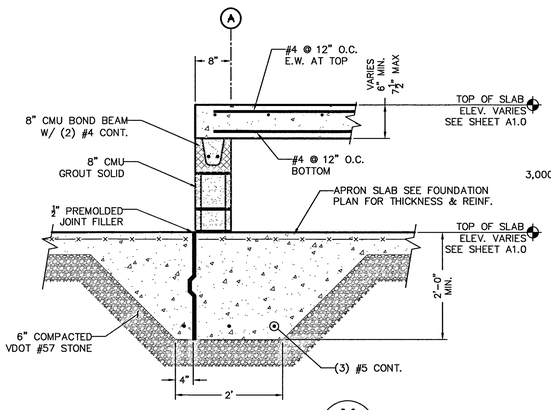

SECTION — LOW STAIR LANDING M S2.3 S2.3
SCALE: 3/4"=1'-0"

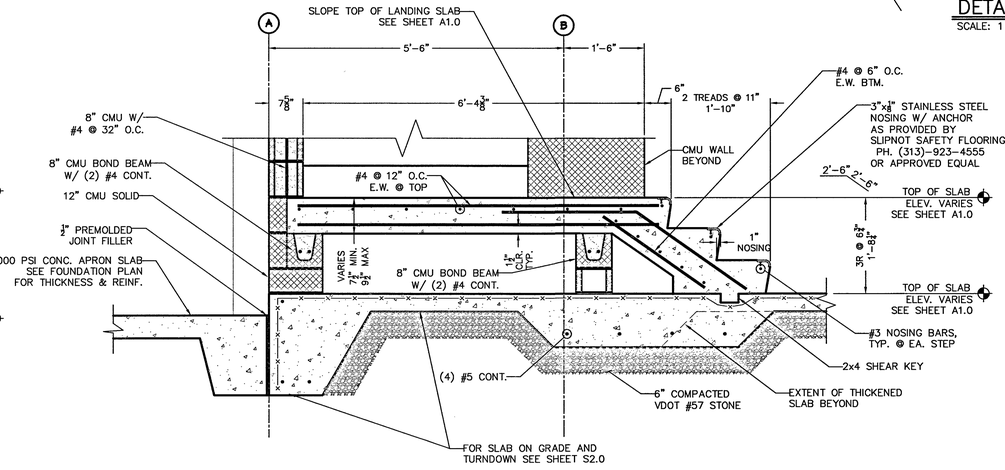

SECTION — LOW STAIR LANDING N S2.3 S2.3
SCALE: 3/4"=1'-0"

VIRGINIA DEPARTMENT OF FIRE PROGRAMS

CITY OF WINCHESTER VIRGINIA FAIR PAC 1744

TITLE:
CONCRETE STAIR PLANS, SECTIONS & DETAILS (BASE BID)

PROJECT:
CITY OF WINCHESTER
BURN BUILDING
1716 WOODSTOCK LANE
WINCHESTER, VIRGINIA 22602

PAINTER-LEWIS, P.L.C.
817 CEDAR CREEK GRADE, SUITE #120
WINCHESTER, VIRGINIA 22601
TELEPHONE: (540) 662-5792
FACSIMILE: (540) 662-5793
EMAIL: office@painterlewis.com
CONSULTING ENGINEERS

REVISIONS

NO.	DATE

COMMONWEALTH OF VIRGINIA
TIMOTHY C. PAINTER
Lic. No. 018260
08/15/16
PROFESSIONAL ENGINEER

DRAWN BY: RJD
JOB NO.: 1511018
DATE: 08-15-2016
SCALE: AS NOTED
SHEET: S2.3

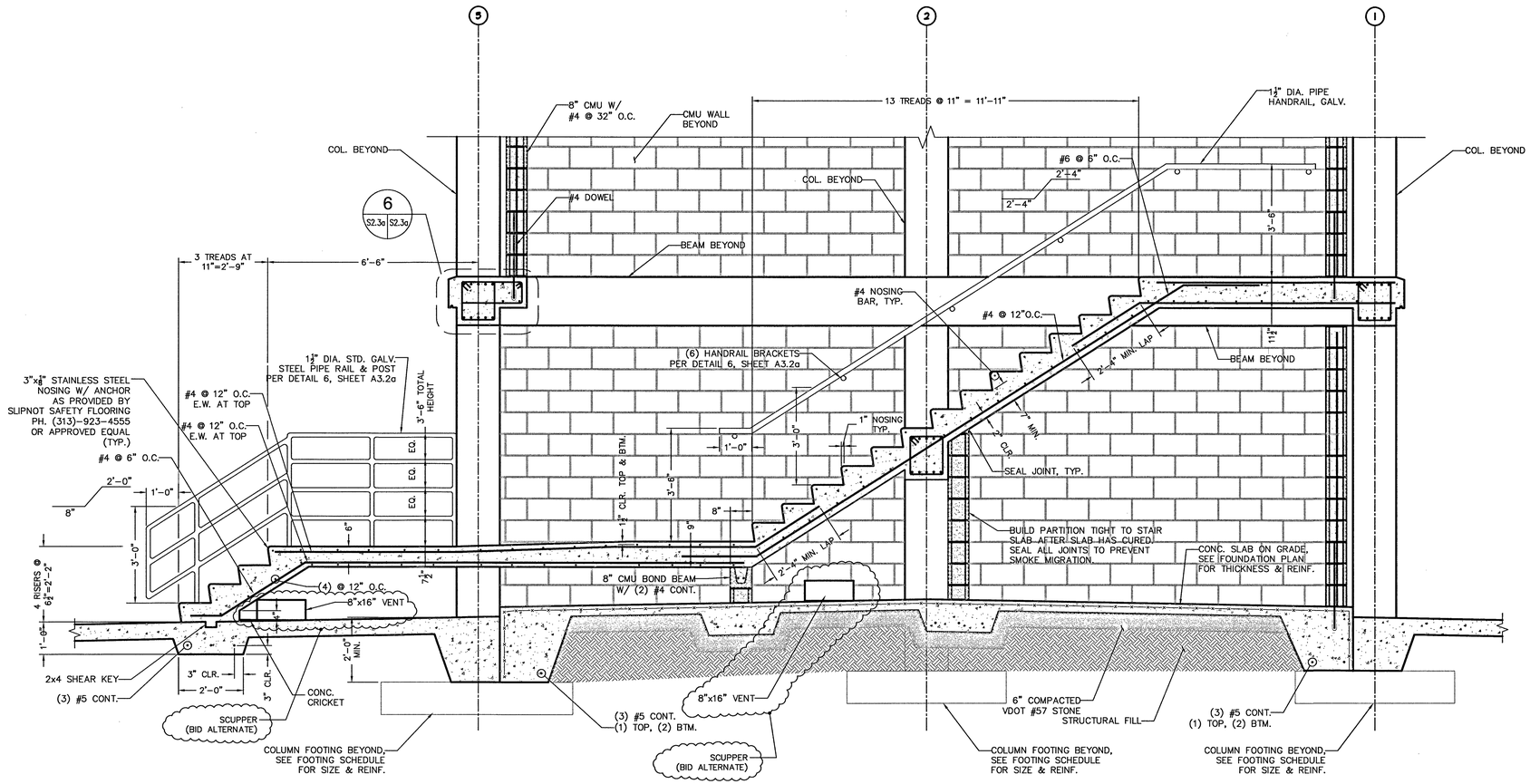

SECTION L
SCALE: 1/2"=1'-0"
S1.1a,S2.3a

BID ALTERNATE NOTE:
ALL ELEMENTS WITHIN THE CLOUDED AREAS SHALL BE INCLUDED IN THAT RESPECTIVE ALTERNATE BID ITEM.

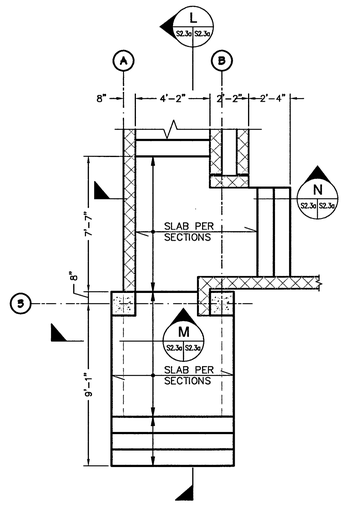

PARTIAL FRAMING PLAN LOWER STAIR LANDING
SCALE: 1/4"=1'-0"

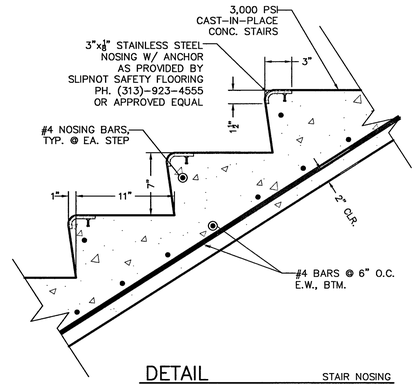

DETAIL STAIR NOSING
SCALE: 1 1/2"=1'-0"

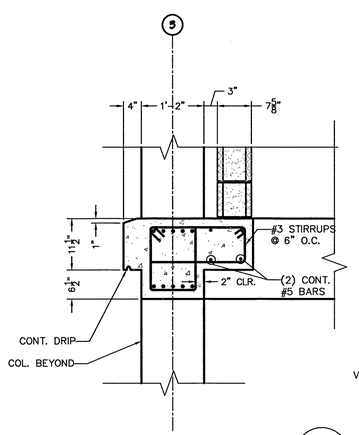

DETAIL BEAM 6
SCALE: 3/4"=1'-0"
S2.3a S2.3a

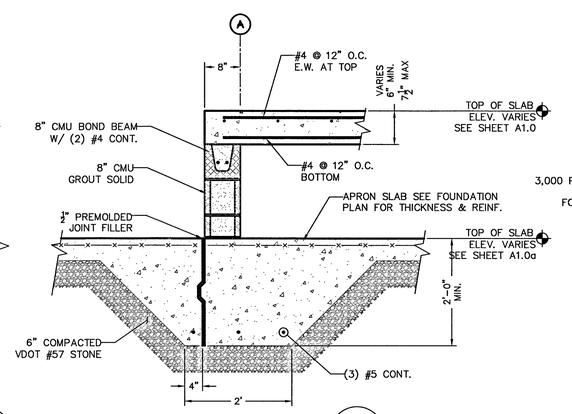

SECTION LOW STAIR LANDING M
SCALE: 3/4"=1'-0"
S2.3a S2.3a

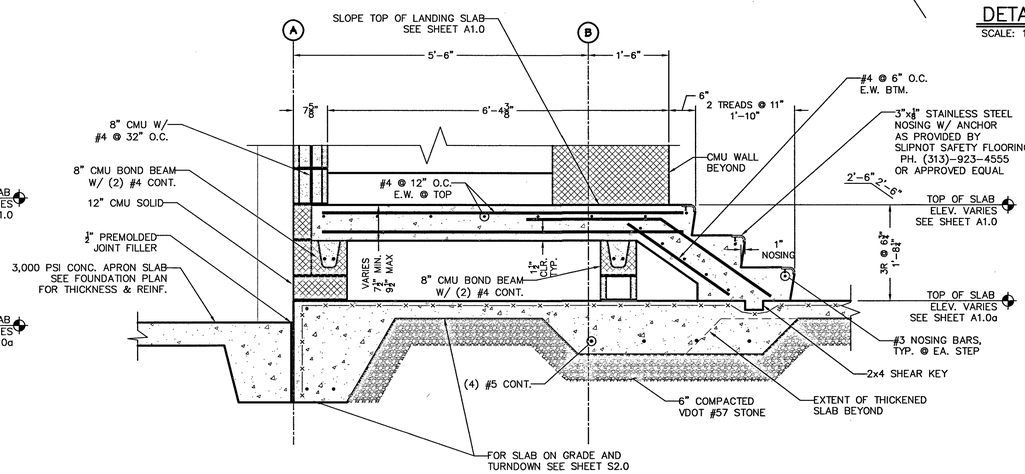

SECTION LOW STAIR LANDING N
SCALE: 3/4"=1'-0"
S2.3a S2.3a

VIRGINIA DEPARTMENT OF FIRE PROGRAMS

CITY OF WINCHESTER VIRGINIA

TITLE:
CONCRETE STAIR PLANS, SECTIONS & DETAILS (ALTERNATE BID)

PROJECT:
CITY OF WINCHESTER
BURN BUILDING
1716 WOODSTOCK LANE
WINCHESTER, VIRGINIA 22602

PAINTER-LEWIS, P.L.C.
817 CEDAR CREEK GRADE, SUITE #120
WINCHESTER, VIRGINIA 22601
TELEPHONE: (540) 662-5792
FACSIMILE: (540) 662-5793
EMAIL: office@painterlewis.com
CONSULTING ENGINEERS

REVISIONS

NO.	DATE

COMMONWEALTH OF VIRGINIA
TIMOTHY C. PAINTER
Lic. No. 018260
05/15/16
PROFESSIONAL ENGINEER

DRAWN BY: RJD
JOB NO.: 1511018
DATE: 08-15-2016
SCALE: AS NOTED
SHEET: S2.3a

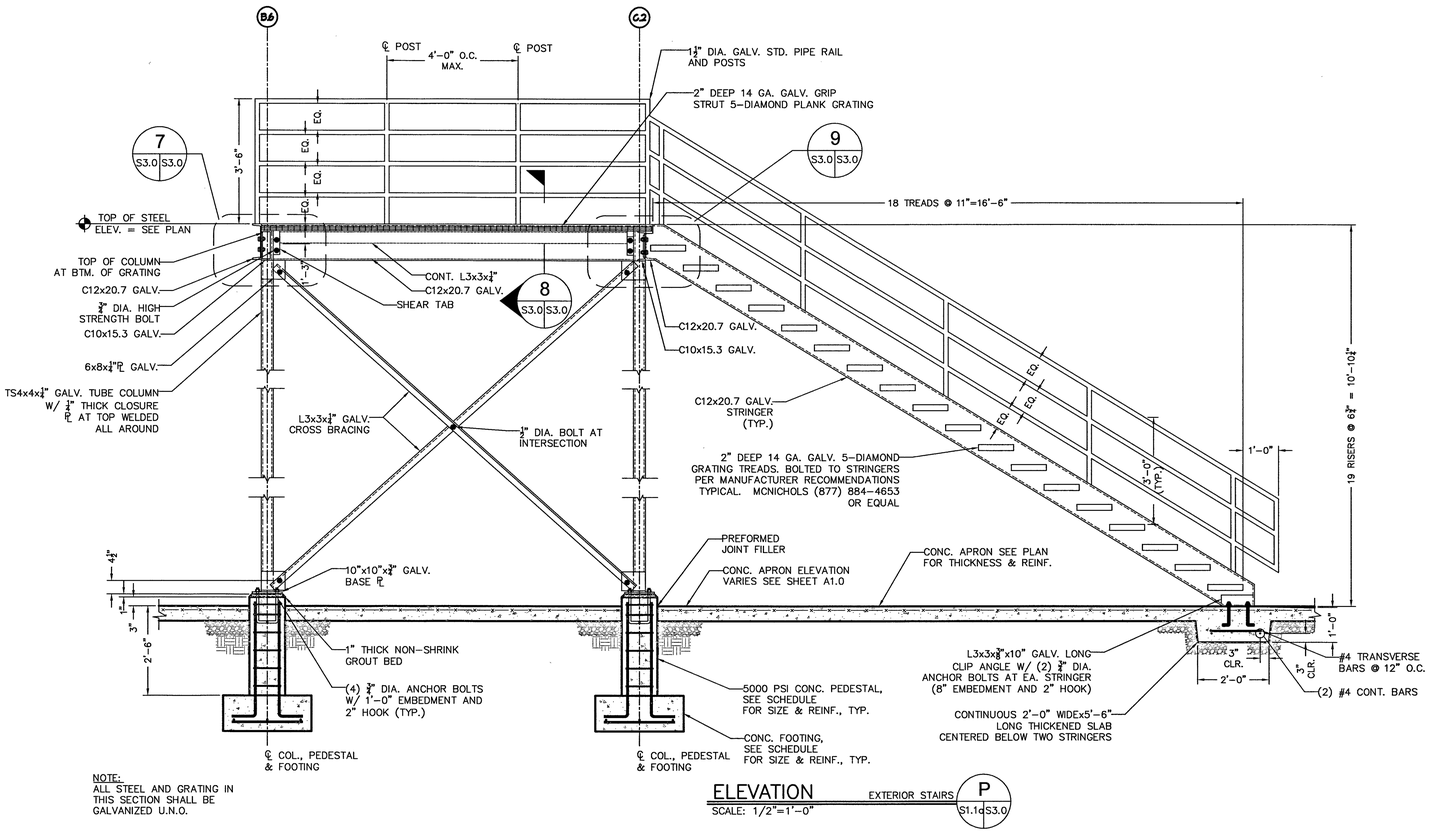

NOTE:
ALL STEEL AND GRATING IN THIS SECTION SHALL BE GALVANIZED U.N.O.

ELEVATION — EXTERIOR STAIRS — P — S1.1 & S3.0
SCALE: 1/2"=1'-0"

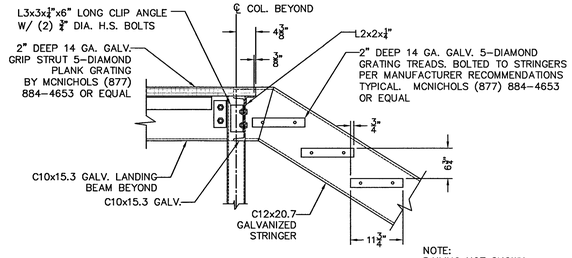

DETAIL — 9 — S3.0 S3.0
SCALE: 3/4"=1'-0"

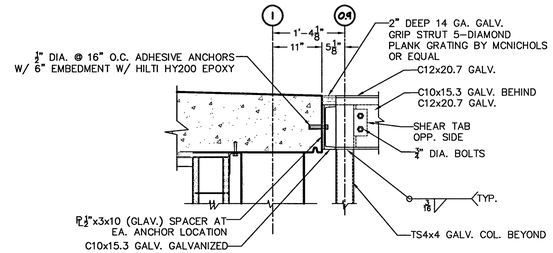

SECTIONS — Q — S1.1 & S3.0
SCALE: 3/4"=1'-0"

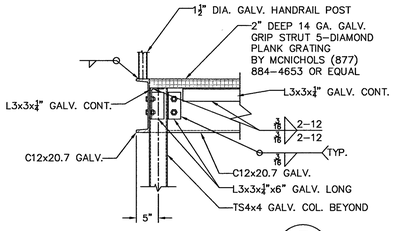

DETAIL — 7 — S3.0 S3.0
SCALE: 3/4"=1'-0"

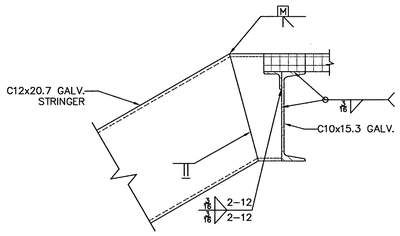

DETAILS — STAIR STRINGER SPLICE & CONNECTION
SCALE: 1 1/2"=1'-0"

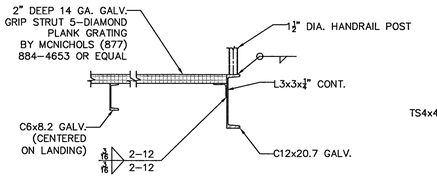

DETAIL — 8 — S3.0 — S3.0,S3.2
SCALE: 3/4"=1'-0"

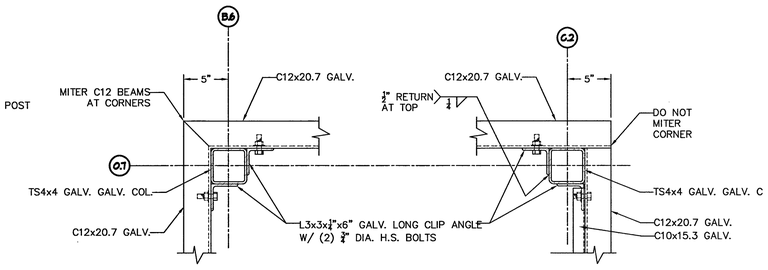

DETAILS — LANDING BEAMS TO COLUMNS
SCALE: 1 1/2"=1'-0"

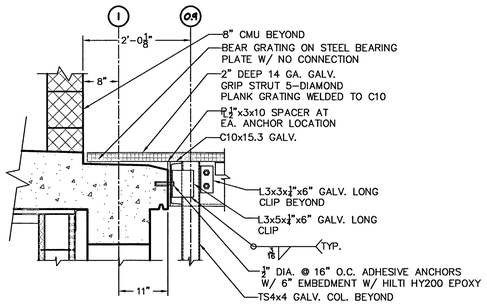

SECTIONS — GRATING PLANK CONNECTION — R — S1.1 & S3.0
SCALE: 3/4"=1'-0"

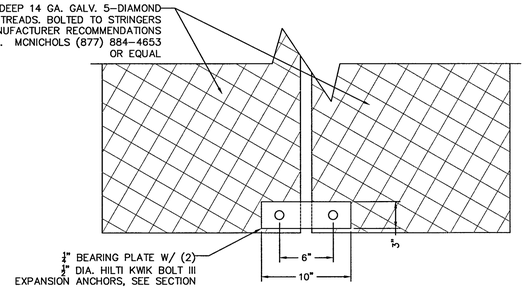

DETAILS — GRATING PLANK CONNECTION
SCALE: 1 1/2"=1'-0"

VIRGINIA DEPARTMENT OF FIRE PROGRAMS

CITY OF WINCHESTER VIRGINIA

TITLE:
EXTERIOR STEEL STAIR ELEVATION, SECTIONS & DETAILS (BASE BID)

PROJECT:
CITY OF WINCHESTER
BURN BUILDING
1716 WOODSTOCK LANE
WINCHESTER, VIRGINIA 22602

PAINTER-LEWIS, P.L.C.
817 CEDAR CREEK GRADE, SUITE #120
WINCHESTER, VIRGINIA 22601
TELEPHONE: (540) 662-5792
FACSIMILE: (540) 662-5793
EMAIL: office@painterlewis.com
CONSULTING ENGINEERS

REVISIONS

NO.	DATE

COMMONWEALTH OF VIRGINIA
TIMOTHY G. PAINTER
Lic. No. 018260
08/15/16
PROFESSIONAL ENGINEER

DRAWN BY: RJD
JOB NO.: 1511018
DATE: 08-15-2016
SCALE: AS NOTED
SHEET: S3.0

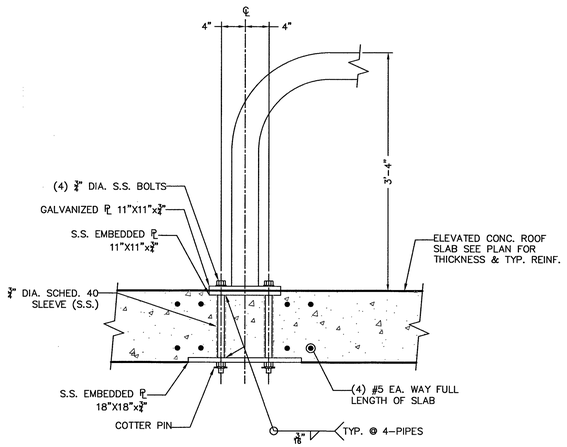

DETAILS RAPPELLING TIE-OFF BAR ALTERNATE

SCALE: 1"=1'-0"

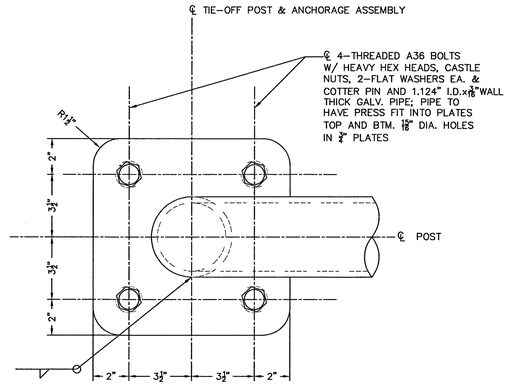

DETAILS RAPPELLING TIE-OFF BAR ALTERNATE

SCALE: 3"=1'-0"

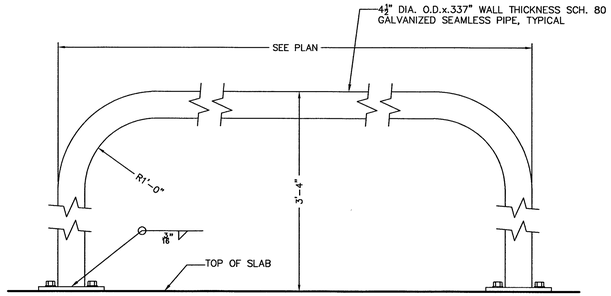

NOTE:
SEE PLANS FOR ALL LAYOUT DIMENSIONS

DETAILS RAPPELLING TIE-OFF BAR ALTERNATE

SCALE: 1"=1'-0"

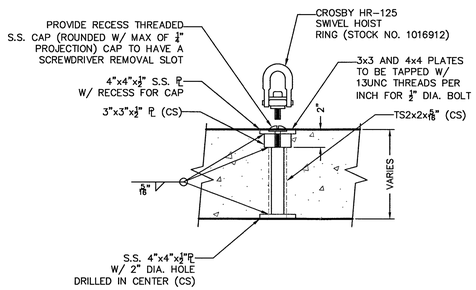

DETAILS RAPPEL RING

SCALE: 1 1/2"=1'-0"

TITLE:
RAPPELLING BAR
ELEVATION & DETAILS

PROJECT:
CITY OF WINCHESTER
BURN BUILDING
1716 WOODSTOCK LANE
WINCHESTER, VIRGINIA 22602

PAINTER-LEWIS, P.L.C.
817 CEDAR CREEK GRADE, SUITE #120
WINCHESTER, VIRGINIA 22601
TELEPHONE: (540) 662-5792
FACSIMILE: (540) 662-5793
EMAIL: office@painterlewis.com
CONSULTING ENGINEERS

REVISIONS

NO.	DATE

COMMONWEALTH OF VIRGINIA
TIMOTHY G. PAINTER
Lic. No. 018260
08/15/16
PROFESSIONAL ENGINEER

DRAWN BY: RJD
JOB NO.: 1511018

DATE: 08-15-2016

SCALE: AS NOTED

SHEET: S3.1

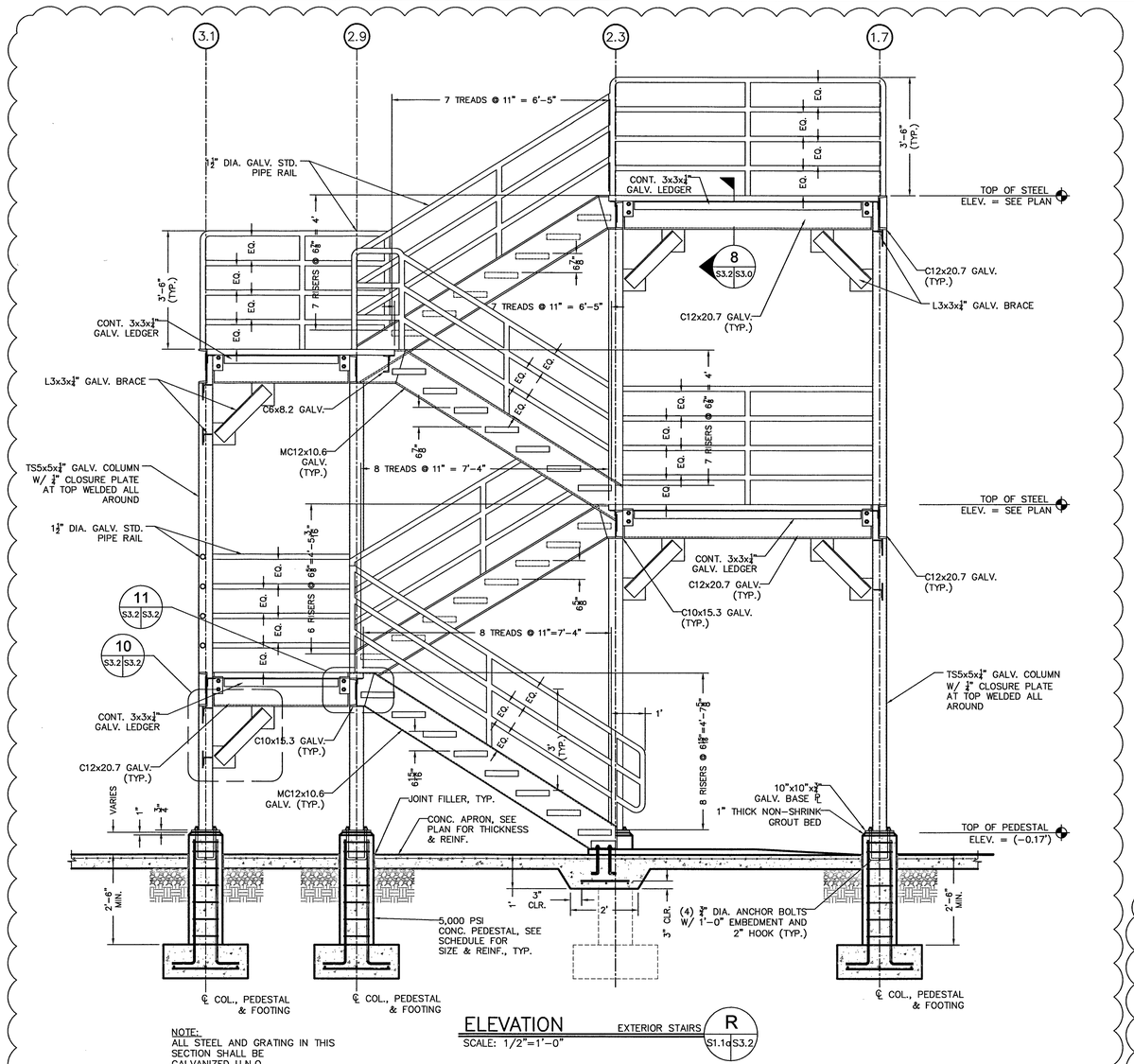

ELEVATION — EXTERIOR STAIRS (R / S1.1c S3.2)
SCALE: 1/2"=1'-0"

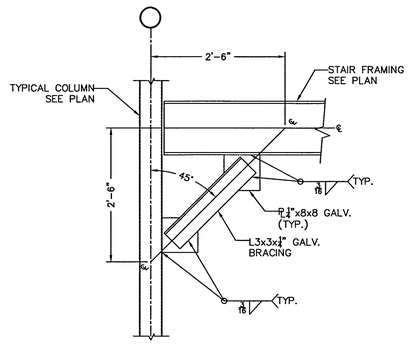

DETAIL (10 / S1.1c S3.2)
SCALE: 3/4"=1'-0"

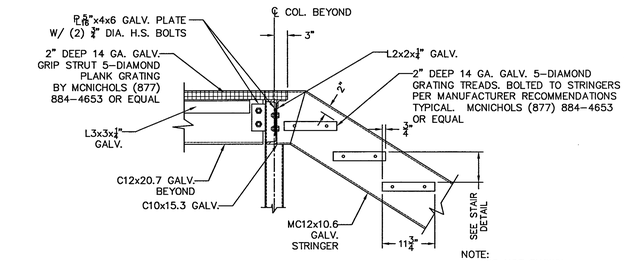

DETAIL (11 / S3.2 S3.2)
SCALE: 3/4"=1'-0"

STAIR 1a (BID ALTERNATE)

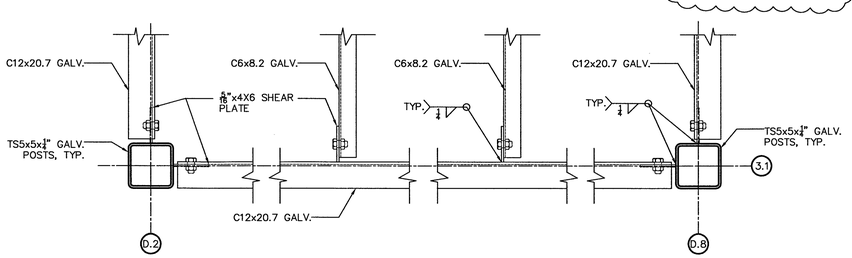

DETAIL — LANDING BEAMS TO COLUMNS
SCALE: 1 1/2"=1'-0"

STAIR 2a BID ALTERNATE

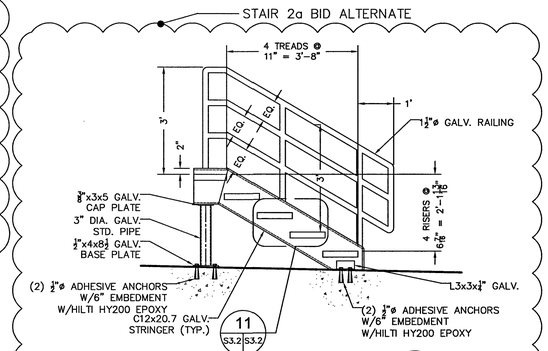

ELEVATION — ROOF STAIRS (S / S1.1c S3.2)
SCALE: 1/2"=1'-0"

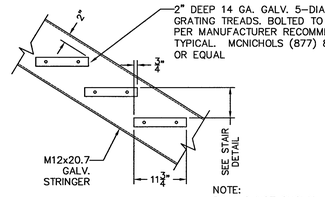

DETAIL (12 / S3.2 S3.2)
SCALE: 3/4"=1'-0"

BID ALTERNATE NOTE:
ALL ELEMENTS WITHIN THE CLOUDED AREAS SHALL BE INCLUDED IN THAT RESPECTIVE ALTERNATE BID ITEM.

TITLE:
EXTERIOR STEEL STAIR ELEVATION, SECTIONS & DETAILS (ALTERNATE BID)

PROJECT:
CITY OF WINCHESTER
BURN BUILDING
1716 WOODSTOCK LANE
WINCHESTER, VIRGINIA 22602

PAINTER-LEWIS, P.L.C.
817 CEDAR CREEK GRADE, SUITE #120
WINCHESTER, VIRGINIA 22601
TELEPHONE: (540) 662-5792
FACSIMILE: (540) 662-5793
EMAIL: office@painterlewis.com
CONSULTING ENGINEERS

REVISIONS

NO.	DATE

COMMONWEALTH OF VIRGINIA
TIMOTHY G. PAINTER
Lic. No. 018260
08/15/16
PROFESSIONAL ENGINEER

DRAWN BY: RJD
JOB NO.: 1511018
DATE: 08-15-2016
SCALE: AS NOTED
SHEET: S3.2a

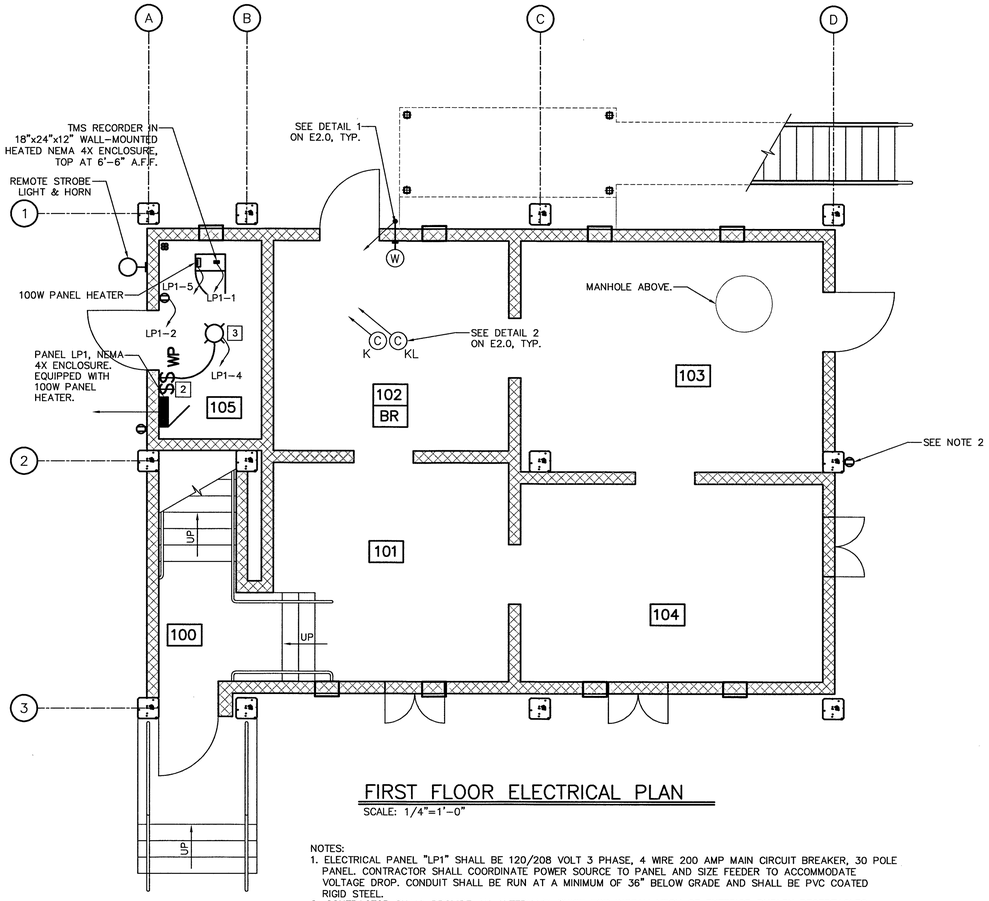

FIRST FLOOR ELECTRICAL PLAN

SCALE: 1/4"=1'-0"

NOTES:
1. ELECTRICAL PANEL "LP1" SHALL BE 120/208 VOLT 3 PHASE, 4 WIRE 200 AMP MAIN CIRCUIT BREAKER, 30 POLE PANEL. CONTRACTOR SHALL COORDINATE POWER SOURCE TO PANEL AND SIZE FEEDER TO ACCOMMODATE VOLTAGE DROP. CONDUIT SHALL BE RUN AT A MINIMUM OF 36" BELOW GRADE AND SHALL BE PVC COATED RIGID STEEL.
2. CONTRACTOR SHALL PROVIDE AN ALTERNATE PRICE FOR INSTALLATION OF EXTERIOR DUPLEX RECEPTACLES. RECEPTACLES SHALL BE RECESSED MOUNTED. PROVIDE CAST IRON RECEPTACLE BOX WITH DIE CAST ALUMINUM COVER PLATE. DUPLEX RECEPTACLE SHALL BE WEATHER-RESISTANT HEAVY DUTY TYPE.
3. ALL ELECTRICAL FIXTURES SHALL BE G.F.C.I.
4. ALL WIRING SHALL COMPLY WITH THE APPLICABLE NATIONAL, STATE, AND LOCAL ELECTRICAL CODES. USE MINIMUM OF #12 AWG CU THHN IN 1/2 INCH RIGID STEEL CONDUITS.
5. ALL HORIZONTAL CONDUIT FOR CEILING MOUNTED AND WALL MOUNTED THERMOCOUPLES SHALL BE LOCATED AT THE CENTER OF THE SECOND FLOOR SLAB.

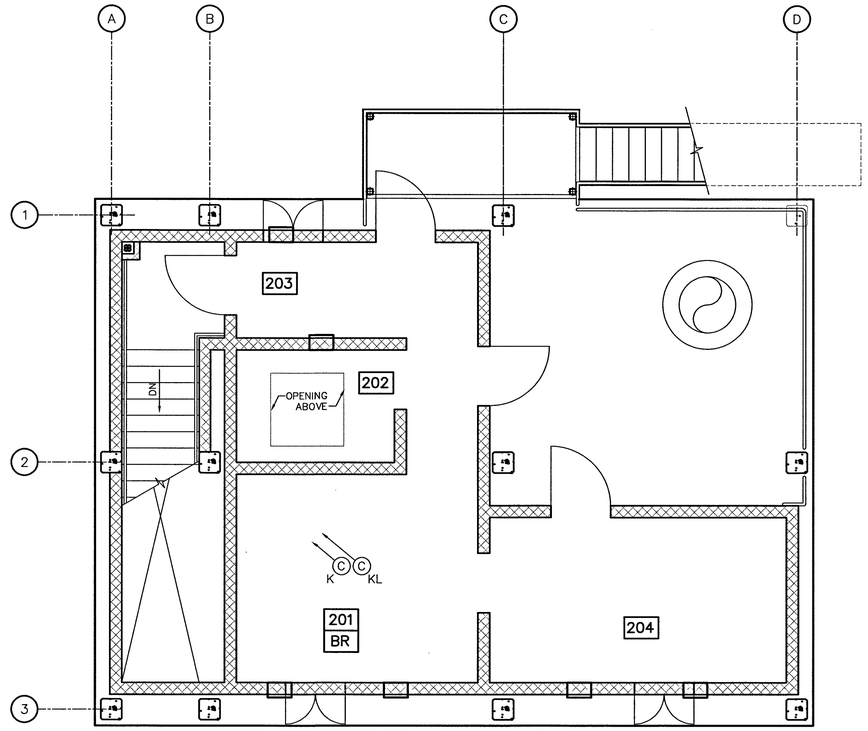

SECOND FLOOR ELECTRICAL PLAN

SCALE: 1/4"=1'-0"

NOTE:
1. ALL HORIZONTAL CONDUIT FOR CEILING MOUNTED AND WALL MOUNTED THERMOCOUPLES SHALL BE LOCATED AT THE CENTER OF THE HIGH ROOF SLAB.

ABBREVIATIONS:

A.	AMPERE (S)
A.F.F.	ABOVE FINISHED FLOOR
A.I.C.	AMPERE INTERRUPTING CAPACITY
AWG	AMERICAN WIRE GAUGE
G.F.I.	GROUND FAULT INTERRUPT
GND	GROUND
MCB	MAIN CIRCUIT BREAKER
$WP	WEATHERPROOF SINGLE POLE 20 AMP SWITCH. SURFACE MOUNTED, 42" MOUNTING HEIGHT A.F.F.
T.L.	THERMAL LINING
T.M.S.	TEMPERATURE MONITORING SYSTEM
V	VOLT (S)
W	WATT
WP	WEATHERPROOF (NEMA 4X)

SYMBOLS:

	WEATHERPROOF CEILING MOUNTED LED CANOPY LIGHT.
	WEATHERPROOF DUPLEX RECEPTACLE, 20A, 125V, GFCI GROUNDING TYPE, HAVING NEMA TYPE 5-20 R CONFIGURATION, SURFACE MOUNTED, 18" MOUNTING HEIGHT A.F.F.
J	JUNCTION BOX
	CONDUIT TURNED UP
	CONDUIT TURNED DOWN
	CONDUIT RUN TO RECORDER FOR TEMPERATURE MONITORING SYSTEM U.O.N.
W	WALL-MOUNTED TYPE K DUPLEX THERMOCOUPLE, 60" A.F.F. SEE DETAIL 1/E2.0
K C	RECESSED CEILING-MOUNTED TYPE K DUPLEX THERMOCOUPLE, SEE DETAIL 2/E2.0
KL C	RECESSED CEILING-MOUNTED TYPE K DUPLEX THERMOCOUPLE PLACED BEHIND INSULATION OF THERMAL LINING, SEE DETAIL 2/E2.0
M	EXISTING METER
	BRANCH CIRCUIT WITH 2 #12 AWG + GROUND WIRE, U.O.N., RUN EXPOSED TO PANELBOARD
	CONNECTION POINT
	REMOTE STROBE LIGHT AND HORN
$WP	WATERPROOF SWITCH
	WALL MOUNTED FLOOD LIGHT

VIRGINIA DEPARTMENT OF FIRE PROGRAMS

CITY OF WINCHESTER VIRGINIA

TITLE:
ELECTRICAL PLANS, ABBREVIATIONS & SYMBOLS (BASE BID)

PROJECT:
CITY OF WINCHESTER
BURN BUILDING
1716 WOODSTOCK LANE
WINCHESTER, VIRGINIA 22602

PAINTER-LEWIS, P.L.C.
817 CEDAR CREEK GRADE, SUITE #120
WINCHESTER, VIRGINIA 22601
TELEPHONE: (540) 662-5792
FACSIMILE: (540) 662-5793
EMAIL: office@painterlewis.com
CONSULTING ENGINEERS

REVISIONS

NO.	DATE

COMMONWEALTH OF VIRGINIA
M. Howell
MICHAEL F. HOWELL
No. 008875
25 APR 2016
PROFESSIONAL ENGINEER

DRAWN BY: RJD
JOB NO.: 1511018
DATE: 08-15-2016
SCALE: AS NOTED
SHEET: E1.0

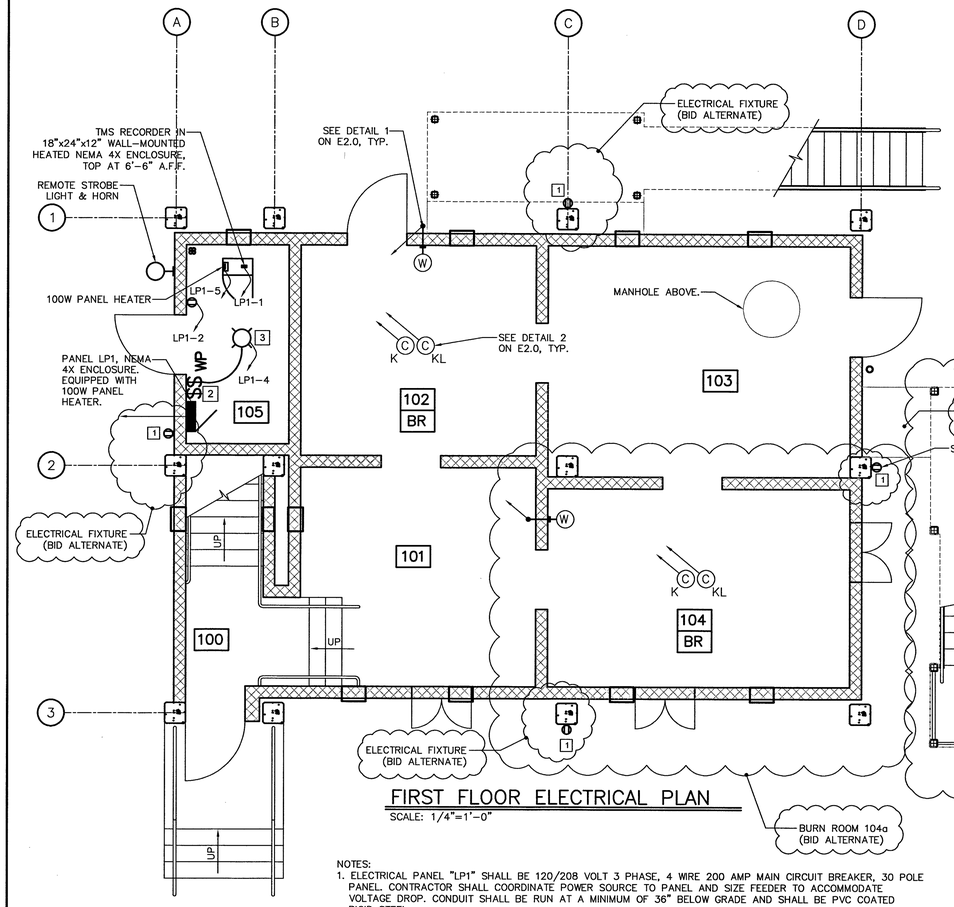

FIRST FLOOR ELECTRICAL PLAN

SCALE: 1/4"=1'-0"

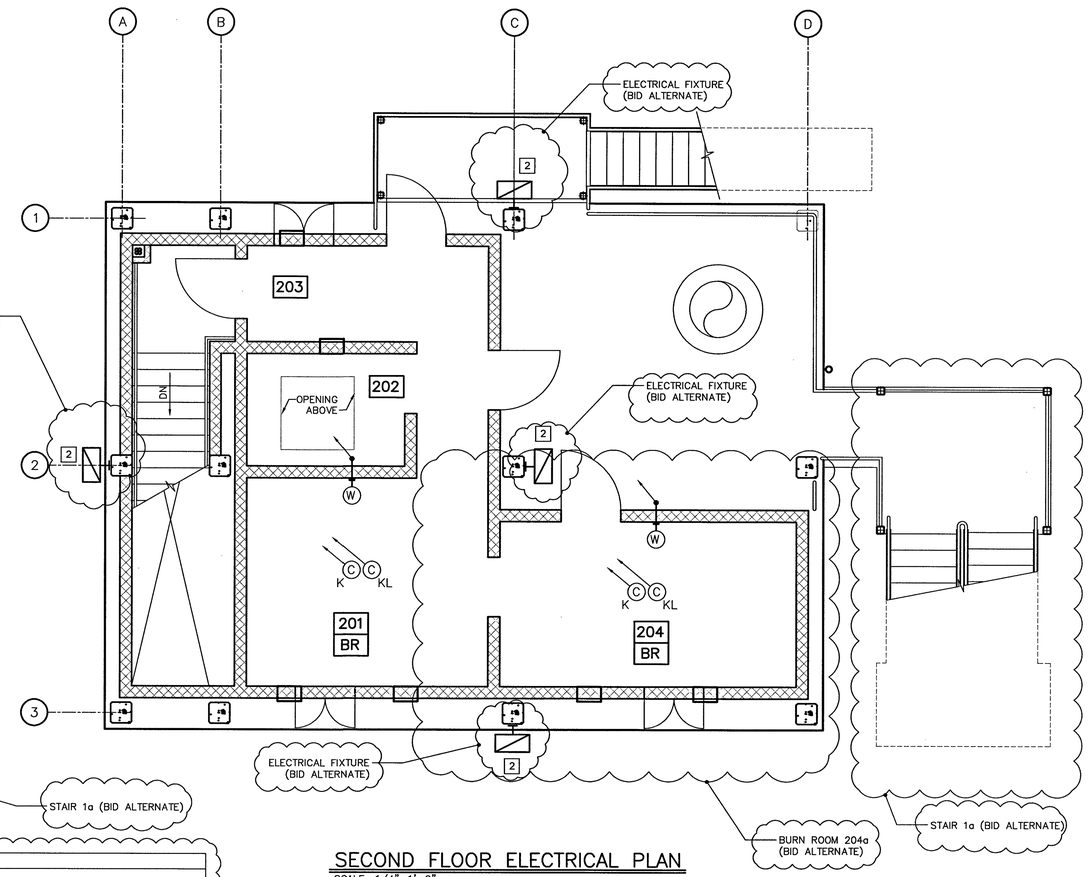

SECOND FLOOR ELECTRICAL PLAN

SCALE: 1/4"=1'-0"

NOTES:
1. ELECTRICAL PANEL "LP1" SHALL BE 120/208 VOLT 3 PHASE, 4 WIRE 200 AMP MAIN CIRCUIT BREAKER, 30 POLE PANEL. CONTRACTOR SHALL COORDINATE POWER SOURCE TO PANEL AND SIZE FEEDER TO ACCOMMODATE VOLTAGE DROP. CONDUIT SHALL BE RUN AT A MINIMUM OF 36" BELOW GRADE AND SHALL BE PVC COATED RIGID STEEL.
2. CONTRACTOR SHALL COORDINATE LOCATION OF CONDUITS, SLEEVES, PIPES, ETC. WITH CONCRETE INSTALLATION.
3. ALL ELECTRICAL FIXTURES SHALL BE G.F.C.I.
4. ALL WIRING SHALL COMPLY WITH THE APPLICABLE NATIONAL, STATE, AND LOCAL ELECTRICAL CODES. USE MINIMUM OF #12 AWG CU THHN IN 1/2 INCH RIGID STEEL CONDUITS.
5. ALL HORIZONTAL CONDUIT FOR CEILING MOUNTED AND WALL MOUNTED THERMOCOUPLES SHALL BE LOCATED AT THE CENTER OF THE SECOND FLOOR SLAB.

KEY NOTES	
KEY	NOTE
1	CONNECT TO RECEPTACLE CIRCUIT LP1-6.
2	WALL MOUNTED FLOOD LIGHT. CONNECT TO CIRCUIT LP1-3 VIA SWITCH CONTROLLED PHOTOCELL. FIXTURE BASIS OF DESIGN: H.E. WILLIAMS VF1-L35/750-HF-SR-DBZ-PC-WG-DIM-120
3	SURFACE MOUNT WP LIGHT. BASIS OF DESIGN: H.E WILLIAMS VG1-L30/750-T5-SM-DBZ-WG-DIM-120

NOTE:
1. ALL HORIZONTAL CONDUIT FOR CEILING MOUNTED AND WALL MOUNTED THERMOCOUPLES SHALL BE LOCATED AT THE CENTER OF THE HIGH ROOF SLAB.

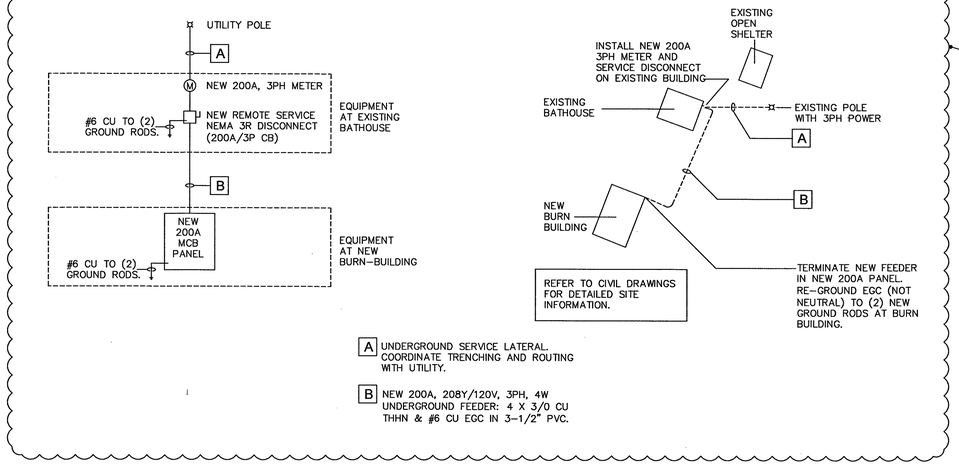

THESE ITEMS SHALL BE INCLUDED IN SITE BID

ABBREVIATIONS:

A.	AMPERE (S)
A.F.F.	ABOVE FINISHED FLOOR
A.I.C.	AMPERE INTERRUPTING CAPACITY
AWG	AMERICAN WIRE GAUGE
G.F.I.	GROUND FAULT INTERRUPT
GND	GROUND
MCB	MAIN CIRCUIT BREAKER
$WP	WEATHERPROOF SINGLE POLE 20 AMP SWITCH. SURFACE MOUNTED, 42" MOUNTING HEIGHT A.F.F.
T.L.	THERMAL LINING
T.M.S.	TEMPERATURE MONITORING SYSTEM
V	VOLT (S)
W	WATT
WP	WEATHERPROOF (NEMA 4X)

SYMBOLS:

- WEATHERPROOF CEILING MOUNTED LED CANOPY LIGHT.
- WEATHERPROOF DUPLEX RECEPTACLE, 20A, 125V, GFCI GROUNDING TYPE, HAVING NEMA TYPE 5-20 R CONFIGURATION, SURFACE MOUNTED, 18" MOUNTING HEIGHT A.F.F.
- (J) JUNCTION BOX
- CONDUIT TURNED UP
- CONDUIT TURNED DOWN
- CONDUIT RUN TO RECORDER FOR TEMPERATURE MONITORING SYSTEM U.O.N.
- (W) WALL-MOUNTED TYPE K DUPLEX THERMOCOUPLE, 60" A.F.F. SEE DETAIL 1/E2.0
- (C) K RECESSED CEILING-MOUNTED TYPE K DUPLEX THERMOCOUPLE, SEE DETAIL 2/E2.0
- (C) KL RECESSED CEILING-MOUNTED TYPE K DUPLEX THERMOCOUPLE PLACED BEHIND INSULATION OF THERMAL LINING, SEE DETAIL 2/E2.0a
- (M) EXISTING METER
- BRANCH CIRCUIT WITH 2 #12 AWG + GROUND WIRE, U.O.N., RUN EXPOSED TO PANELBOARD
- CONNECTION POINT
- REMOTE STROBE LIGHT AND HORN
- $WP WATERPROOF SWITCH
- WALL MOUNTED FLOOD LIGHT

BID ALTERNATE NOTE:
ALL ELEMENTS WITHIN THE CLOUDED AREAS SHALL BE INCLUDED IN THAT RESPECTIVE ALTERNATE BID ITEM.

VIRGINIA DEPARTMENT OF FIRE PROGRAMS

CITY OF WINCHESTER VIRGINIA

TITLE:
ELECTRICAL PLANS, ABBREVIATIONS & SYMBOLS (ALTERNATE BID)

PROJECT:
CITY OF WINCHESTER
BURN BUILDING
1716 WOODSTOCK LANE
WINCHESTER, VIRGINIA 22602

PAINTER-LEWIS, P.L.C.
817 CEDAR CREEK GRADE, SUITE #120
WINCHESTER, VIRGINIA 22601
TELEPHONE: (540) 662-5792
FACSIMILE: (540) 662-5793
EMAIL: office@painterlewis.com
CONSULTING ENGINEERS

REVISIONS	
NO.	DATE

COMMONWEALTH OF VIRGINIA
M. Howell
MICHAEL F. HOWELL
No. 008875
10 MAY 2016
PROFESSIONAL ENGINEER

DRAWN BY: RJD
JOB NO.: 1511018
DATE: 5-24-2016
SCALE: AS NOTED
SHEET: E1.0a

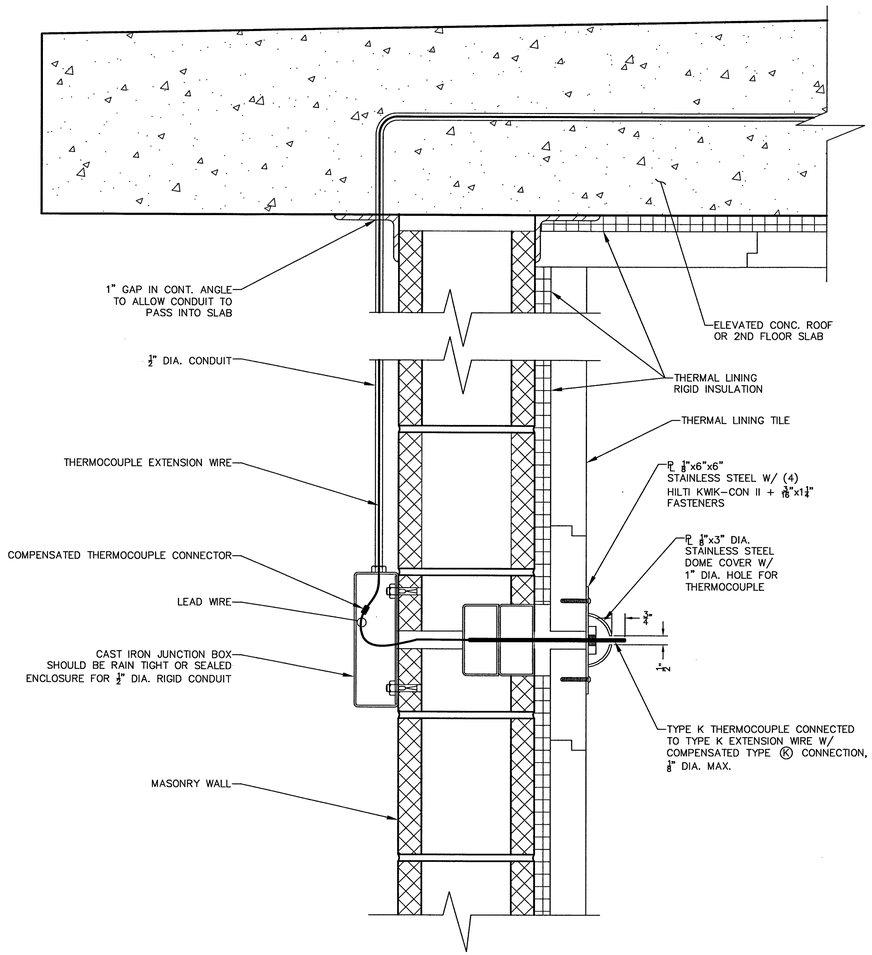

NOTE:
ALL ITEMS SHALL BE FURNISHED & INSTALLED BY G.C. U.N.O.

DETAIL 1 (E1.0 | E2.0)
SCALE: 3"=1'-0"

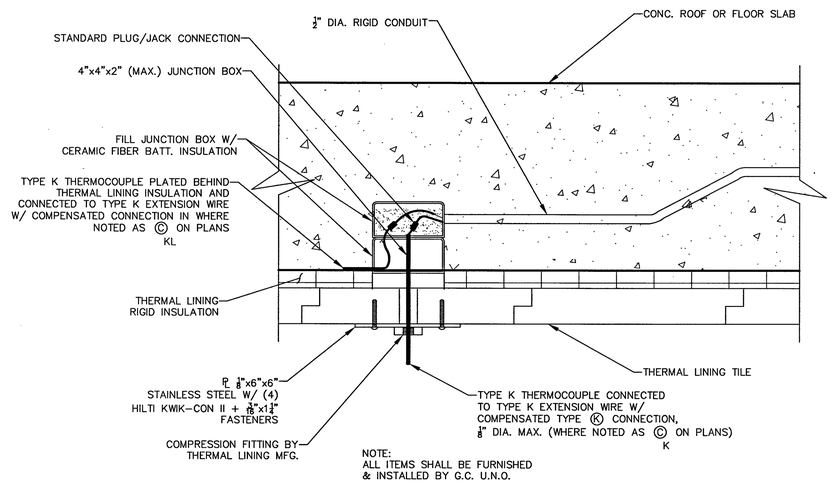

NOTE:
ALL ITEMS SHALL BE FURNISHED & INSTALLED BY G.C. U.N.O.

DETAIL 2 (E1.0 | E2.0)
SCALE: 3"=1'-0"

PANELBOARD SCHEDULE — LP-1

LOCATION: 105
SERVICE: 208Y/120V, 3PH, 4W
BUS RATING 100A : 200A
MAIN CIRCUIT BREAKER : 200A
INTERRUPT RATING: 5,000 AIC

FED FROM: FIELD DETERMINE
NEUTRAL BUS: 100%
GROUND BUS: STANDARD
MOUNTING: SURFACE
ENCLOSURE: NEMA 4X

SERVICE ENTRANCE RATED.

DESCRIPTION	CCT. NO.	CIRCUIT BREAKER	CIRCUIT LOAD	CONNECTED LOAD (VA) A	B	C	CIRCUIT LOAD	CIRCUIT BREAKER	CCT. NO.	DESCRIPTION
T.M.S. PANEL RECORDER	1	20A-1P	500	680			180	20A-1P	2	RECEPTACLE
SPARE	3	20A-1P						20A-1P	4	SPARE
SPARE	5	20A-1P						20A-1P	6	SPARE
SPARE	7	20A-1P						20A-1P	8	SPARE
SPARE	9	20A-1P						20A-1P	10	SPARE
SPARE	11	20A-1P						20A-1P	12	SPARE
SPARE	13	20A-1P						20A-1P	14	SPARE
SPARE	15	20A-1P						20A-1P	16	SPARE
SPARE	17	20A-1P						20A-1P	18	SPARE
SPARE	19	20A-1P						20A-1P	20	SPARE
SPARE	21	20A-1P						20A-1P	22	SPARE
SPARE	23	20A-1P						20A-1P	24	SPARE
SPARE	25	20A-1P						20A-1P	26	SPARE
SPARE	27	20A-1P						20A-1P	28	SPARE
SPARE	29	20A-1P						20A-1P	30	SPARE
				680	344	820				

TOTAL VA PER PHASE

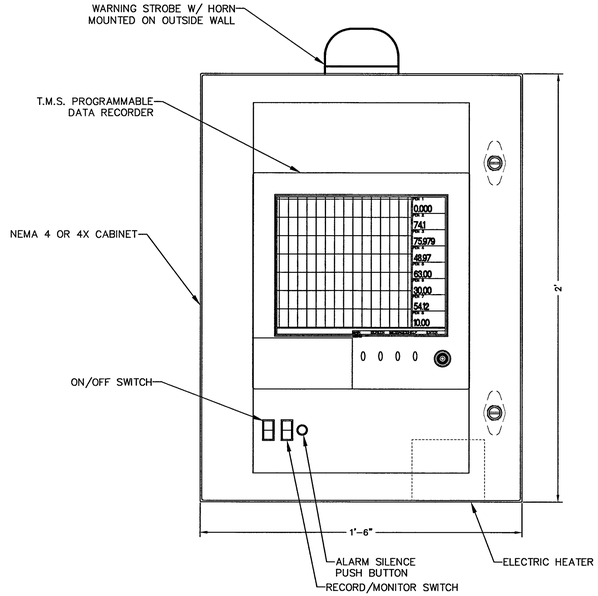

ELEVATION T.M.S. INDICATOR PANEL
SCALE: 3"=1'-0"

SCOUT TEMPERATURE MONITORING SYSTEM AS PROVIDED BY FIRE FACILITIES, INC. OR APPROVED EQUAL

TITLE: ELECTRICAL DETAILS, TMS INDICATOR PANEL, & PANEL BOARD SCHEDULE (BSAE BID)

PROJECT: CITY OF WINCHESTER BURN BUILDING 1716 WOODSTOCK LANE WINCHESTER, VIRGINIA 22602

PAINTER-LEWIS, P.L.C.
817 CEDAR CREEK GRADE, SUITE #120
WINCHESTER, VIRGINIA 22601
TELEPHONE: (540) 662-5792
FACSIMILE: (540) 662-5793
EMAIL: office@painterlewis.com
CONSULTING ENGINEERS

REVISIONS

NO.	DATE

COMMONWEALTH OF VIRGINIA
M. Howell
MICHAEL F. HOWELL
No. 008875
25 APR 2016
PROFESSIONAL ENGINEER

DRAWN BY: RJD
JOB NO.: 1511018
DATE: 08-15-2016
SCALE: AS NOTED
SHEET: E2.0

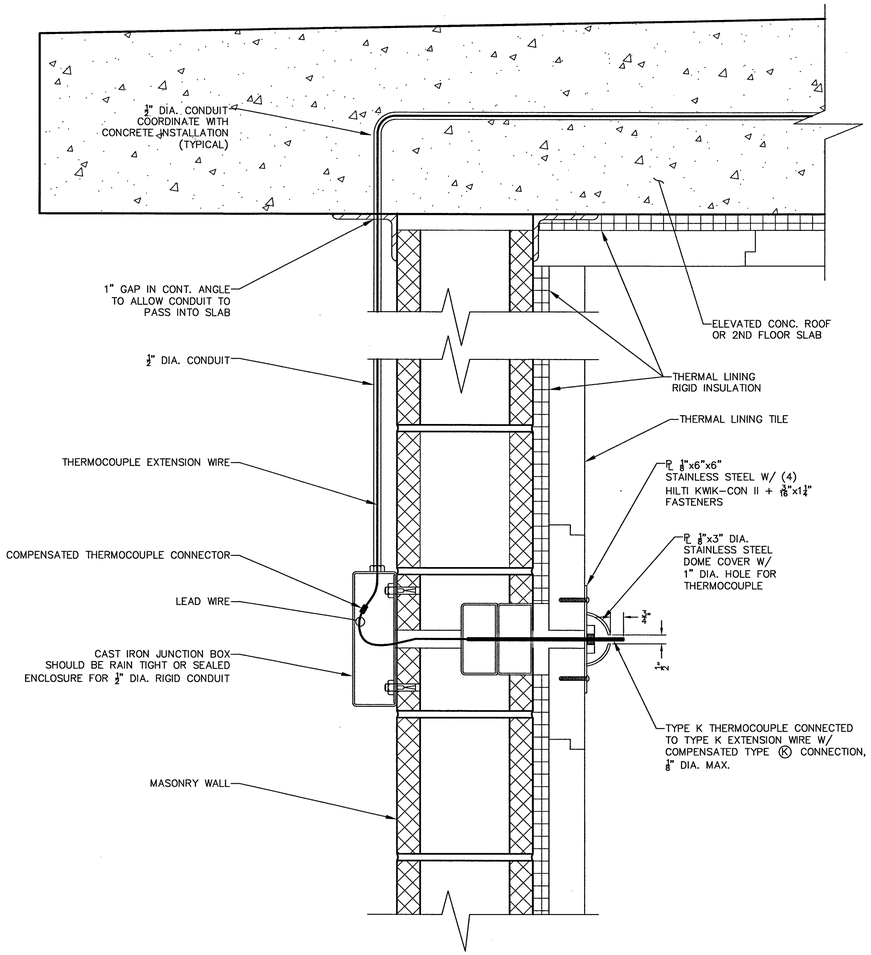

NOTE:
ALL ITEMS SHALL BE FURNISHED & INSTALLED BY G.C. U.N.O.

DETAIL 1 (E1.0 | E2.0)
SCALE: 3"=1'-0"

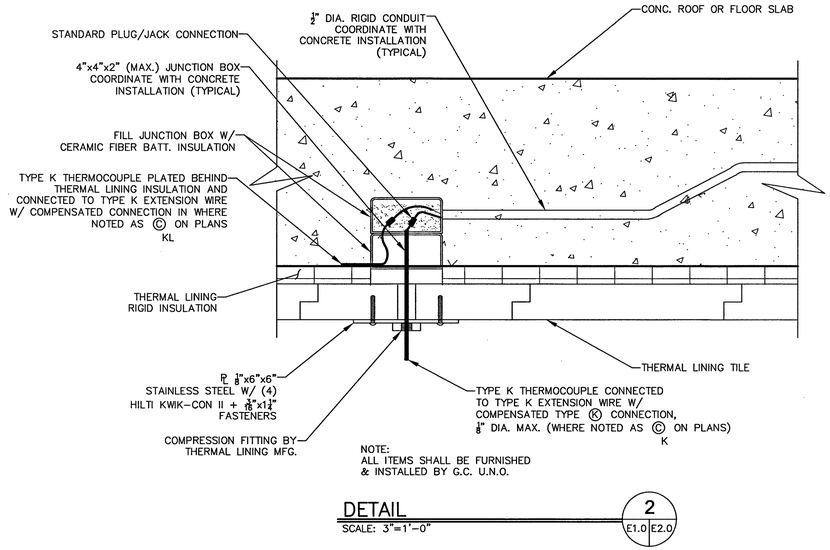

NOTE:
ALL ITEMS SHALL BE FURNISHED & INSTALLED BY G.C. U.N.O.

DETAIL 2 (E1.0 | E2.0)
SCALE: 3"=1'-0"

PANELBOARD SCHEDULE — LP-1

LOCATION: 105
SERVICE: 208Y/120V, 3PH, 4W
BUS RATING 100A :
MAIN CIRCUIT BREAKER :
INTERRUPT RATING: 5,000 AIC

FED FROM: FIELD DETERMINE
NEUTRAL BUS: 100%
GROUND BUS: STANDARD
MOUNTING: SURFACE
ENCLOSURE: NEMA 4X

SERVICE ENTRANCE RATED.

DESCRIPTION	CCT. NO.	CIRCUIT BREAKER	CIRCUIT LOAD	CONNECTED LOAD (VA) A	B	C	CIRCUIT LOAD	CIRCUIT BREAKER	CCT. NO.	DESCRIPTION
T.M.S. PANEL RECORDER	1	20A-1P	500	680			180	20A-1P	2	RECEPTACLE
FLOOD LIGHTS	3	20A-1P	144		244		100	20A-1P	4	LIGHT
T.M.S HEATER	5	20A-1P	100			820	720	20A-1P	6	BID ALTERNATE RECEPTACLES
SPARE	7	20A-1P						20A-1P	8	SPARE
LP1 PANEL HEATER	9	20A-1P	100		100			20A-1P	10	SPARE
SPARE	11	20A-1P						20A-1P	12	SPARE
SPARE	13	20A-1P						20A-1P	14	SPARE
SPARE	15	20A-1P						20A-1P	16	SPARE
SPARE	17	20A-1P						20A-1P	18	SPARE
SPARE	19	20A-1P						20A-1P	20	SPARE
SPARE	21	20A-1P						20A-1P	22	SPARE
SPARE	23	20A-1P						20A-1P	24	SPARE
SPARE	25	20A-1P						20A-1P	26	SPARE
SPARE	27	20A-1P						20A-1P	28	SPARE
SPARE	29	20A-1P						20A-1P	30	SPARE
				680	344	820				
				TOTAL VA PER PHASE						

THESE ITEMS SHALL BE INCLUDED IN SITE BID

THESE ITEMS SHALL BE INCLUDED IN SITE BID

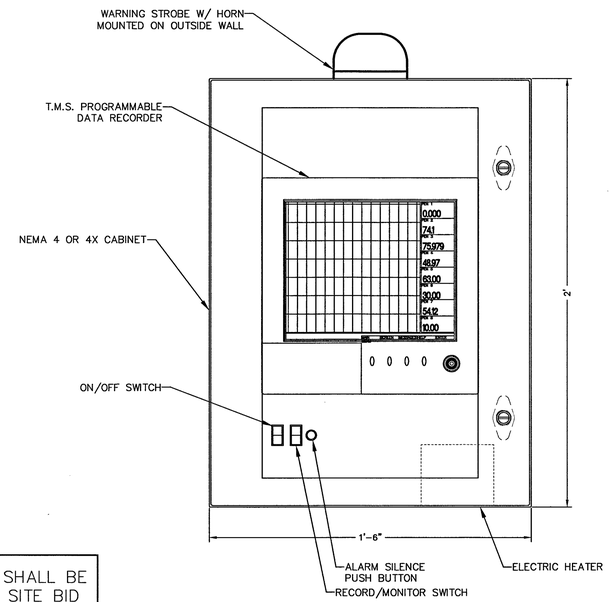

ELEVATION T.M.S. INDICATOR PANEL
SCALE: 3"=1'-0"

SCOUT TEMPERATURE MONITORING SYSTEM AS PROVIDED BY FIRE FACILITIES, INC. OR APPROVED EQUAL

BID ALTERNATE NOTE:
ALL ELEMENTS WITHIN THE CLOUDED AREAS SHALL BE INCLUDED IN THAT RESPECTIVE ALTERNATE BID ITEM.

VIRGINIA DEPARTMENT OF FIRE PROGRAMS

CITY OF WINCHESTER VIRGINIA

TITLE: ELECTRICAL DETAILS, TMS INDICATOR PANEL, & PANEL BOARD SCHEDULE (ALTERNATE BID)

PROJECT: CITY OF WINCHESTER
BURN BUILDING
1716 WOODSTOCK LANE
WINCHESTER, VIRGINIA 22602

PAINTER-LEWIS, P.L.C.
817 CEDAR CREEK GRADE, SUITE #120
WINCHESTER, VIRGINIA 22601
TELEPHONE: (540) 662-5792
FACSIMILE: (540) 662-5793
EMAIL: office@painterlewis.com
CONSULTING ENGINEERS

REVISIONS

NO.	DATE

COMMONWEALTH OF VIRGINIA
MICHAEL F. HOWELL
No. 008875
10 MAY 2016
PROFESSIONAL ENGINEER

DRAWN BY: RJD
JOB NO.: 1511018
DATE: 5-24-2016
SCALE: AS NOTED
SHEET: E2.0a

ELECTRICAL NOTES:

BASIC METHODS AND REQUIREMENTS:

1. The Electrical Contractor shall provide all labor, material, equipment, tools and services required to construct, install, complete, test, and commission the operation of the electrical systems identified within the construction documents. It is the intent of these contract documents to call for finished work, tested, and ready for operation.
2. Wherever the work "provide" is used it shall mean to furnish and install complete and ready for use.
   a. Provide all materials, bracing, hangers, connectors, and components as required to provide a complete operational electrical system.
   b. All items not specifically shown in the design documents, but which are necessary for a complete working installation in compliance with code requirements shall be provided at no additional cost.
3. The installation shall comply with applicable requirements of the International Building Code (IBC), NFPA 70 (NEC), NFPA 101 (Life Safety Code), ADA, and all local codes in effect at the project location at the time of contract award.
4. The drawings indicate the extent, general location and arrangement of equipment, components, and wiring. The contractor shall review all project requirements and coordinate the electrical installation with all trades.
   a. The Contractor shall become familiar with the work and verify all dimensions and locations so that the outlets, devices, raceways and equipment will be properly located and accessible. Actual field measurements shall prevail over any scaled measurements taken from these drawings.
   b. The Contractor shall confirm the location of all equipment that requires electrical connections with the trade installing the equipment prior to rough in of the associated electrical devices, disconnects, raceways, and wiring.
   c. The contractor shall confirm the electrical requirements and configuration (including overcurrent protective device ratings and conductor sizing) of circuits required for all equipment that requires electrical connection with the installer of such equipment prior to rough-in or installation of related electrical items.
   d. Rework required that results from failure to coordinate shall be done at the contractor's expense.
5. The drawings are diagrammatic only, intending to show general location of circuits, equipment, fixtures, and devices; and do not show all required details. All work shall be accurately laid out with reference to the drawings and in cooperation with other trades to avoid conflicts and to obtain a neat and workable installation which will afford maximum accessibility for operation, maintenance, and headroom. The electrical contractor is responsible for determining optimal routing of circuits and field investigations required to complete the installation in a professional workmanship manner. Refer to architectural drawings for exact dimensions and to mechanical drawings for locations of mechanical equipment.
6. The drawings are not intended to be rigid in specific details. In the event they are in conflict with requirements of other drawings, codes, or recommendations of the manufacturers of equipment furnished, the Electrical Contractor shall inform the General Contractor and make recommendations as required to insure that equipment is installed and connected in conformance with codes and manufacturer's recommendations for safe, proper, and efficient operation. The General Contractor shall issue a Request for Information with the proposed recommendation to the Architect.
7. The contractor, by accepting the work, represents that it is qualified to successfully accomplish the work without additional direction by the design engineer. The design engineer is not responsible for means, methods, techniques, or procedures used by the contractor during construction.
8. By submitting a proposal, contractor agrees it is satisfied from its own investigation of the conditions and requirements to be met, that it fully understands its obligation, and that it will not make any claim for or have the right to cancellation of or relief from the Contract because of any misunderstanding or lack of information.
9. In the event of conflict between various parts of the contract documents, including but not limited to drawings and general conditions, the more stringent (more costly) of the conditions shall apply for bidding purposes. The contractor shall request clarification for all conflicts prior to construction. The contractor shall make a thorough examination of the site and the contract documents. No claim for extra compensation will be recognized if difficulties are encountered which an examination of site conditions and contract documents prior to executing the contract would have revealed. Failure to request clarification shall not relieve the contractor of the requirement to provide the more costly implementation. If any conflicts occur necessitating departures from the drawings, details of and reasons for departures shall be submitted and approved prior to implementing any change.
10. All wiring not furnished and installed by others but which is required to provide a complete and operational system for equipment indicated on the drawings shall be furnished and installed by the electrical contractor. Except as otherwise noted, automatic control wiring, signaling, and protective devices for mechanical equipment shall be furnished and installed by the mechanical contractor. Each motor or group of motors requiring a single control shall be provided by others with a suitable controller. The electrical contractor shall install and connect the motor controllers furnished by others. Low voltage control devices (thermostats, limit switches, etc.) and wiring (24 Volts max.) will be installed by others. Control devices and wiring above 24 Volts shall be installed by the electrical contractor. Each motor shall be provided with a disconnecting means where required by NFPA 70, even if not shown on the drawings.
11. Procure and pay for all permits and certificates necessary to construct and place in operation all electrical work. Pay for all legally imposed charges made by the local authorities for full inspection and approval services of the bureaus administering applicable codes and regulations. This shall include the cost and back charge of installing any portion of the work where performed by utility departments, and utility companies such as for trenching and installation on conduit. Capital improvement costs that may be imposed by the utility for new or upgraded service (such as extending primary wiring to transformers or upgrading transformers) shall be paid by the owner.

MATERIALS

1. Material and equipment shall be new and shall be the standard specification grade products of established manufacturers. Materials, equipment, and installation shall conform to the requirements of ANSI, IEEE, NEMA, and UL as applicable
2. Submit for approval catalog information for: Lighting Fixtures, Lighting Controls, Panelboards, and Fire Alarm System (when shown on drawings).
3. Equipment and material shall be protected during shipment and storage against physical damage, dirt, moisture, cold and rain.
4. Unless otherwise indicated, wiring shall consist of insulated conductors installed in conduit or tubing. Unless shown otherwise, minimum conduit size shall be 3/4". All conductors shall be copper with type THWN/THHN insulation rated 90C. Conductor sizing is based upon use of terminals rated 75C. Aluminum conductors of equivalent ampacity may be used for circuits 100 Amps or larger. The Contractor shall make all required changes to conduit sizes, terminals, and sizing for voltage drop for conductor substitutions at no additional cost. Conductors shall be color coded: Black (A), Red (B), Blue (C) for 208/120 and Brown (A), Orange (B), Yellow(C) for 480/277.
5. Wire sizes, including equipment grounding conductors, shall be adjusted for voltage drop based upon actual circuit lengths of installed wiring to achieve 3% voltage drop for branch circuits and 2% voltage drop for feeders. Raceway sizes shall be revised as needed for upsized conductors.
6. Wiring shall be in rigid galvanized conduit.
7. Panelboards shall be completely factory assembled with molded case circuit breakers. Short circuit interrupting ratings (AIR) of all provided components shall be coordinated with the ratings of all new and any existing electrical gear. Series rated assemblies are not permitted.
8. Lighting controls shall be provided in accordance with IECC or ASHRAE requirements as enforced by state building codes. Control schemes shown on the drawings are diagrammatical only and the contractor shall finalize design details and component selection to achieve the required operational performance. Refer to functional testing requirements later in these notes.
9. Receptacles and switches shall be specification grade. Standard duplex receptacles shall be single phase, 15 Ampere, 120 volts, 2 pole, 3 wire, and conform to the NEMA 5 20R configuration Devices and cover-plates shall be of the color and material determined by the architect. Outlets shall be hospital grade in patient bed areas of health care facilities per NEC. Dimmer switches shall be specification grade and be matched to the load being served (incandescent, fluorescent, or LED)
10. Supporting Devices
    a. Material: Cold-formed steel, with corrosion resistant coating acceptable to authorities having jurisdiction.
    b. Metal Items for Use Outdoors or in Damp Locations: Hot-dip galvanized steel.
    c. Slotted-Steel Channel Supports: Flange edges turned toward web, and 9/16-inch diameter slotted holes at a maximum of 2 inches o.c., in webs.
    d. Slotted Steel Channel Supports: Comply with Division 5 Section "Metal Fabrications" for slotted channel framing.
    a. Channel Thickness: Selected to suit structural loading.
    b. Fittings and Accessories: Products of the same manufacturer as channel supports.
    e. Nonmetallic Channel and Angle Systems: structural-grade, factory-formed, glass-fiber- resin channels and angles with 9/16-inch diameter holes at a maximum of 8 inches o.c., in at least one surface.
    a. Fittings and Accessories: Products of the same manufacturer as channels and angles.
    b. Fittings and Accessory Materials: Same as channels and angles, except metal items may be stainless steel.
    f. Raceway and Cable Supports: Manufactured clevis hangers, riser clamps, straps, threaded C-clamps with retainers, ceiling trapeze hangers, wall brackets, and spring-steel clamps or click-type hangers.
    g. Pipe Sleeves: ASTM A 53, Type E, Grade A, Schedule 40, galvanized steel, plain ends.
    h. Cable Supports for Vertical Conduit: Factory-fabricated assembly consisting of threaded body and insulating wedging plug for non-armored electrical cables in riser conduits. Plugs have number and size of conductor gripping holes as required to suit individual risers. Body constructed of malleable-iron casting with hot-dip galvanized finish.
    i. Expansion Anchors: Carbon-steel wedge or sleeve type. Plastic conical anchors are not allowed.
    j. Toggle Bolts: All-steel springhead type.
    k. Power-Driven Threaded Studs: Heat-treated steel.

INSTALLATION

1. The work shall be laid out in advance, and where cutting, channeling, chasing, or drilling of floors, walls, partitions, ceilings, or other surfaces is necessary for the proper installation, support, or anchorage of the conduit, raceways, or other electrical work, this work shall be done and any damage to building, piping, or equipment shall be repaired by skilled tradesmen of the trades involved at no additional cost to the owner.
2. Coordinate chases, slots, inserts, sleeves, and openings with general construction work and arrange in the building structure during progress of construction to facilitate the electrical installations that follow: Set inserts and sleeves in poured-in-place concrete, masonry work, and other structural components as they are constructed.
3. SUPPORT INSTALLATION
   a. Install support devices to securely and permanently fasten and support electrical components.
   b. Install individual and multiple raceway hangers and rise clamps to support raceways. Provide U-bolts, clamps, attachments, and other hardware necessary for hanger assemblies and for securing hanger rods and conduits.
   c. Support parallel runs of horizontal raceways together on trapeze-or bracket-type hangers.
   d. Size supports for multiple raceway installations so capacity can be increased by 25 percent minimum in the future.
   e. Support individual horizontal raceways with separate, malleable-iron pipe hangers or clamps.
   f. Install 1/4-inch diameter or larger threaded steel hanger rods, unless otherwise indicated.
   g. Spring-steel fasteners specifically designed for supporting single conduits or tubing maybe used instead of malleable-iron hangers for 1-1/2-inch and smaller raceways serving lighting and receptacle branch circuits above suspended ceilings and for fastening raceways to slotted channel and angle supports.
   h. Arrange supports in vertical runs so the weight of raceways and enclosed conductors is carried entirely by raceway supports, with no weight load on raceway terminals.
   i. Simultaneously install vertical conductor supports with conductors.
   j. Separately support cast boxes that are threaded to raceways and used for fixture support. Support sheetmetal boxes directly from the building structure or by bar hangers. If bar hangers are used, attach bar to raceways on opposite sides of the box and support the raceway with an approved fastener not more than 24 inches from the box.
   k. Install metal channel racks for mounting cabinets, panelboards, disconnect switches, control enclosures, pull and junction boxes, transformer, and other devices unless components are mounted directly to structural elements of adequate strength.
   l. Install sleeves for cable and raceway penetrations of concrete slabs and walls unless core- drilled holes are used. Install sleeves for cable and raceway penetrations of masonry and fire-rated gypsum walls and of all other fire-rated floor and wall assemblies. Install sleeves during erection of concrete and masonry walls.
   m. Securely fasten electrical items and their supports to the building structure, unless otherwise indicated. Perform fastening according to the following, unless other fastening methods are indicated.
      1) Wood: Fasten with wood screws or screw-type nails.
      2) Masonry: Toggle bolts on hollow masonry units and expansion bolts on solid masonry units. Plastic conical anchors are not allowed.
      3) New Concrete: Concrete inserts with machine screws and bolts.
      4) Existing Concrete: Steel expansion bolts.
      5) Instead of expansion bolts, threaded studs driven by a powder charge and provided with lock washers may be used in existing concrete.
      6) Steel: Welded threaded studs or spring-tension clamps on steel. a. Field Welding: Comply with AWS D1.1.
      7) Welding to steel structure may be used only for threaded studs, not for conduits, pipe straps, or other items.
      8) Light Steel: Sheet-metal screws.
      9) Fasteners: Select so the load applied to each fastener does not exceed 25 percent of its proof-test load.
4. During installation, enclosures, equipment, controls, controllers, circuit protective devices, and other like items, shall be protected against entry of foreign matter; and be vacuum cleaned both inside and outside before testing, operating and painting.
   a. Damaged equipment shall be placed in first class operating condition or be returned to the source of supply for repair or replacement
   b. Painted surfaces shall be protected with factory installed removable heavy protective paper, sheet vinyl, or equivalent covering.
   c. Damaged paint on equipment and materials shall be refinished with the same quality of paint and workmanship as used by the manufacturer so that repaired areas are not obvious.
5. The contractor shall perform all temporary work necessary to maintain continuity of electrical service when connection is made to existing systems and facilities. Existing services shall not be interrupted without prior consent of the owner's authorized representative and may be interrupted only at and for the specified time designated by the owner's representative.
6. Electrical service entrance equipment, including arrangements for temporary power, shall conform to the serving power company's requirements. Coordinate routing, trenching, and conduit requirements with the power company.
7. The contractor shall provide product finishes and constructions compatible with wall and ceiling types based upon the contractor's review of all project requirements.
8. Penetrations of above grade floor slabs, time-rated partitions, and fire walls shall be fire stopped. Penetrations of fire rated floors, walls, and ceilings shall be installed in accordance with listed UL applications. See architectural drawings for location of fire rated assemblies. Materials and equipment shall be installed in accordance with recommendations of the manufacturer. At floor, exterior wall, and roof conduit penetrations, completely seal clearances around the conduit and make watertight
9. Raceways shall be kept 6 inches away from parallel runs of flues and hot-water pipes. Raceways shall be concealed within finished walls, ceilings, and floors of finished areas. Raceways may be run exposed in non-finished areas, such as utility rooms. Install conduit in complete runs before pulling in cables or wires. Independently support conduit. Do not use other supports i.e., (suspended ceilings, suspended ceiling supporting members, lighting fixtures, mechanical piping, or mechanical ducts).
10. All electrical wiring below slab on grade shall be protected by a PVC conduit system. Raceways crossing structural expansion joints shall have expansion fittings. Changes in direction of runs shall be made with symmetrical bends or fittings. Crushed or deformed raceways shall not be installed. Trapped raceways in damp and wet locations shall not be installed. Clogged raceways shall be entirely free of obstructions or shall be replaced.
11. Panelboards shall be flush when installed on finished wall surfaces. Panelboards shall be surface mount when installed in unfinished rooms. Where designated on panel schedule as "space" or "spare", include all necessary bussing, device support and connections. Provide blank cover for each space.
12. Placement of lighting fixtures, outlets, panelboards, transformers, disconnect switches and other items shall be located to avoid interference with mechanical or structural features.
13. Lighting fixtures shall be symmetrically placed in rooms.
    a. Lighting fixtures that are non-IC rated shall be installed such that no insulation is within 3 inches of the fixture and none on top so as to trap heat. Non-IC lighting fixtures shall not be installed within 1/2 inch of combustible material.
    b. Lighting fixtures installed in fire rated ceilings shall be rated for equivalent fire resistance, or equipped with a boot or box-out to maintain the ceiling system fire rating.
    c. The contractor shall field confirm all new and existing ceiling types to identify mounting requirements prior to order of lighting fixtures. All accessories and options required to successfully install the fixtures in the ceilings shall be provided, including those needed for fire rated applications.
    d. Connect recessed lighting fixtures to conduit runs with maximum six feet of flexible metal conduit extending from a junction box to the fixture.
    e. At completion of project, re-lamp/re-ballast fixtures which have failed lamps/ballasts. Clean fixtures, lenses, diffusers and louvers that have accumulated dust/dirt/fingerprints during construction. Replace damaged lenses, diffusers and louvers with new.
14. Where light switches are shown grouped together they shall be mounted under a multi-gang cover-plate. Where dimmer switched are used, the mounting box size shall be based upon thermal de-rating requirements of the dimmers.
15. Outlets shall be mounted not less than 15" above finished floor per ADA guidelines. Switches shall be mounted not more than 48" above finished floor per ADA guidelines. Outlets and switches at counter top locations shall be mounted not more than 44"-46" above finished floor per ADA guidelines. Field coordinate location of counter mounted devises with counter installer.
16. The Electrical contractor shall coordinate with the Mechanical contractor for the installation of electrical components required to serve mechanical equipment. The contractor shall confirm equipment circuit requirements with the Mechanical contractor prior to rough-in of electrical circuits. Any re-work required to provide the electrical installation needed for compliance with actual nameplate requirements for equipment shall be accomplished at no additional cost. Nameplate data of actual equipment supplied shall be used for final circuit configurations. Adjustments from values shown on panel schedules shall be made as part of the contract.
17. Make final connections to equipment supplied by others. Controls and starters related to mechanical equipment shall be supplied by the mechanical contractor. Controls and starters for owner furnished equipment shall be supplied by others. Electrical contractor shall make electrical connections to equipment from point of electrical circuit shown on drawings for equipment. Electrical contractor shall make connections to owner furnished equipment serviced by either hard wiring or service cord drops. Electrical contractor shall provide means of disconnection of equipment from electrical circuit if starter or controller supplied with equipment does not meet NEC requirements for disconnect.
18. Install green grounding conductors with feeders and branch circuits as indicated in panel schedules and one line diagram. Bond the grounding wires to each pullbox, junction box, outlet box, cabinets, and other enclosures through which the ground wires pass. Bond all conductive piping systems in the building to the electrical system ground. Bonding connections shall be made as close as practical to the water pipe ground or service equipment ground bus.
19. Major pieces of electrical equipment shall be permanently marked with an identification nameplate. All panelboards shall have removable typewritten panel directories inserted into plastic sleeves mounted on the inside face of the panelboard door. The directory shall describe the as-built circuit configurations of the panel per NEC requirements. Marking directly on the panelboard is not permitted.
20. Duct smoke detector requirements shall be installed per local code requirements. The Electrical contractor shall coordinate with the Mechanical contractor for control interface requirements.
21. After the electrical installation is completed, the Electrical Contractor shall conduct a safety and an operating test of the electrical system. The electrical contractor shall furnish all instruments and personnel required for the tests. No part of the electrical distribution system shall be energized prior to the testing of the grounding system. Resistance tests shall be made for service entrances and feeders installed as part of this project. Proper phase rotation shall be confirmed for all 3 phase motors.
22. Functional testing or lighting controls shall be performed in accordance with IECC or ASHRAE requirements locally enforced. The testing shall demonstrate controls are calibrated, adjusted, programmed and in proper working condition. Testing shall confirm proper operation of occupancy sensors, photo sensors, and time switches. The contractor shall instruct the client as to the proper operation and programming requirements of the system. The functional testing must be made by an independent party, such as a representative of the lighting control manufacturer, who is not part of the building design engineering firm or a member of the construction contractor's team. The testing party shall provide documentation certifying operational compliance with energy code requirements.
23. All work shall pass inspection by proper authorities prior to acceptance by the owner. Costs for permits, certificates, and inspections required for completion of the work shall be paid by the Electrical Contractor.
24. The contractor shall warrant the complete electrical installation at the time of completion for a period of one year. During the warranty period the contractor shall replace or repair any components or work which develop defects beyond normal wear and tear. The electrical contractor shall be responsible for, and shall incur financial responsibility for any damages caused by or resulting from defects in his work.
25. The contractor shall provide as-built and record drawings indicating all changes in equipment, devices, and conduit locations to the general contractor for delivery to the owner as part of the project close-out

END OF NOTES

BID ALTERNATE NOTE:
ALL ELEMENTS WITHIN THE CLOUDED AREAS SHALL BE INCLUDED IN THAT RESPECTIVE ALTERNATE BID ITEM.

VIRGINIA DEPARTMENT OF FIRE PROGRAMS

CITY OF WINCHESTER VIRGINIA

TITLE: ELECTRICAL NOTES (ALTERNATE BID)

PROJECT: CITY OF WINCHESTER BURN BUILDING 1716 WOODSTOCK LANE WINCHESTER, VIRGINIA 22602

PAINTER-LEWIS, P.L.C.
817 CEDAR CREEK GRADE, SUITE #120
WINCHESTER, VIRGINIA 22601
TELEPHONE: (540) 662-5792
FACSIMILE: (540) 662-5793
EMAIL: office@painterlewis.com
CONSULTING ENGINEERS

REVISIONS	
NO.	DATE

COMMONWEALTH OF VIRGINIA
M. Howell
MICHAEL F. HOWELL
No. 008875
20 MAY 2016
PROFESSIONAL ENGINEER

DRAWN BY: RJD
JOB NO.: 1511018
DATE: 5-24-2016
SCALE: AS NOTED
SHEET: E3.0