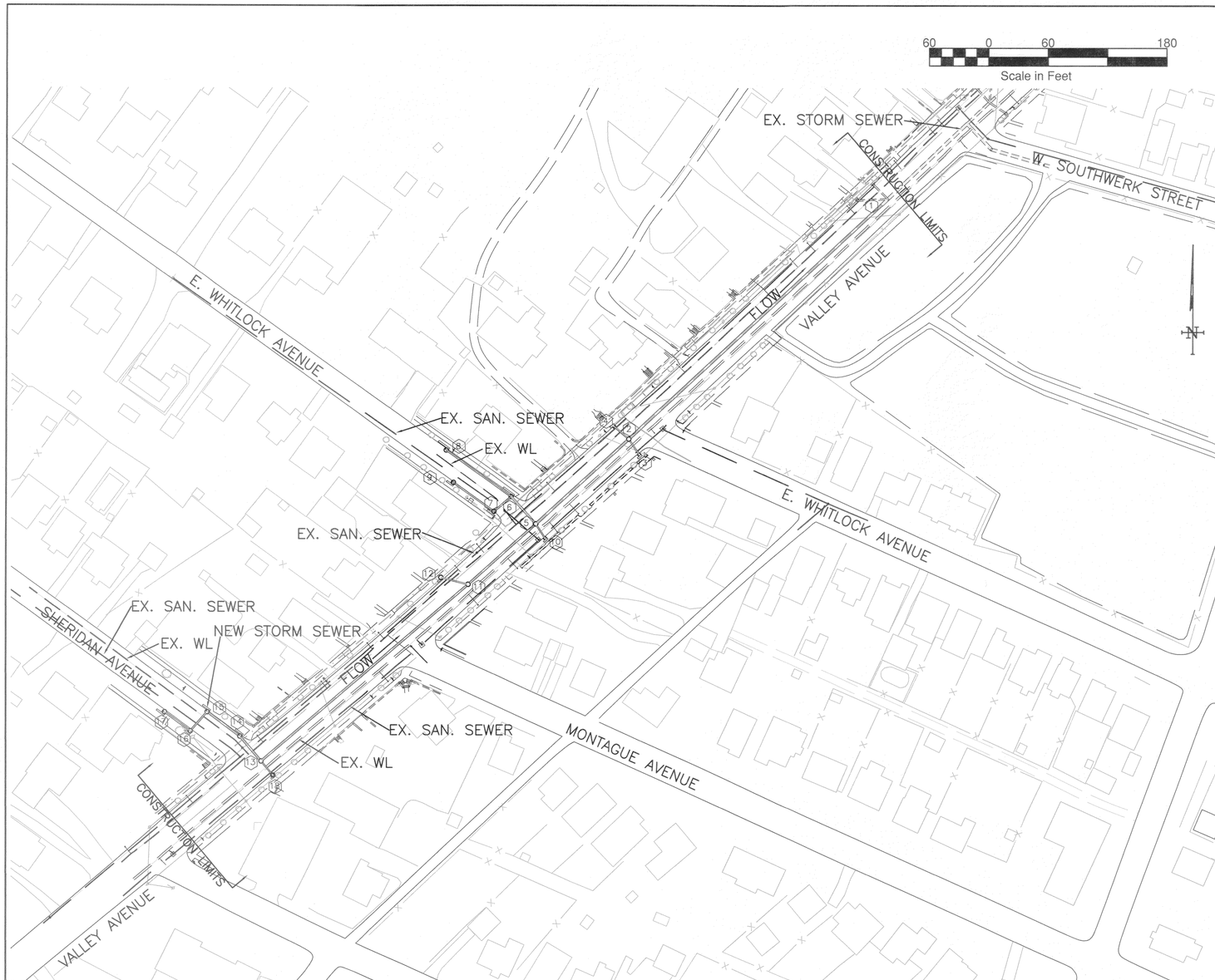

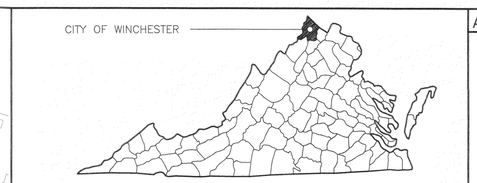

VICINITY MAP

SITE LOCATION MAP

GENERAL NOTES:

GENERAL NOTES:
1. ALL WORK AND MATERIALS SHALL CONFORM TO THE CURRENT STANDARDS OF THE CITY OF WINCHESTER, VIRGINIA, THE VIRGINIA DEPARTMENT OF TRANSPORTATION, AND THE REGULATIONS OF THE AMERICANS WITH DISABILITIES ACT, WHERE APPLICABLE.

2. EROSION AND SEDIMENT CONTROL SHALL CONFORM TO THE STANDARDS AND SPECIFICATIONS OF THE COMMONWEALTH OF VIRGINIA AND THE CITY OF WINCHESTER, VIRGINIA, WHERE APPLICABLE.

3. IT SHALL BE THE RESPONSIBILITY OF THE CONTRACTOR TO NOTIFY "MISS UTILITY" AT 811 AT LEAST TWO (2) WORKING DAYS, BUT NOT MORE THAN TEN (10) DAYS, PRIOR TO THE COMMENCEMENT OF ANY LAND DISTURBING ACTIVITY.

PAVING AND CONCRETE:
1. THE PROPOSED ROADWAYS RECEIVE THE REPAIR PAVEMENT SECTION, AS DETAILED ON THE PLANS. ALL POINTS OF CONNECTION WITH THE EXISTING PAVEMENT SECTIONS SHALL BE SAW-CUT TO PROVIDE A SMOOTH TRANSITION BETWEEN PAVEMENT SECTIONS.

2. ALL CONCRETE SHALL BE VDOT CLASSIFICATION A-3 CONCRETE. THE CONCRETE ENTRANCE AND ON-SITE CURB AND GUTTER SHALL CONFORM TO VDOT STANDARD CG-2 AND CG-6. ALL WORK SHALL BE DONE IN ACCORDANCE WITH THE STANDARDS AND SPECIFICATIONS OF VDOT.

4. ALL EXISTING UTILITIES HAVE BEEN SHOWN BASED UPON THE BEST AVAILABLE INFORMATION. HOWEVER, THERE MAY BE EXISTING UTILITIES WHICH ARE NOT SHOWN AND SHOULD BE LOCATED. THEREFORE, IT SHALL BE THE RESPONSIBILITY OF THE CONTRACTOR TO VERIFY THE LOCATION OF ALL EXISTING UTILITIES PRIOR TO CONSTRUCTION. ANY DISCREPANCIES BETWEEN THESE PLANS AND THE ACTUAL FIELD CONDITIONS SHALL BE REPORTED IMMEDIATELY TO THE ENGINEER, THE OWNER, AND THE APPROPRIATE UTILITY COMPANY.

5. ALL PROPOSED UTILITIES SHALL BE INSTALLED UNDERGROUND, EXCEPT FOR RELOCATED OVERHEAD POWER, TELEPHONE, AND CATV.

6. IT SHALL BE THE RESPONSIBILITY OF THE CONTRACTOR TO OBTAIN ALL PERMITS NECESSARY FOR CONSTRUCTION PRIOR TO COMMENCEMENT OF WORK. AN APPROVED SET OF CONSTRUCTION DOCUMENTS SHALL BE PRESENT ON THE SITE AT ALL TIMES.

7. TOPOGRAPHIC INFORMATION WAS DERIVED FROM A FIELD SURVEY PERFORMED BY PAINTER-LEWIS, P.L.C. (540) 662-5792. A CONTOUR INTERVAL OF ONE (1') FOOT HAS BEEN ESTABLISHED FOR THIS PROJECT.

8. NO SOILS REPORT WAS PREPARED FOR THIS PROJECT.

9. ALL RADII DESIGNATIONS INDICATE FACE OF CURB, EDGE OF PAVEMENT, OR EDGE OF STONE PAVEMENT, WHERE APPLICABLE.

10. THE CONTRACTOR SHALL COORDINATE THE RELOCATION OF AND THE CONNECTION TO EXISTING UTILITIES WITH THE APPROPRIATE UTILITY COMPANY, WHERE APPLICABLE.

11. SPECIFICATIONS PROVIDED BY THE CITY OF WINCHESTER SHALL PREVAIL IN THE CASE OF CONFLICTS WITH THESE PLANS.

EXCAVATION AND GRADING:
1. TEST PITS SHALL BE EXCAVATED TO DETERMINE THE DEPTHS AND LOCATIONS OF ALL OF THE EXISTING UTILITIES. IF CONFLICTS EXIST, THEN THE EXISTING UTILITIES SHALL BE LOWERED OR MOVED TO PROMOTE THE CONSTRUCTION OF THE PROPOSED DEVELOPMENT.

2. ALL DELETERIOUS MATERIALS, DEMOLISHED DEBRIS, AND CLEARED AND GRUBBED MATERIALS SHALL BE REMOVED AND PROPERLY DISPOSED OF OFF-SITE.

3. ALL TOPSOIL OR VEGETATIVE COVER SHALL BE EXCAVATED TO ITS FULL DEPTH AND STOCKPILED ON-SITE, IF APPLICABLE, IN THE AREA AS DIRECTED BY THE OWNER'S REPRESENTATIVE FOR FUTURE FINISH GRADING.

4. ALL BORROW FILL MATERIAL, IF NECESSARY, SHALL BE OBTAINED BY THE CONTRACTOR AND APPROVED BY A CERTIFIED GEO-TECHNICAL ENGINEER. ALL FILL MATERIAL SHALL BE PLACED IN LIFTS OF 8" OR LESS AND SHALL BE COMPACTED TO 95% OF ASTM D-698 MAXIMUM DRY DENSITY, OR AS DIRECTED BY THE GEO-TECHNICAL ENGINEER.

5. NO BLASTING SHALL BE PERMITTED WITHOUT PERMISSION OF THE OWNER.

6. ALL LANDSCAPED ISLANDS, SLOPES, AND LAWN AREAS SHALL RECEIVE A MINIMUM OF 6" TOPSOIL OBTAINED OFF-SITE OR FROM THE TOPSOIL STOCKPILE ON SITE. THE TOPSOIL SHALL BE GRADED AND RAKED, PRIOR TO APPLICATION OF PERMANENT VEGETATIVE COVER.

MISCELLANEOUS:
1. RESTORE ALL TRAFFIC STRIPING AND SIGNS TO PRECONSTRUCTION CONDITION OR BETTER.

2. PROVIDE A MAINTENANCE OF TRAFFIC PLAN TO THE CITY PRIOR TO STARTING CONSTRUCTION.

3. RESTORE ALL PAVEMENT, SIDEWALKS, RAMPS, CURB, ETC TO PRECONSTRUCTION CONDITION OR BETTER.

ABBREVIATIONS

ASSY.	ASSEMBLY
B.F.	BASEMENT FLOOR
BLK.	BLOCK
BC	BOTTOM OF CURB
BML	BUILDING MOUNTED LIGHT
BP	BREAK POINT
CG-2	VDOT CURB
CG-6	VDOT CURB & GUTTER
CIP	CAST IN PLACE CONCRETE
CL	CLASS
CMF	CONCRETE MONUMENT FOUND
CPP	CORRUGATED POLYETHYLENE PIPE
CMP	CORRUGATED METAL PIPE
CMPA	CORRUGATED METAL PIPE ARCH
CO	CLEAN OUT
DIA.	DIAMETER
DS	DOWNSPOUT
EOP	EDGE OF PAVEMENT
EOG	EDGE OF GRAVEL
ESMT.	EASEMENT
EX.	EXISTING
F.F.	FIRST FLOOR
F.F.E.	FINISHED FLOOR ELEVATION
FDC	FIRE DEPARTMENT CONNECTION
FH	FIRE HYDRANT
F.L.S.	FIRE LANE SIGN
F.LT.	FLOOD LIGHT
Ga.	GAUGE
GM	GAS METER
GV	GAS VALVE or GATE VALVE
HCR	HANDICAP RAMP
HB	HOSE BIB
HDR CURB	6" HEADER CURB
HP	HIGH POINT
INC	INCREASER
INV	INVERT
IPF	IRON PIPE FOUND
IPS	IRON PIPE SET
LP	LOW POINT
LT.	LIGHT
MLP	METAL LIGHT POLE
MPD	MULTI-PRODUCT DISPENSER
MP	METAL POST
MH	MANHOLE
NDC	NOSE DOWN CURB
N.P.S.	NO PARKING SIGN
NLT	NO LEFT TURN
NRT	NO RIGHT TURN
N.T.S.	NOT TO SCALE
OHE	OVERHEAD ELECTRIC
OHT	OVERHEAD TELEPHONE
PIV	POST INDICATOR VALVE
PL	PROPERTY LINE
PP	POWER POLE
PROP.	PROPOSED
PVMT	PAVEMENT
RCP	REINFORCED CONCRETE PIPE
R.D.	ROOF DRAIN
RED.	REDUCER
R.O.	ROCK OUTCROP
SAN.	SANITARY
SEW.	SEWER
STD.	STANDARD
T.B.D.	TO BE DEMOLISHED
T.B.R.	TO BE REMOVED
T.B.P.	TO BE PRESERVED or PROTECTED
TB or T.B.	THRUST BLOCK
TC	TOP OF CURB
TEL.	TELEPHONE
TRB	TELEPHONE RISER BOX
TVRB	TELEVISION RISER BOX
TYP or TYP.	TYPICAL
UGE	UNDERGROUND ELECTRIC
UGG	UNDERGROUND GAS
UG CATV	UNDERGROUND CABLE T.V.
UGT	UNDERGROUND TELEPHONE
XFMR	ELECTRIC TRANSFORMER
WL	WATERLINE
WM	WATER METER
WPP	WOOD POWER POLE
WTP	WOOD TELEPHONE POLE
WV	WATER VALVE
25'R	RADIUS IN FEET
*00.00	PROPOSED SPOT ELEVATION
x(00.00)	EXISTING SPOT ELEVATION
	HATCHING INDICATES REVERSED PITCH IN THE GUTTER PAN: PITCH TO BE 1/2" PER FOOT. TRANSITION THE GUTTER OVER A 10' LENGTH (TYP).

COMMONWEALTH OF VIRGINIA
7-6-2015
JOHN C. LEWIS
Lic. No. 022621
PROFESSIONAL ENGINEER

LIST OF DRAWINGS:

SHEET	1/7:	COVER SHEET
SHEET	2/7:	CONSTRUCTION DETAILS
SHEET	3/7:	STORM SEWER PLAN & PROFILE STR 5-STR 11-STR 13
SHEET	4/7:	STORM SEWER PLAN & PROFILE STR EX 1-STR 2
SHEET	5/7:	STORM SEWER PLAN & PROFILE STR 18-STR 13 STR 17-STR 16-STR 15-STR 14-STR 13
SHEET	6/7:	STORM SEWER PLAN & PROFILE STR 3-STR 2, STR 4-STR 2 STR 10-STR 5, STR 12-STR 11 PHASE 2 EROSION & SEDIMENT CONTROL PLAN
SHEET	7/7:	STORM SEWER PLAN & PROFILE STR 9-STR 8-STR 6-STR 5 STR 7-STR 6
SHEET	1/1:	SUPPLEMENTAL DATA DRAINAGE AREA MAP HYDRAULIC ANALYSIS DATA

UTILITY AND REGULATORY CONTACTS:

WATER AND SEWER SERVICE
City of Winchester Public Utilities
Rouss City Hall
15 North Cameron Street
Winchester, VA 22601
540-667-1815

BUILDING INSPECTIONS
City of Winchester Inspections Department
Rouss City Hall
15 North Cameron Street
Winchester, VA 22601
540-667-1815

EROSION AND SEDIMENT CONTROL
City of Winchester Department Engineering
Rouss City Hall
15 North Cameron Street
Winchester, VA 22601
540-667-1815

PUBLIC ROAD IMPROVEMENTS
City of Winchester Department Engineering
Rouss City Hall
15 North Cameron Street
Winchester, VA 22601
540-667-1815

NATURAL GAS
Washington Gas
350 Hillandale Lane
Winchester, VA 22602
540-868-7923

ELECTRIC SERVICE
Shenandoah Valley Electric Cooperative
3463 Valley Pike
Winchester, VA 22602
540-450-0111

TELEPHONE SERVICE
Verizon
404 Hillandale Lane
Winchester, VA 22602
540-665-3156

OWNER:
City of Winchester
Rouss City Hall
15 North Cameron Street
Winchester, Virginia 22601
Contact: Mr. Perry Eisenach
Tel: 540-667-1815

ENGINEER/LANDSCAPE ARCHITECT:
Painter-Lewis, PLC
817 Cedar Creek Grade, Suite 120
Winchester, VA 22601
Contact: John C. Lewis, P.E.,L.L.A.
Tel: 540-662-5792

RESPONSIBLE LAND DISTURBER

NAME: _____

CERTIFICATION #: _____

DATE: _____

THE RESPONSIBLE LAND DISTURBER IS THE PARTY RESPONSIBLE FOR CONSTRUCTION & MAINTENANCE OF ALL THE LAND DISTURBING ACTIVITIES AS SET FORTH IN THESE PLANS.

VALLEY AVENUE-PHASE II
STORM SEWER SYSTEM EXTENSION
CITY OF WINCHESTER, VIRGINIA

DIRECTOR OF PUBLIC UTILITIES _____ DATE

CITY OF WINCHESTER, VIRGINIA

CONSULTING ENGINEERS

PAINTER-LEWIS, P.L.C.
817 Cedar Creek Grade, Suite 120
Winchester, Virginia 22601
Telephone (540) 662-5792
Facsimile (540) 662-5793
Email: office@painterlewis.com

JOB NO.: 1308005
July 1, 2015

SHEET: 1/7

CITY OF WINCHESTER, VA
DEPARTMENT OF PUBLIC UTILITIES

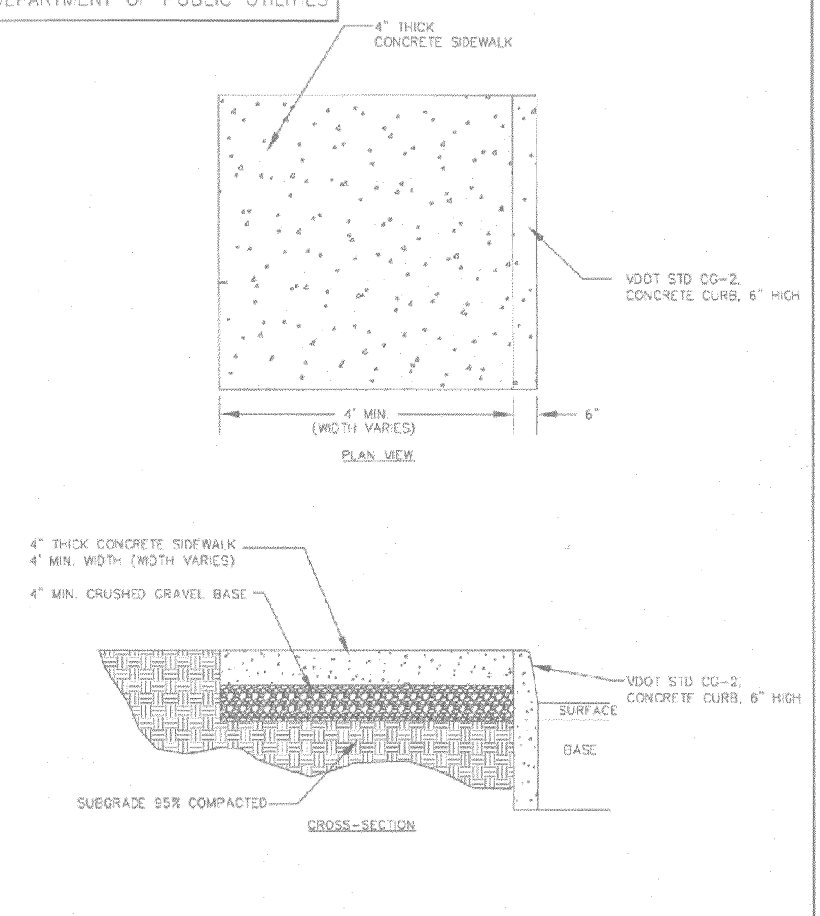

STANDARD DETAIL NO. SW-1	STANDARD CONCRETE SIDEWALK SCALE: NONE	DATE: 4/12

CITY OF WINCHESTER, VA
DEPARTMENT OF PUBLIC UTILITIES

TYPICAL RESILIENT SEAT VALVE INSTALLATION:

VALVE BOX AND BOOT SHALL BE CAST IRON

VALVE BOX COVER SHALL BE MARKED "WATER"

VALVE TOP SHALL BE FLUSH WITH FINISHED GRADE

18" X 18" CONCRETE PAD SHALL BE PLACED AROUND VALVE BOXES LOCATED OUTSIDE OF PAVEMENT AREAS

VALVE BOX SHALL BE SCREW TYPE FOR ADJUSTMENT

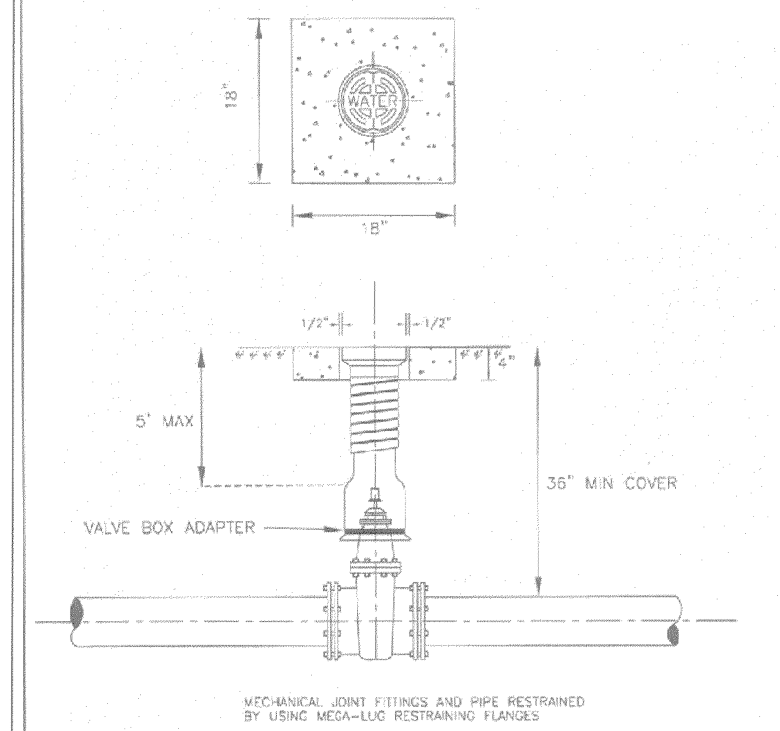

MECHANICAL JOINT FITTINGS AND PIPE RESTRAINED BY USING MEGA-LUG RESTRAINING FLANGES

STANDARD DETAIL NO WD- 8	TYPICAL VALVE & BOX INSTALLATION SCALE: NONE	DATE: 4/12

CITY OF WINCHESTER, VA
DEPARTMENT OF PUBLIC UTILITIES

MFG. BY NEENAH FOUNDRY
CAT. NO. R-1643
FRAME: COMPONENT NO. N1371-0061
LID: COMPONENT NO. N1371-0063
CAST GRAY IRON
ASTM A-48 CLASS 35B
FINISH – NO PAINT

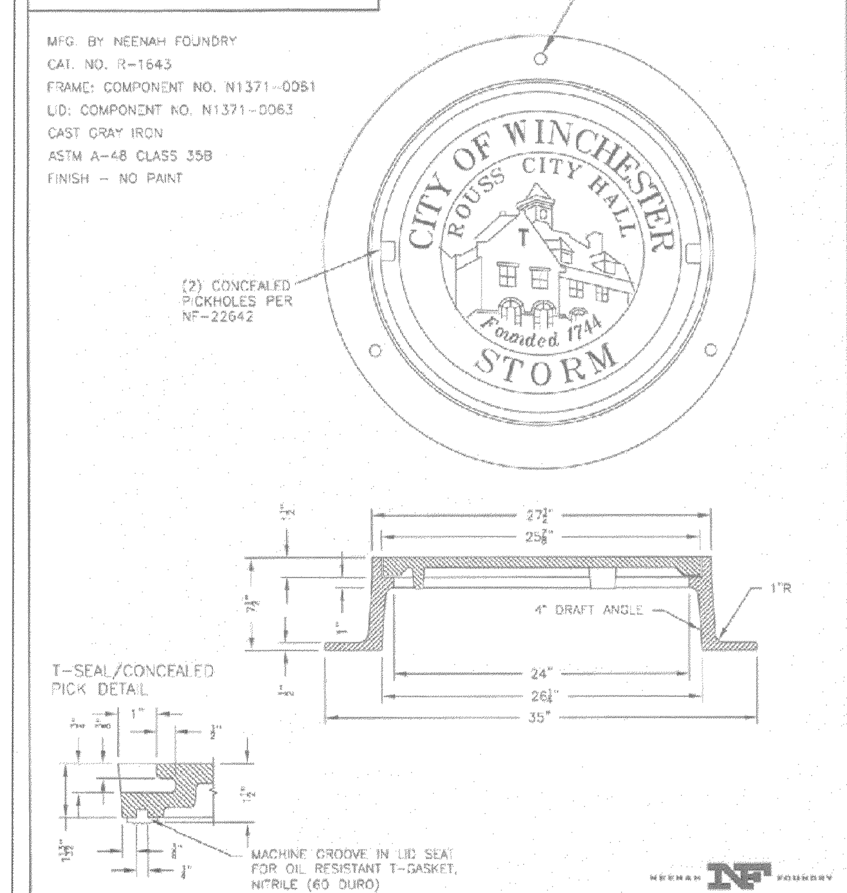

STANDARD DETAIL NO. SD-3	28" STORM MANHOLE LID AND FRAME SCALE: NONE	DATE: 4/12

MH-1

SEE STANDARAD SL-1 FOR APPLICABILITY OF SAFETY SLABS.

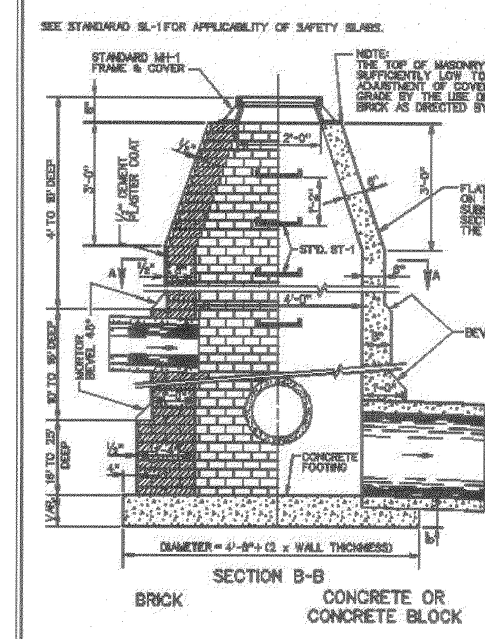

HALF PLAN VIEW

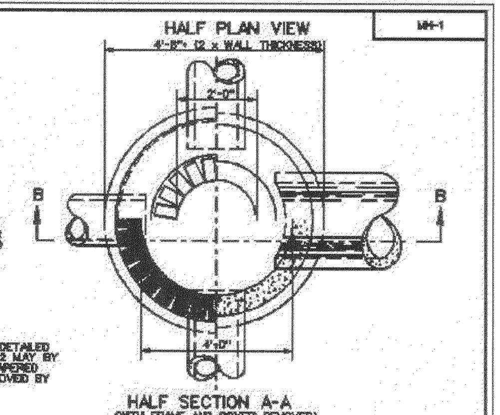

HALF SECTION A-A
(WITH FRAME AND COVER REMOVED)

BRICK CONCRETE

TABLE OF QUANTITIES			
DEPTH	BRICK MANHOLE		CONCRETE MANHOLE
	BRICK	CONCRETE	CONCRETE
FEET	THOUSANDS	CU. YARDS	CU. YARDS
4	0.6	0.785	1.437
5	0.7	0.785	1.699
6	0.9	0.785	1.961
7	1.0	0.785	2.223
8	1.2	0.785	2.485
9	1.4	0.785	2.747
10	1.6	0.785	3.009
11	1.9	0.970	3.455
12	2.2	0.970	3.817
13	2.5	0.970	4.179
14	2.8	0.970	4.541
15	3.1	0.970	4.903
16	3.4	0.970	5.265
17	4.0	1.173	6.032
INCREMENT	0.45	*	0.582

NOTES:
1. QUANTITIES SHOWN ARE FOR MANHOLE WITHOUT PIPES. THE AMOUNT DISPLACED BY PIPES MUST BE DEDUCTED TO OBTAIN TRUE QUANTITIES.
2. A BASE THICKNESS OF 9" WAS USED IN COMPUTING CONCRETE QUANTITIES.
3. INCREMENTS TO BE ADDED FOR EACH ADDITIONAL FOOT OF DEPTH.
4. MATERIALS MAY BE BRICK, CONCRETE OR APPROVED CONCRETE MANHOLE BLOCK.
5. IF BLOCKS ARE USED THE MINIMUM THICKNESS OF SAME IS TO BE 5". OTHER THICKNESSES ARE TO CONFORM TO WALL THICKNESS SHOWN FOR CONCRETE.
6. ALL CONCRETE TO BE CLASS A3.
7. WHEN SPECIFIED ON PLANS THE INVERT IS TO BE SHAPED IN ACCORDANCE WITH STANDARD IS-1. THE COST OF FURNISHING AND PLACING ALL MATERIALS INCIDENTAL TO THE SHAPING IS TO BE INCLUDED IN THE BID PRICE FOR THE STRUCTURE.

SPECIFICATION REFERENCE 302	MANHOLE FOR 12" - 48" PIPE CULVERTS VIRGINIA DEPARTMENT OF TRANSPORTATION	VDOT ROAD AND BRIDGE STANDARDS REVISION DATE · SHEET 1 OF 5 106.01

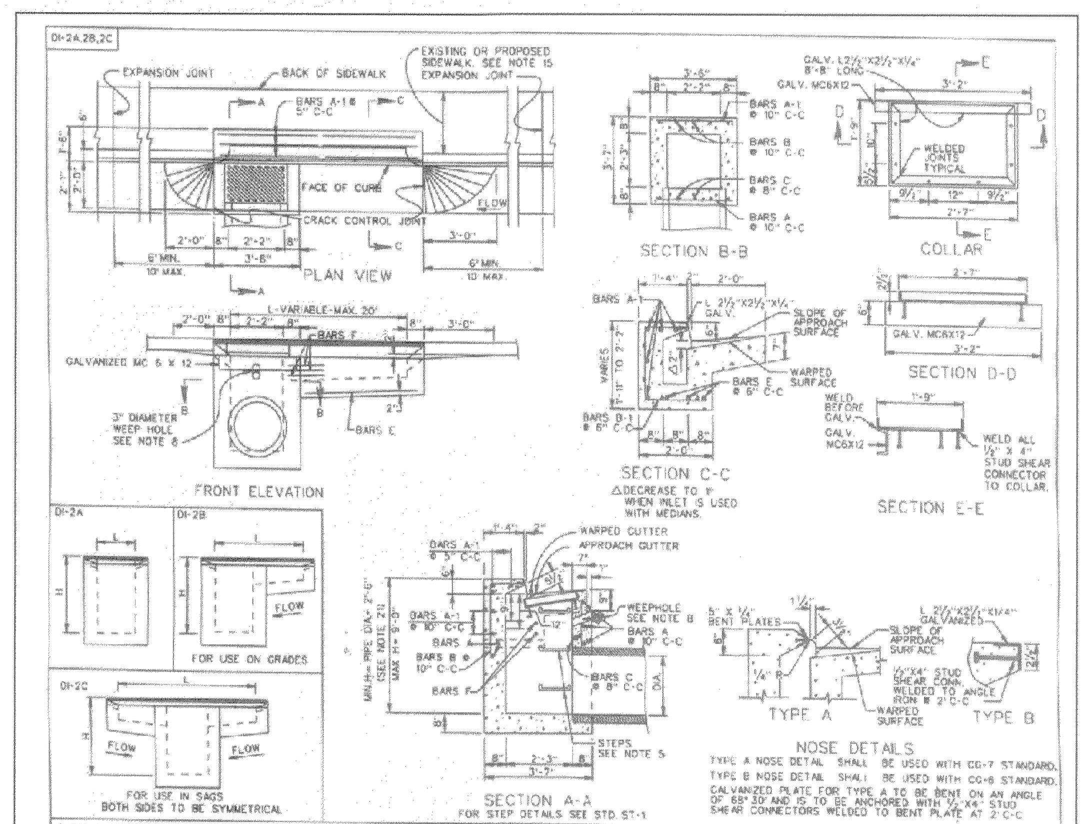

SHEET 1 OF 2 REV. 7/05 104.03	STANDARD CURB DROP INLET 12" - 24" PIPE: MAXIMUM DEPTH (H) = 9' VIRGINIA DEPARTMENT OF TRANSPORTATION	SPECIFICATION REFERENCE 233 302

CITY OF WINCHESTER, VA
DEPARTMENT OF PUBLIC UTILITIES

TYPICAL METER SETTING INCLUDES:
1 – "U" BRANCH FORD MODEL U48-437.5
2 – 5/8" X 3/4" METERS SUPPLIED BY THE CITY OF WINCHESTER
YOKE INLET VALVE – FORD MODEL BA91-223W
YOKE OUTLET VALVE – FORD MODEL HHCA94-323TV
YOKE BARS – FORD Y502
CORPORATION STOP – FORD 1" MODEL FB1000
METER BOX COVER – A.Y. McDONALD MODEL 74M32ARG
METER BOX – 18"x22"x30"H HDPE BULLET BOX

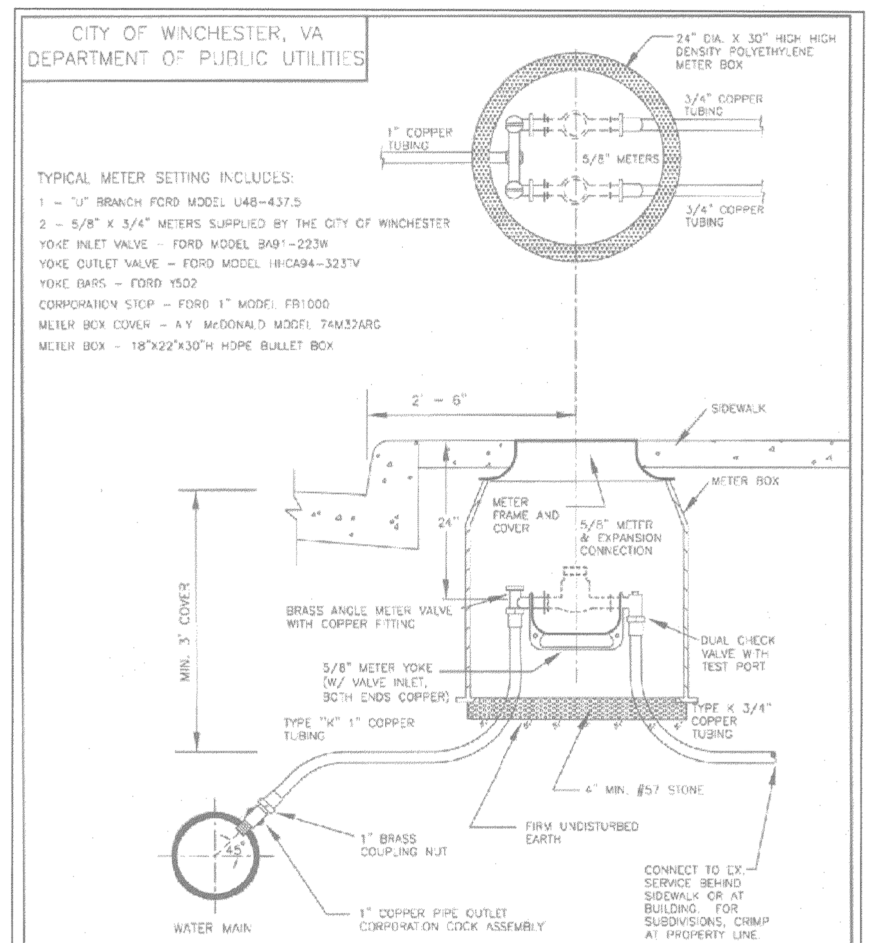

STANDARD DETAIL NO. WD- 2	TYPICAL RESIDENTIAL WATER SERVICE TWIN SETTING 5/8" x 3/4" SCALE: NONE	DATE: 4/12

CITY OF WINCHESTER, VA
DEPARTMENT OF PUBLIC UTILITIES

THE FOLLOWING JOINTS MUST BE RESTRAINED IN ALL APPLICATIONS:
1. BEND – INLET & OUTLET
2. VALVES – INLET & OUTLET
3. TEE – ALL BRANCHES
4. REDUCERS – LARGER PIPE ONLY
5. DEAD ENDS
6. HYDRANT RUNOUTS SHALL BE RESTRAINED AS DEAD ENDS

THRUST RESTRAINT ON SLIP JOINT DUCTILE IRON PIPE SHALL BE MEGALUG SERIES 1700, UNI-FLANGE SERIES 1450, OR APPROVED EQUAL.

THRUST RESTRAINT ON DUCTILE IRON FITTINGS SHALL BE PROVIDED BY THE USE OF MECHANICAL JOINT FITTINGS WITH MEGALUG SERIES 1100 OR UNI-FLANGE SERIES 1400 (OR APPROVED EQUAL).

WATER LINE SHALL ALSO BE SECURED W/THRUST BLOCKING PER CITY OF WINCHESTER STD. DETAILS WD-10 AND WD-11.

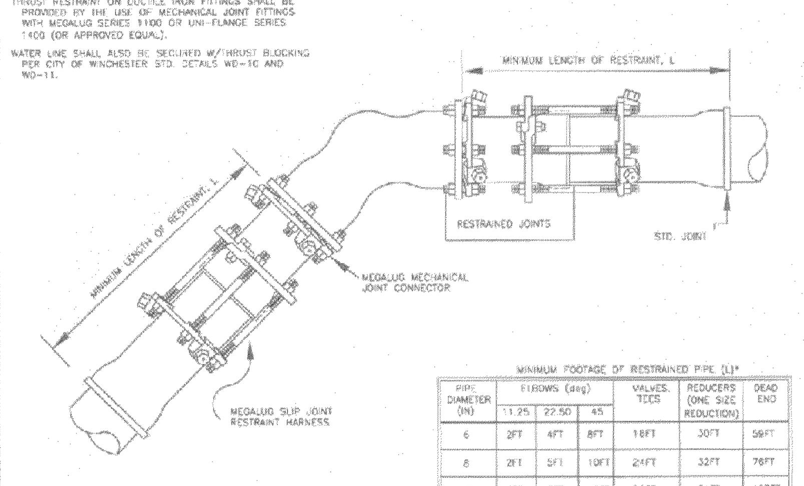

MINIMUM FOOTAGE OF RESTRAINED PIPE (L)*

PIPE DIAMETER (IN)	ELBOWS (deg) 11.25	22.50	45	VALVES, TEES	REDUCERS (ONE SIZE REDUCTION)	DEAD END
6	2FT	4FT	8FT	18FT	30FT	59FT
8	2FT	5FT	10FT	24FT	32FT	76FT
10	3FT	6FT	12FT	28FT	31FT	107FT
12	3FT	7FT	14FT	33FT	31FT	137FT
16	4FT	8FT	17FT	42FT	58FT	137FT
20	5FT	10FT	21FT	58FT	58FT	184FT
24	6FT	11FT	24FT	70FT	57FT	192FT

* FIGURES BASED ON 36 INCH BURIAL DEPTH 150 PSI TEST PRESSURE
*FIGURES BASED ON SOIL BEARING CAPACITY OF 1500 PSF
*FIGURES BASED ON LAYING CONDITION AS SPECIFIED IN THE WINCHESTER STANDARD DETAILS

STANDARD DETAIL NO. WD- 9	DUCTILE IRON PIPE RESTRAINT SCALE: NONE	DATE: 4/12

CITY OF WINCHESTER, VA
DEPARTMENT OF PUBLIC UTILITIES

* WHERE THE TRENCH BOTTOM IS ROCK, IT SHALL BE EXCAVATED TO A MINIMUM OF 8" BELOW THE BOTTOM OF THE PIPE AND BACKFILLED WITH BEDDING MATERIAL FREE OF ROOTS, DEBRIS & STONES
* WHERE SUBGRADE IS UNSTABLE, PIPE SHALL BE BEDDED ON A MINIMUM OF 8" BEDDING MATERIAL

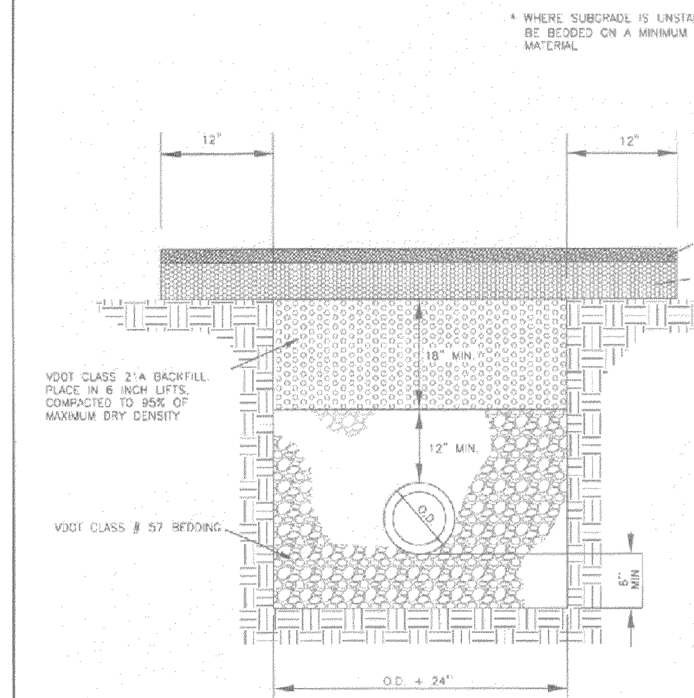

STANDARD DETAIL NO. WS – 2	STANDARD BEDDING DETAIL WITHIN TRAFFIC AREAS (PVC OR DIP) SCALE: NONE	DATE: 4/12

CG-2

NOTES:
1. THIS ITEM MAY BE PRECAST OR CAST IN PLACE.
2. CONCRETE TO BE CLASS A3 IF CAST IN PLACE, 4000 PSI IF PRECAST.
3. CURB HAVING A RADIUS OF 300 FEET OR LESS (ALONG FACE OF CURB) WILL BE PAID FOR AS RADIAL CURB.
4. THE DEPTH OF CURB MAY BE REDUCED AS MUCH AS 3" (15" DEPTH) OR INCREASED AS MUCH AS 3" (21" DEPTH) IN ORDER THAT THE BOTTOM OF CURB WILL COINCIDE WITH THE TOP OF A COURSE OF THE PAVEMENT SUBSTRUCTURE. OTHERWISE, THE DEPTH IS TO BE 18" AS SHOWN. NO ADJUSTMENT IN THE PRICE BID IS TO BE MADE FOR A DECREASE OR AN INCREASE IN DEPTH.
5. CG-2 IS TO BE USED ON ROADWAYS MEETING THE REQUIREMENTS FOR CG-6 AS SHOWN IN APPENDIX A OF THE VDOT ROAD DESIGN MANUAL, IN THE SECTION ON GS URBAN STANDARDS.

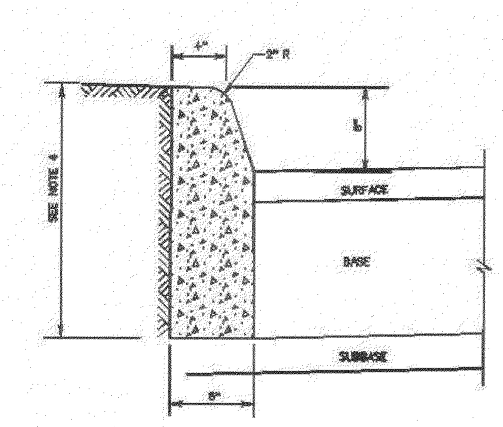

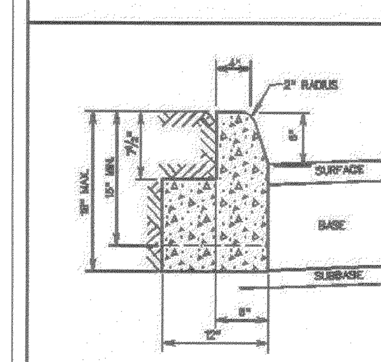

ACCEPTABLE ALTERNATIVE IF CURB IS EXTRUDED

SPECIFICATION REFERENCE 105 502	STANDARD 6" CURB VIRGINIA DEPARTMENT OF TRANSPORTATION	VDOT ROAD AND BRIDGE STANDARDS REVISION DATE · SHEET 1 OF 1 201.01

CG-6

NOTES:
1. THIS ITEM MAY BE PRECAST OR CAST IN PLACE.
2. CONCRETE TO BE CLASS A3 IF CAST IN PLACE, 4000 PSI IF PRECAST.
3. COMBINATION CURB & GUTTER HAVING A RADIUS OF 300 FEET OR LESS (ALONG FACE OF CURB) SHALL BE PAID FOR AS RADIAL COMBINATION CURB & GUTTER.
4. FOR USE WITH STABILIZED OPEN-GRADED DRAINAGE LAYER. THE BOTTOM OF THE CURB & GUTTER SHALL BE CONSTRUCTED PARALLEL TO THE SLOPE OF SUBBASE COURSES AND TO THE DEPTH OF THE PAVEMENT.
5. ALLOWABLE CRITERIA FOR THE USE OF CG-6 IS BASED ON ROADWAY CLASSIFICATION AND DESIGN SPEED AS SHOWN IN APPENDIX A OF THE ROAD DESIGN MANUAL IN THE SECTION ON GS URBAN STANDARDS.

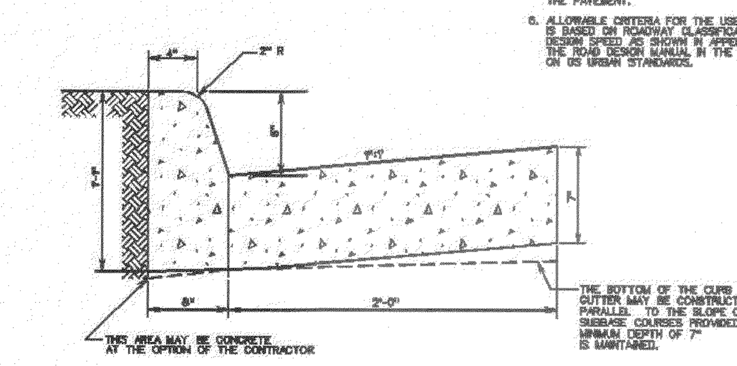

SPECIFICATION REFERENCE 105 502	COMBINATION 6" CURB AND GUTTER VIRGINIA DEPARTMENT OF TRANSPORTATION	VDOT ROAD AND BRIDGE STANDARDS REVISION DATE · SHEET 1 OF 1 201.03

CITY OF WINCHESTER, VA
DEPARTMENT OF PUBLIC UTILITIES

FIRE HYDRANT SHALL BE TRAFFIC MODEL
RESTRAINTS SHALL BE BY MEGA-LUG FLANGES
4 – 1/2" STREAMER NOZZLE SHALL FACE THE ROADWAY

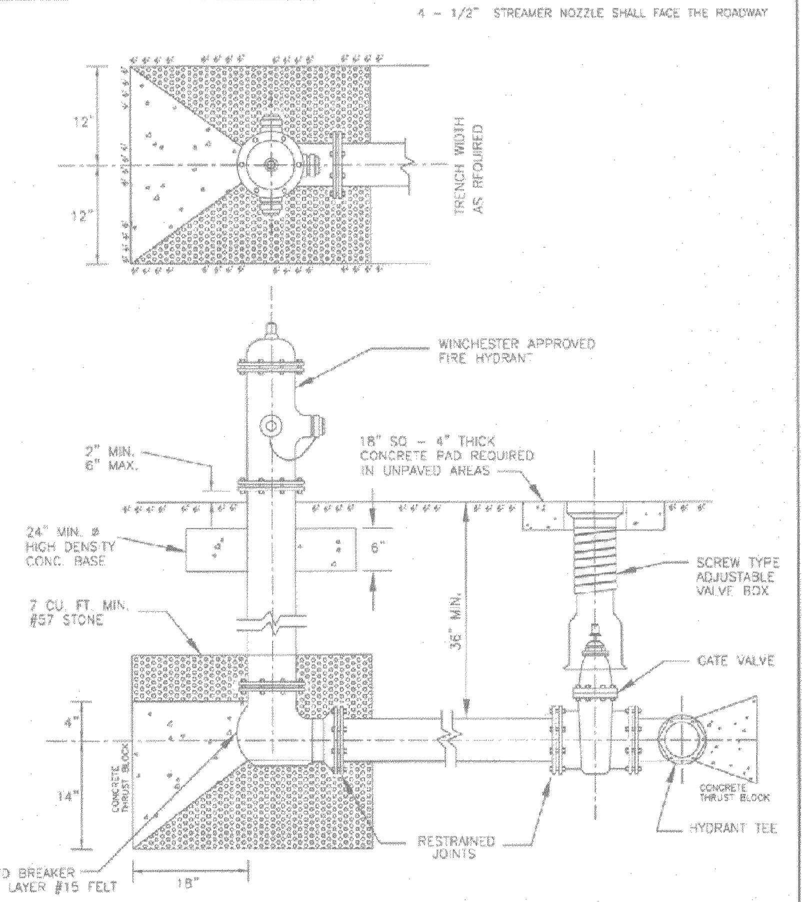

STANDARD DETAIL NO. WD- 7	FIRE HYDRANT INSTALLATION SCALE: NONE	DATE: 4/12

CITY OF WINCHESTER, VA
DEPARTMENT OF PUBLIC UTILITIES

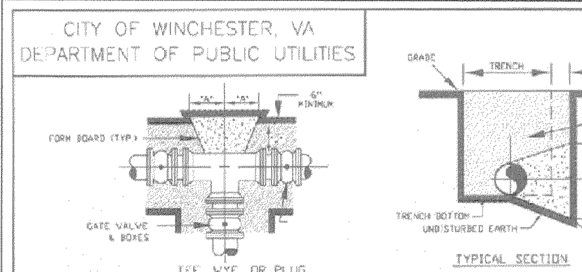

TEE, WYE, OR PLUG

TYPICAL SECTION

IN LIEU OF WOOD FORMING THE FITTING MAY BE WRAPPED WITH POLYETHYLENE, AND THE CONCRETE POURED TO COMPLETELY SURROUNDS THE FITTINGS AND AGAINST UNDISTURBED SOIL. THE BEARING DIMENSIONS AGAINST UNDISTURBED SOIL SHALL REMAIN AS SHOWN.

*DENOTES HAND EXCAVATION
"B" = 12" MIN. FOR 10" AND SMALLER PIPE
"C" = 18" MIN. FOR 12" THRU 20" PIPE
SEE CHART BELOW FOR A,B,C DIMENSIONS.

CONCRETE DIMENSIONS FOR HORIZONTAL THRUST BLOCKS

PIPE DIA	PLUGS, WYES & TEES			11 1/4° AND 22 1/2° BENDS			45° AND 90° BENDS		
---	A	B	C	A	B	C	A	B	C
6"	1'-0"	0'-9"	1'-0"	3'-9"	0'-9"	0'-9"	1'-3"	0'-9"	1'-9"
8"	1'-3"	0'-9"	1'-3"	3'-9"	0'-9"	0'-9"	1'-6"	0'-9"	2'-3"
10"	1'-6"	0'-9"	1'-6"	1'-0"	0'-9"	1'-3"	1'-9"	0'-9"	2'-6"
12"	1'-9"	1'-0"	2'-6"	1'-3"	1'-0"	1'-6"	2'-0"	1'-0"	3'-0"
14"	2'-0"	1'-0"	3'-0"	1'-3"	1'-0"	1'-6"	2'-6"	1'-0"	4'-2"
16"	2'-3"	1'-0"	3'-6"	1'-6"	1'-0"	2'-0"	2'-9"	1'-0"	4'-6"
18"	2'-6"	1'-3"	3'-9"	1'-6"	1'-3"	2'-0"	3'-0"	1'-3"	4'-9"
20"	2'-9"	1'-6"	4'-0"	1'-9"	1'-6"	2'-0"	3'-3"	1'-6"	5'-0"

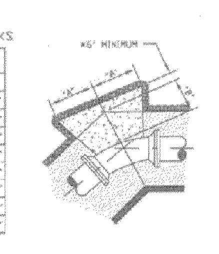

11 1/4 THRU 90° BENDS

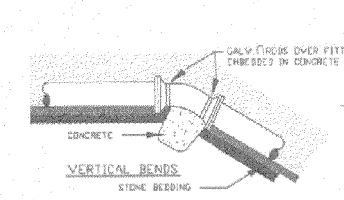

VERTICAL BENDS

THRUST BLOCKS FOR VERTICAL UP BENDS SHALL BE THE SAME AS FOR HORIZONTAL BENDS.

FITTING SIZE	ROD SIZE	NO. RODS	EMBEDMENT
12" & LESS	6	2	30"
14"-20"	8	2	36"

FITTING SIZE	VOLUME OF THRUST BLOCK IN CU.YD. 11-1/4°	22-1/2°	45°	90°
6"	-	-	-	1.3
8"	-	-	1.1	2.3
10"	-	-	1.8	3.7
12"	-	1.2	2.8	5.5
14"	0.5	1.7	3.9	7.6
16"	0.9	2.3	5.1	-
18"	1.4	3.2	6.3	-
20"	2.2	4.5	7.8	-

* WATER LINE SHALL ALSO BE SECURED W/JOINT RESTRAINTS PER CITY OF WINCHESTER STD. DETAIL WD-9

STANDARD DETAIL NO. WD-10	CONCRETE THRUST BLOCKING SCALE: NONE	DATE: 4/12

CITY OF WINCHESTER, VA
DEPARTMENT OF PUBLIC UTILITIES

* WHERE THE TRENCH BOTTOM IS ROCK, IT SHALL BE EXCAVATED TO A MINIMUM OF 8" BELOW THE BOTTOM OF THE PIPE AND BACKFILLED WITH BEDDING MATERIAL FREE OF ROOTS, DEBRIS & STONES
* WHERE SUBGRADE IS UNSTABLE, PIPE SHALL BE BEDDED ON A MINIMUM OF 8" BEDDING MATERIAL

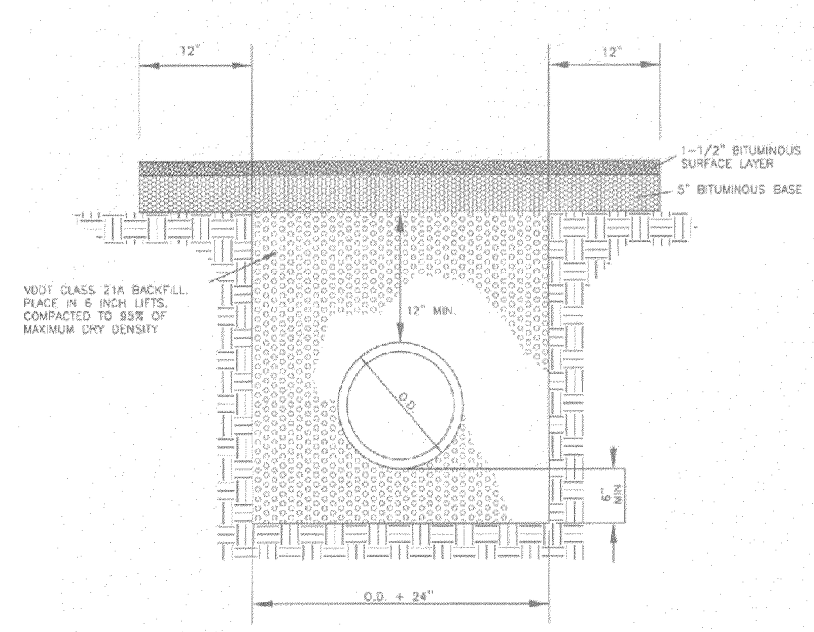

STANDARD DETAIL NO. SD – 1	CONCRETE STORM DRAIN BEDDING WITHIN TRAFFIC AREAS (RCP) SCALE: NONE	DATE: 4/12

REVISIONS			
NO.	DATE	DESCRIPTION	BY

TITLE: CONSTRUCTION DETAILS

PROJECT: VALLEY AVENUE–PHASE II
STORM SEWER SYSTEM EXTENSION
CITY OF WINCHESTER, VIRGINIA

PAINTER-LEWIS, P.L.C.
817 Cedar Creek Grade, suite 120
Winchester, Virginia 22601
Telephone: 540-662-5792
Facsimile: 540-662-5793
Email: office@painterlewis.com
CONSULTING ENGINEERS

COMMONWEALTH OF VIRGINIA
JOHN C. LEWIS
Lic. No. 021621
PROFESSIONAL ENGINEER

SURVEY: P-L	C.I.: 1'
DRAWN BY: P-L	JOB NO.: 1308005
SCALE: SHOWN	DATE: 04/27/15
SHEET:	2/7

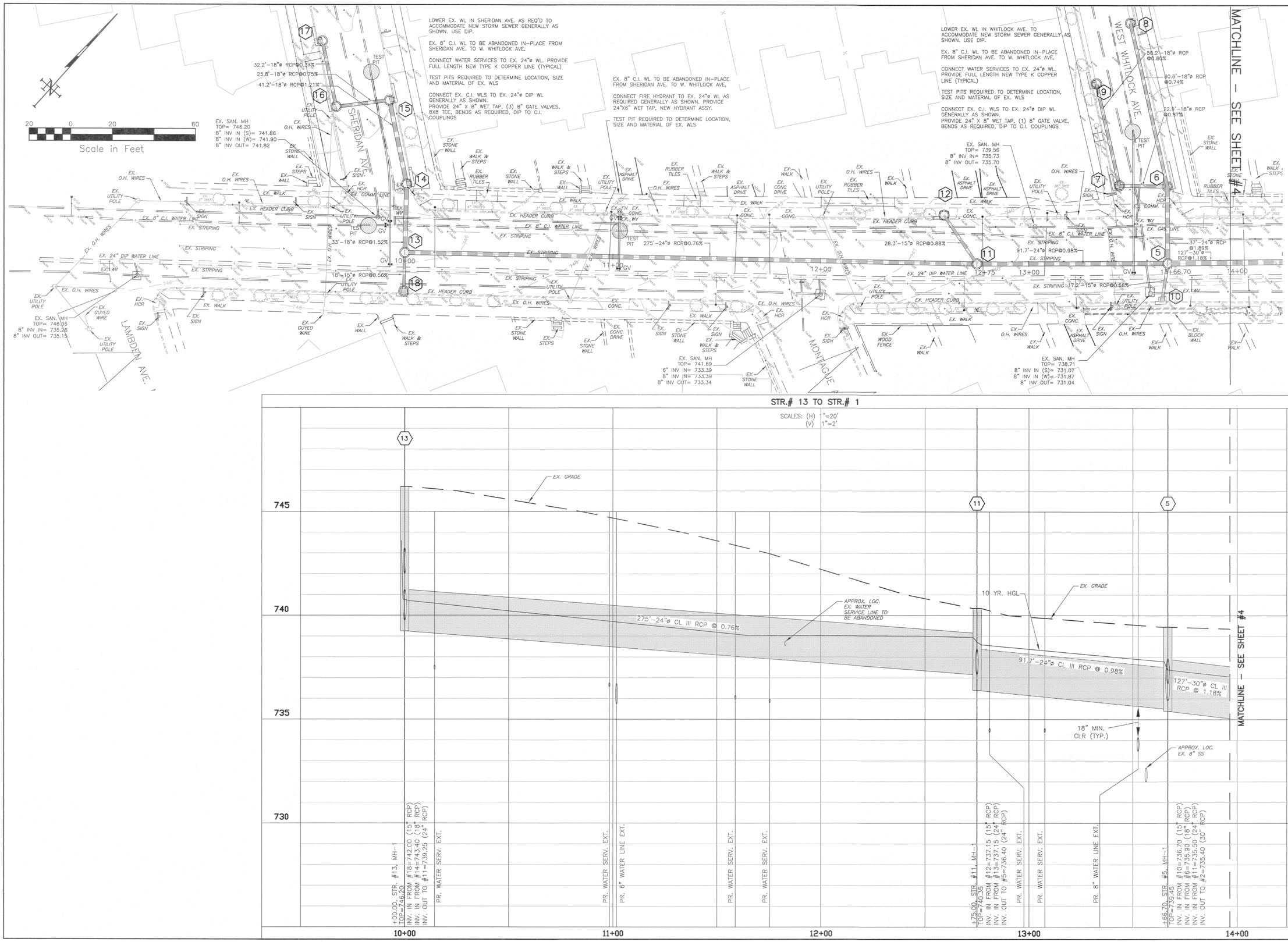

NO.	DATE	DESCRIPTION	BY

REVISIONS

TITLE: STORM SEWER PLAN & PROFILE STR 5–STR 11–STR 13

PROJECT: VALLEY AVENUE–PHASE II STORM SEWER SYSTEM EXTENSION CITY OF WINCHESTER, VIRGINIA

PAINTER-LEWIS, P.L.C.
817 Cedar Creek Grade, suite 120
Winchester, Virginia 22601
Telephone: 540-662-5792
Facsimile: 540-662-5793
Email: office@painterlewis.com
CONSULTING ENGINEERS

COMMONWEALTH OF VIRGINIA
JOHN C. LEWIS
Lic. No. 021621
PROFESSIONAL ENGINEER

SURVEY: P-L	C.I.: 1'
DRAWN BY: P-L	JOB NO.: 1308005
SCALE: SHOWN	DATE: 04/27/15
SHEET:	3/7

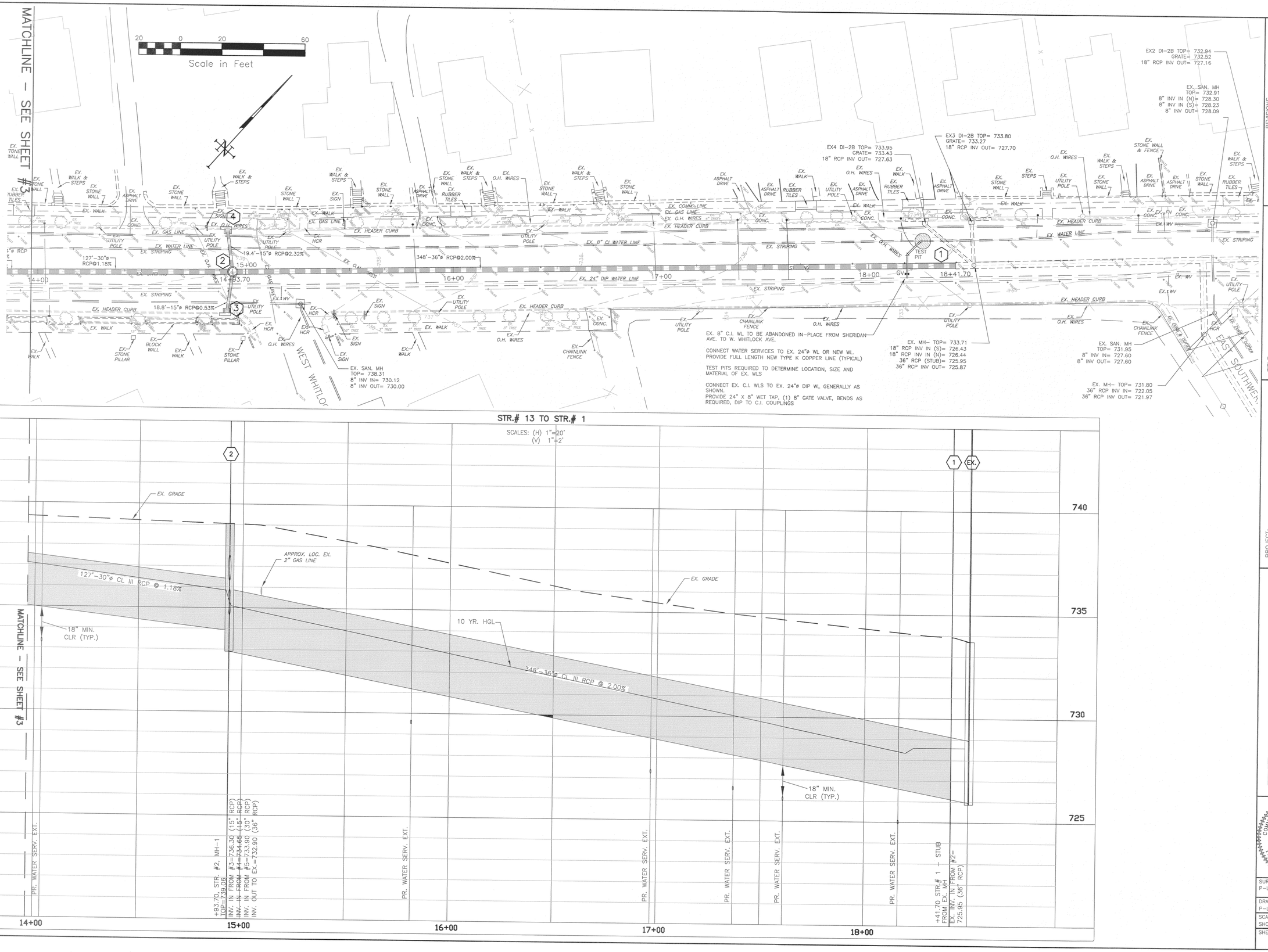

REVISIONS

NO.	DATE	DESCRIPTION	BY

TITLE: STORM SEWER PLAN & PROFILE STR EX 1–STR 2

PROJECT: VALLEY AVENUE–PHASE II STORM SEWER SYSTEM EXTENSION CITY OF WINCHESTER, VIRGINIA

PAINTER-LEWIS, P.L.C.
817 Cedar Creek Grade, suite 120
Winchester, Virginia 22601
Telephone: 540-662-5792
Facsimile: 540-662-5793
Email: office@painterlewis.com
CONSULTING ENGINEERS

COMMONWEALTH OF VIRGINIA
JOHN C. LEWIS
Lic. No. 021621
PROFESSIONAL ENGINEER

SURVEY: P-L	C.I.: 1"
DRAWN BY: P-L	JOB NO.: 1308005
SCALE: SHOWN	DATE: 04/27/15
SHEET:	4/7

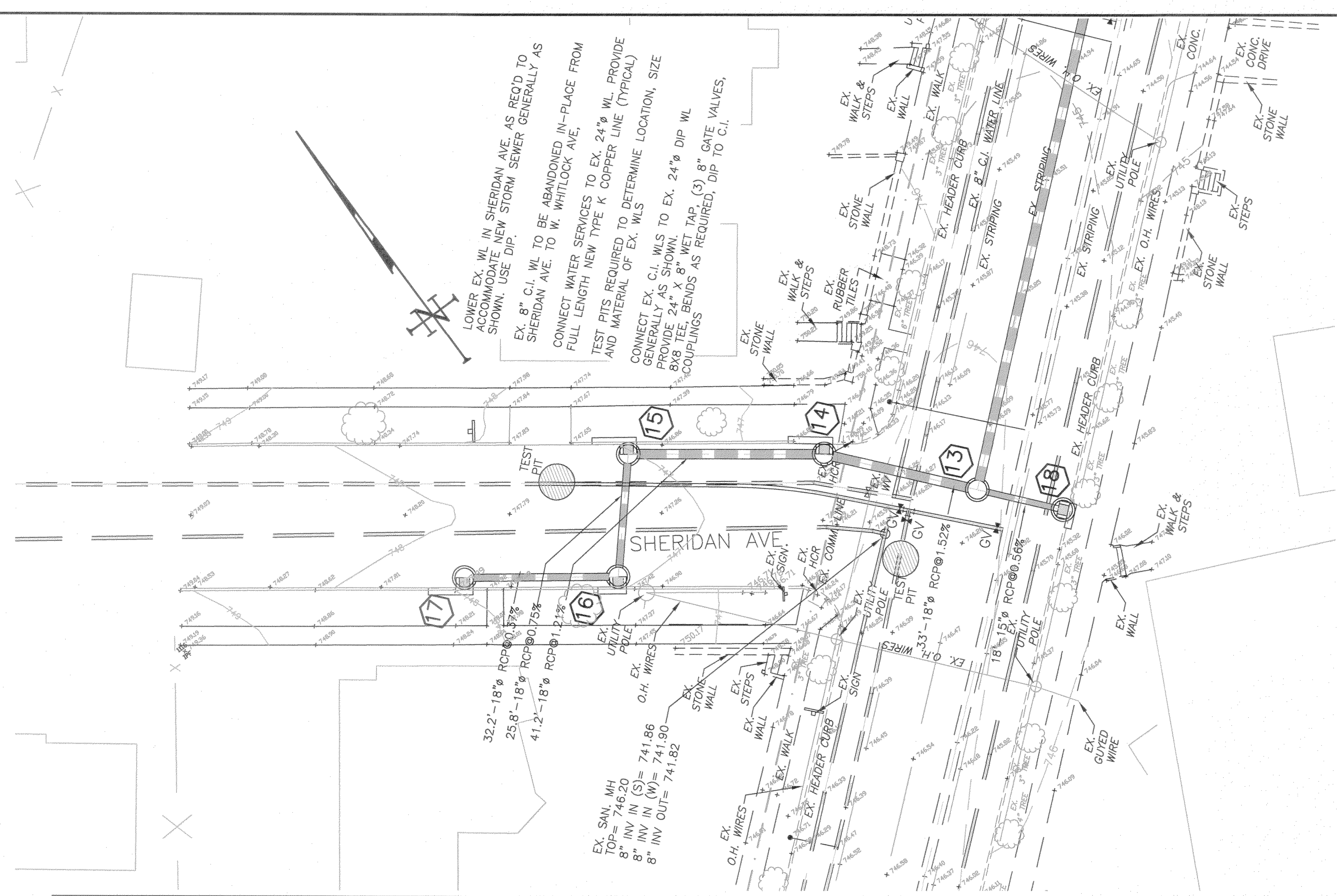

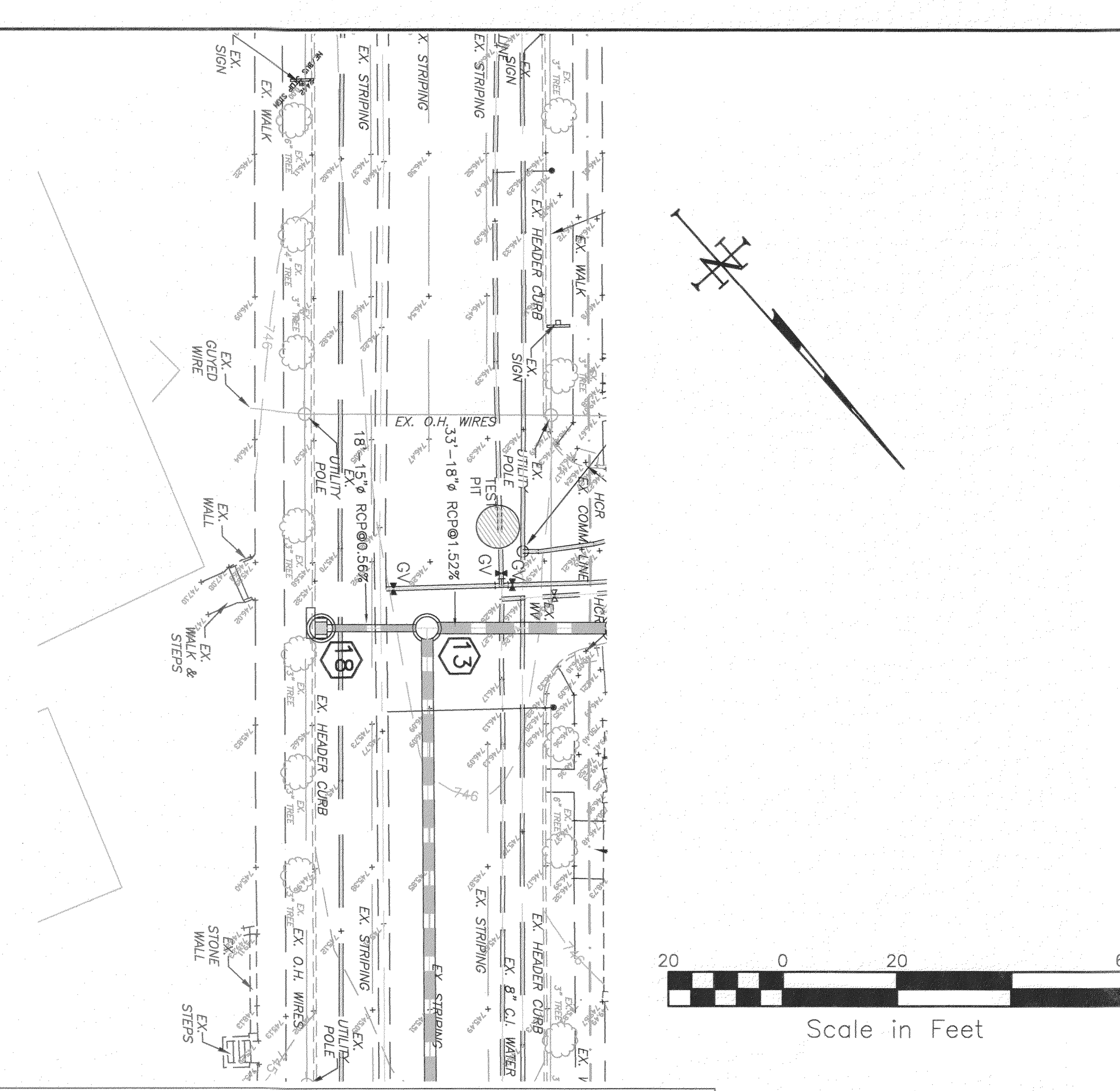

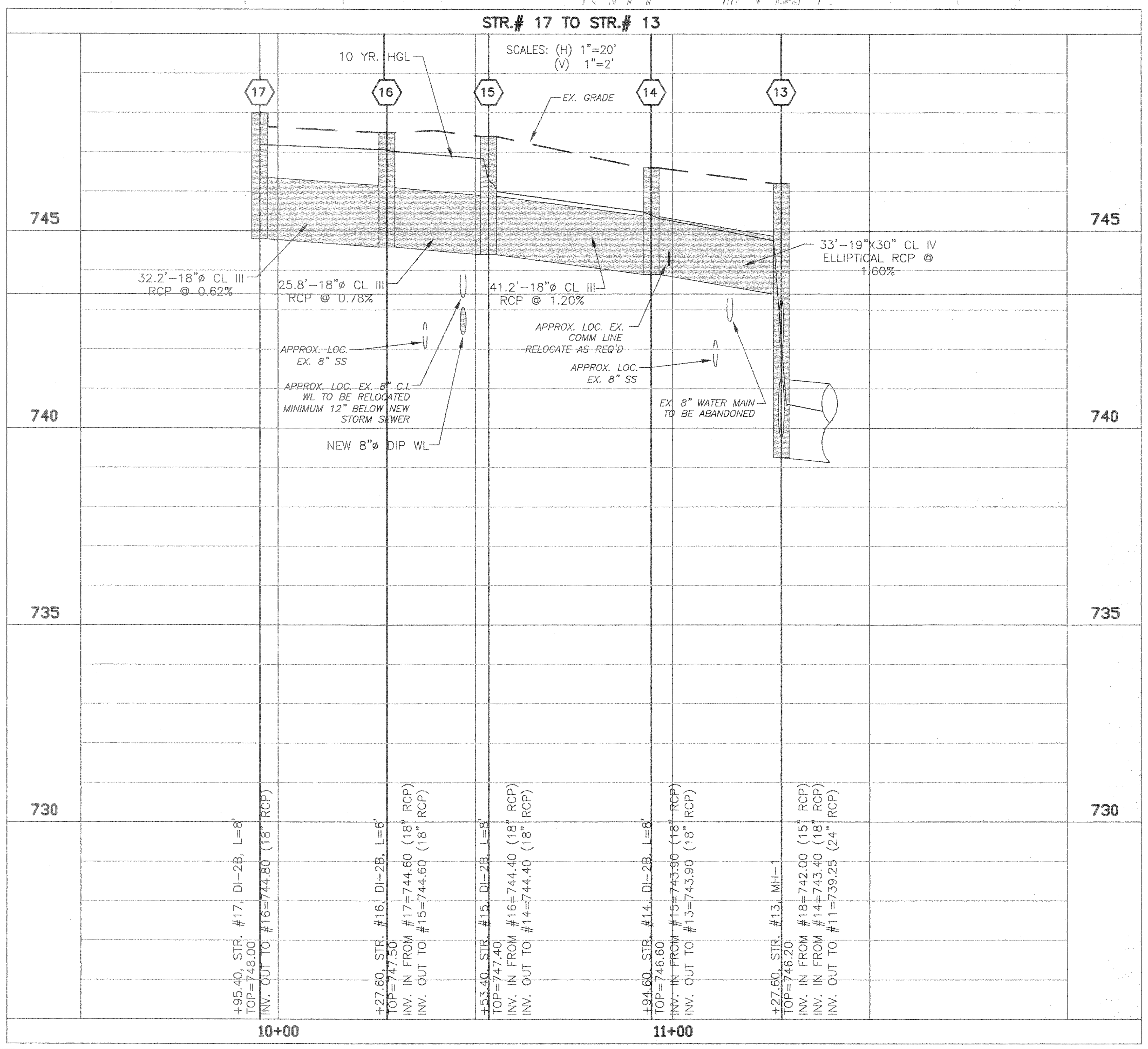

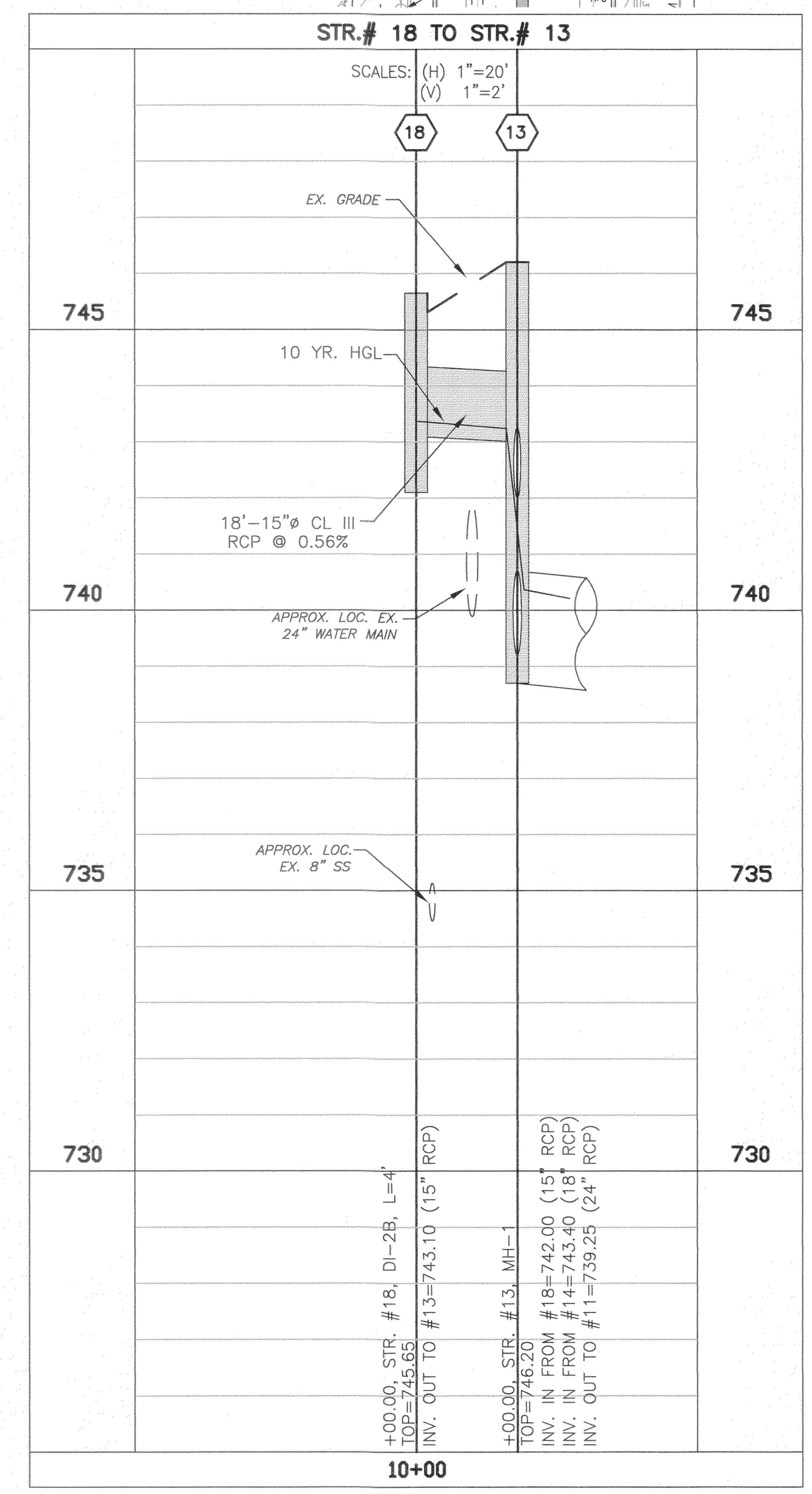

NO.	DATE	REVISIONS DESCRIPTION	BY

TITLE:
STORM SEWER PLAN & PROFILE
STR 18-STR 13
STR 17-STR 16-STR 15-STR 14-STR 13

PROJECT:
VALLEY AVENUE-PHASE II
STORM SEWER SYSTEM EXTENSION
CITY OF WINCHESTER, VIRGINIA

PAINTER-LEWIS, P.L.C.
817 Cedar Creek Grade, suite 120
Winchester, Virginia 22601
Telephone: 540-662-5792
Facsimile: 540-662-5793
Email: office@painterlewis.com
CONSULTING ENGINEERS

COMMONWEALTH OF VIRGINIA
JOHN C. LEWIS
Lic. No. 021621
PROFESSIONAL ENGINEER

SURVEY: P-L C.I.: 1'
DRAWN BY: P-L JOB NO.: 1308005
SCALE: SHOWN DATE: 04/27/15
SHEET: 5/7

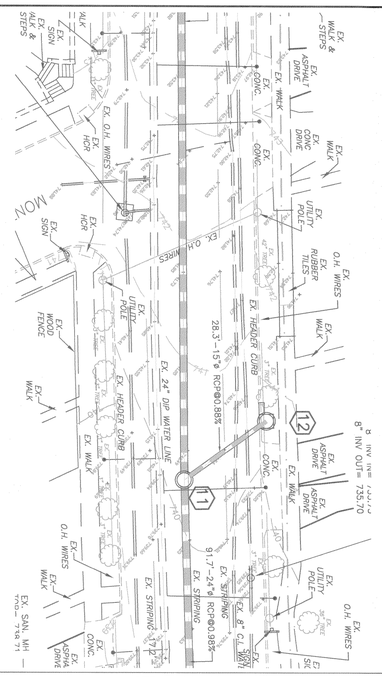

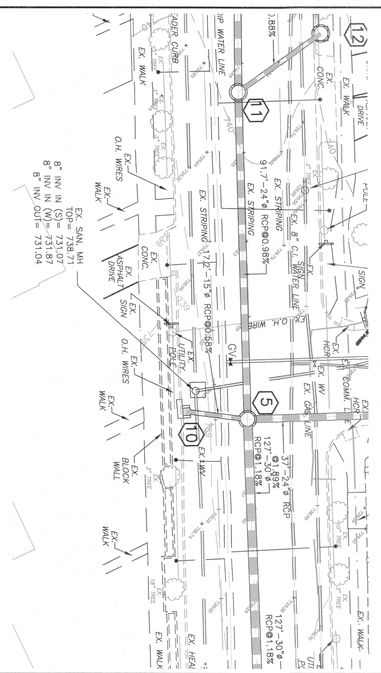

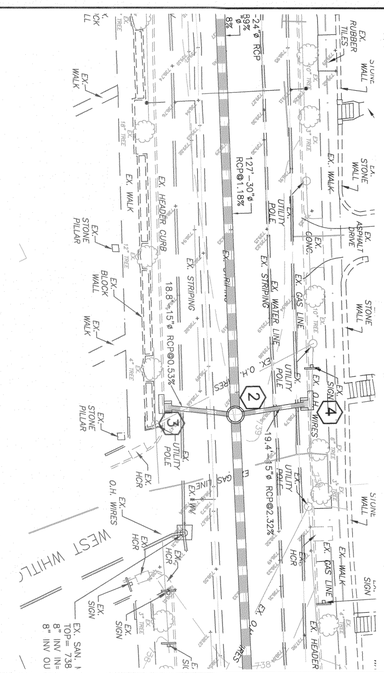

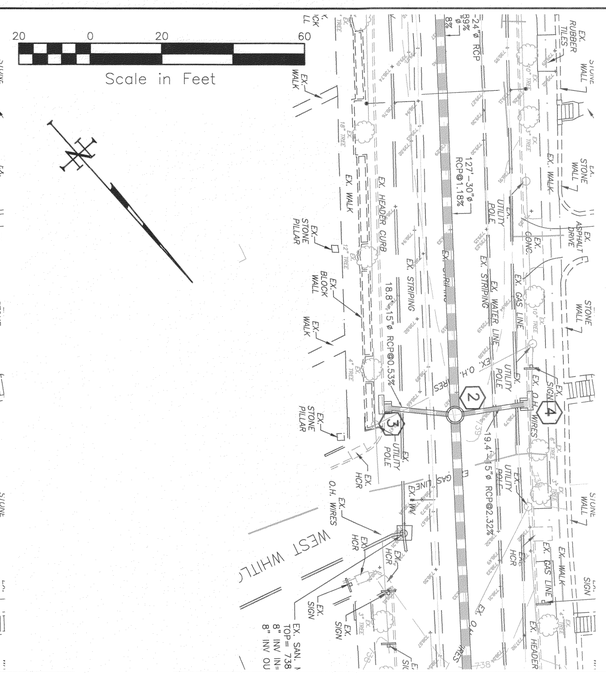

Scale in Feet: 20 0 20 60

STR.# 12 TO STR.# 11

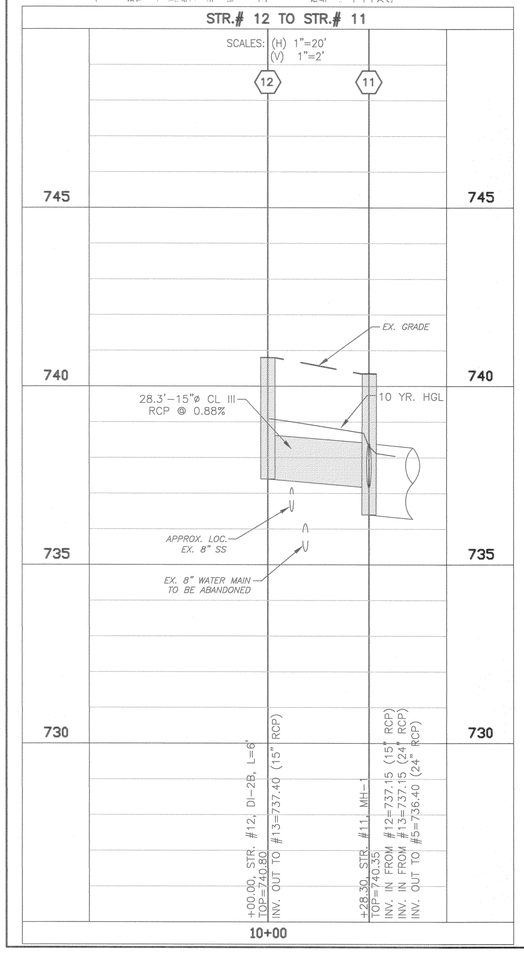

STR.# 10 TO STR.# 5

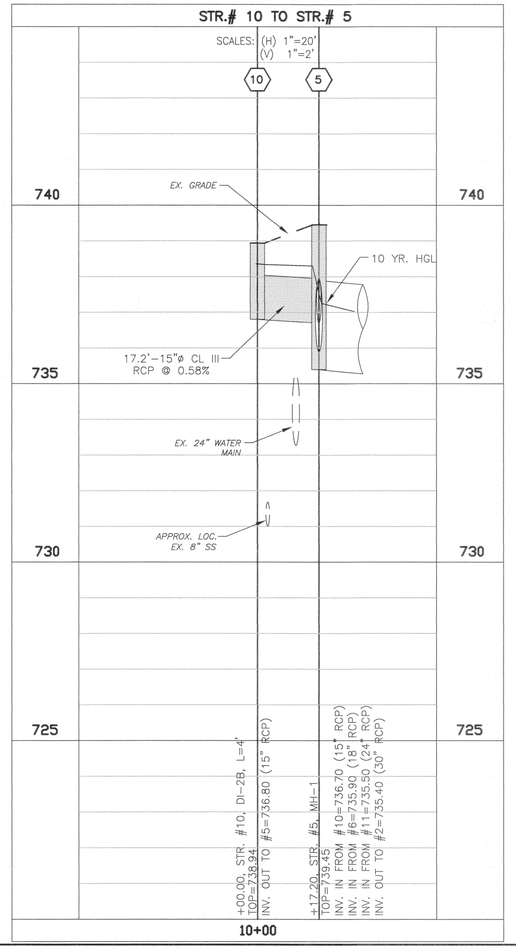

STR.# 4 TO STR.# 2

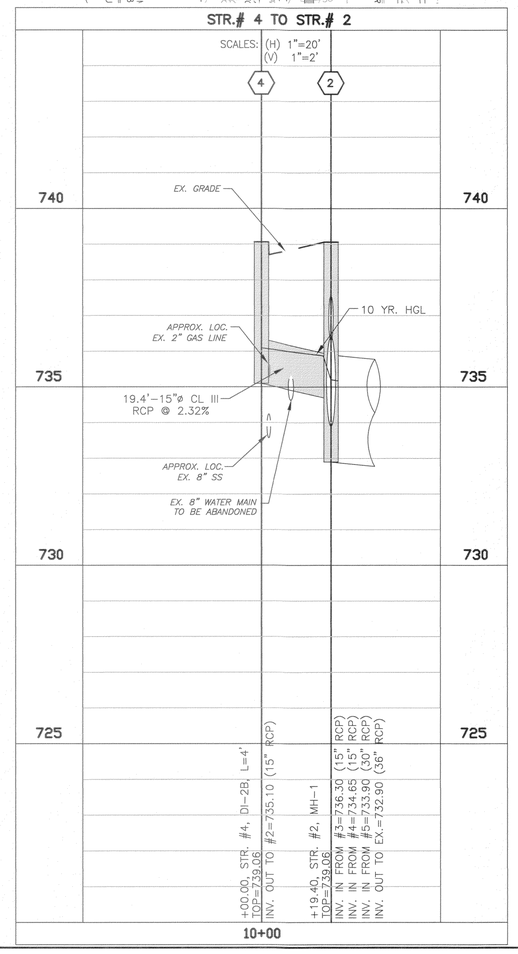

STR.# 3 TO STR.# 2

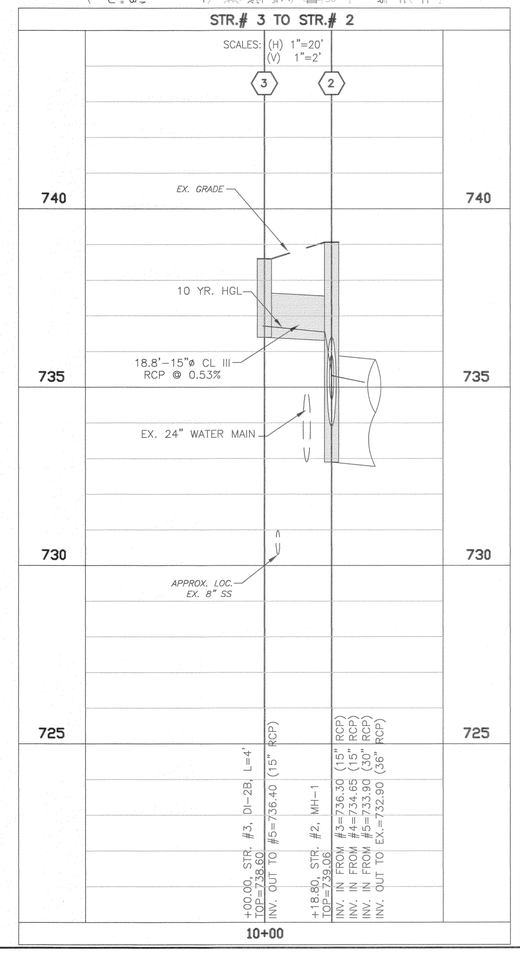

NO.	DATE	DESCRIPTION	BY

REVISIONS

TITLE: STORM SEWER PLAN & PROFILE
STR 3–STR 2, STR 2–STR 2
STR 10–STR 5, STR 12–STR 11

PROJECT: VALLEY AVENUE–PHASE II
STORM SEWER SYSTEM EXTENSION
CITY OF WINCHESTER, VIRGINIA

PAINTER-LEWIS, P.L.C.
817 Cedar Creek Grade, suite 120
Winchester, Virginia 22601
Telephone: 540–662–5792
Facsimile: 540–662–5793
Email: office@painterlewis.com
CONSULTING ENGINEERS

COMMONWEALTH OF VIRGINIA
JOHN C. LEWIS
Lic. No. 021621
PROFESSIONAL ENGINEER

SURVEY: P–L	C.I.: 1'
DRAWN BY: P–L	JOB NO.: 1308005
SCALE: SHOWN	DATE: 04/27/15
SHEET:	6/7

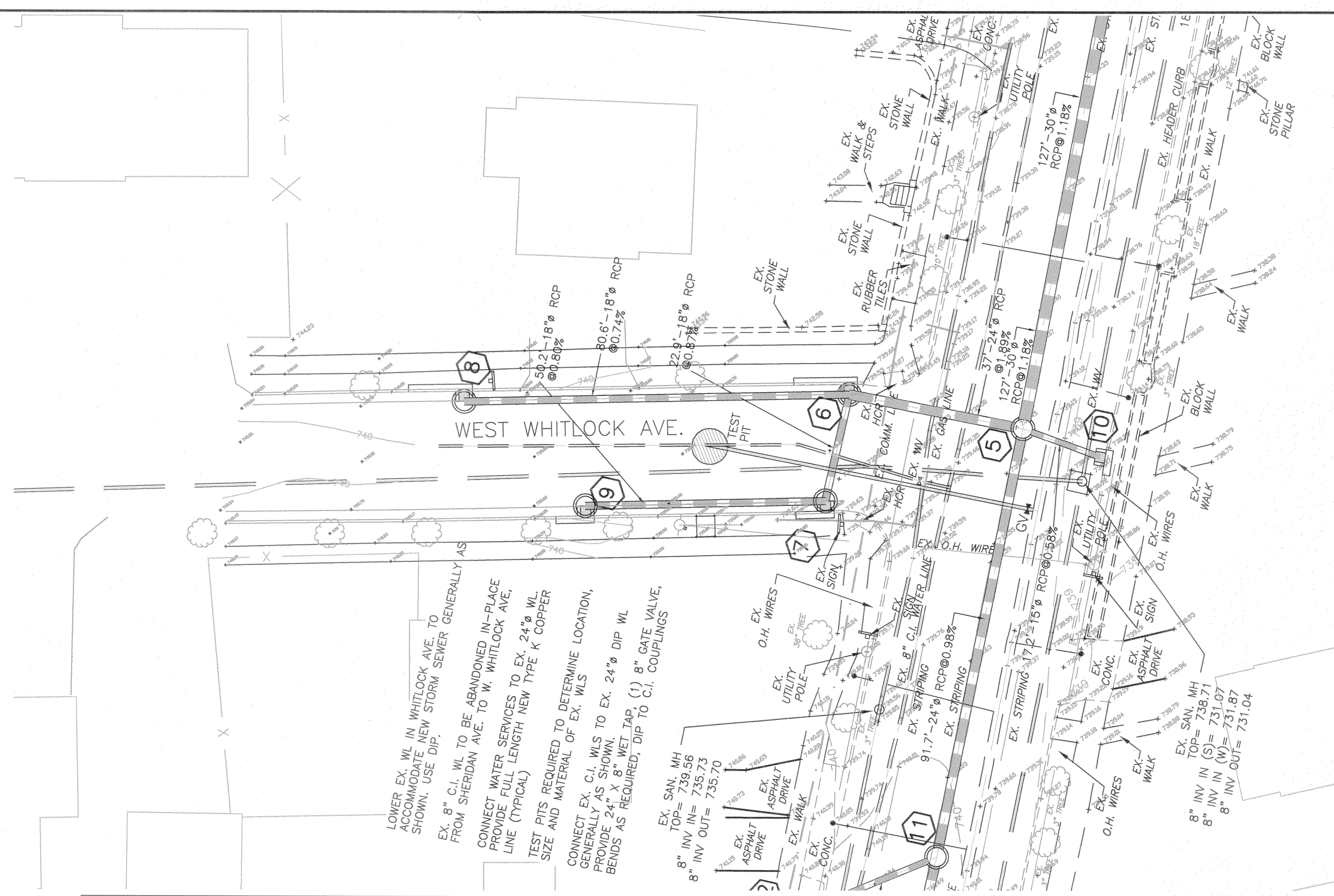

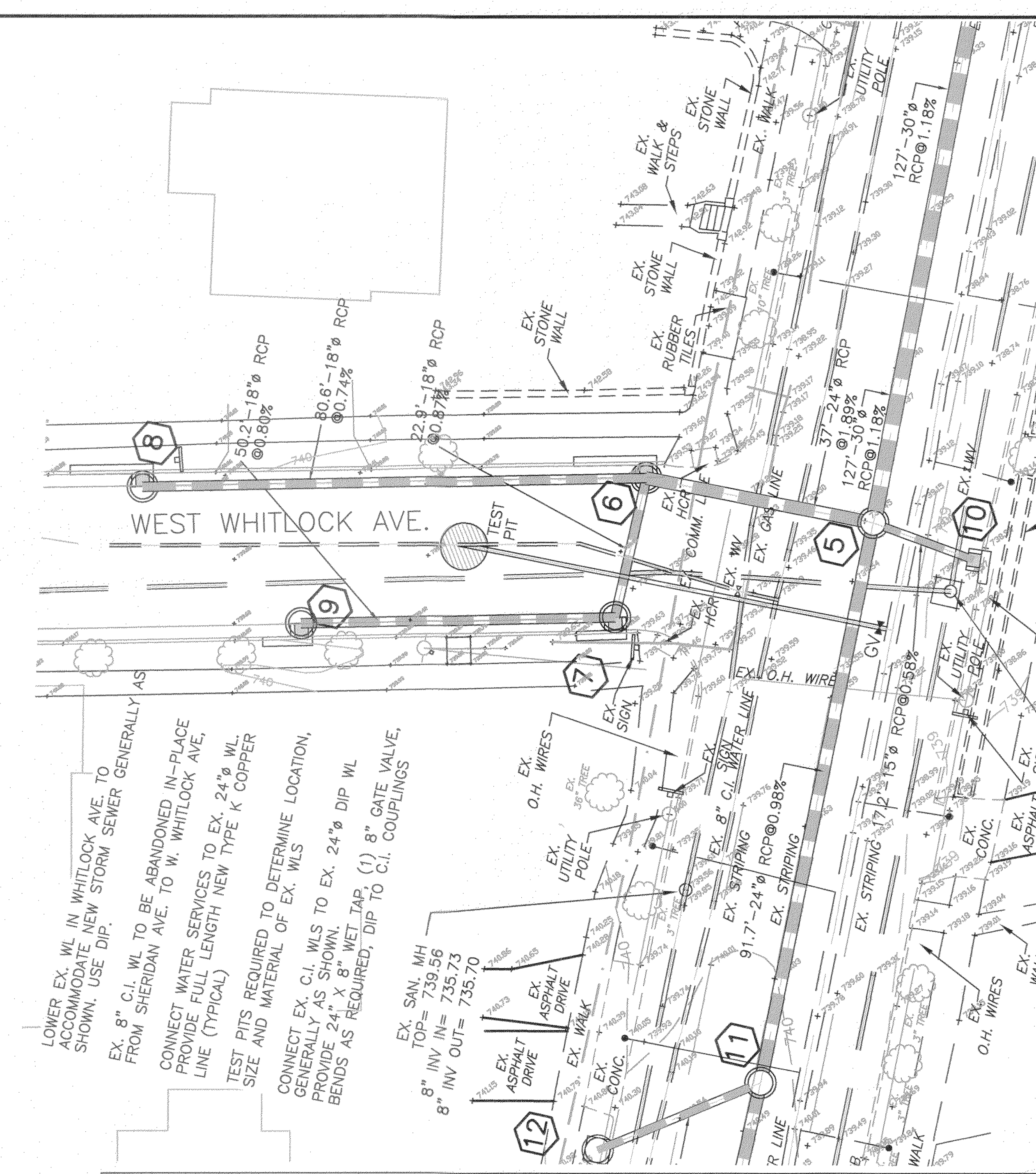

20 0 20 60
Scale in Feet

STR.# 8 TO STR.# 5

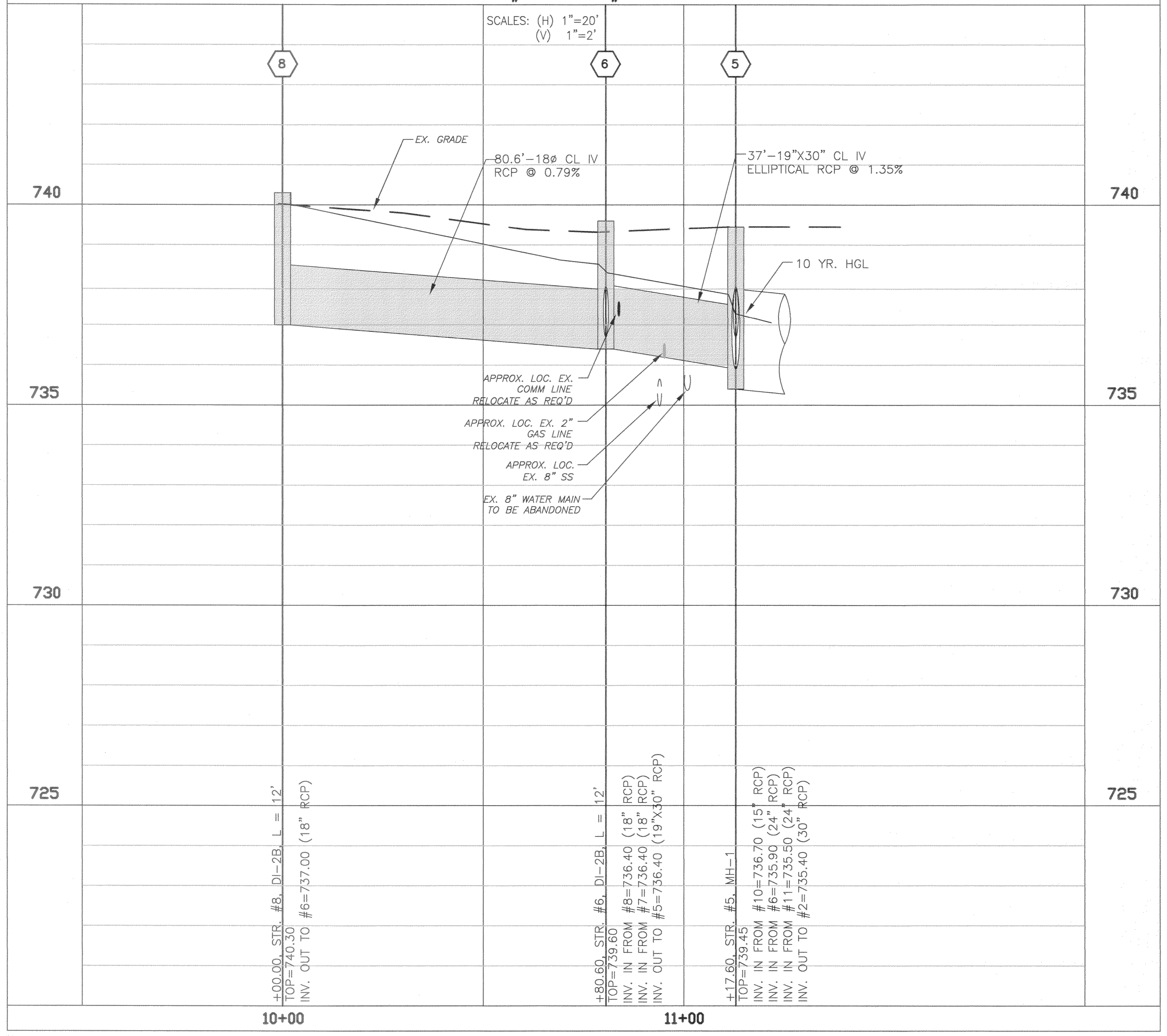

STR.# 9 TO STR.# 6

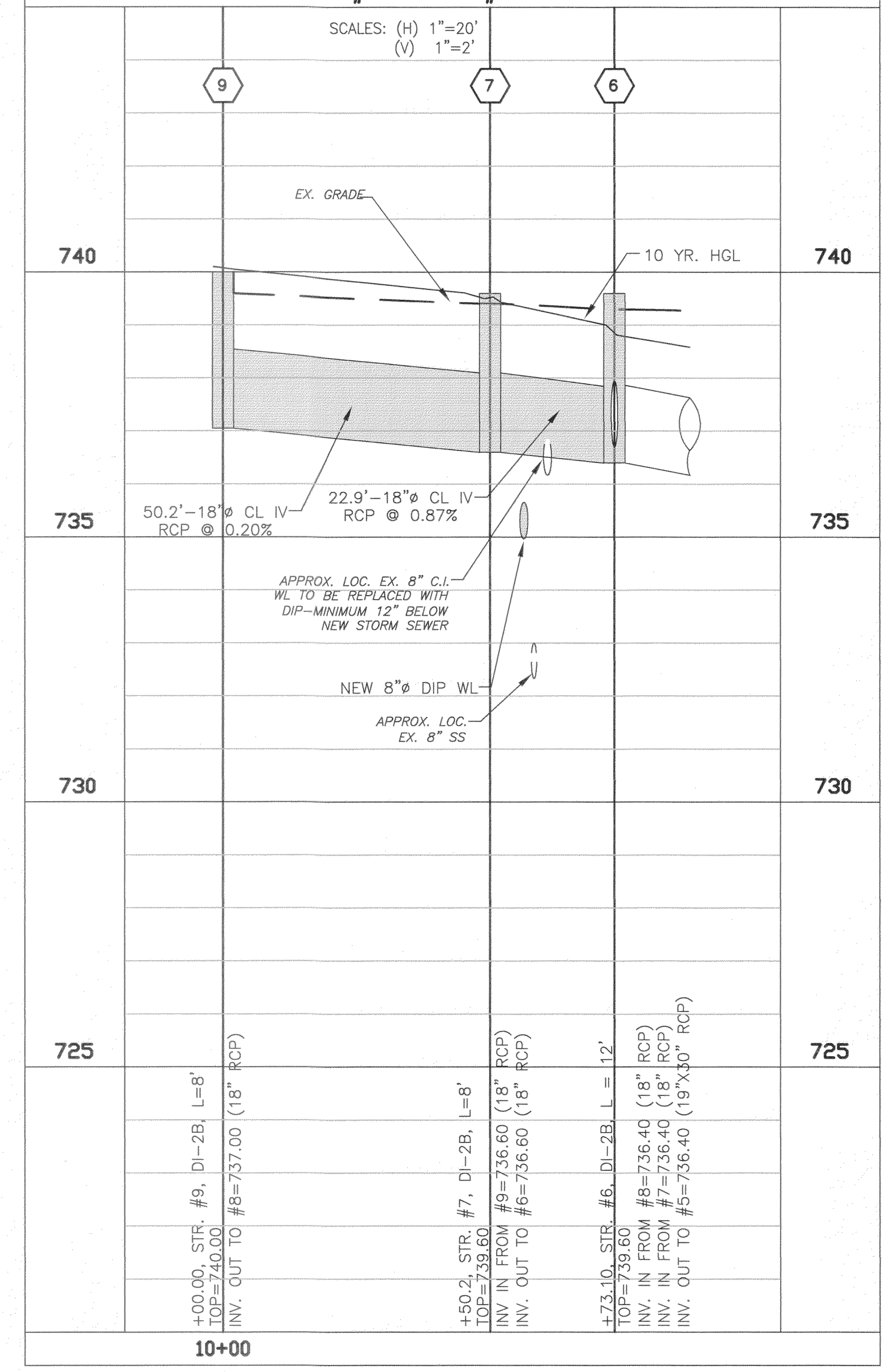

REVISIONS		
NO.	DATE	DESCRIPTION	BY

TITLE:
STORM SEWER PLAN & PROFILE
STR 9-STR 8-STR 6-STR 5
STR 7-STR 6

PROJECT:
VALLEY AVENUE-PHASE II
STORM SEWER SYSTEM EXTENSION
CITY OF WINCHESTER, VIRGINIA

PAINTER-LEWIS, P.L.C.
817 Cedar Creek Grade, suite 120
Winchester, Virginia 22601
Telephone: 540-662-5792
Facsimile: 540-662-5793
Email: office@painterlewis.com
CONSULTING ENGINEERS

COMMONWEALTH OF VIRGINIA
JOHN C. LEWIS
Lic. No. 021621
PROFESSIONAL ENGINEER

SURVEY: P-L	C.I.: 1'
DRAWN BY: P-L	JOB NO.: 1308005
SCALE: SHOWN	DATE: 04/27/15
SHEET:	7/7