CITY OF WINCHESTER
DEPARTMENT OF PUBLIC SERVICES

STOTHERS LANE GROUND STORAGE TANK REPLACEMENT

INVITATION TO BID NO 201901
JANUARY 2019

LOCATION MAP
1" = 2000'

Hazen

HAZEN AND SAWYER
1555 ROSENEATH ROAD
RICHMOND, VIRGINIA 23230
PHONE: 804-266-1400

OWNER:

CITY OF WINCHESTER
DEPARTMENT OF PUBLIC SERVICES
ROUSS CITY HALL
15 NORTH CAMERON STREET
WINCHESTER, VA 22601

CONSTRUCTION SET

GENERAL NOTES

1. ALL EXISTING INFORMATION SHOWN ON THESE DRAWINGS INCLUDING LOCATION, DIMENSIONS, ELEVATIONS, AND CONFIGURATIONS IS DERIVED FROM THE TOPOGRAPHIC SURVEY AND BOUNDARY SURVEY OF TAX MAP NO. 132-1-1 PERFORMED BY TRIAD ENGINEERING AND DATED JANUARY 29, 2018.

2. THE BASIS OF COORDINATES AND DATUM IS NAD83 / NAVD88

3. CONTRACTOR SHALL VERIFY FIELD CONDITIONS BEFORE COMMENCEMENT OF ANY DEMOLITION OR CONSTRUCTION ACTIVITIES. CONTRACTOR SHALL VERIFY EXISTING ELEVATIONS AND DIMENSIONS WHERE NEW WORK WILL MATCH EXISTING. DISCREPANCIES SHALL BE BROUGHT TO THE ATTENTION OF THE ENGINEER FOR RESOLUTION PRIOR TO THE COMMENCEMENT OF WORK.

4. CITY HAS PAID FOR AND OBTAINED A BUILDING PERMIT. CONTRACTOR SHALL OBTAIN ALL OTHER NECESSARY PERMITS FROM THE APPROPRIATE AUTHORITIES, DEPARTMENTS, AND/OR AGENCIES HAVING JURISDICTION PRIOR TO COMMENCING WORK.

5. CONTRACTOR SHALL TAKE CARE TO AVOID DAMAGE TO EXISTING PAVEMENT, TREES, VEGETATION, STRUCTURES, AND UTILITIES THAT ARE NOT INDICATED TO BE DEMOLISHED OR REMOVED. ANY DAMAGE TO EXISTING PAVEMENT, TREES, VEGETATION, STRUCTURES, AND UTILITIES NOT INDICATED TO BE DEMOLISHED OR REMOVED SHALL BE REPAIRED AT THE CONTRACTOR'S EXPENSE.

6. UTILITIES HAVE BEEN PLOTTED FROM AVAILABLE SURVEY INFORMATION. IT IS THE CONTRACTOR'S RESPONSIBILITY TO VERIFY THEIR EXACT LOCATION AND TO AVOID DAMAGE TO THEM. THE CONTRACTOR SHALL CONTACT VIRGINIA 811 AT PHONE NUMBER 811 OR 1-800-552-7001 TO REQUEST UNDERGROUND UTILITY LOCATION MARK-OUT AT LEAST THREE (3) WORKING DAYS BUT NO MORE THAN TEN (10) WORKING DAYS PRIOR TO BEGINNING EXCAVATION, INCLUDING SOIL DRILLING. THE CONTRACTOR SHALL ALSO CONTACT AND REQUEST UTILITY LOCATION MARK-OUT FROM BURIED UTILITY OWNERS WITH UTILITIES ON THE PROJECT SITE THAT ARE NOT PARTICIPANTS OF VIRGINIA 811.

7. WHERE PROPOSED WORK IS IN THE VICINITY OF UTILITY POLES, SUCH THAT SUPPORT OF THE POLE(S) WILL BE REQUIRED, THE CONTRACTOR SHALL BE RESPONSIBLE FOR NOTIFYING THE UTILITY OF THE WORK. IT WILL BE THE RESPONSIBILITY OF THE CONTRACTOR TO COORDINATE WITH THE UTILITY FOR SUPPORT OF THE POLE.

8. WHERE OVERHEAD POWER LINES ARE PRESENT, CONTRACTOR MUST CONTACT THE UTILITY PRIOR TO CONSTRUCTION ACTIVITIES TO DETERMINE THE MINIMUM REQUIRED EQUIPMENT CLEARANCE (MEC) DISTANCE BASED UPON LINE STRENGTH.

9. THE CONTRACTOR SHALL REMOVE AND DISPOSE OF ALL DEBRIS GENERATED DURING THE PROJECT OFF SITE AT A PROPERLY PERMITTED DISPOSAL FACILITY.

10. GROUNDWATER FROM ALL DE-WATERING OPERATIONS SHALL BE DISCHARGED TO AN ENVIRONMENTALLY ACCEPTABLE LOCATION IN ACCORDANCE WITH THE CONTRACT DOCUMENTS, OR AS DIRECTED BY THE ENGINEER.

ABBREVIATIONS

GENERAL

AC	ASBESTOS CEMENT
ADH	ADHESIVE
ADJ	ADJUSTABLE
AFF	ABOVE FINISHED FLOOR
AL, ALUM	ALUMINUM
ALLOW	ALLOWANCE/ALLOWABLE
ALT	ALTERNATE
APPROX	APPROXIMATE
ARCH	ARCHITECTURAL
ASPH	ASPHALT
B	BORING
BFE	BOTTOM OF FITTING ELEV
B	BASELINE
BL	BUILDING LINE
BLDG	BUILDING
BLK	BLOCK
BM	BENCH MARK
BOC	BACK OF CURB
BOM	BOTTOM OF MASONRY
BOT	BOTTOM
BRG	BEARING
CB	CATCH BASIN
CE	CONSTRUCTION EASEMENT
CF	CUBIC FEET
CFM	CUBIC FEET PER MINUTE
CL	CENTERLINE
CLR	CLEAR
CO	CLEANOUT
COL	COLUMN
CONC	CONCRETE
CONST	CONSTRUCTION
CONT	CONTINUOUS, CONTINUATION
CONTR	CONTRACTOR
CORP	CORPORATION
CP	CONTROL PANEL
CRS	COURSE
CST	CHEMICAL STORAGE TANK
CT	CERAMIC TILE
CTJ	CONTROL JOINT
CU	COPPER
CY	CUBIC YARD
DET	DETAIL
DIA OR Ø	DIAMETER
DIAG	DIAGONAL
DIM	DIMENSION
DISC	DISCONNECT
DISCH	DISCHARGE
DIST	DISTRIBUTION
DL	DEAD LOAD
DN	DOWN
DOZ	DOZEN
DP	DISTRIBUTION PANEL
D/S	DOWNSTREAM
DT	DAY TANK
DWG(S)	DRAWING(S)
DWL	DOWEL
EA	EACH
ECC	ECCENTRIC
ED	EQUIPMENT DRAIN
EE	EACH END
EF	EACH FACE OR EXHAUST FAN
EFF	EFFLUENT
EL	ELEVATION
ELEC	ELECTRICAL
EMH	ELECTRICAL MANHOLE
ENGR	ENGINEER
ENT	ENTRANCE
EOG	EDGE OF GRAVEL
EOP	EDGE OF PAVEMENT
EPX	EPOXY
EQ	EQUAL
EQPT	EQUIPMENT
ET	EXPANSION TANK
EUH	ELECTRIC UNIT HEATER
EW	EACH WAY
EXIST/EX	EXISTING
EXH	EXHAUST
EXP	EXPANSION
EXT	EXTERIOR
FF	FINISH FLOOR
FH	FIRE HYDRANT
FIG	FIGURE
FIN	FINISH
FIX	FIXTURE
FL	FLOOR
FLG	FLANGE
FT	FEET
FTG	FOOTING
GA	GAUGE
GAL	GALLON
GC	GENERAL CONTRACTOR
GEN	GENERATOR
GPM	GALLONS PER MINUTE
GR	GRADE
GW	GUY WIRE
HC	HEATING COIL
HDW	HARDWARE
HORIZ	HORIZONTAL
HP	HORSEPOWER OR HEAT PUMP
HPT	HIGH POINT
HVAC	HEATING, VENTILATION AND AIR CONDITIONING
HWY	HIGHWAY
HYD	HYDRAULIC
I	IRON
ID	INSIDE DIAMETER
IF	INSIDE FACE
IN	INCH
INCL	INCLUDED
INT	INTERIOR
INV	INVERT
J	JOIST
JB	JUNCTION BOX
JCT	JUNCTION
JT	JOINT
L	LENGTH/ANGLE
LB	POUND OR LINE BACK
LF	LINEAR FEET
LG	LONG
LPT	LOW POINT
MAINT	MAINTENANCE
MANUF	MANUFACTURER
MATL	MATERIAL
MAX	MAXIMUM
MECH	MECHANICAL
MET	METAL
MFR	MANUFACTURER
MG	MILLION GALLONS
MGD	MILLION GALLONS PER DAY
MH	MANHOLE
MIN	MINIMUM
MISC	MISCELLANEOUS
MO	MASONRY OPENING
MOD	MODIFY OR MODIFIED
MTD	MOUNTED
MTG	MOUNTING
MULT	MULTIPLE
N	NORTH
NA	NOT APPLICABLE
NAD '83	NORTH AMERICAN DATUM OF 1983
NAVD '88	NORTH AMERICAN VERTICAL DATUM OF 1988
NC	NORMALLY CLOSED
NF	NEAR FACE
NGVD '29	NATIONAL GEODETIC VERTICAL DATUM OF 1929
NIC	NOT IN CONTRACT
No.	NUMBER
NO	NORMALLY OPEN
NTS	NOT TO SCALE
OC	ON CENTER
OD	OUTSIDE DIAMETER OR OVERHEAD DOOR
OF	OUTSIDE FACE
OHE	OVERHEAD ELECTRIC
OPNG	OPENING
OPP	OPPOSITE
ORIG	ORIGINAL
PAR	PARALLEL
PC	POINT OF CURVE OR PIECE OR PERSONAL COMPUTER
PCC	POINT OF COMPOUND CURVE
PCF	POUNDS PER CUBIC FOOT
PERP	PERPENDICULAR
PI	POINT OF INTERSECTION
PL	PROPERTY LINE OR PLATE
PNL	PANEL
PP	POWER PANEL OR POWER POLE
PREFAB	PREFABRICATED
PROP	PROPOSED
PSF	POUNDS PER SQUARE FOOT
PSI	POUNDS PER SQUARE INCH
PT	POINT OF TANGENT/POINT
PVMT	PAVEMENT
QTY	QUANTITY
RAD	RADIUS
RECIR	RECIRCULATION
RECT	RECTANGULAR
REF	REFERENCE
REINF	REINFORCING
REM	REMOVE
REQD	REQUIRED
REST	RESTRAINED
REV	REVISE
RJ	RESTRAINED JOINT
RM	ROOM
RND	ROUND
RO	ROUGH OPENING
RT	RIGHT
R/W OR ROW	RIGHT OF WAY
S	SOUTH OR SLOPE
SB	SOIL BORING
SBL	SURVEY BASELINE
SCH	SCHEDULE
SECT	SECTION
SERV	SERVICE
SF	SQUARE FEET
SHT	SHEET
SI	SQUARE INCH
SIM	SIMILAR
SMH	STORM MANHOLE
SP	SUMP PUMP
SPEC	SPECIFICATION
SQ	SQUARE
SSP	SUBMERSIBLE SUMP PUMP
SST	STAINLESS STEEL
STA	STATION OR STACK
STD	STANDARD
STG	STORAGE OR STOP GATE (LOG)
STL	STEEL
STRU	STRUCTURAL
SUB	SUBSTITUTE
SUCT	SUCTION
SUR	SURFACE
SUSP	SUSPENDED
TBA	TO BE ABANDONED
TECH	TECHNICAL
TEMP	TEMPERATURE
THK	THICK
THRU	THROUGH
TOC	TOP OF CONCRETE
TOM	TOP OF MASONRY/MANHOLE
TOS	TOP OF SLAB/ TOP OF STEEL
TOL	TOLERANCE
TYP	TYPICAL
UG	UNDERGROUND
UGE	UNDERGROUND ELECTRIC
UGG	UNDERGROUND GAS
UNFIN	UNFINISHED
UNO	UNLESS NOTED OTHERWISE
UPS	UNINTERRUPTIBLE POWER SUPPLY
UTIL	UTILITY
VEL	VELOCITY
VERT	VERTICAL
VOL	VOLUME
W/	WITH
W/O	WITHOUT
WP	WATERPROOF
WPFG	WATER PROOFING
WT	WEIGHT
WTP	WATER TREATMENT PLANT
WV	WATER VALVE
XFMR	TRANSFORMER
XMH	EXISTING MANHOLE
YD	YARD
YR	YEAR

VALVES, FITTINGS, ETC.

BF	BLIND FLANGE
BV	BALL VALVE
CV	CHECK VALVE
CPLG	COUPLING
FLEX	FLEXIBLE
FLG	FLANGE
FTG	FITTING
GV	GATE VALVE
PV	PLUG VALVE

PROCESS PIPING

RW	RAW WATER
RWB	RAW WATER BACKWASH
RWI	RAW WATER INTAKE
W	WATER LINE

LEGEND

SECTION AND DETAIL KEYING

DRAWINGS ARE CROSS REFERENCED IN THE FOLLOWING METHOD:

(A) A SECTION CUT ON DRAWING A3 IS IDENTIFIED AS FOLLOWS:

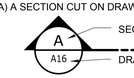

(B) THE SECTION SHOWN ON DRAWING A16 IS IDENTIFIED AS FOLLOWS:

DETAILS ARE CROSS REFERENCED IN A SIMILAR MANNER, EXCEPT DETAILS ARE IDENTIFIED BY A SQUARE WITH A NUMBER IN THE UPPER HALF.

STANDARD DETAILS ARE REFERENCED BY A UNIQUE SEVEN DIGIT NUMBER AND ARE SHOWN ON THE CONTRACT DRAWINGS BY ONE OF TWO METHODS:

1509203 → REFERENCED ITEM

OR:

SEE 1509203 → REFERENCED ITEM

STANDARD DETAILS ARE COMPILED IN APPROXIMATE NUMERICAL ORDER IN THE BACK OF THE CONTRACT DRAWINGS ON THE D* DRAWINGS.

MATERIALS

ASPHALT PAVING	GRADE OR EARTH
CHECKERED PLATE	GRAVEL
CONCRETE	GRATING
CONC FILL OR GROUT	ROCK

SYMBOLS

GATE VALVE	WALL PENETRATION
BUTTERFLY VALVE	MECHANICAL COUPLING
PLUG VALVE	WELDED JOINT
SWING CHECK VALVE	FLANGED JOINT
GLOBE VALVE	MECHANICAL, PUSH ON OR RESTRAINED JOINT
PINCH VALVE	SLUICE GATE
DIAPHRAGM VALVE	SLIDE GATE/STOP GATE
BALL VALVE	FLUSHING CONNECTION
BALL CHECK VALVE	HOSE BIBB
HARNESSED FLANGED ADAPTER	QUICK DISCONNECT FITTING
HARNESSED SLEEVE TYPE COUPLING	YARD HYDRANT
SLEEVE TYPE COUPLING	FIRE HYDRANT
HARNESSED FLEXIBLE COUPLING	SOIL BORING
CE CONSTRUCTION ENTRANCE	TS TEMPORARY SEEDING
SF SILT FENCE	PS PERMANENT SEEDING

LINETYPES

PROPOSED ITEMS	CENTER LINE
EXISTING ITEMS	MATCH LINE
HIDDEN ITEMS	EXISTING PAVEMENT
DEMOLITION ITEMS	

INDEX OF DRAWINGS

DWG No.	TITLE
GENERAL	
-	COVER
G1	GENERAL NOTES, ABBREVIATIONS, LEGEND, AND INDEX OF DRAWINGS
CIVIL	
C1	DEMOLITION AND EROSION AND SEDIMENT CONTROL PLAN
C2	SITE PLAN
C3	PROFILES
C4	VALVE BUILDING PLAN AND ELEVATIONS
C5	NOTES AND DETAILS
C6	EROSION AND SEDIMENT CONTROL NOTES AND DETAILS
C7	CITY STANDARD DETAILS
MECHANICAL	
M1	GROUND STORAGE TANK BOTTOM AND TOP PLAN
M2	GROUND STORAGE TANK SECTIONS I
M3	GROUND STORAGE TANK SECTIONS II
M4	VALVE BUILDING PLAN AND SECTIONS
M5	TYPICAL DETAILS I
M6	TYPICAL DETAILS II
ELECTRICAL	
E1	LEGEND
E2	ONE-LINE DIAGRAMS AND NOTES
E3	SITE PLAN
E4	VALVE BUILDING PLAN, ELEVATION, AND DETAILS
E5	DETAILS AND SCHEDULES

REV	ISSUED FOR	DATE	BY
1	CONSTRUCTION SET	1/19	JKP

PROJECT ENGINEER:	J. PETERY
DESIGNED BY:	J. PETERY
DRAWN BY:	J. JORDAN
CHECKED BY:	G. ROGERS

IF THIS BAR DOES NOT MEASURE 1" THEN DRAWING IS NOT TO FULL SCALE (0 1/2" 1")

CONSTRUCTION SET

COMMONWEALTH OF VIRGINIA — JOELLE S. PETERY — Lic. No. 036763 — PROFESSIONAL ENGINEER — 01/11/19

Hazen

HAZEN AND SAWYER
1555 ROSENEATH ROAD
RICHMOND, VIRGINIA 23230
PHONE: 804-266-1400

CITY OF WINCHESTER
DEPARTMENT OF PUBLIC SERVICES
WINCHESTER, VIRGINIA

STROTHERS LANE GROUND STORAGE TANK REPLACEMENT

GENERAL NOTES, ABBREVIATIONS, LEGEND, AND INDEX OF DRAWINGS

DATE:	JANUARY 2019
HAZEN NO.:	31294-011
CONTRACT NO.:	201901
DRAWING NUMBER:	G1

File: O:\31294-RIC\31294-011\CAD_BIM\GENERAL\G01 Saved by ADAMNELL Save date: 1/14/2019 9:59 AM
Pl.OT DATE: 1/16/2019 11:14 AM BY: ADAMNELL

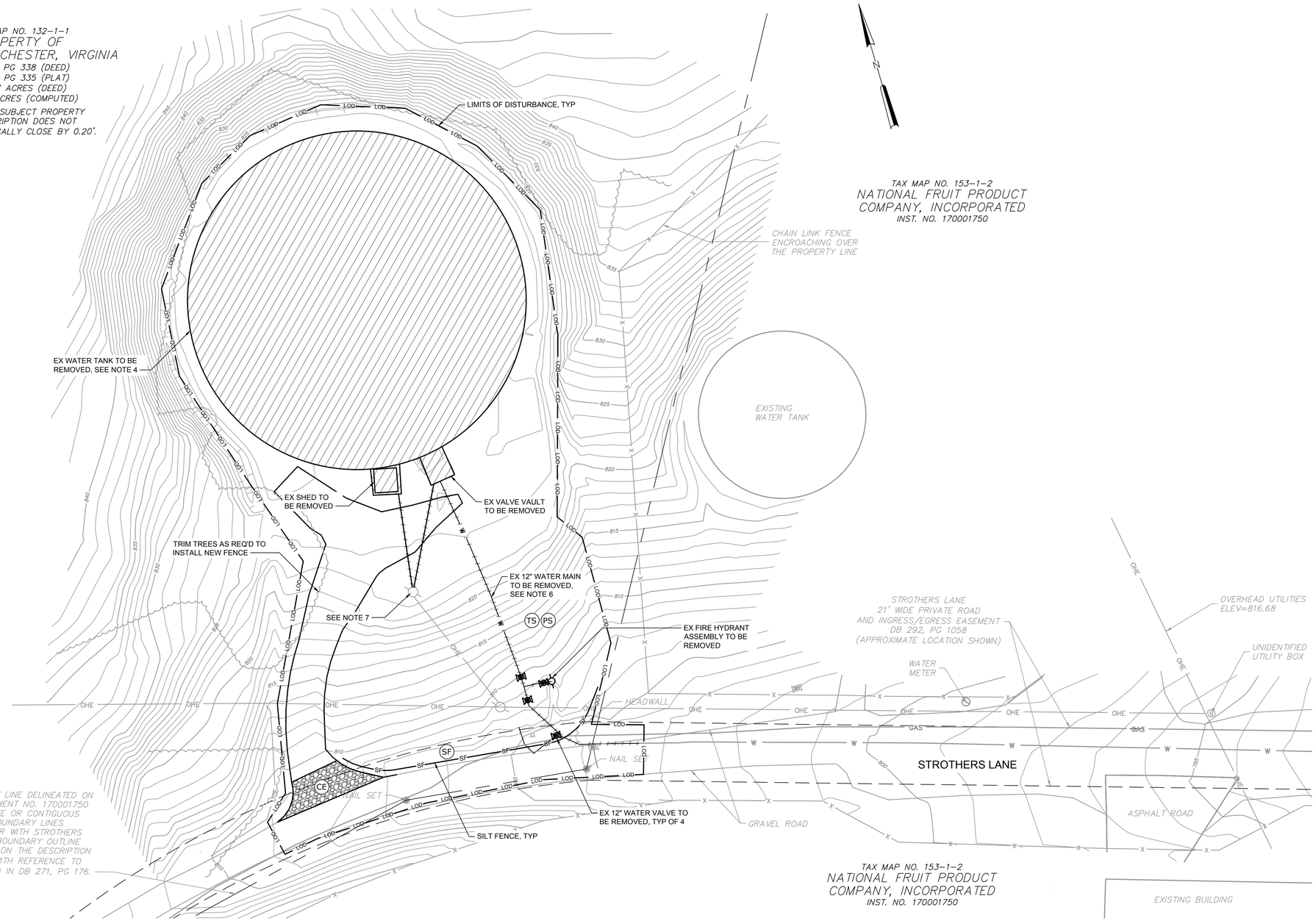

NOTES:

1. EROSION AND SEDIMENT CONTROL MEASURES SHALL BE IN ACCORDANCE WITH THE VIRGINIA EROSION AND SEDIMENT CONTROL HANDBOOK (VESCH) AND THE NOTES, DETAILS AND SPECIFICATIONS INCLUDED IN THIS CONTRACT.
2. SILT FENCE SHOWN OFFSET FROM LIMITS OF WORK FOR CLARITY.
3. SOIL AREAS DESIGNATED FOR PERMANENT SEEDING SHALL BE PREPARED WITH 6" TOPSOIL, SEEDED AND MULCHED.
4. REMOVE EXISTING STEEL TANK AND ALL ASSOCIATED APPURTENANCES. REMOVE CONCRETE RING WALL ONLY TO EXTENT REQUIRED TO INSTALL NEW TANK. REMOVE EXISTING OIL-IMPREGNATED SAND LAYER.
5. UPON COMPLETION OF DEMOLITION, CONTRACTOR SHALL EXCAVATE ALL UNSUITABLE SOIL BELOW NEW TANK FOUNDATION AT THE DIRECTION OF AN INDEPENDENT TESTING CONSULTANT. CONTRACTOR SHALL BACKFILL EXCAVATION WITH VDOT 21B STONE IN LIFTS AND COMPACT TO SATISFACTION OF THE INDEPENDENT TESTING CONSULTANT. PAYMENT FOR THIS WORK WILL BE COVERED UNDER BID ITEMS 2 AND 3.
6. CONTRACTOR SHALL COORDINATE WITH CITY TO ISOLATE EXISTING 12" WATER MAIN PRIOR TO DEMOLITION. EXISTING RECORDS INDICATE AN ISOLATION VALVE LOCATED ON THE EXISTING LINE AT THE INTERSECTION OF STROTHERS LANE AND FAIRMONT AVE. CONTRACTOR SHALL PROVIDE A RESTRAINED CAP ON THE EXISTING PIPE.
7. DEMOLISH EXISTING SERVICE ENTRANCE AND SECURITY CAMERA. SEE CONTROL ONE-LINE DIAGRAM SHEET E2.

REV	ISSUED FOR	DATE	BY
1	CONSTRUCTION SET	1/19	JKP

PROJECT ENGINEER:	J. PETERY
DESIGNED BY:	J. PETERY
DRAWN BY:	J. JORDAN
CHECKED BY:	G. ROGERS

IF THIS BAR DOES NOT MEASURE 1" THEN DRAWING IS NOT TO FULL SCALE 0 1/2" 1"

CONSTRUCTION SET

COMMONWEALTH OF VIRGINIA
JOPLIN PETERY
Lic. No.036763
01/11/19
PROFESSIONAL ENGINEER

Hazen

HAZEN AND SAWYER
1555 ROSENEATH ROAD
RICHMOND, VIRGINIA 23230
PHONE: 804-266-1400

CITY OF WINCHESTER
DEPARTMENT OF PUBLIC SERVICES
WINCHESTER, VIRGINIA

STROTHERS LANE GROUND STORAGE TANK REPLACEMENT

CIVIL

DEMOLITION AND EROSION AND SEDIMENT CONTROL PLAN

DATE:	JANUARY 2019
HAZEN NO.:	31294-011
CONTRACT NO.:	201901
DRAWING NUMBER:	C1

File: O:\31294-RICI\31294-011\CAD_BIM\CIVIL\C01 Saved by ADARNELL Save date: 1/14/2019 10:05 AM
PLOT DATE: 1/16/2019 11:15 AM BY: ADARNELL

NOTES:

1. DROP INLET AND MANHOLE STRUCTURES SHALL CONFORM TO VDOT STANDARDS.

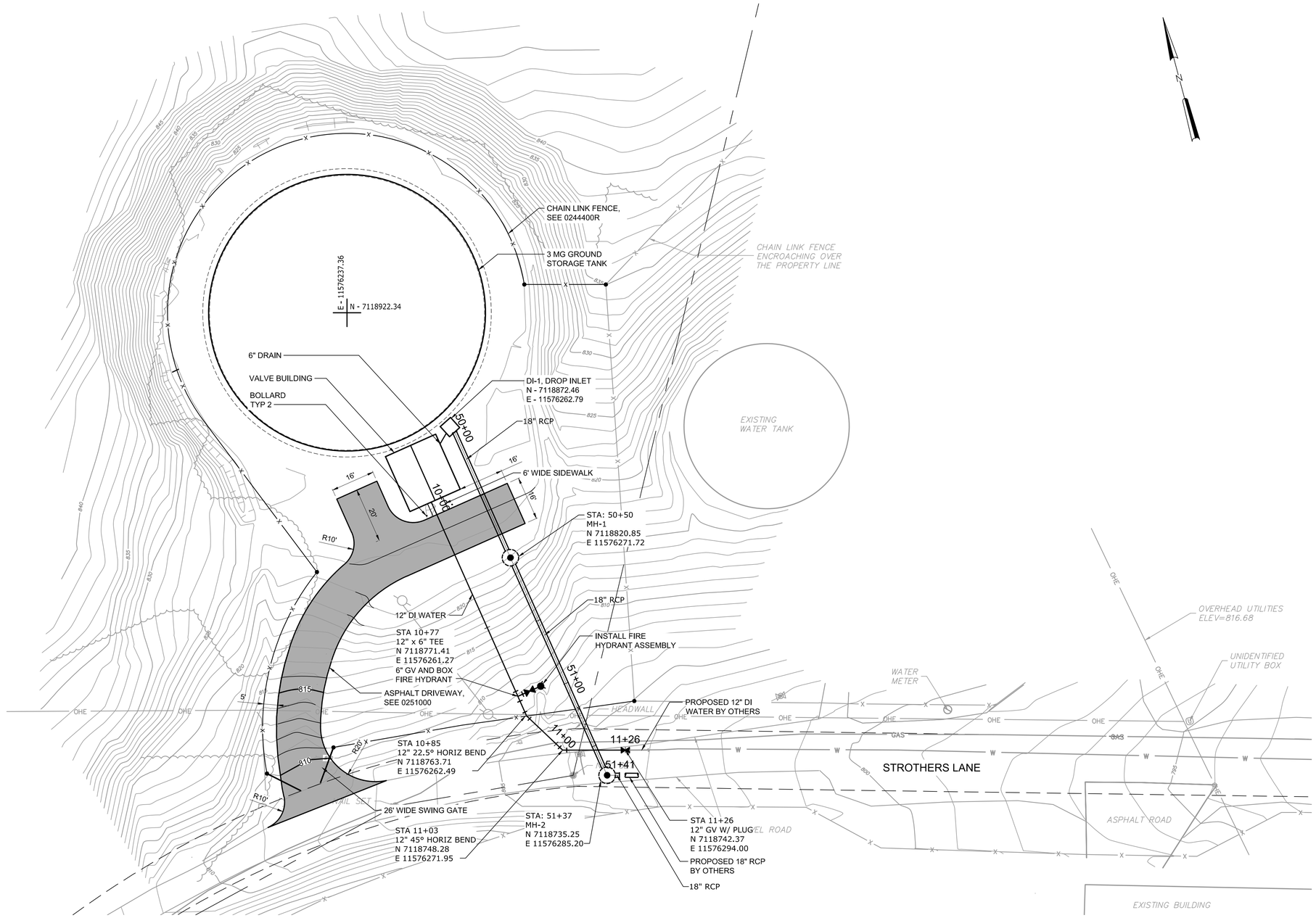

SCALE: 1" = 20'

20 10 0 20'

REV	ISSUED FOR	DATE	BY
1	CONSTRUCTION SET	1/19	JKP

PROJECT ENGINEER:	J. PETERY
DESIGNED BY:	J. PETERY
DRAWN BY:	J. JORDAN
CHECKED BY:	G. ROGERS

IF THIS BAR DOES NOT MEASURE 1" THEN DRAWING IS NOT TO FULL SCALE 0 1/2" 1"

CONSTRUCTION SET

COMMONWEALTH OF VIRGINIA
JOEL M. PETERY
Lic. No. 036763
01/11/19
PROFESSIONAL ENGINEER

Hazen

HAZEN AND SAWYER
1555 ROSENEATH ROAD
RICHMOND, VIRGINIA 23230
PHONE: 804-266-1400

CITY OF WINCHESTER
DEPARTMENT OF PUBLIC SERVICES
WINCHESTER, VIRGINIA

STROTHERS LANE GROUND STORAGE TANK REPLACEMENT

CIVIL

SITE PLAN

DATE:	JANUARY 2019
HAZEN NO.:	31294-011
CONTRACT NO.:	201901
DRAWING NUMBER:	C2

File: O:\31294-RICI\31294-011\CAD_BIM\CIVIL\C02 Saved by ADARNELL Save date: 1/14/2019 10:06 AM
PLOT DATE: 1/16/2019 11:15 AM BY: ADARNELL

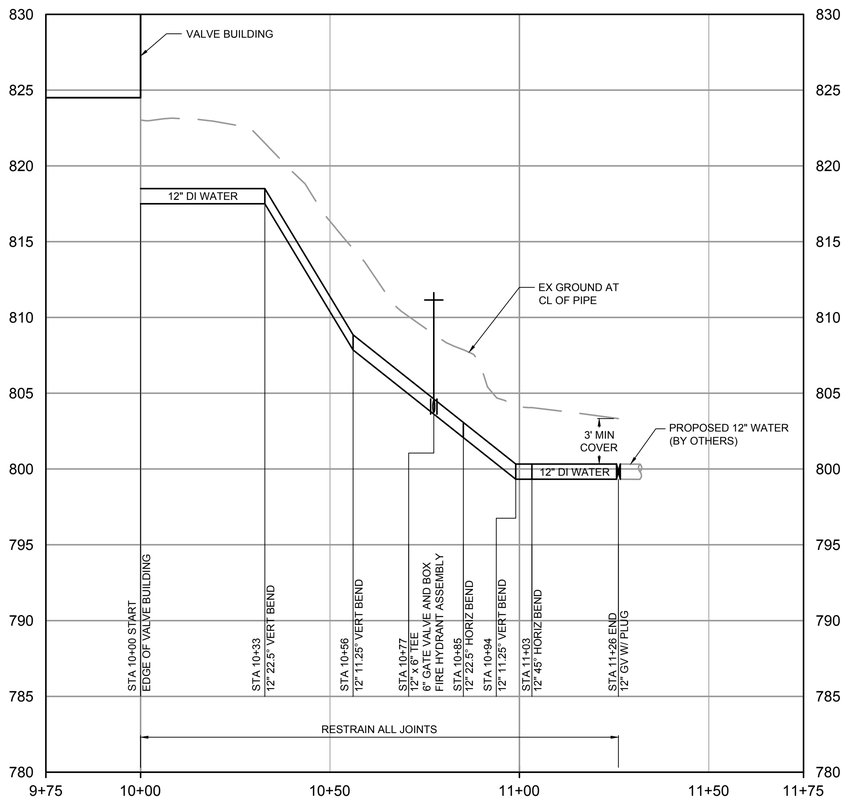

12" WATER LINE PROFILE

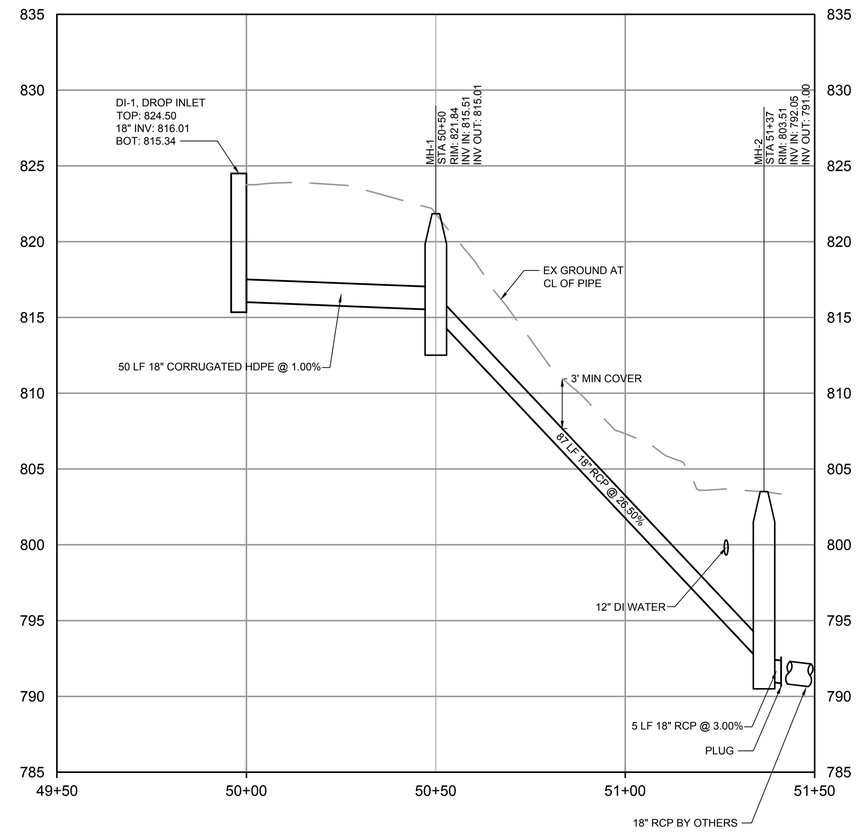

18" DRAIN PROFILE

HORIZONTAL SCALE: 1" = 20'

20 10 0 20'

5 0 5

VERTICAL SCALE: 1"=5'

REV	ISSUED FOR	DATE	BY
1	CONSTRUCTION SET	1/19	JKP

PROJECT ENGINEER: J. PETERY

DESIGNED BY: J. PETERY

DRAWN BY: J. JORDAN

CHECKED BY: G. ROGERS

IF THIS BAR DOES NOT MEASURE 1" THEN DRAWING IS NOT TO FULL SCALE 0 1/2" 1"

CONSTRUCTION SET

COMMONWEALTH OF VIRGINIA
JOEL M. PETERY
Lic. No. 036763
01/11/19
PROFESSIONAL ENGINEER

Hazen

HAZEN AND SAWYER
1555 ROSENEATH ROAD
RICHMOND, VIRGINIA 23230
PHONE: 804-266-1400

CITY OF WINCHESTER
DEPARTMENT OF PUBLIC SERVICES
WINCHESTER, VIRGINIA

STROTHERS LANE GROUND
STORAGE TANK REPLACEMENT

CIVIL

PROFILES

DATE: JANUARY 2019

HAZEN NO.: 31294-011

CONTRACT NO.: 201901

DRAWING NUMBER: C3

File: O:\31294-R\C\31294-011\CAD_BIM\CIVIL\C03 Saved by ADARNELL Save date: 1/14/2019 10:10 AM
PLOT DATE: 1/16/2019 11:16 AM BY: ADARNELL

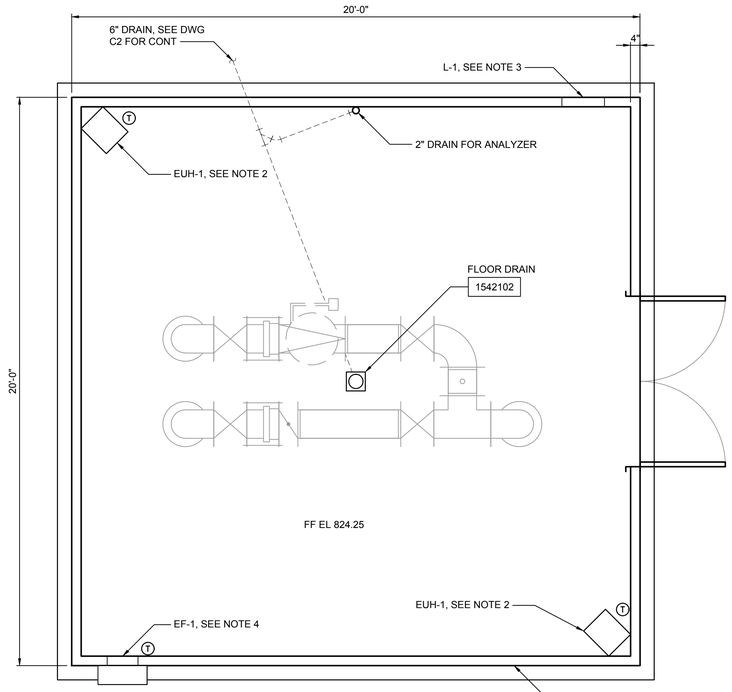

BOTTOM PLAN
3/8" = 1'-0"

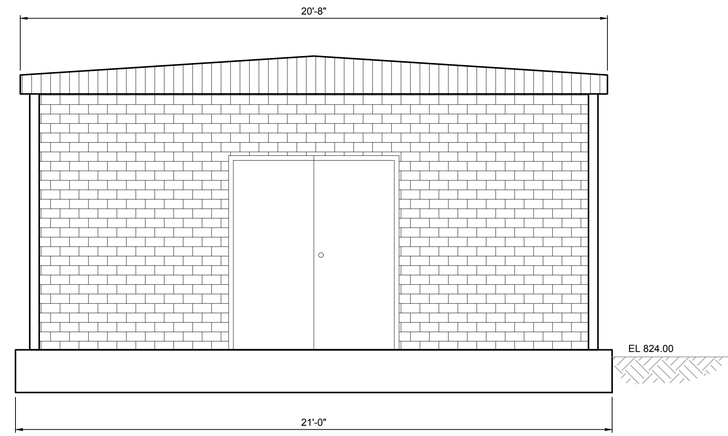

SOUTH
3/8" = 1'-0"

NOTES:

1. 20'-0" x 20'-0" x 12'-0" PRECAST CONCRETE BUILDING. SEE SECTION 03452.
2. PROVIDE 5kW ELECTRIC UNIT HEATER WITH INTEGRAL THERMOSTAT.
3. PROVIDE 18" SQ FIXED LOUVER WITH GRAVITY DAMPER AND BIRD SCREEN.
4. PROVIDE 350 CFM SIDEWALL EXHAUST FAN WITH GRAVITY DAMPER BIRD SCREEN AND THERMOSTAT.
5. PROVIDE FRP COATED INSULATED PANELS ON WALLS AND CEILING. MINIMUM INSULATION THICKNESS 2". PANELS SHALL BE PERMATHEM OR EQUAL.

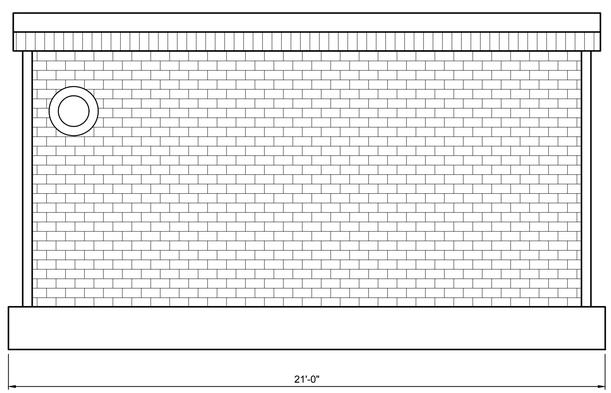

WEST
3/8" = 1'-0"

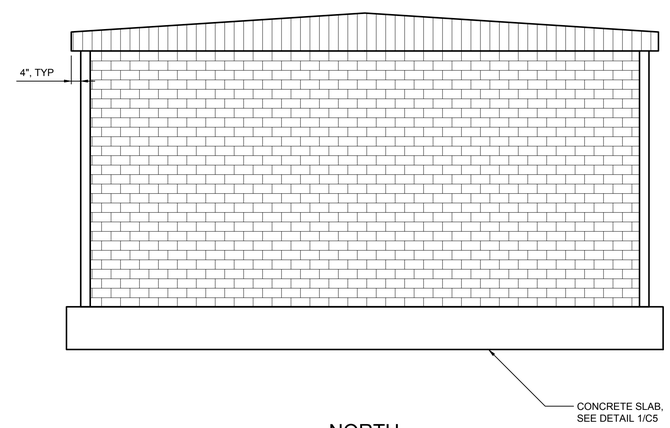

NORTH
3/8" = 1'-0"

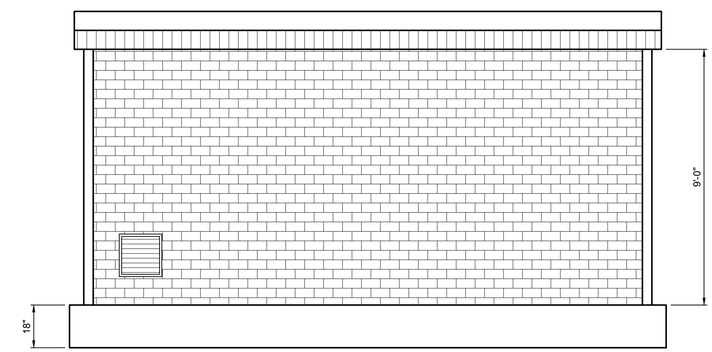

EAST
3/8" = 1'-0"

REV	ISSUED FOR	DATE	BY
1	CONSTRUCTION SET	1/19	JKP

PROJECT ENGINEER:	J. PETERY
DESIGNED BY:	J. PETERY
DRAWN BY:	J. JORDAN
CHECKED BY:	G. ROGERS
IF THIS BAR DOES NOT MEASURE 1" THEN DRAWING IS NOT TO FULL SCALE	0 1/2" 1"

CONSTRUCTION SET

COMMONWEALTH OF VIRGINIA
JOEL M. PETERY
Lic. No. 036763
01/11/19
PROFESSIONAL ENGINEER

Hazen

HAZEN AND SAWYER
1555 ROSENEATH ROAD
RICHMOND, VIRGINIA 23230
PHONE: 804-266-1400

CITY OF WINCHESTER
DEPARTMENT OF PUBLIC SERVICES
WINCHESTER, VIRGINIA

STROTHERS LANE GROUND
STORAGE TANK REPLACEMENT

VALVE BUILDING

CIVIL

PLAN AND ELEVATIONS

DATE:	JANUARY 2019
HAZEN NO.:	31294-011
CONTRACT NO.:	201901
DRAWING NUMBER:	C4

File: O:\31294-RIC\31294-011\CAD_BIM\CIVIL\C04 Saved by ADARNELL Save date: 1/14/2019 10:09 AM
PLOT DATE: 1/16/2019 11:16 AM BY: ADARNELL

GENERAL STRUCTURAL NOTES

G-1 THESE NOTES ARE GENERAL AND SUPPLEMENT THE SPECIFICATIONS. THESE NOTES APPLY TO THE ENTIRE PROJECT UNLESS MODIFIED OR NOTED OTHERWISE IN THE CONTRACT DOCUMENTS.

G-2 DESIGN IS IN ACCORDANCE WITH AND CONSTRUCTION SHALL COMPLY WITH THE PROVISIONS OF THE VIRGINIA CONSTRUCTION CODE. THE DESIGN LOADS AND OTHER DESIGN VALUES GIVEN IN NOTES G-4 THROUGH G-7 WERE USED FOR DESIGN OF STRUCTURES UNLESS NOTED OTHERWISE ON THE DRAWINGS.

G-3 ALL DIMENSIONS INDICATED (*) SHALL BE VERIFIED EITHER BY FIELD MEASUREMENTS FOR EXISTING STRUCTURES OR BY SHOP DRAWINGS FOR EQUIPMENT FURNISHED. STRUCTURAL DIMENSIONS NOT SHOWN BUT CONTROLLED BY OR RELATED TO EQUIPMENT SHALL BE VERIFIED BY THE CONTRACTOR WITH THE MANUFACTURER PRIOR TO CONSTRUCTION.

G-4 THE CONTRACTOR IS RESPONSIBLE FOR VERIFYING ALL EXISTING INFORMATION IN THE FIELD AS REQUIRED FOR NEW WORK.

G-5 IF A CONFLICT IS FOUND BETWEEN DIFFERENT PORTIONS OF THE CONTRACT DOCUMENTS, THE CONTRACTOR SHALL NOTIFY THE ENGINEER IMMEDIATELY. CONTINUED CONSTRUCTION OF THE AREA IN CONFLICT SHALL BE AT THE CONTRACTOR'S OWN RISK UNTIL THE CONFLICT IS RESOLVED.

G-6 EQUIPMENT ANCHOR BOLT SIZES, TYPES, EMBEDMENT AND PATTERNS SHALL BE VERIFIED WITH THE MANUFACTURER. ALL BOLT PATTERNS SHALL BE TEMPLATED TO INSURE ACCURACY OF PLACEMENT.

G-7 STRUCTURAL DRAWINGS SHALL BE USED IN COORDINATION WITH THE DRAWINGS OF ALL OTHER DISCIPLINES AND MANUFACTURER'S SHOP DRAWINGS.

G-8 STRUCTURES HAVE BEEN DESIGNED FOR OPERATIONAL LOADS ON THE COMPLETED STRUCTURE. DURING CONSTRUCTION, THE STRUCTURES SHALL BE PROTECTED BY BRACING AND TEMPORARY SUPPORTS WHEREVER EXCESSIVE CONSTRUCTION LOADS MAY OCCUR. OVERSTRESSING OF ANY STRUCTURAL ELEMENT IS PROHIBITED.

G-9 IF CONTRACTOR DESIRES TO TEMPORARILY PLACE OR MOVE LOADS ON OR ADJACENT TO EXISTING STRUCTURES OR UTILITIES DURING CONSTRUCTION PROCESS, CONTRACTOR IS EXCLUSIVELY RESPONSIBLE FOR MAINTAINING STRUCTURAL INTEGRITY AND AVOIDING OVERSTRESSING AND DAMAGING EXISTING STRUCTURES AND UTILITIES. CONTRACTOR SHALL SUBMIT STRUCTURAL CALCULATIONS AND DRAWINGS VERIFYING PROPOSED CONSTRUCTION INCLUDING APPLICATION OF TEMPORARY CONSTRUCTION LOADS WILL NOT OVERSTRESS OR DAMAGE EXISTING STRUCTURES AND UTILITIES.. DRAWINGS AND CALCULATIONS SHALL BE SEALED BY A PROFESSIONAL ENGINEER CURRENTLY REGISTERED IN THE COMMONWEALTH OF VIRGINIA

G-10 NO BACKFILL SHALL BE PLACED AGAINST ANY SUBSTRUCTURE WALLS UNLESS ALL ADJACENT SUPPORTING ELEMENTS HAVE ACHIEVED DESIGN STRENGTH, OR WALLS HAVE BEEN PROPERLY BRACED, AND IN ANY CASE NOT SOONER THAN 28 DAYS AFTER THE PLACING OF CONCRETE UNLESS APPROVED BY THE ENGINEER. SUPPORTING ELEMENTS SHALL INCLUDE ADJACENT WALLS, SLABS, BEAMS AND COLUMNS.

CONCRETE (CAST-IN-PLACE)

C-1 DESIGN OF CONCRETE ELEMENTS INCLUDING WALLS, FORMED SLABS, BEAMS, AND COLUMNS IS IN ACCORDANCE WITH ACI 318 (CODE REQUIREMENTS FOR STRUCTURAL CONCRETE) AND 350 (CODE REQUIREMENTS FOR ENVIRONMENTAL ENGINEERING CONCRETE STRUCTURES).

C-2 FOR CONCRETE MIX DESIGN SEE SPECIFICATION SECTION 03300.

C-3 CONCRETE STRENGTH CLASSES SEE SPECIFICATION SECTION 03300.

C-4 ALL BAR REINFORCING SHALL CONFORM TO ASTM A615, GRADE 60. WHERE REINFORCEMENT IS TO BE WELDED IN ACCORDANCE WITH AWS D1.4, ASTM A706 GRADE 60 SHALL BE USED. WELDED WIRE FABRIC SHALL CONFORM TO ASTM A185.

C-5 CONCRETE COVER FOR REINFORCING (UNLESS NOTED OTHERWISE ON THE DRAWINGS):

A)	CONCRETE DEPOSITED DIRECTLY AGAINST SOIL:	3"
B)	CONCRETE EXPOSED TO WEATHER (#5 OR SMALLER):	1 1/2"
	CONCRETE EXPOSED TO WEATHER (#6 OR LARGER):	2"
C)	SLABS:	1 1/2"
	AT SURFACES CONTACTING FLUID:	2"
D)	BEAMS AND COLUMNS (TO MAIN REINFORCEMENT):	2"
	BEAMS AND COLUMNS (TO COLUMN TIES OR STIRRUPS):	1 1/2"
E)	WALLS 12" OR MORE:	2"
	WALLS LESS THAN 12" (#5 OR SMALLER):	1 1/2"
	WALLS LESS THAN 12" (#6 OR LARGER):	2"
F)	FOR SURFACES EXPOSED TO FLUID IN BEAMS, COLUMNS AND WALLS:	ADD 1/2" TO ABOVE VALUES

C-6 SPLICES SHALL BE CLASS "B" CONFORMING TO THE PROVISIONS OF ACI 318 UNLESS NOTED OTHERWISE. SPLICE LENGTH FOR TWO DIFFERENT SIZED BARS TO BE LAP SPLICED TOGETHER SHALL BE THE LENGTH OF THE LARGER BAR UNLESS NOTED OTHERWISE.

C-7 CONSTRUCTION JOINTS SHALL BE LOCATED AS SHOWN ON THE DRAWINGS. CONSTRUCTION JOINTS NOT SHOWN SHALL BE SUBMITTED BY THE CONTRACTOR FOR THE APPROVAL OF THE ENGINEER PRIOR TO SUBMITTING REBAR SHOP DRAWINGS. VERTICAL CONSTRUCTION JOINTS IN WALLS AND HORIZONTAL JOINTS IN SLABS SHALL BE PROVIDED AT A SPACING NOT GREATER THAN 45 FEET ON CENTER. FOR EXPOSED WALLS WITH FLUID OR EARTH ON THE OPPOSITE SIDE, THE SPACING BETWEEN VERTICAL AND HORIZONTAL JOINTS SHALL BE A MAXIMUM OF 25 FEET.

C-8 WHERE HORIZONTAL CONSTRUCTION JOINTS, LOCATED ABOVE THE FOUNDATION SLAB, EXTEND BEYOND WHERE NEEDED, THEY SHALL BE TERMINATED AT A VERTICAL CONSTRUCTION JOINT APPROVED BY THE ENGINEER.

C-9 ALL JOINTS WHICH ARE IN MEMBERS IN CONTACT WITH LIQUID OR BELOW GRADE SHALL HAVE A WATERSTOP. CONSTRUCTION JOINTS SHALL HAVE A 6" PVC RIBBED WATERSTOP. EXPANSION JOINTS SHALL HAVE A 9" PVC CENTER BULB RIBBED WATERSTOP. IN VERTICAL JOINTS, WATERSTOPS SHALL TERMINATE NO LESS THAN 18" ABOVE THE MAXIMUM WATER SURFACE OR 18" ABOVE GRADE, WHICHEVER IS HIGHER.

C-10 SLABS WITH SLOPING SURFACES SHALL HAVE THE INDICATED SLAB THICKNESS MAINTAINED AS THE MINIMUM. SLAB BOTTOMS CAN EITHER SLOPE WITH THE TOP SURFACE OR BE LEVEL. REINFORCEMENT IN SLABS WITH SLOPING SURFACES SHALL BE PLACED AT THE REQUIRED CLEARANCE FROM THE SLAB SURFACE.

C-11 ALL EXPOSED CORNERS SHALL HAVE A 3/4" CHAMFER OR A 1/2" RADIUS TOOLED CORNER.

C-12 EQUIPMENT SUPPORTS, ANCHORAGES, OPENINGS, RECESSES AND REVEALS NOT SHOWN ON THE STRUCTURAL DRAWINGS BUT REQUIRED BY OTHER CONTRACT DOCUMENTS, SHALL BE PROVIDED FOR PRIOR TO PLACING CONCRETE.

C-13 REINFORCING BARS AND ACCESSORIES SHALL NOT BE IN CONTACT WITH ANY METAL PIPE, PIPE FLANGE, METAL CONDUIT, OR OTHER METAL PARTS EMBEDDED IN CONCRETE. A MINIMUM CLEARANCE OF 2" SHALL BE PROVIDED.

C-14 DOWELS, ANCHOR BOLTS, PIPES, WATERSTOPS AND OTHER EMBEDDED ITEMS SHALL BE HELD SECURELY IN POSITION WHILE CONCRETE IS BEING PLACED.

C-15 CONDUITS AND OTHER SIMILAR ITEMS EMBEDDED IN OR PENETRATING THROUGH CONCRETE SHALL BE SPACED ON CENTER NOT LESS THAN 3 TIMES THEIR OUTSIDE DIMENSION, BUT NOT LESS THAN 2 1/2" CLEAR. WHEN SUCH ITEMS ARE EMBEDDED IN WALLS OR SLABS, THEY SHALL NOT OCCUPY MORE THAN 1/3 OF THE MEMBER THICKNESS.

C-16 AT ALL TYPICAL CURBS, EQUIPMENT PADS, AND PIPE SUPPORT PIERS, REINFORCING DOWELS SHOWN MAY BE REPLACED WITH MATCHING DOWELS SET IN EPOXY IN DRILLED HOLES AS SPECIFIED. DOWELS LOCATED CLOSER THAN 3" FROM ANY EDGE OF CONCRETE SHALL NOT BE REPLACED WITH DRILLED DOWELS.

C-17 DRILLED ADHESIVE DOWELS (WHERE DOWELS ARE SHOWN TO BE PLACED INTO HARDENED CONCRETE):

A) THE HOLE DIAMETER SHALL BE NO LARGER THAN 1/8" GREATER THAN THE DIAMETER OF THE REINFORCING BAR AT THE DEFORMATIONS.
B) THE DEPTH OF EMBEDMENT SHALL BE 12 BAR DIAMETERS, UNLESS NOTED OTHERWISE.
C) ADJUST THE DOWEL LOCATIONS AS NEEDED TO AVOID DRILLING THROUGH ANY REINFORCING BARS. IF THE LOCATION NEEDS TO BE MODIFIED, CONTACT THE ENGINEER. CONTRACTOR SHALL USE NON-DESTRUCTIVE MEANS TO FIELD LOCATE REINFORCEMENT PRIOR TO DRILLING HOLES FOR DOWELS.

C-18 CLEAR DISTANCE FROM ANCHOR BOLTS TO ANY CONCRETE EDGE SHALL BE 4" MINIMUM UNLESS NOTED OTHERWISE.

C-19 CONCRETE COMPRESSIVE STRENGTH TESTS SHALL BE AVAILABLE ON THE JOB SITE FOR REVIEW BY THE ENGINEER.

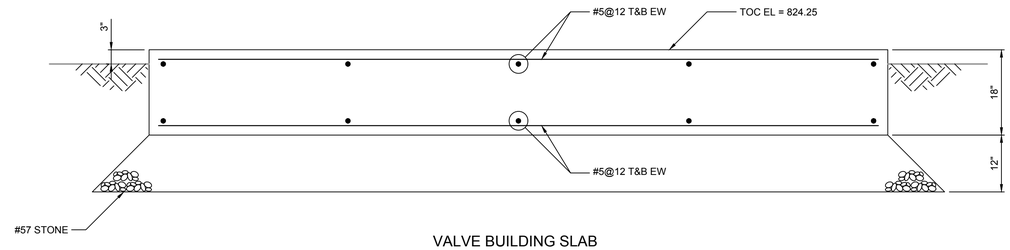

VALVE BUILDING SLAB

DETAIL 1 / C2
3/4" = 1'-0"

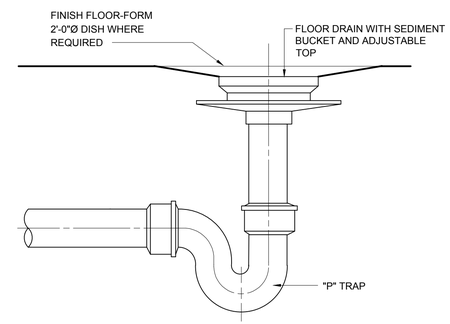

FLOOR DRAIN

1542102

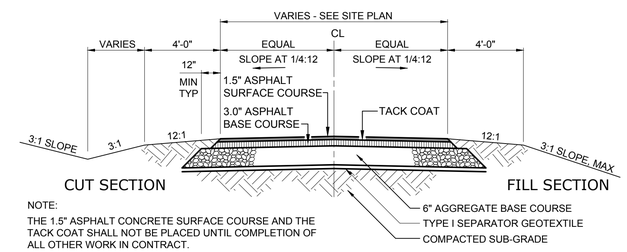

NOTE:
THE 1.5" ASPHALT CONCRETE SURFACE COURSE AND THE TACK COAT SHALL NOT BE PLACED UNTIL COMPLETION OF ALL OTHER WORK IN CONTRACT.

TYPICAL ROADWAY SECTION

0251000

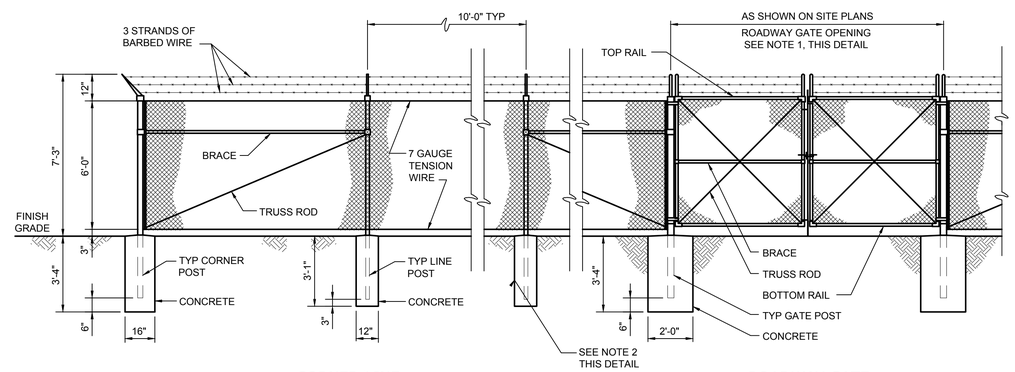

CORNER/LINE

ROADWAY GATE

CHAIN LINK FENCE

0244400R

NOTES:

1. PROVIDE LATCHING DEVICES TO HOLD GATES IN OPEN
2. POSITION. IF ROCK IS ENCOUNTERED WHEN SETTING POSTS, DRILL HOLES 4 INCHES LARGER IN DIAMETER THAN POSTS AND BACKFILL TO GRADE WITH CLASS "B" CONCRETE.

REV	ISSUED FOR	DATE	BY
1	CONSTRUCTION SET	1/19	JKP

PROJECT ENGINEER:	J. PETERY
DESIGNED BY:	J. PETERY
DRAWN BY:	J. JORDAN
CHECKED BY:	G. ROGERS
IF THIS BAR DOES NOT MEASURE 1" THEN DRAWING IS NOT TO FULL SCALE	0 1/2" 1"

CONSTRUCTION SET

COMMONWEALTH OF VIRGINIA
JOEL AS PETERY
Lic. No. 036763
01/11/19
PROFESSIONAL ENGINEER

Hazen
HAZEN AND SAWYER
1555 ROSENEATH ROAD
RICHMOND, VIRGINIA 23230
PHONE: 804-266-1400

CITY OF WINCHESTER
DEPARTMENT OF PUBLIC SERVICES
WINCHESTER, VIRGINIA

STROTHERS LANE GROUND
STORAGE TANK REPLACEMENT

CIVIL

NOTES AND DETAILS

DATE:	JANUARY 2019
HAZEN NO.:	31294-011
CONTRACT NO.:	201901
DRAWING NUMBER:	C5

File: O:\31294-RIC\31294-011\CAD_BIM\CIVIL\C05 Saved by ADARNELL Save date: 1/10/2019 2:42 PM
PLOT DATE: 1/16/2019 11:37 AM BY: ADARNELL

EROSION AND SEDIMENTATION CONTROL NOTES:

1. THE PURPOSE OF THE EROSION CONTROL MEASURES SHOWN ON THESE PLANS SHALL BE TO PRECLUDE THE TRANSPORT OF ALL WATERBORNE SEDIMENTS RESULTING FROM CONSTRUCTION ACTIVITIES FROM ENTERING ONTO ADJACENT PROPERTIES OR STATE WATERS. IF FIELD INSPECTION REVEALS THE INADEQUACY OF THE PLAN TO CONFINE SEDIMENT TO THE PROJECT SITE, APPROPRIATE MODIFICATIONS WILL BE MADE BY THE CONTRACTOR TO CORRECT ANY PLAN DEFICIENCIES.
2. ALL EROSION AND SEDIMENT CONTROL MEASURES SHALL BE INSTALLED AND MAINTAINED IN ACCORDANCE WITH THE "VIRGINIA EROSION AND SEDIMENT CONTROL HANDBOOK" (VESCH). THE CONTRACTOR SHALL BE THOROUGHLY FAMILIAR WITH ALL APPLICABLE MEASURES CONTAINED THEREIN WHICH MAY BE PERTINENT TO THIS PROJECT. MAINTENANCE WILL INCLUDE THE REPAIR OF MEASURES DAMAGED BY ANY SUBCONTRACTOR INCLUDING THOSE OF THE PUBLIC UTILITY COMPANIES.
3. SILT FENCE INTENDED TO TRAP SEDIMENT ON-SITE MUST BE CONSTRUCTED AS A FIRST STEP IN GRADING AND BE MADE FUNCTIONAL BEFORE UPSLOPE LAND DISTURBANCE TAKES PLACE.
4. SEDIMENT CONTROL MEASURES MAY REQUIRE MINOR FIELD ADJUSTMENTS AT TIME OF CONSTRUCTION TO ENSURE THEIR INTENDED PURPOSE IS ACCOMPLISHED. OFFICE OF CODE COMPLIANCE APPROVAL WILL BE REQUIRED FOR OTHER DEVIATIONS FROM THE APPROVED PLANS.
5. WHERE THE CONTRACTOR HAS STRIPPED AND STOCKPILED TOPSOIL, SILT FENCE SHALL BE PLACED AT THE TOE OF THE STOCKPILE AFTER STRIPPING OF TOPSOIL IS COMPLETED.
6. PERMANENT OR TEMPORARY SOIL STABILIZATION MUST BE APPLIED TO ALL DENUDED AREAS WITHIN 7 DAYS AFTER FINAL GRADE IS REACHED ON ANY PORTION OF THE SITE. SOIL STABILIZATION MUST ALSO BE APPLIED TO DENUDED AREAS WHICH MAY NOT BE AT FINAL GRADE BUT WILL REMAIN DORMANT (UNDISTURBED) FOR LONGER THAN 30 DAYS. SOIL STABILIZATION MEASURES INCLUDE VEGETATIVE ESTABLISHMENT, MULCHING AND THE EARLY APPLICATION OF GRAVEL BASE MATERIALS.
7. IF DISTURBED AREA STABILIZATION IS TO BE ACCOMPLISHED DURING THE MONTHS OF DECEMBER, JANUARY OR FEBRUARY, STABILIZATION SHALL CONSIST OF MULCHING IN ACCORDANCE WITH VESCH SPECIFICATION 1.75. SEEDING WILL THEN TAKE PLACE AS SOON AS THE SEASON PERMITS.
8. TEMPORARY EROSION CONTROL MEASURES ARE NOT TO BE REMOVED UNTIL ALL DISTURBED AREAS ARE STABILIZED. AFTER STABILIZATION IS COMPLETE, ALL MEASURES SHALL BE REMOVED WITHIN 30 DAYS. TRAPPED SEDIMENT SHALL BE SPREAD AND SEEDED.
9. TOPSOIL SHALL BE REMOVED AND STOCKPILED SEPARATE FROM OTHER SOIL. WHEN CONSTRUCTION IS COMPLETED, THE TOPSOIL SHALL BE RESTORED TO ITS PREVIOUS LOCATION AND CONDITIONS TO THE GREATEST EXTENT PRACTICAL. IN AREAS WHERE TOPSOIL RESTORATION IS NOT POSSIBLE, POST-CONSTRUCTION TOPSOIL CONDITIONS SHALL BE REESTABLISHED TO PRE-CONSTRUCTION CONDITIONS UTILIZING SOIL AMENDMENTS AS APPROVED BY THE OWNER.

STONE CONSTRUCTION ENTRANCE

CE

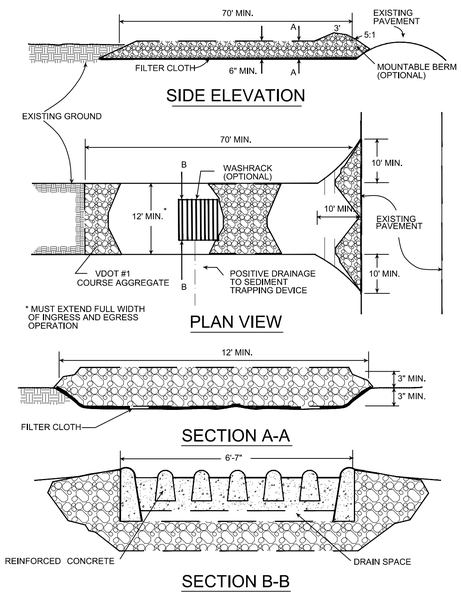

SOURCE: ADAPTED from 1983 Maryland Standards for Soil erosion and Sediment Control, and Va. DSWC

Plate 3.02-1

CONSTRUCTION OF A SILT FENCE (WITHOUT WIRE SUPPORT)

SF

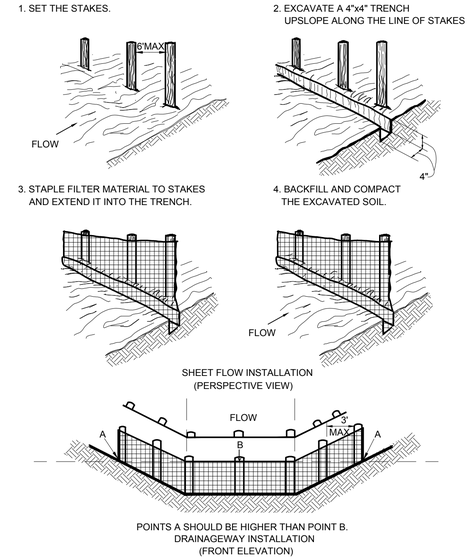

SEEDING SPECIFICATIONS

TABLE 3.31-B
(REVISED JUNE 2003)
TEMPORARY SEEDING SPECIFICATIONS
QUICK REFERENCE FOR ALL REGIONS

SEED		
APPLICATION DATES	SPECIES	APPLICATION RATES
SEPT. 1 - FEB. 15	50/50 MIX OF ANNUAL RYEGRASS (LOLIUM MULTI-FLORUM & CEREAL (WINTER) RYE (SECALE CEREALE)	50-100 (LBS./ACRE)
FEB. 16-APR. 30	ANNUAL RYEGRASS (LOLIUM MULTI-FLORUM)	60-100 (LBS./ACRE)
MAY. 1-AUG. 31	GERMAN MILLET	50 (LBS./ACRE)

FERTILIZER & LIME

- APPLY 10-10-10 FERTILIZER AT A RATE OF 450 LBS./ACRE (OR 10 LBS./1,000 SQ. FT.)
- APPLY PULVERIZED AGRICULTURAL LIMESTONE AT A RATE OF 2 TONS/ACRE (OR 90 LBS./1,000 SQ. FT.)

NOTE:
1. A SOIL TEST IS NECESSARY TO DETERMINE THE ACTUAL AMOUNT OF LIME REQUIRED TO ADJUST THE SOIL PH OF SITE.
2. INCORPORATE THE LIME AND FERTILIZER INTO THE TOP 4-6 INCHES OF THE SOIL BY DISKING OR BY OTHER MEANS.
3. WHEN APPLYING SLOWLY AVAILABLE NITROGEN, USE RATES AVAILABLE IN EROSION & SEDIMENT CONTROL TECHNICAL BULLETIN #4 2003 NUTRIENT MANAGEMENT FOR DEVELOPMENT SITES AT http://www.dcr.state.va.us/sw/e&s.htm#pubs

TABLE 3.32-C
SITE SPECIFIC SEEDING MIXTURES
FOR APPALACHIAN/MOUNTAIN AREA

	Total Lbs. Per Acre
Minimum Care Lawn	
- Commercial or Residential	200-250 lbs.
- Kentucky 31 or Turf-Type Tall Fescue	90-100%
- Improved Perennial Ryegrass *	0-10%
- Kentucky Bluegrass	0-10%
High-Maintenance Lawn	
Minimum of three (3) up to five (5) varieties of bluegrass from approved list for use in Virginia.	125 lbs.
General Slope (3:1 or less)	
- Kentucky 31 Fescue	128 lbs.
- Red Top Grass	2 lbs.
- Seasonal Nurse Crop **	20 lbs.
	150 lbs.
Low-Maintenance Slope (Steeper than 3:1)	
- Kentucky 31 Fescue	108 lbs.
- Red Top Grass	2 lbs.
- Seasonal Nurse Crop **	20 lbs.
- Crownvetch ***	20 lbs.
	150 lbs.

* Perennial Ryegrass will germinate faster and at lower soil temperatures than fescue, thereby providing cover and erosion resistance for seedbed.

** Use seasonal nurse crop in accordance with seeding dates as stated below:
March, April through May 15th ..... Annual Rye
May 16th through August 15th ..... Foxtail Millet
August 16th through September, October ..... Annual Rye
November through February ..... Winter Rye

*** If Flatpea is used, increase to 30 lbs./acre. All legume seed must be properly inoculated. Weeping Lovegrass may also be included in any slope or low-maintenance mixture during warmer seeding periods; add 10-20 lbs/acre in mixes.

REV	ISSUED FOR	DATE	BY
1	CONSTRUCTION SET	1/19	JKP

PROJECT ENGINEER: J. PETERY
DESIGNED BY: J. PETERY
DRAWN BY: J. JORDAN
CHECKED BY: G. ROGERS
IF THIS BAR DOES NOT MEASURE 1" THEN DRAWING IS NOT TO FULL SCALE (0 1/2" 1")

CONSTRUCTION SET

COMMONWEALTH OF VIRGINIA
JOEL M. PETERY
Lic. No. 036763
01/11/19
PROFESSIONAL ENGINEER

Hazen
HAZEN AND SAWYER
1555 ROSENEATH ROAD
RICHMOND, VIRGINIA 23230
PHONE: 804-266-1400

CITY OF WINCHESTER
DEPARTMENT OF PUBLIC SERVICES
WINCHESTER, VIRGINIA

STROTHERS LANE GROUND
STORAGE TANK REPLACEMENT

CIVIL

EROSION AND SEDIMENT CONTROL
NOTES AND DETAILS

DATE: JANUARY 2019
HAZEN NO.: 31294-011
CONTRACT NO.: 201901
DRAWING NUMBER: C6

File: O:\31294-RICO\31294-011\CAD_BIM\CIVIL\C06 Saved by ADARNELL Save date: 1/14/2019 10:13 AM
PLOT DATE: 1/16/2019 11:17 AM BY: ADARNELL

CITY OF WINCHESTER, VA
DEPARTMENT OF PUBLIC UTILITIES

FIRE HYDRANT SHALL BE TRAFFIC MODEL

RESTRAINTS SHALL BE BY MEGA-LUG FLANGES

4 – 1/2" STREAMER NOZZLE SHALL FACE THE ROADWAY

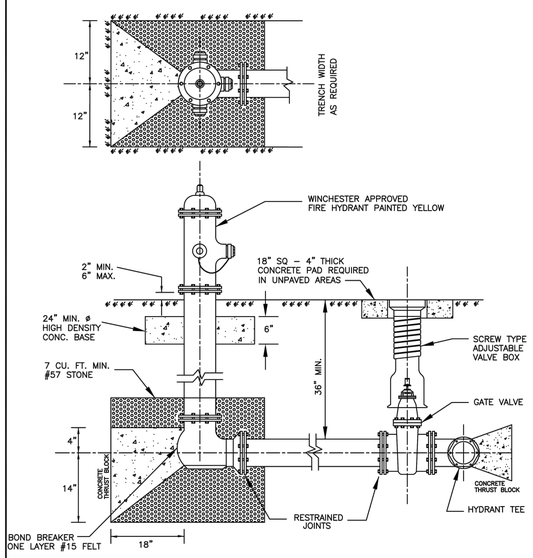

STANDARD DETAIL NO. WD– 7	FIRE HYDRANT INSTALLATION SCALE: NONE	DATE: 10/2017

CITY OF WINCHESTER, VA
DEPARTMENT OF PUBLIC UTILITIES

TYPICAL RESILIENT SEAT VALVE INSTALLATION:

VALVE BOX AND BOOT SHALL BE CAST IRON

VALVE BOX COVER SHALL BE MARKED "WATER"

VALVE TOP SHALL BE FLUSH WITH FINISHED GRADE

18" X 18" CONCRETE PAD SHALL BE PLACED AROUND VALVE BOXES LOCATED OUTSIDE OF PAVEMENT AREAS

VALVE BOX SHALL BE SCREW TYPE FOR ADJUSTMENT

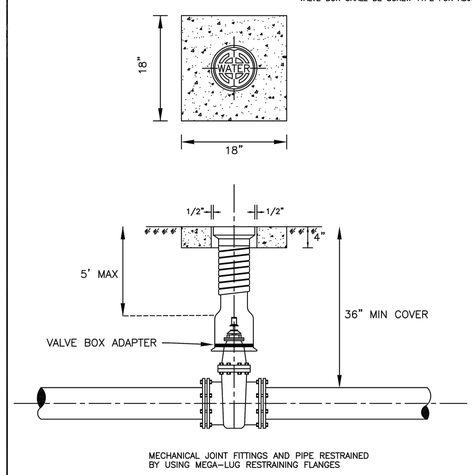

STANDARD DETAIL NO. WD– 8	TYPICAL VALVE & BOX INSTALLATION SCALE: NONE	DATE: 10/2017

CITY OF WINCHESTER, VA
DEPARTMENT OF PUBLIC UTILITIES

MFG. BY NEENAH FOUNDRY
CAT. NO. R–1643
FRAME: COMPONENT NO. N1371–0061
LID: COMPONENT NO. N1371–0063
CAST GRAY IRON
ASTM A–48 CLASS 35B
FINISH – NO PAINT

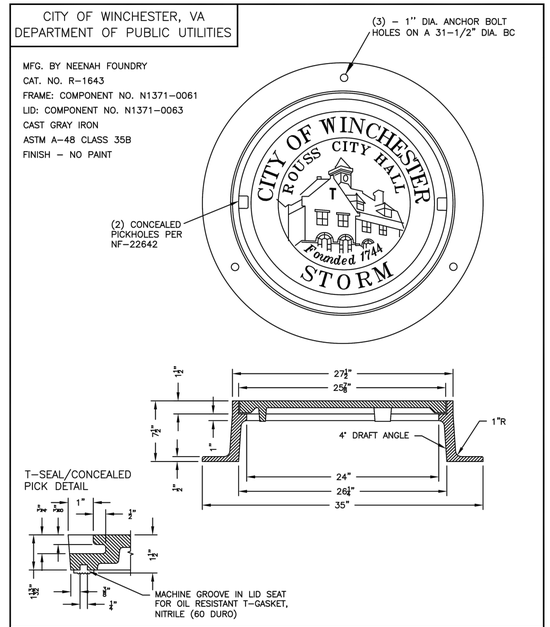

STANDARD DETAIL NO. SD–3	28" STORM MANHOLE LID AND FRAME SCALE: NONE	DATE: 10/2017

CITY OF WINCHESTER, VA
DEPARTMENT OF PUBLIC UTILITIES

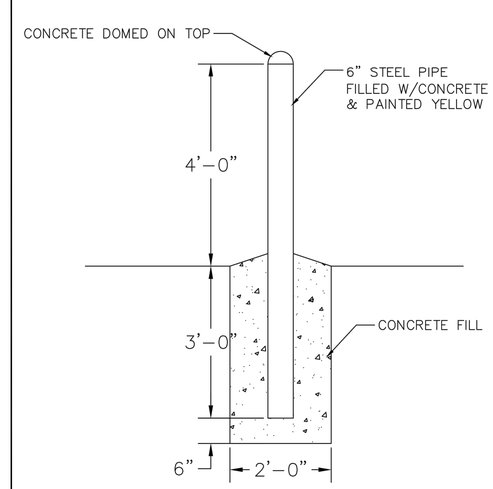

BOLLARD TYPE III

NO SCALE

STANDARD DETAIL NO. SW–5	BOLLARD TYPE III SCALE: NONE	DATE: 10/2017

CITY OF WINCHESTER, VA
DEPARTMENT OF PUBLIC UTILITIES

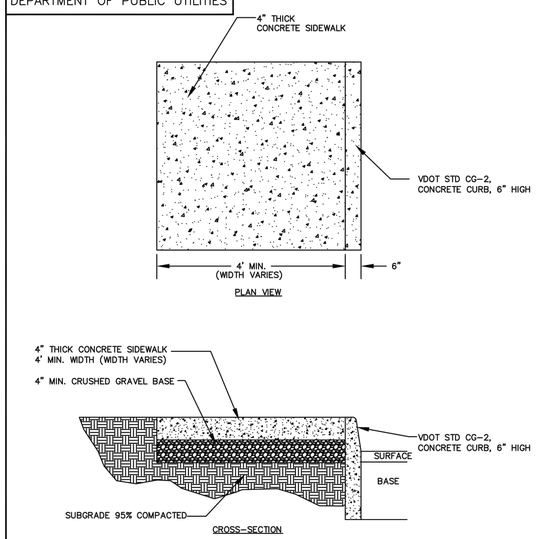

STANDARD DETAIL NO. SW–1	STANDARD CONCRETE SIDEWALK SCALE: NONE	DATE: 10/2017

CITY OF WINCHESTER, VA
DEPARTMENT OF PUBLIC UTILITIES

* WHERE THE TRENCH BOTTOM IS ROCK, IT SHALL BE EXCAVATED TO A MINIMUM OF 8" BELOW THE BOTTOM OF THE PIPE AND BACKFILLED WITH BEDDING MATERIAL FREE OF ROOTS, DEBRIS & STONES

* WHERE SUBGRADE IS UNSTABLE, PIPE SHALL BE BEDDED ON A MINIMUM OF 8" BEDDING MATERIAL

* BACKFILL TO BE PLACED IN 12" LIFTS AND COMPACTED TO 90% OF MAXIMUM DRY DENSITY

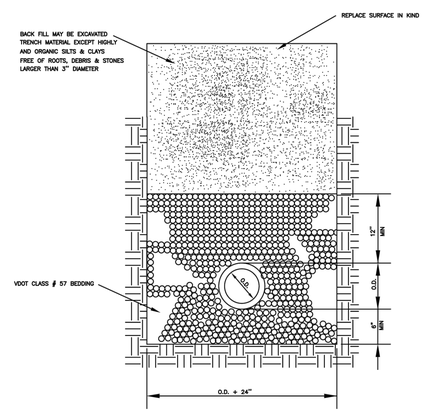

STANDARD DETAIL NO. WS – 1	STANDARD BEDDING DETAIL OUTSIDE TRAFFIC AREAS (PVC OR DIP) SCALE: NONE	DATE: 10/2017

CITY OF WINCHESTER, VA
DEPARTMENT OF PUBLIC UTILITIES

* WHERE THE TRENCH BOTTOM IS ROCK, IT SHALL BE EXCAVATED TO A MINIMUM OF 8" BELOW THE BOTTOM OF THE PIPE AND BACKFILLED WITH BEDDING MATERIAL FREE OF ROOTS, DEBRIS & STONES

* WHERE SUBGRADE IS UNSTABLE, PIPE SHALL BE BEDDED ON A MINIMUM OF 8" BEDDING MATERIAL

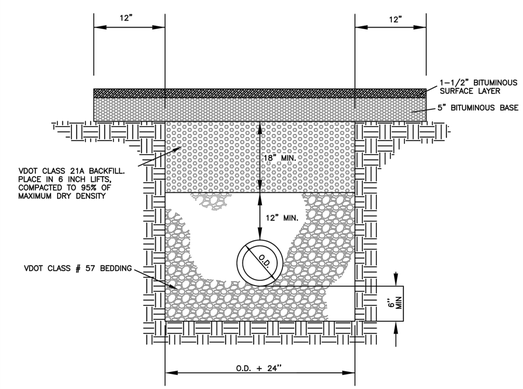

STANDARD DETAIL NO. WS – 2	STANDARD BEDDING DETAIL WITHIN TRAFFIC AREAS (PVC OR DIP) SCALE: NONE	DATE: 10/2017

REV	ISSUED FOR	DATE	BY
1	CONSTRUCTION SET	1/19	JKP

PROJECT ENGINEER:	J. PETERY
DESIGNED BY:	J. PETERY
DRAWN BY:	J. JORDAN
CHECKED BY:	G. ROGERS
IF THIS BAR DOES NOT MEASURE 1" THEN DRAWING IS NOT TO FULL SCALE	0 1/2" 1"

CONSTRUCTION SET

COMMONWEALTH OF VIRGINIA
JOELLES PETERY
Lic. No.036763
01/11/19
PROFESSIONAL ENGINEER

Hazen

HAZEN AND SAWYER
1555 ROSENEATH ROAD
RICHMOND, VIRGINIA 23230
PHONE: 804-266-1400

CITY OF WINCHESTER
DEPARTMENT OF PUBLIC SERVICES
WINCHESTER, VIRGINIA

STROTHERS LANE GROUND
STORAGE TANK REPLACEMENT

CIVIL

CITY STANDARD DETAILS

DATE:	JANUARY 2019
HAZEN NO.:	31294-011
CONTRACT NO.:	201901
DRAWING NUMBER:	C7

File: O:\31294-RIC\31294-011\CAD_BIM\CIVIL\C07 Saved by ADARNELL Save date: 1/14/2019 10:12 AM
PLOT DATE: 1/16/2019 11:17 AM BY: ADARNELL

NOTES:

1. PROVIDE 12" TIDEFLEX MODEL TF-1 CHECK VALVE ON END OF 12" DRAIN.
2. ALL PIPING SHALL BE RESTRAINED DUCTILE IRON PIPE UNLESS OTHERWISE NOTED.

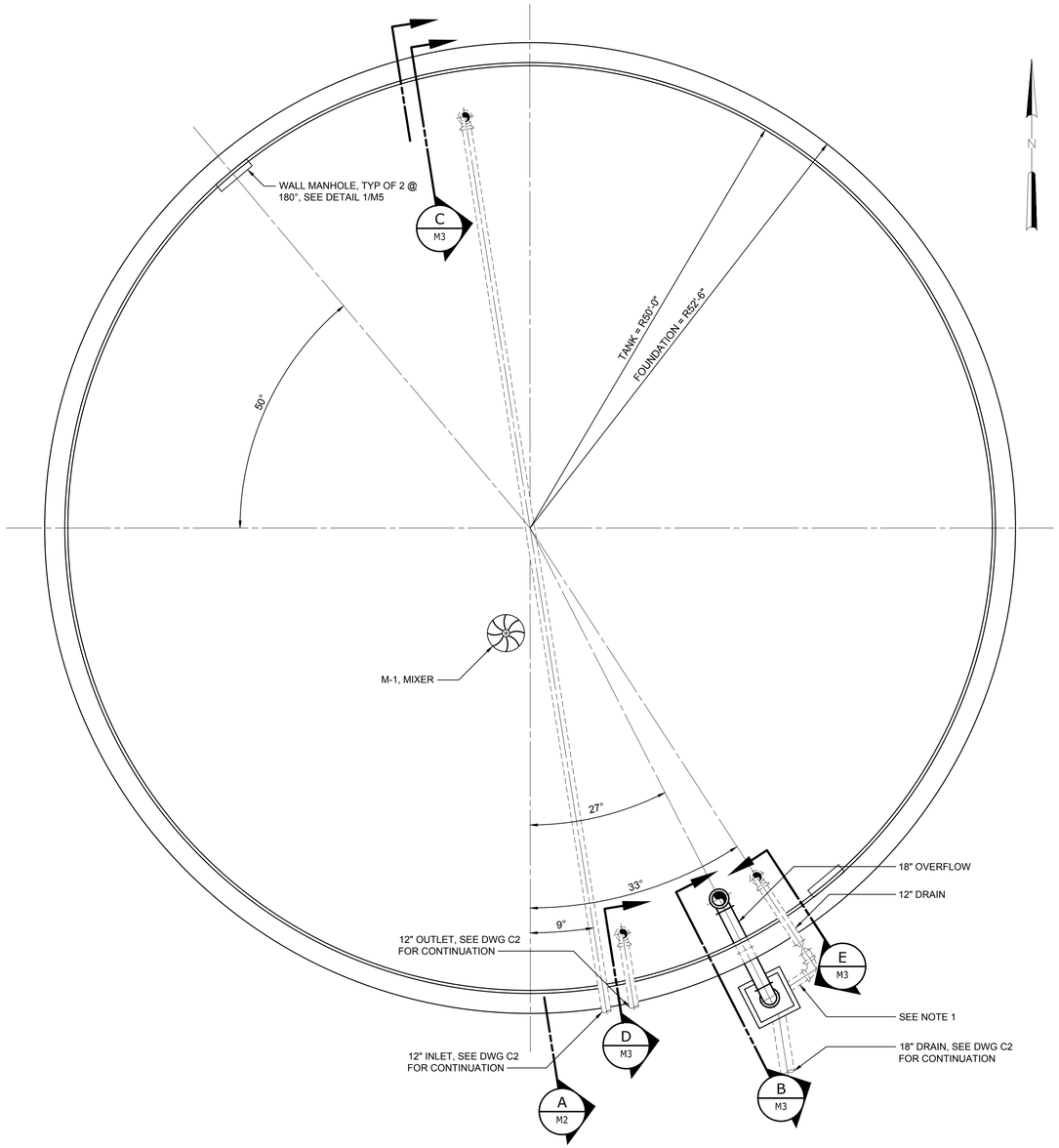

BOTTOM PLAN
1/8" = 1'-0"

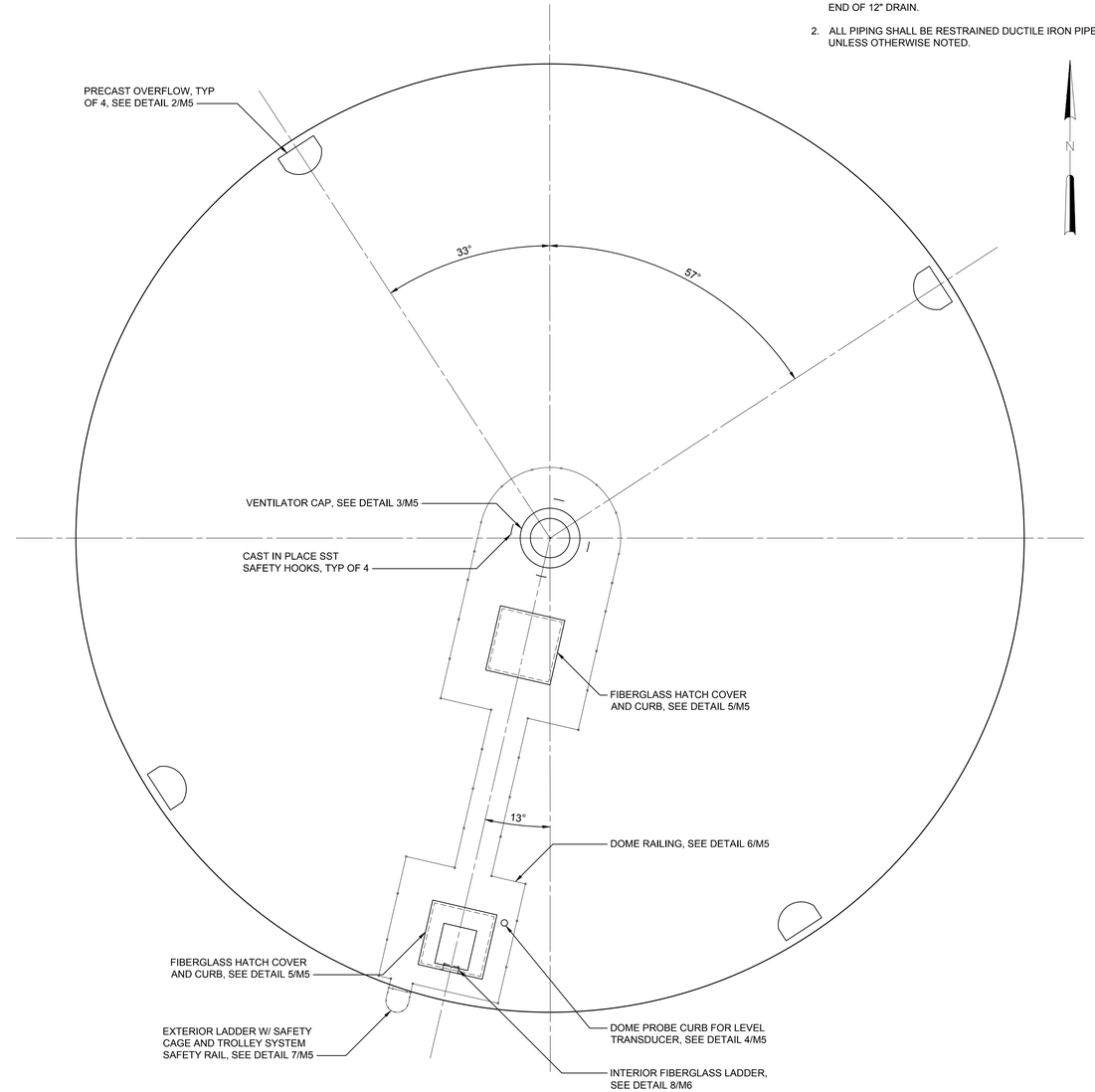

TOP PLAN
1/8" = 1'-0"

REV	ISSUED FOR	DATE	BY
1	CONSTRUCTION SET	1/19	JKP

PROJECT ENGINEER:	J. PETERY
DESIGNED BY:	J. PETERY
DRAWN BY:	J. JORDAN
CHECKED BY:	G. ROGERS
IF THIS BAR DOES NOT MEASURE 1" THEN DRAWING IS NOT TO FULL SCALE	0 1/2" 1"

CONSTRUCTION SET

COMMONWEALTH OF VIRGINIA
JOEL AS PETERY
Lic. No. 036763
01/11/19
PROFESSIONAL ENGINEER

Hazen

HAZEN AND SAWYER
1555 ROSENEATH ROAD
RICHMOND, VIRGINIA 23230
PHONE: 804-266-1400

CITY OF WINCHESTER
DEPARTMENT OF PUBLIC SERVICES
WINCHESTER, VIRGINIA

STROTHERS LANE GROUND STORAGE TANK REPLACEMENT

GROUND STORAGE TANK

MECHANICAL

BOTTOM AND TOP PLAN

DATE:	JANUARY 2019
HAZEN NO.:	31294-011
CONTRACT NO.:	201901
DRAWING NUMBER:	M1

File: O:\31294-RICO\31294-011\CAD_BIM\MECHANICAL\M01 Saved by ADARNELL Save date: 1/14/2019 10:20 AM
PLOT DATE: 1/16/2019 11:18 AM BY: ADARNELL

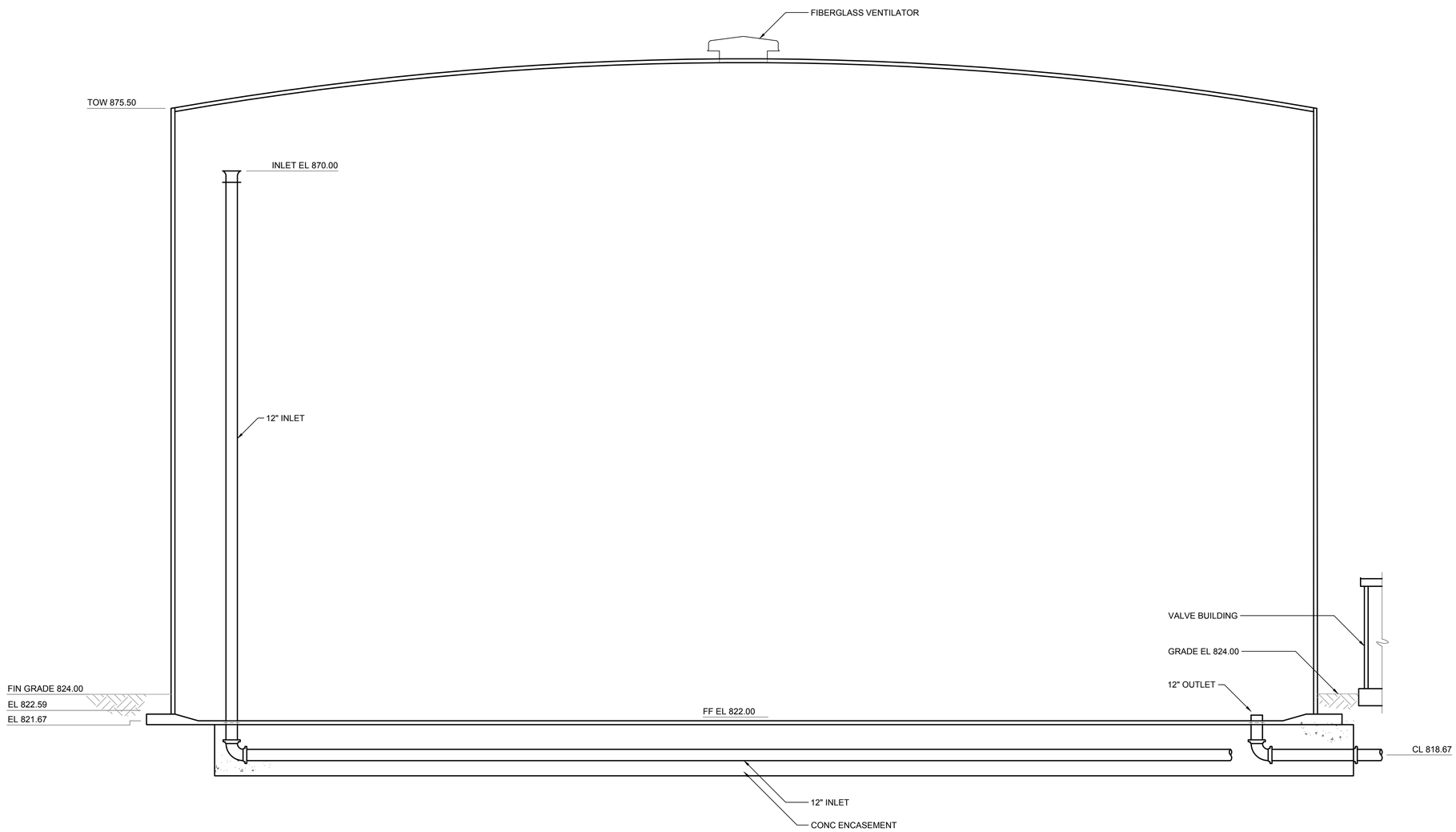

SECTION A / M1
3/16" = 1'-0"

REV	ISSUED FOR	DATE	BY
1	CONSTRUCTION SET	1/19	JKP

PROJECT ENGINEER:	J. PETERY
DESIGNED BY:	J. PETERY
DRAWN BY:	J. JORDAN
CHECKED BY:	G. ROGERS
IF THIS BAR DOES NOT MEASURE 1" THEN DRAWING IS NOT TO FULL SCALE	0 1/2" 1"

CONSTRUCTION SET

COMMONWEALTH OF VIRGINIA
JOEL AS PETERY
Lic. No. 036763
01/11/19
PROFESSIONAL ENGINEER

Hazen

HAZEN AND SAWYER
1555 ROSENEATH ROAD
RICHMOND, VIRGINIA 23230
PHONE: 804-266-1400

CITY OF WINCHESTER
DEPARTMENT OF PUBLIC SERVICES
WINCHESTER, VIRGINIA

STROTHERS LANE GROUND
STORAGE TANK REPLACEMENT

GROUND STORAGE TANK

MECHANICAL

SECTIONS I

DATE:	JANUARY 2019
HAZEN NO.:	31294-011
CONTRACT NO.:	201901
DRAWING NUMBER:	M2

File: O:\31294-RIC\31294-011\CAD_BIM\MECHANICAL\M02 Saved by ADARNELL Save date: 1/14/2019 10:19 AM
PLOT DATE: 1/16/2019 11:19 AM BY: ADARNELL

NOTE:

1. PROVIDE 12" X 12" X 24" CONCRETE PIER SUPPORT.

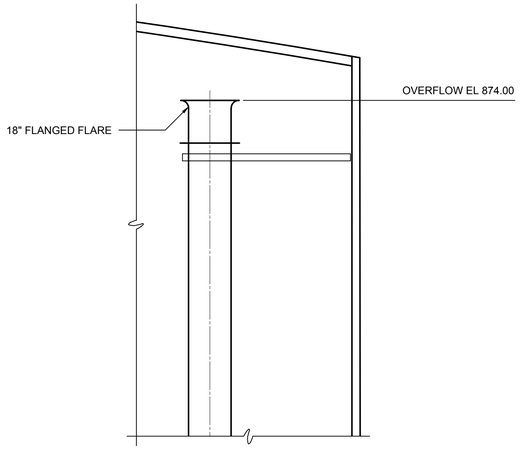

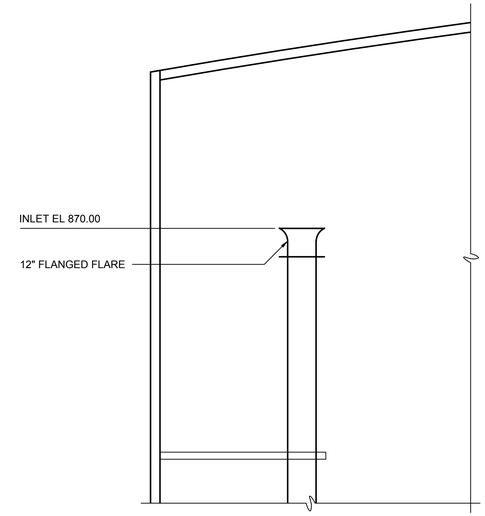

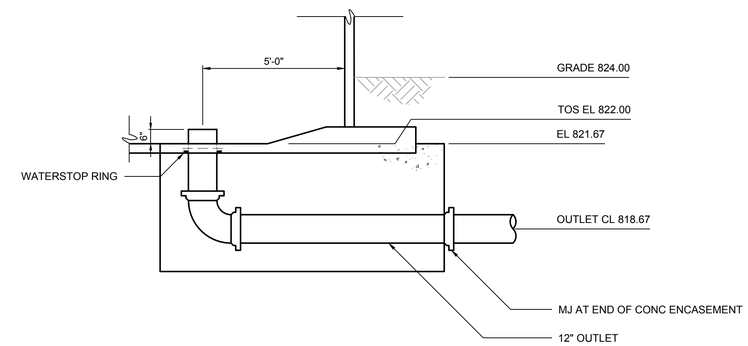

SECTION D
3/8" = 1'-0"
M1

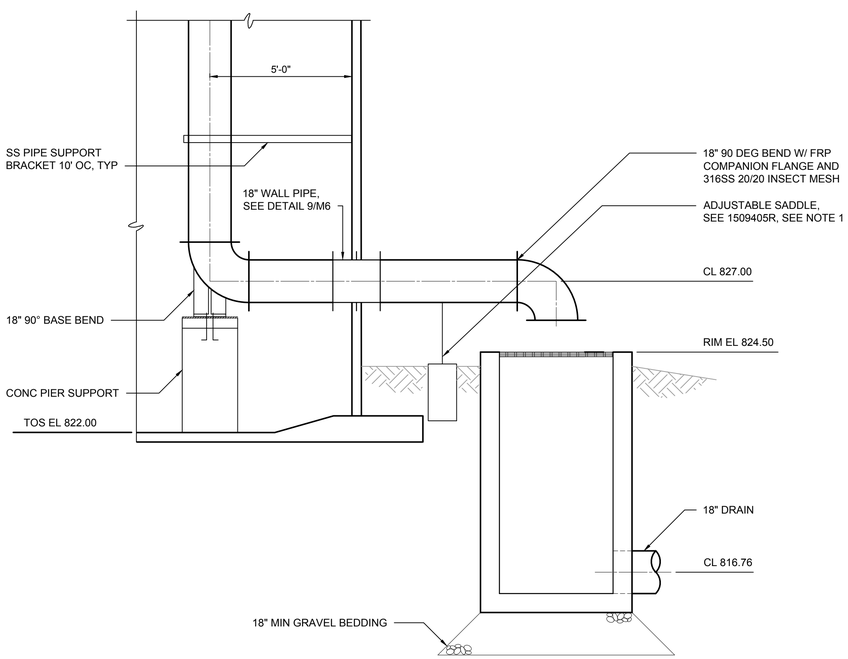

SECTION B
3/8" = 1'-0"
M1

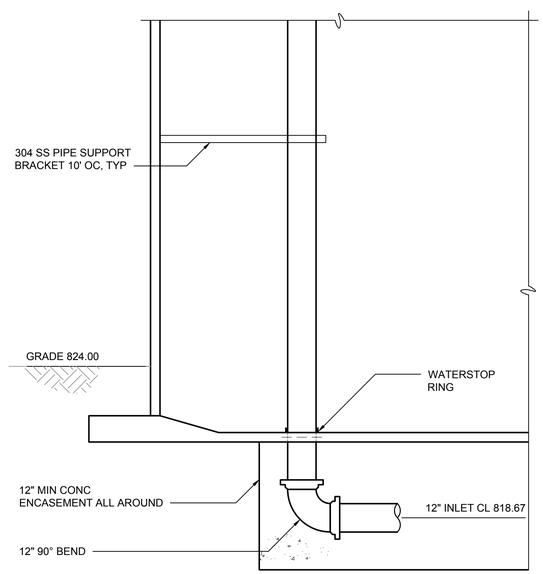

SECTION C
3/8" = 1'-0"
M1

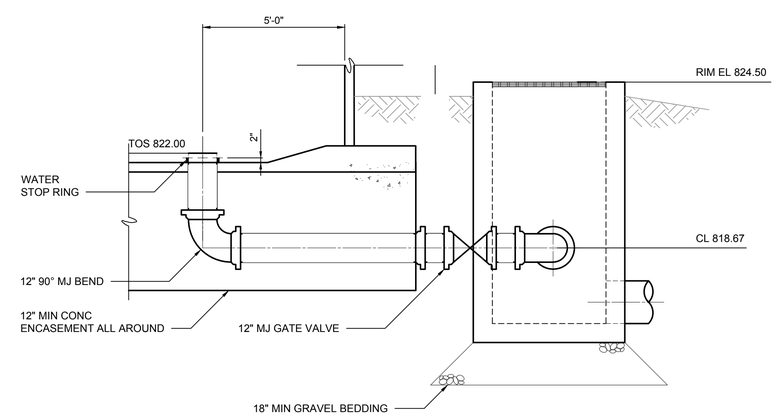

SECTION E
3/8" = 1'-0"
M1

REV	ISSUED FOR	DATE	BY
1	CONSTRUCTION SET	1/19	JKP

PROJECT ENGINEER:	J. PETERY
DESIGNED BY:	J. PETERY
DRAWN BY:	J. JORDAN
CHECKED BY:	G. ROGERS

IF THIS BAR DOES NOT MEASURE 1" THEN DRAWING IS NOT TO FULL SCALE 0 1/2" 1"

CONSTRUCTION SET

COMMONWEALTH OF VIRGINIA
JOPLIN PETERY
Lic. No. 036763
PROFESSIONAL ENGINEER
01/11/19

Hazen

HAZEN AND SAWYER
1555 ROSENEATH ROAD
RICHMOND, VIRGINIA 23230
PHONE: 804-266-1400

CITY OF WINCHESTER
DEPARTMENT OF PUBLIC SERVICES
WINCHESTER, VIRGINIA

STROTHERS LANE GROUND
STORAGE TANK REPLACEMENT

GROUND STORAGE TANK

MECHANICAL

SECTIONS II

DATE:	JANUARY 2019
HAZEN NO.:	31294-011
CONTRACT NO.:	201901
DRAWING NUMBER:	M3

File: O:\31294-RIC\31294-011\CAD_BIM\MECHANICAL\M3 Saved by ADARNELL Save date: 1/14/2019 10:18 AM
PLOT DATE: 1/16/2019 11:19 AM BY: ADARNELL

NOTES:

1. PROVIDE THREADED NIPPLE, REDUCER, 1/4" BALL VALVE, AND TUBING ADAPTOR.
2. PROVIDE HACH MODEL CLF10 SC ANALYZER AND SC4200 C DIGITAL CONTROLLER.
3. PROVIDE SAMPLE TUBING INSTALLED IN 1-1/2" PVC PIPING FROM TANK DRAIN PIPING TO ANALYZER. ROUTE PIPING OVERHEAD WITH 7 FOOT MINIMUM CLEARANCE FROM FLOOR AND SUPPORT FROM CEILING.

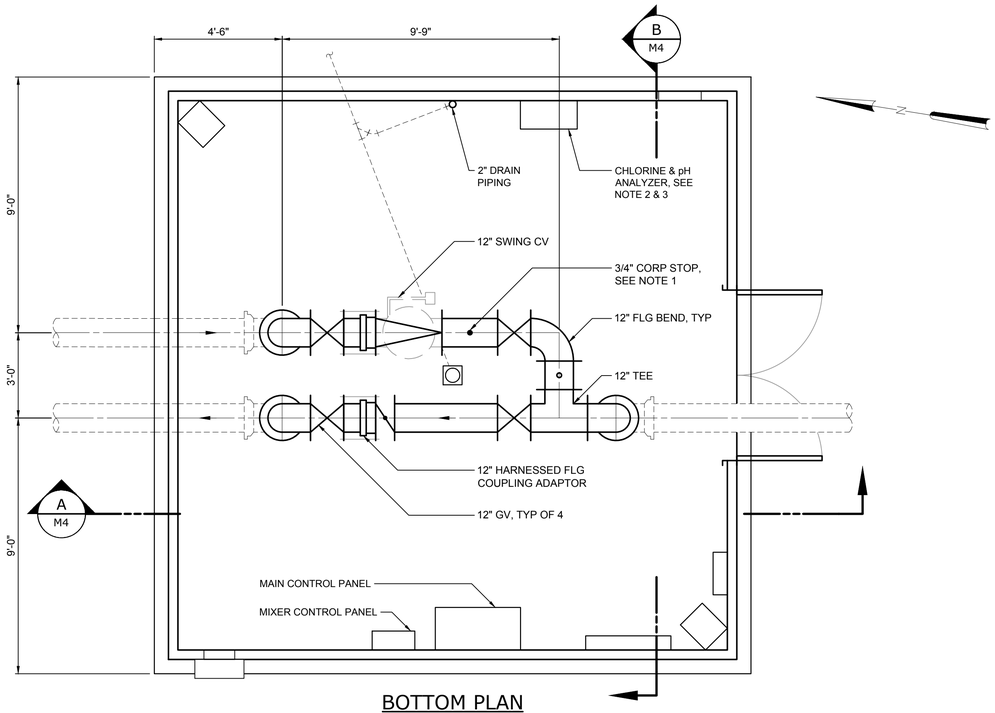

BOTTOM PLAN
3/8" = 1'-0"

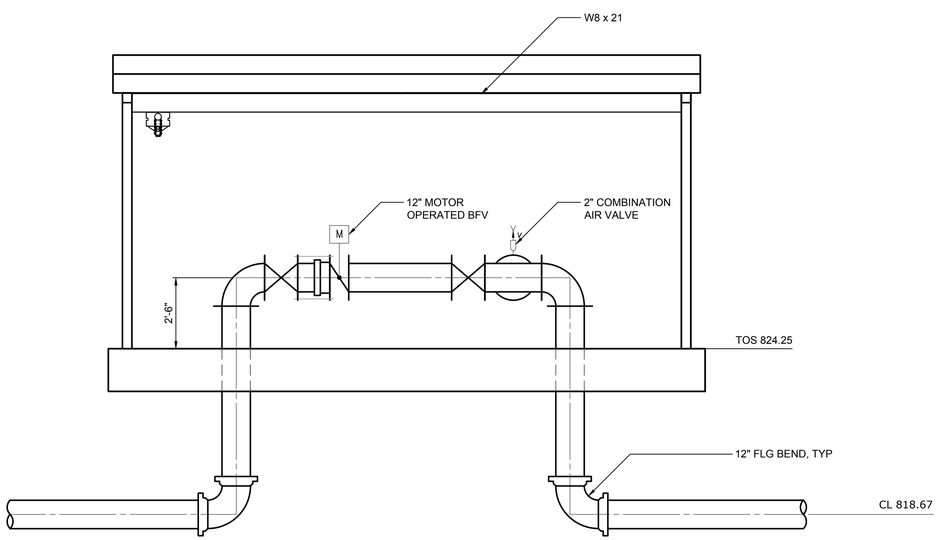

SECTION A M4
3/8" = 1'-0"

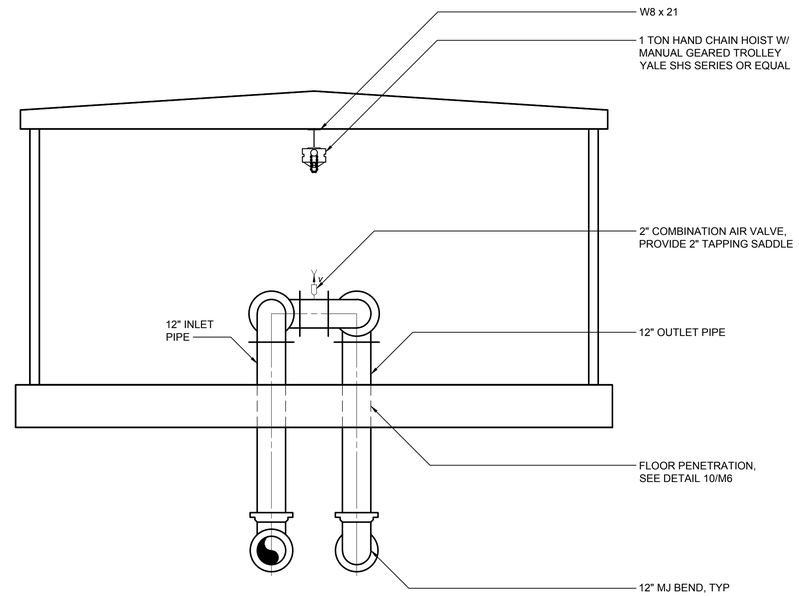

SECTION B M4
3/8" = 1'-0"

REV	ISSUED FOR	DATE	BY
1	CONSTRUCTION SET	1/19	JKP

PROJECT ENGINEER:	J. PETERY
DESIGNED BY:	J. PETERY
DRAWN BY:	J. JORDAN
CHECKED BY:	G. ROGERS

IF THIS BAR DOES NOT MEASURE 1" THEN DRAWING IS NOT TO FULL SCALE 0 1/2" 1"

CONSTRUCTION SET

COMMONWEALTH OF VIRGINIA
JOELLEN PETERY
Lic. No. 036763
01/11/19
PROFESSIONAL ENGINEER

Hazen
HAZEN AND SAWYER
1555 ROSENEATH ROAD
RICHMOND, VIRGINIA 23230
PHONE: 804-266-1400

CITY OF WINCHESTER
DEPARTMENT OF PUBLIC SERVICES
WINCHESTER, VIRGINIA

STROTHERS LANE GROUND STORAGE TANK REPLACEMENT

VALVE BUILDING

MECHANICAL

PLAN AND SECTIONS

DATE:	JANUARY 2019
HAZEN NO.:	31294-011
CONTRACT NO.:	201901
DRAWING NUMBER:	M4

File: O:\31294-R\C31294-011\CAD_BIM\MECHANICAL\M4 Saved by ADARNELL Save date: 1/14/2019 10:22 AM
PLOT DATE: 1/16/2019 11:20 AM BY: ADARNELL

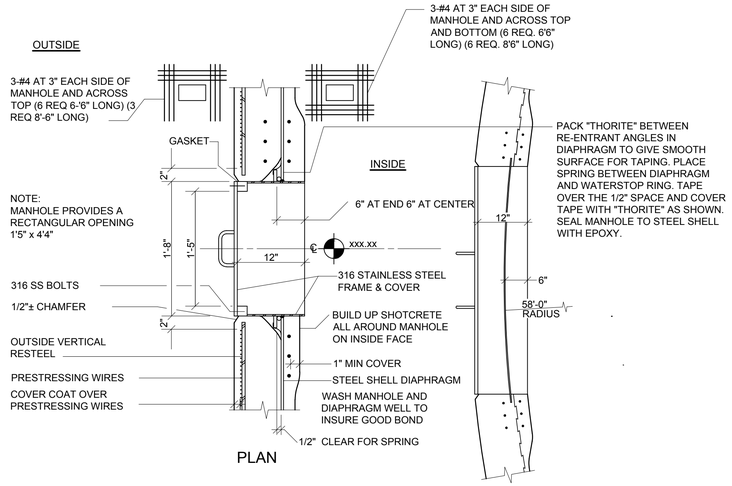

TYPICAL WALL MANHOLE

DETAIL 1 / NTS M1

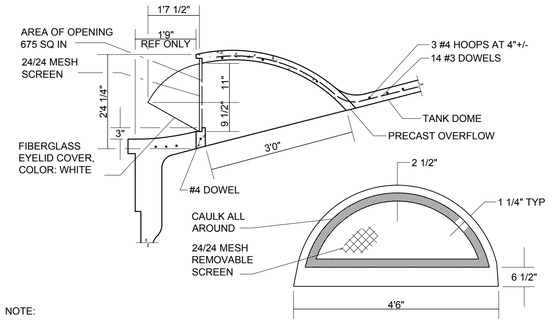

NOTE:

1. KEEP SHOTCRETE REBOUND CLEANED OFF OF OVERFLOW. LEAVE PLYWOOD COVER IN PLACE UNTIL ALL SHOTCRETING IS COMPLETE.

TYPICAL PRECAST CONCRETE OVERFLOW WITH FIBERGLASS HOOD

DETAIL 2 / NTS M1

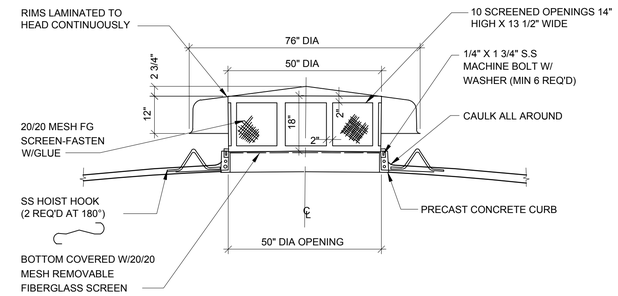

TYPICAL FIBERGLASS VENTILATOR

DETAIL 3 / NTS M1

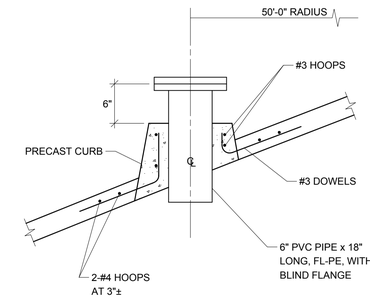

NOTE: PLACE PIPE PLUMB

TYPICAL 6" DOME PROBE CURB

DETAIL 4 / NTS M1

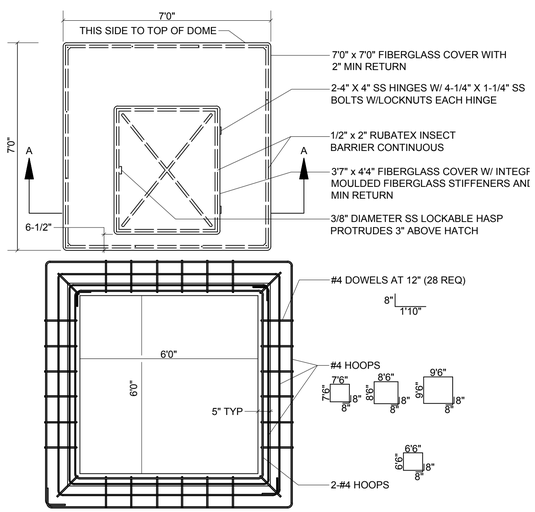

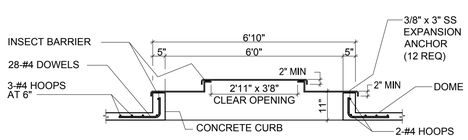

SECTION A-A

TYPICAL FIBERGLASS HATCH, COVER, AND CURB

DETAIL 5 / NTS M1

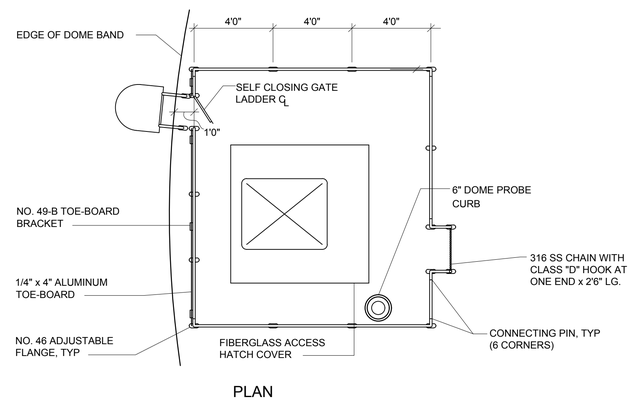

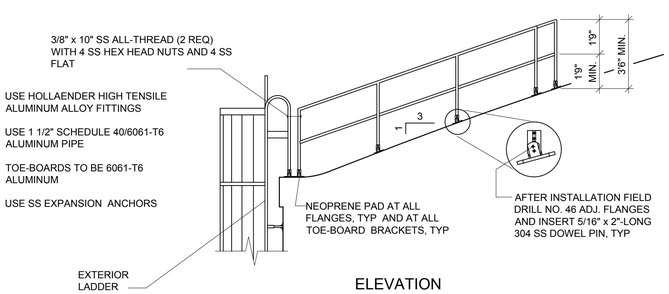

TYPICAL DOME RAILING

DETAIL 6 / NTS M2

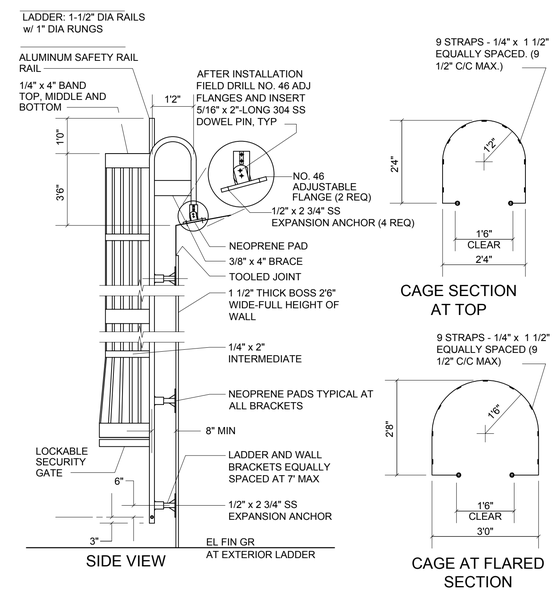

NOTES:

1. ALL TUBULAR MATERIAL TO BE NOMINAL DIAMETER SCHEDULE 40 ALUMINUM PIPE 6061-T6 OR 6063-T6.
2. PLATES AND GUSSETS TO BE STRUCTURAL GRADE ALUMINUM 6061-T6.

TYPICAL EXTERIOR LADDER WITH SAFETY CAGE

DETAIL 7 / NTS M2

REV	ISSUED FOR	DATE	BY
1	CONSTRUCTION SET	1/19	JKP

PROJECT ENGINEER:	J. PETERY
DESIGNED BY:	J. PETERY
DRAWN BY:	M. BRANDT
CHECKED BY:	G. ROGERS

IF THIS BAR DOES NOT MEASURE 1" THEN DRAWING IS NOT TO FULL SCALE (0 1/2" 1")

CONSTRUCTION SET

COMMONWEALTH OF VIRGINIA — JOEL K. PETERY — Lic. No. 036763 — 01/11/19 — PROFESSIONAL ENGINEER

Hazen

HAZEN AND SAWYER
1555 ROSENEATH ROAD
RICHMOND, VIRGINIA 23230
PHONE: 804-266-1400

CITY OF WINCHESTER
DEPARTMENT OF PUBLIC SERVICES
WINCHESTER, VIRGINIA

STROTHERS LANE GROUND STORAGE TANK REPLACEMENT

MECHANICAL

TYPICAL DETAILS I

DATE:	JANUARY 2019
HAZEN NO.:	31294-011
CONTRACT NO.:	201901
DRAWING NUMBER:	M5

File: O:\31294-RICS\31294-011\CAD_BIM\MECHANICAL\M05 Saved by ADARNELL Save date: 1/14/2019 10:25 AM
PLOT DATE: 1/16/2019 11:20 AM BY: ADARNELL

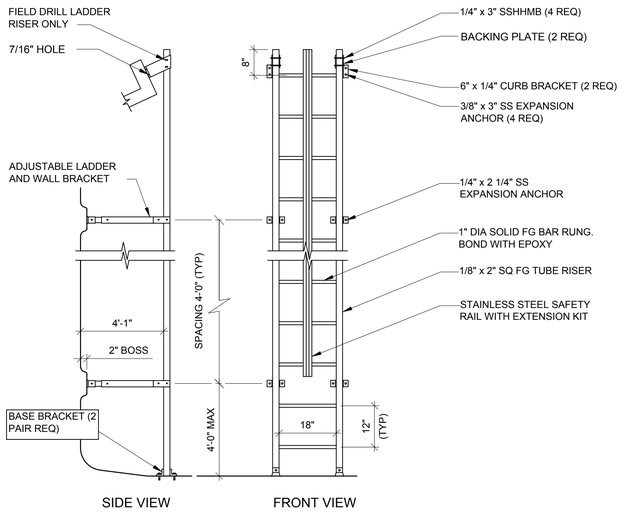

NOTE:

1. 1/4" X 2" FLAT BAR FIBERGLASS CROSS-BRACE TO BE PROVIDED FOR BRACING WALL BRACKET SUPPORTS ON EVERY BRACKET.

INTERIOR FIBERGLASS LADDER WITH SST SAFETY RAIL

DETAIL 8
NTS M1

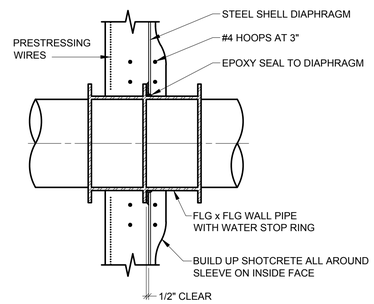

TYPICAL WALL PIPE

DETAIL 9
NTS M3

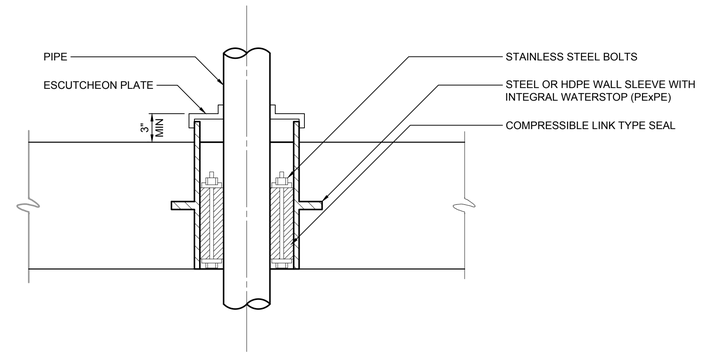

TYPICAL FLOOR PENETRATION

DETAIL 10
NTS M4

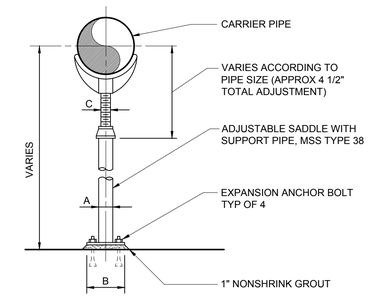

ADJUSTABLE SADDLE

1509405R

REV	ISSUED FOR	DATE	BY
1	CONSTRUCTION SET	1/19	JKP

PROJECT ENGINEER: J. PETERY
DESIGNED BY: J. PETERY
DRAWN BY: M. BRANDT
CHECKED BY: G. ROGERS
IF THIS BAR DOES NOT MEASURE 1" THEN DRAWING IS NOT TO FULL SCALE 0 1/2" 1"

CONSTRUCTION SET

COMMONWEALTH OF VIRGINIA
JOEL M. PETERY
Lic. No. 036763
01/11/19
PROFESSIONAL ENGINEER

Hazen
HAZEN AND SAWYER
1555 ROSENEATH ROAD
RICHMOND, VIRGINIA 23230
PHONE: 804-266-1400

CITY OF WINCHESTER
DEPARTMENT OF PUBLIC SERVICES
WINCHESTER, VIRGINIA

STROTHERS LANE GROUND STORAGE TANK REPLACEMENT

MECHANICAL

TYPICAL DETAILS II

DATE: JANUARY 2019
HAZEN NO.: 31294-011
CONTRACT NO.: 201901
DRAWING NUMBER: M6

File: O:\31294-RC\31294-011\CAD_BIM\MECHANICAL\M06 Saved by ADARNELL Save date: 1/14/2019 10:24 AM
PLOT DATE: 1/16/2019 11:21 AM BY: ADARNELL

LIGHTING:

X DENOTES FIXTURE TYPE (TYP.)
SEE SPECIFICATION 16500 FOR FIXTURE SCHEDULE
# DENOTES CIRCUIT NUMBER (TYP.)

RECTANGULAR FIXTURE

LEFT: CEILING MOUNTED FIXTURE
RIGHT: WALL MOUNTED FIXTURE

EMERGENCY WALL-MOUNTED FIXTURE:
LEFT: STANDARD
RIGHT: REMOTE-HEAD

LEFT: CEILING MOUNTED EXIT SIGN
RIGHT: WALL MOUNTED EXIT SIGN
SHADED PORTION DENOTES SIGN FACE

POLE-MOUNTED FIXTURE

PHOTOCELL

LEFT: CEILING MOUNTED OCCUPANCY SENSOR
RIGHT: WALL MOUNTED OCCUPANCY SENSOR
X DENOTES TYPE

RECEPTACLES:

X DENOTES RECEPTACLE TYPE (TYP.):
GFCI DENOTES GROUND FAULT CIRCUIT INTERRUPT
UPS DENOTES UNINTERRUPTIBLE POWER SUPPLY
WPCR DENOTES WEATHERPROOF CORROSION RESISTANT
# DENOTES CIRCUIT NUMBER (TYP.)

RECEPTACLES:
LEFT: SIMPLEX
MIDDLE: DUPLEX
RIGHT: QUADRUPLEX

MULTI-OUTLET RECEPTACLE:
LEFT: SIMPLEX
RIGHT: DUPLEX

OTHER RECEPTACLES:
LEFT: 240 VOLT
RIGHT: SPECIAL PURPOSE

HVAC AND FIRE ALARM

FIRE ALARM CONTROL PANEL

FIRE ALARM ANNUNCIATOR PANEL

FIRE ALARM PULL STATION

FIRE ALARM INDICATOR:
X DENOTES ALERT TYPE (TYP.):
A DENOTES AUDIBLE
V DENOTES VISIBLE (# DENOTES STROBE INTENSITY)

FIRE ALARM INDICATOR MOUNTED ABOVE A FIRE ALARM PULL STATION

DUCT DETECTOR

SMOKE DETECTOR:
X DENOTES TYPE:
Z DENOTES IONIZATION
P DENOTES PHOTOELECTRIC
T DENOTES THERMAL

HEAT DETECTOR

THERMOSTAT

AMBIENT TEMPERATURE TRANSMITTER

SWITCHES

WALL SWITCH:
X DENOTES TYPE:
NO SUBSCRIPT DENOTES SINGLE-POLE SWITCH
3 DENOTES 3-WAY SWITCH
4 DENOTES 4-WAY SWITCH
M DENOTES MANUAL MOTOR STARTER
# DENOTES CIRCUIT NUMBER
WPCR DENOTES WEATHERPROOF CORROSION RESISTANT

COMBINATION MOTOR STARTER

DISCONNECT SWITCH

LOCAL CONTROL STATION

ELEMENTARY CONTROL SCHEMATICS

3-POSITION SELECTOR SWITCH:
HOA DENOTES HAND/OFF/AUTO
LOR DENOTES LOCAL/OFF/REMOTE
FOR DENOTES FORWARD/OFF/REVERSE

PUSHBUTTON SWITCHES:
LEFT: N.O.
RIGHT: N.C.
TEXT DENOTES LEGEND PLATE

EMERGENCY STOP MUSHROOM HEAD PUSHBUTTON SWITCH (N.C.):
TEXT DENOTES LEGEND PLATE

PUSHBUTTON SWITCH N.C. WITH LOCK-OUT:
TEXT DENOTES LEGEND PLATE

SELECTOR SWITCH:
LEFT: STANDARD
RIGHT: SPRING-RETURN
TEXT DENOTES LEGEND PLATE

SOLID-STATE OVERLOAD RELAY

THERMAL OVERLOAD RELAY

NOTATION LEGEND:
NO/NC: NORMALLY OPEN/CLOSED
RO/RC: RISE-TO-OPEN/CLOSE
FO/FC: FALL-TO-OPEN/CLOSE
TO/TC: TIME-OPEN/CLOSE

CONTACTS:
TEXT DENOTES COIL ID

SWITCHES:
TEXT DENOTES TAG NUMBER

INDICATOR LIGHT:
LEFT: STANDARD/RIGHT: PUSH-TO-TEST
X DENOTES COLOR

RUN TIME METER

SOLENOID VALVE

MOTOR PROTECTION RELAY

CONTROL POWER TRANSFORMER

MECHANICAL INTERLOCK CONNECTION

MOTOR SPACE HEATER

COIL:
X DENOTES TYPE:
M DENOTES MOTOR STARTER
CR DENOTES CONTROL RELAY
TD DENOTES TIME DELAY RELAY
TR DENOTES TIMER RANGE
TS DENOTES TIMER SETPOINT
PR DENOTES INTERPOSING PILOT RELAY
LC DENOTES LIGHTING CONTACTOR
Y DENOTES REFERENCE LINE NUMBER

EQUIPMENT/DEVICE LOCATION SYMBOLS

LOCATED IN MCC

LOCATED IN STAND-ALONE MOTOR STARTER/CONTROLLER

LOCATED IN FIELD

LOCATED AT PANEL:
X DENOTES PANEL ID:
L DENOTES LOCAL CONTROL STATION

SINGLE-LINE DIAGRAMS

TRANSFORMER

PROTECTIVE RELAY:
NUMBER DENOTES IEEE DEVICE FUNCTION

MOTOR AND TYPICAL ADDITIONAL DEVICES:
TSH: TEMPERATURE SWITCH
MSH: MOTOR SPACE HEATER
CF: COOLING FAN
TE: TEMPERATURE ELEMENT
ME: MOISTURE DETECTOR

INSTRUMENT TAG:
X DENOTES INSTRUMENT TYPE
Y DENOTES INSTRUMENT NUMBER
SEE DRAWING I1 FOR INSTRUMENT ABBREVIATIONS

FUSE

FUSED DISCONNECT SWITCH

DISCONNECT SWITCH

FUSED DISCONNECT SWITCH

LOW-VOLTAGE POWER CIRCUIT BREAKER:
LEFT: FIXED-MOUNT
RIGHT: DRAWOUT
E.O. DENOTES ELECTRICALLY OPERATED
LSIG DENOTES INSTALLED TRIP FUNCTIONS:
L DENOTES LONG-TIME
S DENOTES SHORT-TIME
I DENOTES INSTANTANEOUS
G DENOTES GROUND FAULT
Z DENOTES ZONE-SELECTIVE INTERLOCKING
CTR DENOTES BREAKER-SPECIFIC CT AND RATIOS

MEDIUM-VOLTAGE DRAWOUT POWER CIRCUIT BREAKER:
E.O. DENOTES ELECTRICALLY OPERATED
BATT. DENOTES BATTERY BACKUP POWER

LOW-VOLTAGE MOLDED CASE CIRCUIT BREAKER
LEFT: THERMAL-MAGNETIC TRIP UNIT
RIGHT: ELECTRONIC TRIP UNIT

MOTOR CIRCUIT PROTECTOR

GROUND

CT:
NUMBERS DENOTE CT WINDING RATIO AND CT QUANTITY

GFCT:
NUMBERS DENOTE GFCT WINDING RATIO AND GFCT QUANTITY

PT:
NUMBERS DENOTE PT WINDING VOLTAGES AND PT QUANTITY

DRAW-OUT ELEMENT

LEFT: PANELBOARD
RIGHT: COMBINATION POWER UNIT
X DENOTES PANEL ID

LIGHTNING ARRESTOR

SINGLE-LINE DIAGRAMS, CONT'D.

LEFT: RESISTOR
RIGHT: LINE REACTOR:
#% DENOTES IMPEDANCE

CAPACITOR

SHUNT TRIP

SURGE PROTECTIVE DEVICE

KIRK-KEY INTERLOCK

LEFT: FVNR STARTER:
X DENOTES NEMA SIZE
DP DENOTES DEFINITE PURPOSE CONTACTOR
RIGHT: FVR STARTER

LEFT: VFD WITH LINE REACTOR
MIDDLE: VFD WITH HARMONIC FILTER
RIGHT: VFD WITH LINE REACTOR AND FVNR BYPASS
X DENOTES NEMA SIZE

LEFT: RVSS STARTER
RIGHT: RVSS STARTER WITH FVNR BYPASS
X DENOTES NEMA SIZE

VFD WITH RVSS BYPASS

RVAT STARTER:
X DENOTES NEMA SIZE
#% DENOTES TAP SETTING

SINGLE-LINE DIAGRAMS, CONT'D.

GENERATOR

CONTACTOR-STYLE ATS OR MTS

CONTACTOR-STYLE ATS OR MTS WITH OFF POSITION

CONTACTOR-STYLE ATS OR MTS, SERVICE-ENTRANCE RATED

MCCB-STYLE ATS OR MTS

DRAWOUT CB-STYLE ATS OR MTS

MISC PLAN VIEW SYMBOLS

EQUIPMENT CONNECTION

GROUND RODS:
LEFT: BURIED
RIGHT: IN TESTWELL

DUCTBANK SECTION CUT IDENTIFIER:
DBXX DENOTES DUCTBANK ID
EXX DENOTES DRAWING NUMBER WHERE SECTION CUT IS LOCATED

DUCTBANK TAG:
X DENOTES DUCTBANK ID

CABLE TRAY TAG:
X DENOTES CABLE TRAY ID
Y DENOTES SCHEDULE REFERENCE

INSTRUMENT TAG:
X DENOTES INSTRUMENT TYPE
# DENOTES INSTRUMENT NUMBER
SEE DRAWING I1 FOR INSTRUMENT ABBREVIATIONS

CONDUIT TAGS:
P DENOTES POWER
C DENOTES CONTROL
I DENOTES INSTRUMENTATION
XXXX DENOTES CONDUIT ID
XXX-XXX DENOTES CONDUIT ID

COMMUNICATIONS

TELEPHONE OR NETWORK DROP

PAGER RECEPTACLE

HORN/LIGHT DEVICE

PA UNIT

WIRING

CONDUIT HOME RUN

CONDUIT EXPOSED

CONCRETE ENCASED CONDUIT

CONDUIT CONCEALED

FLEXIBLE CONDUIT

CONCRETE ENCASED DUCTBANK

LEFT: CONDUIT RISE (TURN UP)
RIGHT: CONDUIT DROP (TURN DOWN)

REV	ISSUED FOR	DATE	BY
1	CONSTRUCTION SET	1/19	JKP

PROJECT ENGINEER:	J. PETERY
DESIGNED BY:	D. WEBER
DRAWN BY:	J. JORDAN
CHECKED BY:	E. FRANCOIS

IF THIS BAR DOES NOT MEASURE 1" THEN DRAWING IS NOT TO FULL SCALE (0 1/2" 1")

CONSTRUCTION SET

COMMONWEALTH OF VIRGINIA — EVERSLEY A. FRANCOIS — Lic. No. 57152 — 1/14/2019 — PROFESSIONAL ENGINEER

Hazen

HAZEN AND SAWYER
1555 ROSENEATH ROAD
RICHMOND, VIRGINIA 23230
PHONE: 804-266-1400

CITY OF WINCHESTER
DEPARTMENT OF PUBLIC SERVICES
WINCHESTER, VIRGINIA

STROTHERS LANE GROUND STORAGE TANK REPLACEMENT

ELECTRICAL

LEGEND

DATE:	JANUARY 2019
HAZEN NO.:	31294-011
CONTRACT NO.:	201901
DRAWING NUMBER:	E1

File: O:\31294-RIC\03\31294-011\CAD_BIM\ELECTRICAL\E01 Saved by ADARNELL Save date: 1/14/2019 10:41 AM
PLOT DATE: 1/16/2019 11:21 AM BY: ADARNELL

ABBREVIATIONS

AE	ANALYSIS ELEMENT
AHU	AIR HANDLING UNIT
AIC	AMPERE INTERRUPTING CAPACITY
AIT	ANALYSIS INDICATING TRANSMITTER
ANSI	AMERICAN NATIONAL STANDARDS INSTITUTE
ASCE	AMERICAN SOCIETY OF CIVIL ENGINEERS
ASME	AMERICAN SOCIETY OF MECHANICAL ENGINEERS
AF	AMPERE FRAME
AT	AMPERE TRIP
ATS	AUTOMATIC TRANSFER SWITCH
BC	BYPASS CONTACTOR
BKR	BREAKER
(L/V)CP	(LOCAL/VENDOR) CONTROL PANEL
CPT	CONTROL POWER TRANSFORMER
CT	CURRENT TRANSFORMER
DB	DUCTBANK
DSW	DISCONNECT SWITCH
EHH	ELECTRIC HAND HOLE
EMH	ELECTRIC MANHOLE
EO	ELECTRICALLY OPERATED
ETM	ELAPSED TIME METER
ETU	ELECTRONIC TRIP UNIT
FAAP	FIRE ALARM ANNUNCIATOR PANEL
FACP	FIRE ALARM CONTROL PANEL
FS	FLOW SWITCH
FSL	FLOW SWITCH LOW
FVNR	FULL VOLTAGE NON-REVERSING
FVR	FULL VOLTAGE REVERSING
GFCI	GROUND FAULT CIRCUIT INTERRUPTER
GFCT	GROUND FAULT CURRENT TRANSFORMER
GNG	GO-NO GO
GND	GROUND
HOA	HAND-OFF-AUTO
HPU	HYDRAULIC POWER UNIT
IC	INPUT CONTACTOR
IEEE	INSTITUTE OF ELECTRICAL AND ELECTRONICS ENGINEERS
ISO	INTERNATIONAL ORGANIZATION FOR STANDARDIZATION
JB	JUNCTION BOX
LCS	LOCAL CONTROL STATION
LP	LIGHTING PANEL
LS	LEVEL SWITCH
LSL	LEVEL SWITCH LOW
LSLL	LEVEL SWITCH LOW-LOW
LSH	LEVEL SWITCH HIGH
LSHH	LEVEL SWITCH HIGH-HIGH
LT	LEVEL TRANSMITTER
MFR	MULTI-FUNCTION RELAY
MH	MANHOLE
MOD	MOTOR OPERATED DAMPER
MOG	MOTOR OPERATED GATE
MOL	MOTOR OPERATED LOUVER
MOV	MOTOR OPERATED VALVE
MPR	MOTOR PROTECTION RELAY
MTD	MOUNTED
MTS	MANUAL TRANSFER SWITCH
MWTS	MOTOR WINDING TEMPERATURE SWITCH
NC	NORMALLY CLOSED
NEC	NATIONAL ELECTRICAL CODE
NEMA	NATIONAL ELECTRICAL MANUFACTURERS ASSN
NFPA	NATIONAL FIRE PROTECTION ASSOCIATION
NO	NORMALLY OPEN
NTS	NOT TO SCALE
OC	OUTPUT CONTACTOR
OL	OVERLOAD

ABBREVIATIONS, CONT.

PB	PULLBOX
PC	PHOTOCELL
PCC	POINT OF COMMON COUPLING
PE	PRESSURE ELEMENT
PIT	PRESSURE INDICATING TRANSMITTER
PLC	PROGRAMMABLE LOGIC CONTROLLER
PP	POWER PANEL
PST	PHASE SHIFTING TRANSFORMER
PT	POTENTIAL TRANSFORMER
PTT	PUSH TO TEST
RCS	REMOTE CONTROL STATION
RECP	RECEPTACLE
RIO	REMOTE I/O
RM	ROOM
RTD	RESISTANCE THERMAL DEVICE
RTU	REMOTE TERMINAL UNIT
RVAT	REDUCED VOLTAGE AUTO TRANSFORMER
RVSS	REDUCED VOLTAGE SOLID STATE
SA	SUPPLY AIR
S.E.	SERVICE ENTRANCE
SP. C.	SPARE CONDUIT
SPD	SURGE PROTECTIVE DEVICE
SST	STAINLESS STEEL
TB	TEST BLOCK
TC	TIMED CLOSE
TO	TIMED OPEN
TSH	TWISTED SHIELDED
TX	TRANSFORMER
TYP	TYPICAL
UPS	UNINTERRUPTIBLE POWER SUPPLY
VFD	VARIABLE FREQUENCY DRIVE
WPCR	WEATHER PROOF CORROSION RESISTANT
WT	WALK THROUGH
XFMR	TRANSFORMER

NOTES:

1. UNLESS SPECIFICALLY NOTED OTHERWISE, ALL UNDERGROUND CONCRETE ENCASED ELECTRICAL CONDUITS SHALL BE PER STANDARD DETAIL 1611801.
2. THE INSTALLATION OF ALL CONCRETE ENCASED ELECTRICAL CONDUITS SHALL COMPLY WITH ACI 318, SECTION 6.3. CONTRACTOR SHALL SUPPLY EXPANSION JOINT FITTINGS AS REQUIRED FOR THERMAL EXPANSION AND DEFLECTION.
3. BOND ALL NEW CONCRETE ENCASED GROUND CONDUCTORS TO EXISTING GROUND CONDUCTORS IN ALL MANHOLES, PULL BOXES, CABLE TRAYS, AND SIMILAR LOCATIONS WHERE APPLICABLE.
4. UNLESS OTHERWISE SPECIFIED OR NOTED, ALL WALL MOUNTED ELECTRICAL PANELS, ENCLOSURES, AND SIMILAR EQUIPMENT SHALL BE MOUNTED 6'-6" (MAX) FROM THE TOP OF THE PANEL TO FINISHED FLOOR OR GRADE.
5. UNLESS OTHERWISE NOTED, ALL LIGHTING SWITCHES, CONTROL SWITCHES, AND SIMILAR EQUIPMENT SHALL BE MOUNTED WITH THEIR CENTERLINE APPROXIMATELY 4'-0" ABOVE FINISHED FLOOR, SLAB, OR GRADE.
6. A SEPARATE EQUIPMENT GROUNDING CONDUCTOR SHALL BE PROVIDED FOR EACH CIRCUIT (SEPARATE CONDUCTOR IN THE CONDUIT). THE CONDUCTOR SHALL BE TERMINATED AT THE PROPER DEVICE, TERMINAL, OR LUG AT THE POWER SOURCE (MCC GROUND BUS, PANELBOARD GROUND BUS, ETC.). GROUND CONDUCTOR SIZE SHALL BE PER THE LATEST EDITION OF THE NEC.
7. UNLESS SPECIFICALLY NOTED OTHERWISE, EXISTING PAVEMENT SHALL BE SAW CUT AND REMOVED TO ALLOW FOR THE INSTALLATION OF NEW ELECTRICAL DUCTBANKS. AFTER INSTALLATION, REPLACE PAVEMENT WITH NEW TO MATCH ORIGINAL CONDITIONS.
8. LIGHTNING PROTECTION SYSTEMS SHALL BE PROVIDED FOR THE STRUCTURES INDICATED ON THE DRAWINGS AND IN ACCORDANCE WITH SECTION 16670.
9. REFERENCE SECTION 01520 FOR CONSTRUCTION SEQUENCING REQUIREMENTS.
10. CONDUIT HOMERUNS ARE NOT SHOWN ON THE DRAWINGS. CONTRACTOR SHALL REFER TO CONDUIT AND WIRE SCHEDULES, RISER DIAGRAMS, SINGLE LINE DIAGRAMS, AND OTHER DRAWINGS FOR CONDUIT AND WIRE REQUIREMENTS.
11. MOUNT NEW SERVICE DISCONNECT ON UTILITY POLE BENEATH EXISTING UTILITY METER.

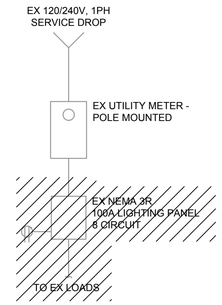

EXISTING TANK SERVICE ENTRANCE
NO SCALE

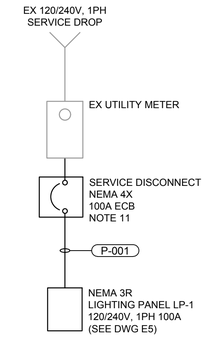

NEW TANK ONE-LINE DIAGRAM
NO SCALE

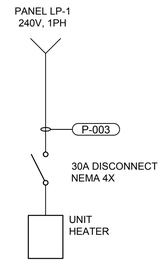

UNIT HEATER ONE-LINE DIAGRAM
NO SCALE

TYPICAL FOR UNIT HEATERS
EUH-1 AND EUH-2

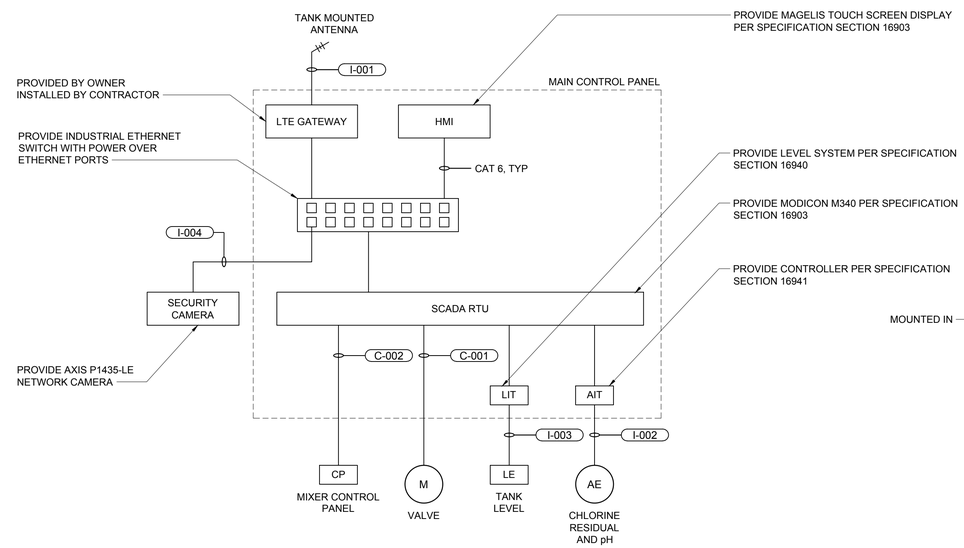

CONTROL ONE-LINE DIAGRAM
NO SCALE

MIXER POWER ONE-LINE DIAGRAM
NO SCALE

REV	ISSUED FOR	DATE	BY
1	CONSTRUCTION SET	1/19	JKP

PROJECT ENGINEER:	J. PETERY
DESIGNED BY:	D. WEBER
DRAWN BY:	J. JORDAN
CHECKED BY:	E. FRANCOIS

IF THIS BAR DOES NOT MEASURE 1" THEN DRAWING IS NOT TO FULL SCALE (0 1/2" 1")

CONSTRUCTION SET

COMMONWEALTH OF VIRGINIA
EVERSLEY A. FRANCOIS
Lic. No. 57149
1/14/2019
PROFESSIONAL ENGINEER

Hazen

HAZEN AND SAWYER
1555 ROSENEATH ROAD
RICHMOND, VIRGINIA 23230
PHONE: 804-266-1400

CITY OF WINCHESTER
DEPARTMENT OF PUBLIC SERVICES
WINCHESTER, VIRGINIA

STROTHERS LANE GROUND
STORAGE TANK REPLACEMENT

ELECTRICAL

ONE-LINE DIAGRAMS AND NOTES

DATE:	JANUARY 2019
HAZEN NO.:	31294-011
CONTRACT NO.:	201901
DRAWING NUMBER:	E2

File: O:\31294-RIC\31294-011\CAD_BIM\ELECTRICAL\E02 Saved by ADARNELL Save date: 1/16/2019 12:34 PM
PLOT DATE: 1/16/2019 12:35 PM BY: ADARNELL

NOTES:

1. STRUCTURE SHALL BE LIGHTNING PROTECTED PER SPECIFICATION SECTION 16670.
2. COORDINATE WITH TANK MANUFACTURER FOR MOUNTING OF WALL MOUNT ANTENNA MAST SUPPORT BRACKET, COMM SCOPE MT-2502 OR EQUAL.
3. DEMOLISH EXISTING CIRCUIT PANEL AS SHOWN ON DRAWING E2.
4. REPLACE EXISTING SECURITY CAMERA.
5. SWITCH CONTROLLER. MOUNT SWITCH ADJACENT TO ACCESS LADDER AT GROUND LEVEL.

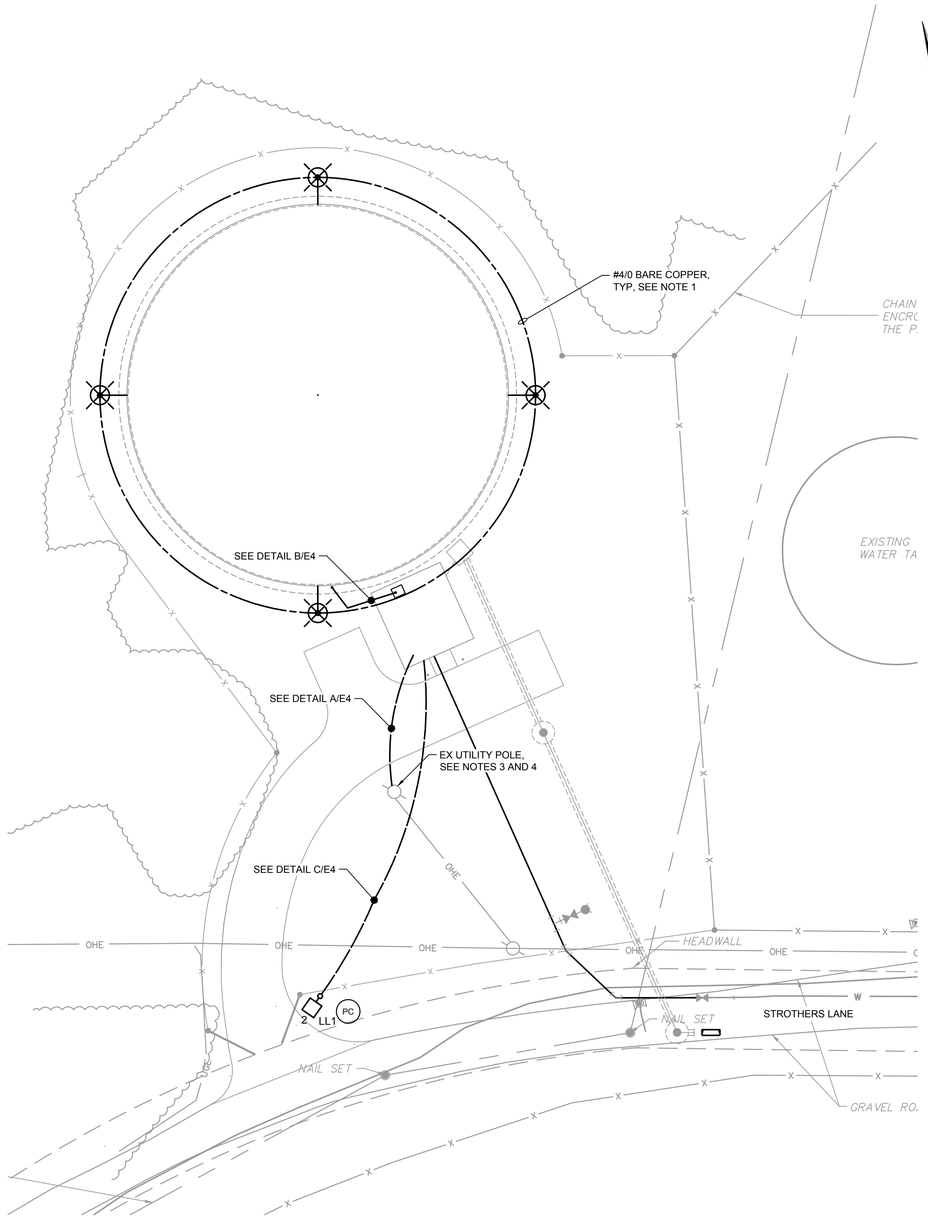

SITE PLAN
1" = 20'

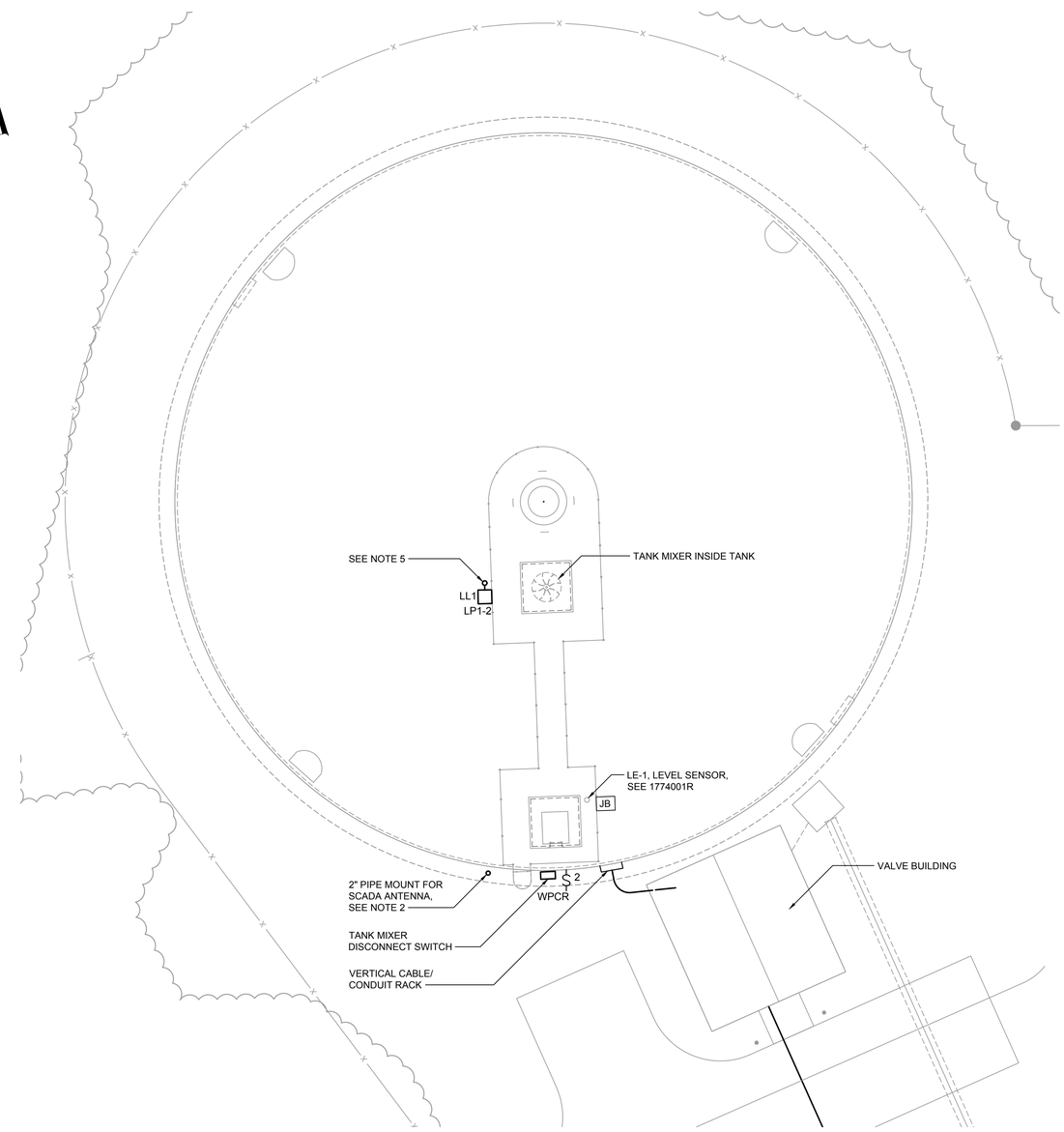

ENLARGED SITE PLAN
1" = 10'

REV	ISSUED FOR	DATE	BY
1	CONSTRUCTION SET	1/19	JKP

PROJECT ENGINEER:	J. PETERY
DESIGNED BY:	D. WEBER
DRAWN BY:	J. JORDAN
CHECKED BY:	E. FRANCOIS
IF THIS BAR DOES NOT MEASURE 1" THEN DRAWING IS NOT TO FULL SCALE	0 1/2" 1"

CONSTRUCTION SET

COMMONWEALTH OF VIRGINIA
EVERSLEY A. FRANCOIS
Lic. No. 57143
1/14/2019
PROFESSIONAL ENGINEER

Hazen

HAZEN AND SAWYER
1555 ROSENEATH ROAD
RICHMOND, VIRGINIA 23230
PHONE: 804-266-1400

CITY OF WINCHESTER
DEPARTMENT OF PUBLIC SERVICES
WINCHESTER, VIRGINIA

STROTHERS LANE GROUND STORAGE TANK REPLACEMENT

ELECTRICAL

SITE PLAN

DATE:	JANUARY 2019
HAZEN NO.:	31294-011
CONTRACT NO.:	201901
DRAWING NUMBER:	E3

File: O:\31294\RC\31294-011\CAD_BIM\ELECTRICAL\E3 Saved by ADARNELL Save date: 1/14/2019 10:44 AM
PLOT DATE: 1/16/2019 11:22 AM BY: ADARNELL

NOTES:

1. ALL OUTDOOR LIGHT FIXTURES SHALL BE EQUIPPED WITH INTEGRAL PHOTOCELLS.
2. CONDUITS TO BE ENCASED IN FLOOR SLAB WHERE POSSIBLE.
3. SEE DWG E5 FOR LIGHTING FIXTURE SCHEDULE.
4. ALL EXTERIOR LIGHTS SHALL BE CONTROLLED BY LIGHTING CONTACTOR LC-1.

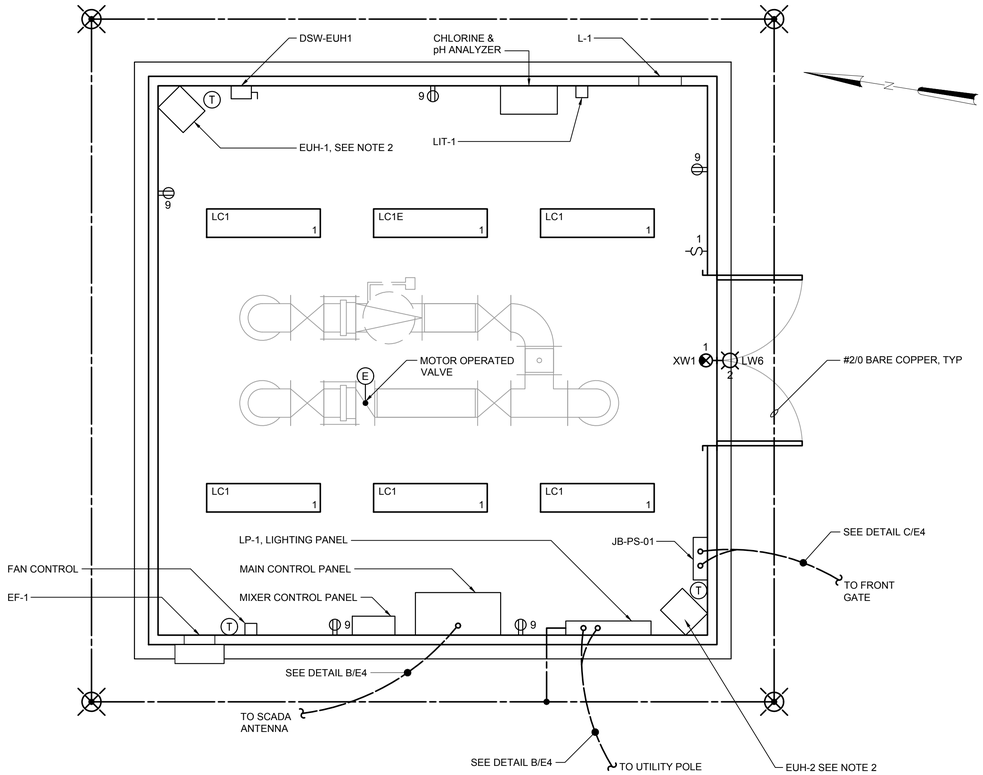

BOTTOM PLAN
3/8" = 1'-0"

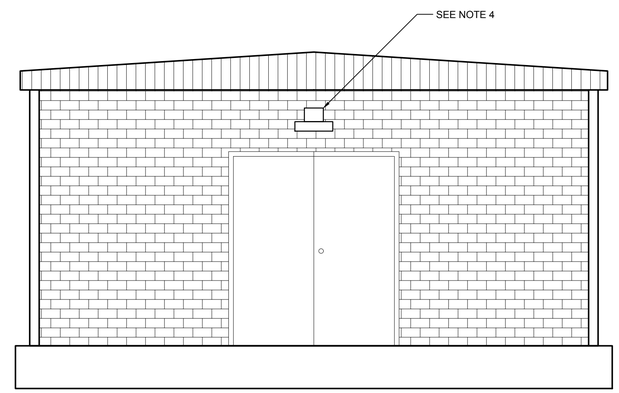

SOUTH
3/8" = 1'-0"

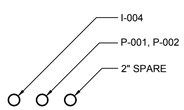

DETAIL A / E3
NTS

DETAIL B / E3
NTS

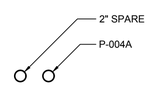

DETAIL C / E3
NTS

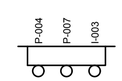

CONDUIT RACK

DETAIL D / E4
NTS

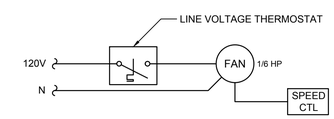

FAN CONTROL SCHEMATIC
NO SCALE

REV	ISSUED FOR	DATE	BY
1	CONSTRUCTION SET	1/19	JKP

PROJECT ENGINEER: J. PETERY
DESIGNED BY: D. WEBER
DRAWN BY: J. JORDAN
CHECKED BY: E. FRANCOIS
IF THIS BAR DOES NOT MEASURE 1" THEN DRAWING IS NOT TO FULL SCALE (0 1/2" 1")

CONSTRUCTION SET

COMMONWEALTH OF VIRGINIA — EVERSLEY A. FRANCOIS — Lic. No. 57149 — 1/14/2019 — PROFESSIONAL ENGINEER

Hazen
HAZEN AND SAWYER
1555 ROSENEATH ROAD
RICHMOND, VIRGINIA 23230
PHONE: 804-266-1400

CITY OF WINCHESTER
DEPARTMENT OF PUBLIC SERVICES
WINCHESTER, VIRGINIA

STROTHERS LANE GROUND STORAGE TANK REPLACEMENT

VALVE BUILDING
ELECTRICAL
PLAN, ELEVATION, AND DETAILS

DATE: JANUARY 2019
HAZEN NO.: 31294-011
CONTRACT NO.: 201901
DRAWING NUMBER: E4

File: O:\31294-R\C31294-011\CAD_BIM\ELECTRICAL\E04 Saved by ADARNELL Save date: 1/14/2019 10:45 AM
PLOT DATE: 1/16/2019 11:22 AM BY: ADARNELL

240/120 VOLTS
1 PHASE, 3 WIRE

PANEL LP-1
MAIN RBEAKER
100 A 2P

TYPE: NEMA 3R
MOUNT: SURFACE

MODS	DESCRIPTION	WIRE	TRIP	POLE	CKT No.	VOLT-AMPERES A	VOLT-AMPERES B	VOLT-AMPERES A	VOLT-AMPERES B	CKT No.	POLE	TRIP	WIRE	DESCRIPTION	MODS
-	LIGHTING	NOTE 1.	20	1	1	370		150		2	1	20	P-004	EXT. LIGHTING (TANK TOP)	-
-	SECURITY CAMERA	P-002	20	1	3		200		300	4	2	20	P-005	PAX MIXER (.5 HP)	-
-	FAN EF-1 (1/6 HP)	NOTE 1.	20	1	5	200		300		6					-
-	INSTRUMENTATION	NOTE 2.	20	1	7		500		1,000	8	2	20	P-006	MOTOR OPERATED VALVE	LFD
-	RECEPTACLES	NOTE 1.	20	1	9	900		1,000		10					
-	ELECTRIC UNIT HEATER EUH-1	P-003	30	2	11		2,500		320	12	1	20	NOTE 1.	OUTDOOR RECEPTACLES	GFCI
-					13	2,500		150		14	1	20	P-004A	EXT. LIGHTING (AT GRADE)	-
-	ELECTRIC UNIT HEATER EUH-2	P-003A	30	2	15		2,500		-	16	1	20		SPARE	-
-					17	2,500		-		18	1	20		SPARE	-
-	SPARE		20	1	19		-		-	20	1	20		SPARE	-
-	SPARE		20	1	21	-		-		22	1	20		SPARE	-
-	SPARE		20	1	23		-		-	24	1	20		SPARE	-
-	SPARE		20	1	25	-		-		26	1	20		SPARE	-
-	SPARE		20	1	27		-		-	28	1	20		SPARE	-
-	SPARE		20	1	29	-		-		30	1	20		SPARE	-

TOTAL	6,470	5,700	1,600	1,620	TOTAL
	PHASE TOTAL		TOTAL LOAD (VA)		
	8,070	7,320	15,390		
			TOTAL LOAD (A)		
			64.125		

MODIFICATION (MODS) LEGEND:
GFCI - GROUND FAULT CIRCUIT INTERRUPTER
LOD - LOCK-ON DEVICE
LFD - LOCK-OFF DEVICE

NOTES:
10 KAIC
100kA SPD

TAG NUMBER	SERVICE DESCRIPTION	STATE/SPAN	TYPE	SOURCE
LI-100	TANK LEVEL	0 - 30 FT.	AI	LEVEL CONTROL PANEL
ZLO-105	TANK VALVE - OPEN	OPEN	DI	LEVEL CONTROL PANEL
ZLC-105	TANK VALVE - CLOSED	CLOSED	DI	LEVEL CONTROL PANEL
XA-105	TANK VALVE - FAULTED	FAIL	DI	LEVEL CONTROL PANEL
YL-110	MIXER - RUNNING	RUNNING	DI	MIXER CP
XA-110	MIXER - FAILED	FAIL	DI	MIXER CP
ZCO-105	TANK VALVE - OPEN CMD	OPEN	DO	LEVEL CONTROL PANEL
ZCC-105	TANK VALVE - CLOSED CMD	CLOSED	DO	LEVEL CONTROL PANEL
XA-190	RTU - POWER LOSS	FAIL	DI	RTU PANEL
XA-191	RTU - UPS FAIL	FAIL	DI	RTU PANEL

NOTES:

1. LIGHTING PANEL BRANCH CIRCUITS SHALL BE 2#12 WITH 1#12 GND IN A 3/4" CONDUIT UNLESS OTHERWISE NOTED.
2. INSTRUMENT POWER CIRCUIT SHALL BE 2#12, 1#12 GND IN A 3/4" CONDUIT. INSTRUMENTS INCLUDE LEVEL TRANSMITTER CHLORINE, PH ANALYZER, AND THE MAIN CONTROL PANEL.
3. INSTRUMENTATION CIRCUIT POWERS LEVEL CONTROL PANEL, SCADA PANEL, AND LIT-1.
4. SCADA PANEL PROVIDED BY OWNER AND INSTALLED BY CONTRACTOR.

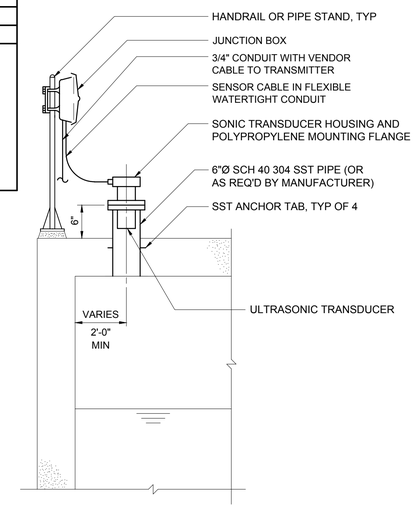

ULTRASONIC LEVEL TRANSDUCER DETAIL

1774001R

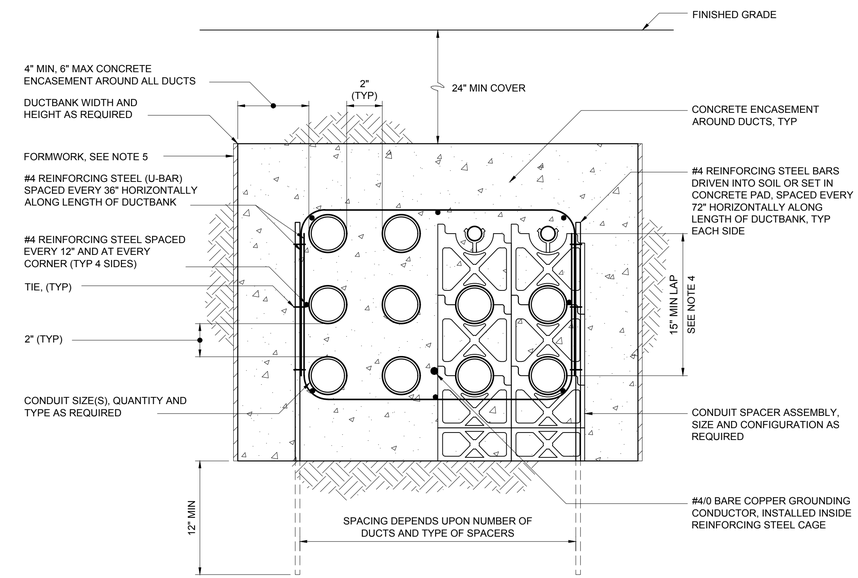

FIXTURE TYPE	LAMP/ FIXTURE WATTAGE	DESCRIPTION	MFR AND MODEL
LC1	61 W (MAX)	CEILING-MOUNTED, 120 V, LED LIGHT FIXTURE, COLOR TEMPERATURE OF 4100K, LINEAL RIBBED FROSTED ACRYLIC LENS, GENERAL]DISTRIBUTION, GASKETED FIBERGLASS HOUSING, STAINLESS STEEL LATCHES, 4FT, 6000 LUMEN MINIMUM, AND DAMP LOCATION LISTED.	HOLOPHANE EMS LED SERIES, COOPER VAPORTITE LED SERIES, OR LITHONIA FEM LED SERIES.
LC1E	61 W (MAX)	CEILING-MOUNTED, 120 V, LED LIGHT FIXTURE, COLOR TEMPERATURE OF 4100K, LINEAL RIBBED FROSTED ACRYLIC LENS, GENERAL]DISTRIBUTION, GASKETED FIBERGLASS HOUSING, STAINLESS STEEL LATCHES, 4FT, 6000 LUMEN MINIMUM, AND DAMP LOCATION LISTED. PROVIDE FIXTURE WITH EMERGENCY BATTERY PACK. WIRE FOR CONTINUOUS ILLUMINATION.	HOLOPHANE EMS LED SERIES, COOPER VAPORTITE LED SERIES, OR LITHONIA FEM LED SERIES.
LW6	10 (MAX)	WALL-MOUNTED, 120-277 VAC, LED LIGHT FIXTURE, COLOR TEMPERATURE OF 4000K, DARK BRONZE ALUMINUM HOUSING, 800 LUMEN MINIMUM, AND WET LOCATION LISTED. PROVIDE WITH MATCHING MOUNTING BOX FOR CONDUIT CONNECTION.	LITHONIA LIL, OR EQUAL.
XW1	1.5W	WALL-MOUNTED, RED LED EXIT SIGN, 120-277VAC, BRUSHED ALUMINUM FACEPLATE, DIE CAST ALUMINUM HOUSING, SINGLE/DOUBLE FACE AS INDICATED ON THE DRAWINGS, NICKEL CADMIUM BATTERY, BROWNOUT AND SURGE PROTECTED, DAMP LOCATION LISTED.	HOLOPHANE MAGELLAN MEX SERIES, LITHONIA LE SERIES, OR DUALLITE SEMPRA SERIES.
LL1	50	POLE-MOUNTED, 120-277 VAC, LED LIGHT FIXTURE, COLOR TEMPERATURE OF 4000 K, PRISMATIC BOROSILICATE GLASS LENS, IESNA TYPE 5 HIGH ANGLE DISTRIBUTION, CORROSION-RESISTANT GRAY CAST ALUMINUM HOUSING, 5000 LUMEN MINIMUM, , AND WET LOCATION LISTED. ROUND BRONZE, BASE MOUNTED, TAPERED, 14 FT. ANODIZED ALUMINUM POLE.	HOLOPHANE PETROLUX PLED2 SERIES, CROUSE-HINDS PMV SERIES, OR GE H2 SERIES.

CONDUIT NO.	SIZE	FROM	TO	CONDUCTORS	REMARKS
P-001	2"	MAIN SERVICE DISCONNECT AT SERVICE DROP	LIGHTING PANEL LP-1	3#2, 1#8GND	
P-002	3/4"	LIGHTING PANEL LP-1	SECURITY CAMERA AT UTILITY POLE	2#12, 1#12 GND	COMBINE WITH P-001 IN UNDERGROUND DUCT BANK
P-003	3/4"	LIGHTING PANEL LP-1	ELECTRIC UNIT HEATER EUH-1	3#10, 1#10 GND	VIA DISCONNECT SWITCH
P-003A	3/4"	LIGHTING PANEL LP-1	ELECTRIC UNIT HEATER EUH-2	3#10, 1#10 GND	VIA DISCONNECT SWITCH
P-004	3/4"	LIGHTING PANEL LP-1	POLE MOUNTED LIGHTS(TANK TOP)	3#10, 1#10 GND	USE 1 1/2" CONDUIT UNDERGROUND
P-004A	3/4"	LIGHTING PANEL LP-1	POLE MOUNTED LIGHTS(AT GRADE)	3#10, 1#10 GND	USE 1 1/2" CONDUIT UNDERGROUND
P-005	3/4"	LIGHTING PANEL LP-1	MIXER CONTROL PANEL	3#12, 1#12 GND	
P-006	3/4"	LIGHTING PANEL LP-1	TANK VALVE	3#12, 1#12 GND	
P-007	3/4"	MIXER CONTROL PANEL	TANK MIXER	3#6, 1#6 GND	VIA DISCONNECT SWITCH
P-008	3/4"	LIGHTING PANEL LP-1	ELECTRIC UNIT HEATER EUH-2	3#10, 1#10 GND	VIA DISCONNECT SWITCH
C-001	3/4"	MAIN CONTROL PANEL	TANK VALVE	12#14,1#14 GND	INCL. 2 SPARE
C-002	3/4"	MIXER CONTROL PANEL	MAIN CONTROL PANEL	8#14,1#14 GND	INCL. 2 SPARE
I-001	2"	MAIN CONTROL PANEL	SCADA ANTENNA	COAXIAL CABLE	
I-002	3/4"	MAIN CONTROL PANEL	CHLORINE/PH ANALYZER	VENDOR PROVIDED CABLE	

NOTES:

1. CONCRETE SHALL BE FURNISHED AND INSTALLED IN ACCORDANCE WITH SPECIFICATION SECTION 03300.
2. REINFORCING STEEL AND TIES SHALL BE FURNISHED AND INSTALLED IN ACCORDANCE WITH SPECIFICATION SECTION 03200. OVERLAP FOR REINFORCING STEEL SPLICES ALONG THE DUCTBANK LENGTH SHALL BE 15", MINIMUM.
3. CONDUIT SPACERS ARE REQUIRED IN ACCORDANCE WITH SPECIFICATION SECTION 16118. HORIZONTAL SPACING OF CONDUIT SPACER ASSEMBLIES ALONG LENGTH OF DUCTBANK SHALL AS SHOWN IN THE TABLE.
4. FOR DUCTBANKS LESS THAN 15" IN HEIGHT, THE LAP SHALL BE THE HEIGHT OF THE DUCTBANK.
5. IN POOR SOIL CONDITIONS, DUCTBANKS SHALL BE FORMED WITH FORMING MATERIALS TO MAINTAIN 4" MINIMUM ENCASEMENT. WHERE SOIL CONDITIONS PERMIT AND THE EXCAVATION IS MAINTAINED FOR A 4" MINIMUM TO 10" MAXIMUM ENCASEMENT, THE FORMWORK CAN BE OMITTED.

MAX SPACING BETWEEN CONDUIT SPACER ASSEMBLIES

CONDUIT SIZE	SPACING
1"	3 FT
1 1/4-2"	5 FT
2 1/2-3"	6 FT
3 1/2-5"	7 FT
6"	8 FT

TYPICAL DUCTBANK SECTION

1611801

REV	ISSUED FOR	DATE	BY
1	CONSTRUCTION SET	1/19	JKP

PROJECT ENGINEER: J. PETERY
DESIGNED BY: D. WEBER
DRAWN BY: J. JORDAN
CHECKED BY: E. FRANCOIS

IF THIS BAR DOES NOT MEASURE 1" THEN DRAWING IS NOT TO FULL SCALE (0 1/2" 1")

CONSTRUCTION SET

COMMONWEALTH OF VIRGINIA
EVERSLEY A. FRANCOIS
Lic. No. 57149
1/14/2019
PROFESSIONAL ENGINEER

Hazen
HAZEN AND SAWYER
1555 ROSENEATH ROAD
RICHMOND, VIRGINIA 23230
PHONE: 804-266-1400

CITY OF WINCHESTER
DEPARTMENT OF PUBLIC SERVICES
WINCHESTER, VIRGINIA

STROTHERS LANE GROUND STORAGE TANK REPLACEMENT

ELECTRICAL

DETAILS AND SCHEDULES

DATE: JANUARY 2019
HAZEN NO.: 31294-011
CONTRACT NO.: 201901
DRAWING NUMBER: E5

File: O:\31294\RIC\31294-011\CAD_BIM\ELECTRICAL\E05 Saved by ADARNELL Save date: 1/14/2019 11:01 AM
PLOT DATE: 1/16/2019 11:22 AM BY: ADARNELL