CITY OF WINCHESTER, VIRGINIA
CITY YARDS MAINTENANCE FACILITY:
RENOVATION and ADDITIONS
301 EAST CORK STREET
WINCHESTER, VIRGINIA 22601
DEVELOPMENT PLANS

CITY OF WINCHESTER, VIRGINIA
ROUSS CITY HALL
DEPARTMENT OF PUBLIC SERVICES
15 NORTH CAMERON STREET
WINCHESTER, VIRGINIA 22601
(540) 667-1815

STAFF:

MR. PERRY EISENACH, PUBLIC SERVICES DIRECTOR
Email: Perry Eisenach <Perry.Eisenach@winchesterva.gov>

MS. KELLY HENSHAW, P.E., CITY ENGINEER
Email: Kelly Henshaw <Kelly.Henshaw@winchesterva.gov>

MR. DREW BRADY, CAPITAL IMPROVEMENT/INFRASTRUCTURE MANAGER
Email: Drew Brady <Drew.Brady@winchesterva.gov>

MR. JUSTIN HALL, PUBLIC WORKS DIVISION MANAGER
Email: Justin Hall <Justin.Hall@winchesterva.gov>

MR. COREY MacKNIGHT, FACILITIES MANAGER
Email: Corey Macknight <Corey.Macknight@winchesterva.gov>

PROJECT CONSULTANTS:

ARCHITECT:

GROVE & DALL'OLIO ARCHITECTS, PLLC
18 WEST BOSCAWEN STREET
WINCHESTER, VIRGINIA 22601
Telephone: (540) 773-2328
Email: Lisa Dallolio <lisa@gdaaia.com>
Matthew Grove <matthew@gdaaia.com>

Contacts:
LISA DALL'OLIO
MATTHEW GROVE

CIVIL & STRUCTURAL ENGINEERS:

PAINTER-LEWIS, P.L.C.
817 CEDAR CREEK GRADE, Suite 120
WINCHESTER, VIRGINIA 22601
Telephone: (540) 662-5792
Email: Tim Painter <tgpainter@painterlewis.com>

Contacts:
TIMOTHY G. PAINTER, P.E.

Civil & Structural Engineering:
Tim Painter:
Email: Tim Painter <tgpainter@painterlewis.com>

Structural:
Jason Marshall:
Email: Jason Marshall <jason@painterlewis.com>
Brad Braithwaite:
Email: Brad Braithwaite <brad@painterlewis.com>
Levi Whittington:
Email: Levi Whittington <levi@painterlewis.com>

SURVEYORS:

PAINTER-LEWIS, P.L.C.
817 CEDAR CREEK GRADE, Suite 120
WINCHESTER, VIRGINIA 22601
Telephone: (540) 662-5792
Email: David Spriggs <dspriggs@painterlewis.com>

Contacts:
DAVID F. SPRIGGS, LS

MECHANICAL, ELECTRICAL, and PLUMBING ENGINEERS:

COMFORT DESIGNS, INC.
620 PENNSYLVANIA AVENUE
WINCHESTER, VIRGINIA 22601
Telephone: (540) 665-2846
Email: Roger Catlett <cdi2@comcast.net>

Contacts:
ROGER CATLETT, P.E.

Mechanical:
Roger Catlett:
Email: Roger Catlett <cdi2@comcast.net>

Electrical:
Mike Howell:
Email: Mike Howell <mhowellpe@comcast.net>

Plumbing:
Roger Catlett
Email: Roger Catlett <cdi2@comcast.net>

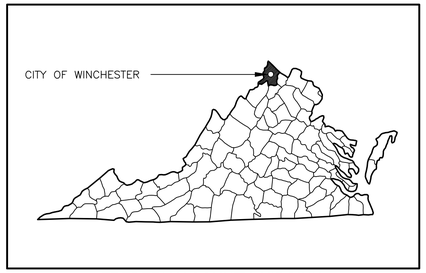

FREDERICK COUNTY, VIRGINIA

VICINITY MAP 1" = 600'

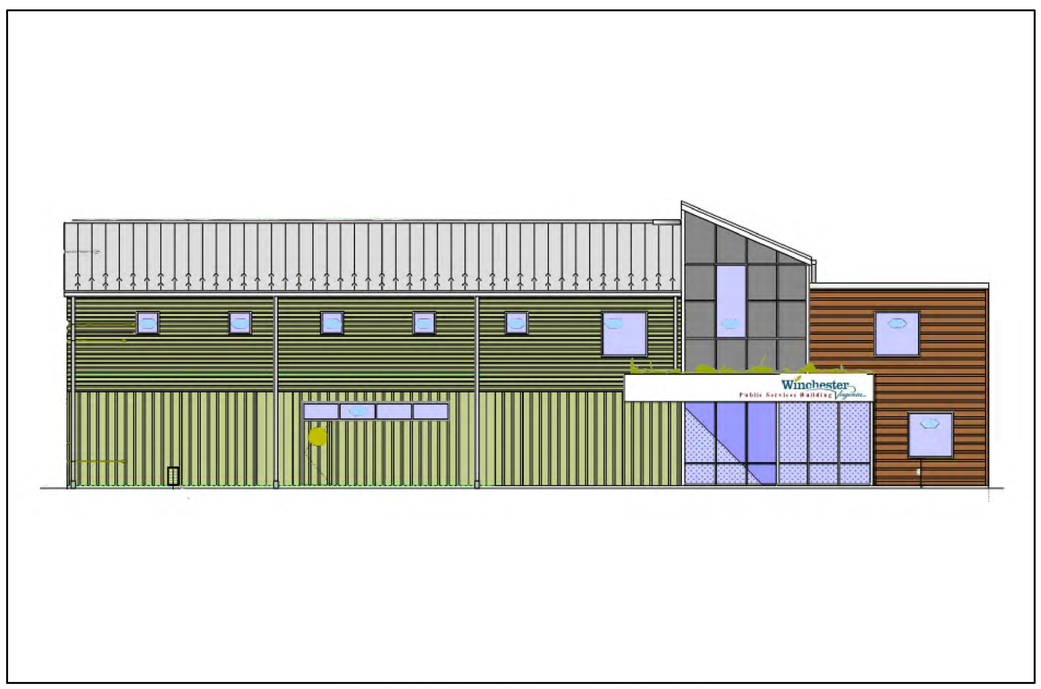

CITY OF WINCHESTER: PUBLIC SERVICES BUILDING

LIST OF DRAWINGS:

SITE PLAN:
SITE PLAN: SHTS 1/35-35/35 (35 SHEETS)

PEDESTRIAN BRIDGE PLAN:
PLANS & DETAILS: SHT PB1/PB1 (1 SHEET)

METAL STORAGE BUILDINGS #2,#3,#6,#7&#9:
STRUCTURAL: SHTS SB1-SB21 (28 SHEETS)
ARCHITECTURAL: SHTS A.1-A.4 (4 SHEETS)
MECHANICAL: SHTS M.1-M3.3 (9 SHEETS)
ELECTRICAL: SHTS E1.1-E3.1 (11 SHEETS)
PLUMBING: SHTS P1.1-P2.5 (7 SHEETS)

POLE BARNS #5,#5A,#8:
STRUCTURAL: SHTS PS1-PS12 (12 SHEETS)
ELECTRICAL: SHTS E1.4-E3.1 (5 SHEETS)

OFFICE BUILDING #1:
ARCHITECTURAL: SHTS A1.1-A7.2 (23 SHEETS)
STRUCTURAL: SHTS S1-S14 (14 SHEETS)
MECHANICAL: SHTS M1.1-M3.1 (10 SHEETS)
ELECTRICAL: SHTS E1.1-E4.1 (9 SHEETS)
PLUMBING: SHTS P1.1-P2.5 (7 SHEETS)

BUILDING DESCRIPTIONS:

BUILDING #1 (PHASE 1):
2-STORY OFFICE BUILDING WITH WALKOUT BASEMENT
VB CONSTRUCTION TYPE (WOOD FRAMED)
B - BUSINESS USE GROUP
NON-SPRINKLED
CONDITIONED SPACE

BUILDING #2 (PHASE 1):
1-STORY PRE-ENGINEERED METAL STORAGE BUILDING
IIB CONSTRUCTION TYPE (STEEL FRAMED)
S2 - STORAGE LOW HAZARD USE GROUP
SPRINKLED
CONDITIONED SPACE

BUILDING #3 (PHASE 1):
1-STORY PRE-ENGINEERED METAL STORAGE BUILDING
IIB CONSTRUCTION TYPE (STEEL FRAMED)
S2 - STORAGE LOW HAZARD USE GROUP
SPRINKLED
CONDITIONED SPACE

BUILDING #5&#5A (PHASE 1):
1-STORY POLE BARNS
VB CONSTRUCTION TYPE (WOOD FRAMED)
U - UTILITY AND MISCELLANEOUS USE GROUP
NON-SPRINKLED
NON-CONDITIONED SPACE

BUILDING #6 (PHASE1):
1-STORY PRE-ENGINEERED METAL STORAGE BUILDING
IIB CONSTRUCTION TYPE (STEEL FRAMED)
S2 - STORAGE LOW HAZARD USE GROUP
NON-SPRINKLED
CONDITIONED SPACE

BUILDING #7&#9 (PHASE 2):
1-STORY PRE-ENGINEERED METAL STORAGE BUILDING WITH WASH BAYS
IIB CONSTRUCTION TYPE (STEEL FRAMED)
S2 - STORAGE LOW HAZARD USE GROUP
SPRINKLED
CONDITIONED SPACE

BUILDING #8 (PHASE 2):
1-STORY POLE BARN
VB CONSTRUCTION TYPE (WOOD FRAMED)
U - UTILITY AND MISCELLANEOUS USE GROUP
NON-SPRINKLED
NON-CONDITIONED SPACE

CONSTRUCTION NOTES:

A. GENERAL:
1. ALL WORK SHALL BE DONE IN ACCORDANCE WITH THE VIRGINIA STATEWIDE UNIFORM BUILDING CODE, THE 2015 INTERNATIONAL BUILDING CODE AND THE STANDARDS AND SPECIFICATIONS OF THE CITY OF WINCHESTER, VIRGINIA.
2. IT SHALL BE THE RESPONSIBILITY OF THE CONTRACTOR TO NOTIFY "MISS UTILITY" BY TELEPHONE AT 811 AT LEAST TWO (2) WORKING DAYS BUT NOT MORE THAN TEN (10) WORKING DAYS PRIOR TO COMMENCEMENT OF ANY LAND DISTURBING ACTIVITIES.
3. THE CONTRACTOR SHALL BE LICENSED IN THE COMMONWEALTH OF VIRGINIA IN ACCORDANCE WITH CHAPTER 11 OF TITLE 54.1 OF THE CODE OF VIRGINIA. THE CONTRACTOR SHALL BE REQUIRED TO OBTAIN ALL NECESSARY PERMITS PRIOR TO CONSTRUCTION. IT SHALL ALSO BE THE RESPONSIBILITY OF THE CONTRACTOR TO MAINTAIN WORKMAN'S COMPENSATION INSURANCE AND CONTRACTORS GENERAL LIABILITY COVERAGE. A CERTIFICATE OF INSURANCE SHALL BE SUBMITTED TO THE OWNER.
4. ALL WORK SHALL BE PERFORMED IN AN EXPEDITIOUS AND WORKMANLIKE MANNER AND IN ACCORDANCE WITH ALL GENERALLY ACCEPTED TRADE PRACTICES. IT SHALL BE THE RESPONSIBILITY OF THE CONTRACTOR TO MAINTAIN A CLEAN AND ORDERLY SITE THROUGHOUT THE CONSTRUCTION PROCESS.
5. THESE STRUCTURAL DRAWINGS SHALL BE READ IN CONCERT WITH ALL OTHER CONTRACT DOCUMENTS AND SPECIFICATIONS.
6. EVERY EFFORT HAS BEEN MADE TO VERIFY THE DIMENSIONS AND ENSURE THE ACCURACY OF THESE PLANS. HOWEVER, THE CONTRACTOR SHALL VERIFY DIMENSIONS PRIOR TO THE CONSTRUCTION PROCESS AND IF ANY DISCREPANCIES DO EXIST, THEN THE PROJECT ARCHITECT AND/OR PROJECT ENGINEER SHALL BE NOTIFIED BEFORE THE NECESSARY ADJUSTMENTS ARE MADE.
7. DO NOT SCALE THE DRAWINGS. THE DIMENSIONS INDICATED ON THE PRINTS SHALL CONTROL.
8. THE TYPICAL DETAILS PROVIDED ON THESE DRAWINGS ARE TO DESCRIBE THE CONSTRUCTION STANDARDS TO BE APPLIED FOR THIS PROJECT. THE DETAILS MAY BE ADJUSTED, AS REQUIRED, TO ACCOUNT FOR VARYING CONDITIONS IN THE FIELD. SIGNIFICANT ADJUSTMENTS MUST BE PRESENTED TO THE PROJECT ENGINEER FOR REVIEW AND APPROVAL PRIOR TO ANY FABRICATION OR INSTALLATION. ALL TYPICAL DETAILS SHALL BE REVIEWED BY THE CONTRACTOR AND APPROPRIATE SUBCONTRACTORS PRIOR TO ANY DETAILING, FABRICATION, AND/OR INSTALLATION. ANY CONFLICTS OR CLARIFICATIONS SHALL BE RESOLVED BEFORE THE COMMENCEMENT OF WORK.
9. SHOP DRAWINGS OF ALL CONCRETE, STEEL, COLD-FORMED STEEL FRAMING, PRE-ENGINEERED STRUCTURAL COMPONENTS, ETC. SHALL BE SUBMITTED FOR REVIEW PRIOR TO ANY FABRICATION OR INSTALLATION.
10. COORDINATE SIZE AND INSTALLATION OF ALL OPENINGS, SLEEVES, INSERTS, TIES, EQUIPMENT PADS, EQUIPMENT SUPPORTS, ETC. WITH APPROPRIATE TRADES AND CONTRACT DRAWINGS PRIOR TO INSTALLATION OR FABRICATION.
11. THE CONTRACTOR IS RESPONSIBLE FOR THE IMPLEMENTATION OF ALL O.S.H.A. STANDARDS, SO THAT THE CONSTRUCTION SITE IS SECURE AND THAT THE SAFETY OF THE PUBLIC AND ALL PARTIES INVOLVED IN THE CONSTRUCTION PROCESS IS PRESERVED.
12. ADEQUATE TEMPORARY SUPPORT STRUCTURES, SUCH AS SHEETING, SHORING, AND BRACING, SHALL BE INSTALLED DURING CONSTRUCTION UNTIL THE WIND RESISTING SYSTEMS AND THE SUPPORTING DIAPHRAGMS ARE IN PLACE AND HAVE ATTAINED 75% DESIGN STRENGTH. SHORING AND BRACING SHALL RESIST FORCES SUCH AS WIND AND UNBALANCED LOADING DUE TO CONSTRUCTION. BRACING SYSTEMS SHALL BE DESIGNED BY A REGISTERED PROFESSIONAL ENGINEER LICENSED TO PRACTICE IN THE COMMONWEALTH OF VIRGINIA. IMPOSED CONSTRUCTION LOADS IN EXCESS OF THE STATED DESIGN LOADS MUST BE APPROVED BY THE STRUCTURAL ENGINEER PRIOR TO PLACING OF SUCH LOADS.
13. IF APPLICABLE, BOTH SIDES OF THE FOUNDATION WALL SYSTEM SHALL BE BACKFILLED SIMULTANEOUSLY SO AS TO PREVENT OVERTURNING OR LATERAL MOVEMENT OF THE WALLS. NO FOUNDATION WALLS SHALL BE BACKFILLED WITHOUT THE FLOOR DIAPHRAGM OR SUPPORTING SLAB AND ALL TEMPORARY SUPPORTS BEING CONSTRUCTED IN PLACE AND SECURE.

B. DESIGN CRITERIA:
1. CODES: (USE LATEST EDITIONS U.N.O.)
   a. 2015 INTERNATIONAL BUILDING CODE (2015).
   b. BUILDING CODE REQUIREMENTS FOR REINFORCED CONCRETE (ACI-318)
   c. AISC MANUAL OF STEEL CONSTRUCTION (AISC-14th EDITION).
   d. BUILDING CODE REQUIREMENTS FOR MASONRY STRUCTURES. (ACI 530-08/ASCE 5-08/TMS 402-08)

2. LIVE LOADS:	
ROOF LOAD	30.0 PSF (MINIMUM)
HEAVY STORAGE LOAD	250.0 PSF
LIGHT STORAGE LOAD	125.0 PSF
STAIR LOAD	100.0 PSF
DEAD LOADS:	
ACTUAL MATERIAL WEIGHTS	
FLAT ROOF DIAPHRAGM	10.0 PSF
MEZZANINE FLOOR LOADS	30.0 PSF
COLLATERAL LOADS	7.0 PSF
3. WIND LOAD:	
BASIC WIND SPEED	90 MPH (115 MPH ULTIMATE)
IMPORTANCE FACTORS	1.0
EXPOSURE	B
4. SNOW LOAD:	
MEAN GROUND SNOW LOAD	35.0 PSF*
FLAT ROOF SNOW LOAD	30.0 PSF (MIN.)
SNOW EXPOSURE FACTOR	0.7
SNOW IMPORTANCE FACTOR	1.0
*ADJUST FOR SNOW ACCUMULATION, IF APPLICABLE.	
5. EARTHQUAKE LOAD:	
MAPPED SHORT PERIOD SPECTRAL RESPONSE ACCELERATION (Ss)	0.131
MAPPED 1 SECOND PERIOD SPECTRAL RESPONSE ACCELERATION (S1)	0.055
SHORT PERIOD SPECTRAL RESPONSE ACCELERATION (SDS)	0.140
1 SECOND PERIOD SPECTRAL RESPONSE ACCELERATION (SD1)	0.087
SOIL SITE CLASS	D
SEISMIC HAZARD EXPOSURE GROUP	II
SEISMIC PERFORMANCE CATEGORY	B
SEISMIC RESPONSE COEFFICIENT (Cs)	0.040
RESPONSE MODIFICATION FACTOR	3.5
ORDINARY STEEL MOMENT RESISTING FRAME SYSTEMS	

6. FOUNDATION DESIGN WAS ESTABLISHED BASED UPON THE BEST AVAILABLE GEO-TECHNICAL INFORMATION OBTAINED ABOUT THE SITE AS DETERMINED IN THE PROJECT GEOTECHNICAL REPORT. A LIMITED SOILS REPORT WAS PREPARED BY TRIAD ENGINEERING, INC., ENTITLED REPORT OF GEOTECHNICAL EXPLORATION, CITY MAINTENANCE YARD, WINCHESTER, VIRGINIA, AND DATED DECEMBER 31, 2018.
7. TO VERIFY COMPLIANCE WITH THE DESIGN RECOMMENDATIONS OF THIS PROJECT, ALL FOOTING EXCAVATIONS SHALL BE INSPECTED BY A LICENSED GEO-TECHNICAL ENGINEER OR CERTIFIED INSPECTOR, PRIOR TO PLACEMENT OF THE CONCRETE. FOR THIS PROJECT A SOIL BEARING CAPACITY OF 2500 PSF WAS USED. IF THE SOIL BEARING CAPACITY IS FOUND TO BE LESS THAN THE ASSUMED DESIGN VALUE, THEN THE FOOTINGS MUST BE REDESIGNED ACCORDINGLY.
8. A MINIMUM FROST DEPTH OF 24" SHALL BE MAINTAINED FOR THIS PROJECT AS REQUIRED BY THE LOCAL BUILDING DEPARTMENT OF CITY OF WINCHESTER, VA.
9. IT IS ANTICIPATED THAT ROCK WILL BE ENCOUNTERED IN THE FOUNDATION EXCAVATIONS FOR BUILDINGS #2,#3,#6,#7&#9. FOOTINGS BEARING ON ROCK SHALL BE UNDERCUT BY A MINIMUM OF 12" AND BACKFILLED WITH VDOT 21-A OR 21-B CRUSHED STONE OR SAND, AS DIRECTED BY THE GEOTECHNICAL ENGINEER, PLACED IN 8" LIFTS AND COMPACTED TO 95% PROCTOR. EACH LIFT OF ALL COMPACTED FILL MATERIAL SHALL BE TESTED AND VERIFIED BY A LICENSED GEO-TECHNICAL ENGINEER.

C. CONCRETE:
1. CONCRETE USED FOR THIS PROJECT SHALL MEET OR EXCEED THE FOLLOWING COMPRESSIVE STRENGTH AT 28 DAYS:

FOUNDATION FOOTINGS & WALLS	3000 psi NORMAL WT.
SLAB-ON-GRADE (INTERIOR)	3000 psi NORMAL WT.
SLAB-ON-GRADE (EXTERIOR)	3500 psi NORMAL WT.
MASONRY GROUT	2000 psi NORMAL WT.
BOND BEAM GROUT	2000 psi NORMAL WT.

2. ALL CONCRETE SUBJECT TO FREEZE/THAW CYCLES SHALL BE AIR ENTRAINED.
3. AS DIRECTED BY THE GEO-TECHNICAL SPECIALIST, THE FOOTINGS MAY BE PLACED DIRECTLY AGAINST THE SOIL WITH ADEQUATE FORMING.
4. CONCRETE SLABS SHALL BE POURED IN A STRIP PATTERN. CONSTRUCTION JOINTS SHALL COINCIDE WITH THE CONTROL JOINTS (INDICATED AS C.J. ON THE PLANS). CONSTRUCTION JOINTS IN THE SLAB SHALL HAVE THE REINFORCING CONTINUE THROUGH THE JOINT U.N.O. IN THE DETAILS.
5. CONTROL JOINTS AND WATER-STOPS SHALL BE INSTALLED, AS NEEDED, IN ACCORDANCE WITH THE BUILDING CODE REQUIREMENTS, COMMON CONSTRUCTION PRACTICES AND THESE CONSTRUCTION DOCUMENTS.
6. ALL CONTROL JOINTS MAY BE SAW-CUT OR CONSTRUCTED WITH A METAL CONTROL JOINT FORM. CONTROL JOINTS SHALL BE SEALED WITH A SUITABLE JOINT SEALANT.
7. SAW-CUT OR TOOLED CONTROL JOINTS SHALL BE AS DETAILED. SAW-CUTS SHALL BE MADE AS SOON AS PRACTICAL WITHOUT DAMAGING THE FINISHED CONCRETE FLOOR SURFACE (WITHIN 12 HOURS, MAXIMUM OF CURING.)

C. CONCRETE (CONT.)
8. A DIAMOND PATTERN CONTROL JOINT SHALL BE PROVIDED AT ALL ISOLATED COLUMN LOCATIONS, AS INDICATED ON THESE PLANS. THE CORNERS OF THE DIAMOND SHALL COINCIDE WITH THE CONTROL JOINTS, AS SPECIFIED ON THESE PLANS AND BE FILLED WITH 1/2" PREFORMED JOINT FILLER.
9.EXPOSED CONCRETE EDGES SHALL BE BUILT SQUARE AND RUBBED TO A MINIMUM RADIUS CHAMFER, UNLESS SPECIFIC CHAMFERS ARE CALLED FOR IN DETAILS.
10. CONCRETE FORMWORK SHALL BE DESIGNED BY A REGISTERED PROFESSIONAL ENGINEER LICENSED TO PRACTICE IN THE COMMONWEALTH OF VIRGINIA.
11. ALL CONCRETE WALLS SHALL BE CONSTRUCTED TO THE NOMINAL DIMENSIONS AS INDICATED ON THE CONSTRUCTION PLANS. THE CONCRETE SHALL HAVE A MINIMUM COMPRESSIVE STRENGTH OF 3000 psi AT 28 DAYS, U.N.O., AND PLACED WITH A MAXIMUM SLUMP OF 4". ALL WORK SHALL CONFORM TO THE STANDARDS AND SPECIFICATIONS OF THE AMERICAN CONCRETE INSTITUTE.
12. ALL REINFORCING STEEL SHALL COMPLY WITH ASTM A615, GRADE 60 STEEL. MINIMUM COVER OVER THE STEEL SHALL BE 2" FOR ALL FOUNDATION WALL CONSTRUCTION. ALL REINFORCING STEEL FOR THE WALLS, HEADERS, GIRDERS, ETC. SHALL BE IN PLACE PRIOR TO THE POURING OF THE WALLS. THE REINFORCING STEEL SHALL BE PROPERLY TIED AND LOCATED IN ACCORDANCE WITH THE DESIGN PLANS.
13. INTER-LOCKING METAL FORMS SHALL BE USED FOR THE CONSTRUCTION OF THE CONCRETE WALL SYSTEM. ALL FORMS SHALL BE CLEAN, PLUM, SQUARE AND PROPERLY ALIGNED FOR CONCENTRIC LOADING ON THE WALL FOOTINGS. ALL DOOR AND WINDOW ELEMENTS SHALL BE BOXED-FRAMED INSIDE OF THE FORMWORK TO THE APPROPRIATE HORIZONTAL AND VERTICAL DIMENSIONS WITH PROPER ALLOWANCES MADE FOR THE FRAMEWORK OF THE DOOR AND WINDOW UNITS. THE FORM SYSTEM SHALL BE PROPERLY PREPPED SO AS TO PREVENT ADHESION OF THE CONCRETE TO THE FORMWORK DURING THE CURING PROCESS.
14. ALL THROUGH-WALL PENETRATIONS SHALL BE IN PLACE PRIOR TO THE POURING OPERATION AND PRECAUTIONS SHALL BE TAKEN TO PREVENT FUTURE LEAKAGE IN THE AREAS OF THESE PENETRATIONS (i.e. WATER-PROOF EXPANSIVE FILLER MATERIAL SHALL BE INJECTED INTO THE VOID AREAS OF THE PENETRATION).
15. SEE ARCHITECTURAL, BUILDING, MECHANICAL AND PLUMBING DRAWINGS FOR LOCATIONS OF OPENINGS AND SLEEVES. DO NOT CUT REINFORCEMENT.

D. REINFORCEMENT:
1. ALL REINFORCING STEEL SHALL BE DEFORMED BARS IN ACCORDANCE WITH ASTM A615 SPECIFICATIONS, GRADE 60.
2. WELDED WIRE FABRIC REINFORCING SHALL CONFORM TO ASTM A185. THE WELDED WIRE FABRIC SHALL HAVE A MINIMUM STEEL YIELD STRENGTH OF 65,000 psi. (Fy = 65,000 psi).
3. MAINTAIN MINIMUM CONCRETE COVERAGE FOR REINFORCING AS SPECIFIED IN ACI-318.

CONCRETE CAST AGAINST AND PERMANENTLY EXPOSED TO EARTH:	3"
CONCRETE EXPOSED TO EARTH OR WEATHER:	2" (N0. 6 THROUGH NUM. 8 BARS) 1-1/2" (N0. 5 BAR, W31 OR D31 WIRE OR SMALLER)
CONCRETE NOT EXPOSED TO WEATHER OR IN CONTACT w/ GROUND - SLABS, WALLS & JOISTS:	3/4" (N0. 11 BARS & SMALLER)

4. ALL CONTINUOUS REINFORCING IN FOOTINGS SHALL BE LAP-SPLICED 2'-0". ALL OTHER SPLICES SHALL BE CLASS B TENSION, 32" LAP (MIN.), U.N.O.
5. DETAILING, FABRICATION, AND INSTALLATION OF REINFORCING BARS SHALL COMPLY WITH THE LATEST EDITION OF THE "DESIGN HANDBOOK OF THE CRSI" AND THE MANUAL OF STANDARD PRACTICE OF THE ACI.
6. PROVIDE DOWELS TO MATCH REINFORCEMENT IN ALL WALLS, PIERS, COLUMNS, AND FOUNDATIONS.
7. ALL PEDESTALS OR HOLES IN THE CONCRETE SLAB SHALL HAVE, ADDITIONALLY, (2) #4 x (OPENING DIM. + 2 FT.) ALONG EACH SIDE OF OPENING AND (2) #3 x 2'-0" DIAGONALLY AT EACH PEDESTAL CORNER.

E. MASONRY:
1. ALL MASONRY CONSTRUCTION SHALL CONFORM TO THE LATEST EDITION OF THE STANDARDS AND SPECIFICATIONS OF THE MASONRY STANDARDS JOINT COMMITTEE.
2. CONCRETE MASONRY UNITS (CMU) SHALL HAVE A MINIMUM COMPRESSIVE STRENGTH OF 1500 psi @ 28 DAYS.
3. THE MINIMUM CMU PRISM STRENGTH SHALL BE 1900 psi. (F'm=1900 psi).
4. THE BLOCK MORTAR SHALL BE TYPE "M" MORTAR FOR ALL MASONRY MATERIALS BELOW GRADE AND ALL OTHER MORTAR SHALL BE TYPE "S" IN ACCORDANCE WITH ASTM C270.
5. THE CMU SHALL BE REINFORCED WITH STEEL REINFORCING BARS THAT COMPLY WITH ASTM A615 GRADE 60 STEEL. TYPICALLY, THE HORIZONTAL JOINT REINFORCEMENT OF THE CMU SHALL CONSIST OF TRUSS TYPE WELDED WIRE, 9 GAUGE, PLACED IN EVERY OTHER COURSE. MORTAR JOINTS SHALL BE UNIFORM $\frac{3}{8}$" THICK JOINTS AS REQUIRED FOR COURSING.
6. FULLY GROUT AND REINFORCE, AS SPECIFIED, ALL POINTS OF BEARING IN THE CMU WALLS. ALL GROUT SHALL HAVE A MINIMUM COMPRESSION STRENGTH OF 2000 psi AT 28 DAYS.
7. IF APPLICABLE, ALL MASONRY BOND BEAMS SHALL BE GROUTED SOLID WITH 2000 psi CONCRETE GROUT.
8. ALL MASONRY BELOW GRADE SHALL BE GROUTED SOLID AT POINTS OF BEARING AND WHERE REINFORCED.
9. SOLID MASONRY PIERS, IDENTIFIED AS SMP ON PLAN, SHALL BE GROUTED SOLID FULL HEIGHT OF WALL TO FOUNDATION.

F. STRUCTURAL STEEL:
1. ALL STRUCTURAL STEEL MATERIAL SHALL BE, AS DIRECTED, IN ACCORDANCE WITH ASTM SPECIFICATIONS. ALL STRUCTURAL STEEL SHALL BE SUPPLIED, FABRICATED, AND ERECTED IN ACCORDANCE WITH THE LATEST EDITION OF THE AMERICAN INSTITUTE OF STEEL CONSTRUCTION MANUAL, THIS DESIGN, AND PROJECT SPECIFICATIONS.
2. ALL STRUCTURAL STEEL SHALL BE ASTM, A992-50 GRADE 50 STEEL, U.N.O., & A36 FOR PLATES, M, S, C, MC AND L SHAPES.
3. FRAMING BOLTS SHALL CONFORM TO ASTM A325N, $\frac{5}{8}$" DIA. (MIN.), U.N.O.
4. ANCHOR BOLTS SHALL CONFORM TO ASTM A307 OR F1554 GRADE 36, U.N.O. SEE DETAILS FOR LOCATION,TYPE, & SIZE.
5. WELDING SHALL CONFORM TO AMERICAN WELDING SOCIETY DI.1-1, E-70xx ELECTRODES. FILLER METAL SHALL HAVE A MINIMUM YIELD STRENGTH OF 57 KSI.
6. PROVIDE $\frac{1}{2}$" SPACE BETWEEN ENDS OF CONTINUOUS ANGLES, SUPPORTING DECKING OR MASONRY.
7. THE CENTERLINES OF ALL COLUMNS AND BEAMS SHALL BE LOCATED ON THE CENTROID OF THE STRUCTURAL MEMBERS AND THE FOOTING ELEMENTS, UNLESS OTHERWISE SHOWN.
8. ALL CONNECTIONS SHALL BE STANDARD SHEAR CONNECTIONS, UNLESS NOTED OTHERWISE. WHERE CONNECTIONS OR REACTIONS ARE NOT SPECIFIED, THE FABRICATOR SHALL PROVIDE CONNECTIONS TO SUPPORT ONE-HALF OF THE ALLOWABLE UNIFORM LOAD AS SHOWN IN THE AISC MANUAL, 14th EDITION TABLES OF ALLOWABLE UNIFORM LOADS, PART 2 FOR THE GIVEN BEAM, SPAN AND GRADE OF STEEL SPECIFIED.
9. WHERE SLOTTED CONNECTION HOLES ARE USED, THE FABRICATOR SHALL ADJUST THE BOLT VALUES ACCORDINGLY.
10. THE FOLLOWING CONDITIONS SHALL BE CHECKED WHEN DESIGNING BEAM CONNECTIONS: BOLT SHEAR, BOLT BEARING ON CONNECTING MATERIAL, BLOCK WEB SHEAR ON THE NET AREA OF THE CONNECTING ANGLES OR PLATES AND LOCAL BENDING STRESSES.
11. UNLESS NOTED OTHERWISE, ALL ANCHOR BOLTS SHALL BE $\frac{3}{4}$" Ø, ALL EXPANSION BOLTS SHALL BE $\frac{1}{2}$" Ø AND ALL BOLTS FOR STEEL TO STEEL CONNECTIONS SHALL BE $\frac{3}{4}$" Ø.
12. THE MINIMUM NUMBER OF BOLTS PER CONNECTION SHALL BE AS FOLLOWS:
   W8 & W10 SECTIONS : 2 BOLTS
   W12 & W14 SECTIONS: 3 BOLTS

G. METAL STUDS
1. WORK SHALL MEET THE REQUIREMENTS OF THE FOLLOWING STANDARDS (USE LATEST EDITION, U.N.O.):
A. AMERICAN IRON AND STEEL INSTITUTE (A.I.S.I.) "DESIGN OF COLD FORMED STEEL STRUCTURAL MEMBERS,"
B. AMERICAN WELDING SOCIETY (A.W.S.) D.1.3, "STRUCTURAL WELDING CODE - SHEET STEEL."
C. AMERICAN SOCIETY FOR TESTING AND MATERIALS (A.S.T.M.)
2. ALL METAL FRAMING MEMBERS SHALL BE MANUFACTURED AND SUPPLIED BY DIETRICH INDUSTRIES OR APPROVED EQUAL AND BE OF THE TYPE AND SIZE AS SHOWN ON THE PLANS.
3. ALL GALVANIZED STUDS, JOISTS, TRACK, BRIDGING AND ACCESSORIES SHALL BE FROM STEEL HAVING A GALVANIZED COATING MEETING THE REQUIREMENTS OF A.S.T.M. A653.
4. THE PHYSICAL AND STRUCTURAL PROPERTIES LISTED BY DIETRICH INDUSTRIES SHALL BE CONSIDERED THE MINIMUM PERMITTED FOR ALL FRAMING MEMBERS. SPECIFICALLY, THE FOLLOWING PROPERTIES, CALCULATED IN ACCORDANCE WITH THE LATEST A.I.S.I. SPECIFICATION SHALL BE PROVIDED: Ix (in.^4), Sx ($in.^3$), AREA ($in.^2$), Rx (in.), Fy (KSI), RESISTING MOMENT (in.-lb.).
5. FRAMING COMPONENTS MAY BE PRE-ASSEMBLED INTO PANELS PRIOR TO ERECTING. PREFABRICATED PANELS SHALL BE SQUARE, WITH COMPONENTS ATTACHED IN A MANNER AS TO PREVENT RACKING.
6. FASTENING OF COMPONENTS SHALL BE WITH SELF TAPPING SCREWS OR WELDING OF SUFFICIENT SIZE TO ENSURE THE STRENGTH OF THE CONNECTION. SEE PLANS FOR SIZE, TYPE, & NUMBER.
7. ERECT FRAMING AND PANELS PLUMB,LEVEL AND SQUARE IN STRICT ACCORDANCE WITH THE APPROVED SHOP DRAWINGS.
8. HANDLING AND LIFTING OF PREFABRICATED PANELS SHALL BE DONE IN A MANNER AS TO NOT CAUSE DISTORTION IN ANY MEMBER.
9. TRACK SHALL BE SECURELY ANCHORED TO THE SUPPORTING STRUCTURE AS SHOWN ON THE ERECTION DRAWINGS. CONCRETE ANCHORS SHALL BE INSTALLED AFTER FULL COMPRESSIVE STRENGTH AS BEEN ACHIEVED.

G. METAL STUDS (CONT.)
10. ALL TRACK BUTT JOINTS, ABUTTING PIECES OF TRACK SHALL BE SECURELY ANCHORED TO A COMMON STRUCTURAL ELEMENT, OR THEY SHALL BE BUTT-WELDED OR SPLICED TOGETHER.
11. STUDS SHALL BE PLUMBED, ALIGNED AND SECURELY ATTACHED TO THE FLANGE OR WEBS OF BOTH UPPER AND LOWER TRACKS.
12. JACK STUDS OR CRIPPLES SHALL BE INSTALLED BELOW WINDOW SILLS, ABOVE WINDOW AND DOOR HEADS, AT FREE STANDING STAIR RAILS AND ELSEWHERE TO FURNISH SUPPORT AND SHALL BE SECURELY ATTACHED TO SUPPORTING MEMBERS.
13. WALL STUD BRIDGING SHALL BE ATTACHED IN A MANNER TO PREVENT STUD ROTATION. BRIDGING ROWS SHALL BE SPACED ACCORDING TO DIETRICH INDUSTRIES'S, OR AN APPROVED EQUAL'S, RECOMMENDATION.
14. FRAMED OPENINGS SHALL INCLUDE HEADERS AND SUPPORTING STUDS AS SHOWN ON THE PLANS.
15. TEMPORARY BRACING SHALL BE PROVIDED UNTIL ERECTION IS COMPLETE.
16. PROVIDE STUD WALLS AT LOCATIONS INDICATED ON PLANS AS "SHEAR WALLS" FOR FRAME STABILITY AND LATERAL LOAD RESISTANCE.
17. PROVISION FOR STRUCTURE VERTICAL MOVEMENT SHALL BE PROVIDED WHERE INDICATED ON THE PLANS USING VERTICAL SIDE CLIP OR OTHER MEANS IN ACCORDANCE WITH DIETRICH INDUSTRIES, OR AN APPROVED EQUAL'S RECOMMENDATION.
18. STEEL JOISTS SHALL BE LOCATED DIRECTLY OVER BEARING STUDS OR A LOAD DISTRIBUTION MEMBER SHALL BE PROVIDED AT THE TOP TRACK.
19. PROVIDE WEB STIFFENERS AT REACTION POINTS WHERE INDICATED BY PLANS.
20. JOIST BRIDGING SHALL BE PROVIDED AS SHOWN ON PLANS.
21. END BLOCKING SHALL BE PROVIDED WHERE JOIST ENDS ARE NOT OTHERWISE RESTRAINED FROM ROTATION.

H. UTILITY SYSTEMS:
1. THE PLUMBING, MECHANICAL, AND ELECTRICAL SYSTEMS SHALL BE READ IN CONCERT WITH THESE PLANS. ALLOWANCES SHALL BE MADE DURING THE CONSTRUCTION TO PERMIT INSTALLATION AND COORDINATION OF THESE SYSTEMS.

I. PRE-ENGINEERED METAL BUILDING DESIGNS:
ALL PRE-ENGINEERED METAL BUILDINGS SHALL BE DONE AS DESIGN BUILD PROJECTS. LAYOUTS SHALL MEET THE SPECIFICATIONS AND DIMENSIONS AS INDICATED ON THESE PLANS. THE FOUNDATION SYSTEMS, AS INDICATED HEREIN, SHALL BE USED AS THE BASE DESIGN AND FOR BIDDING PURPOSES. TO ENSURE THAT THESE FOUNDATION DESIGNS ARE APPROPRIATE, THE PROPOSED BUILDING LAYOUTS AND DESIGNS SHALL CONFORM TO THESE FOUNDATION DESIGNS. **ONLY MINOR REVISIONS TO THESE PLANS ARE ACCEPTABLE.**

J. FINISHES:
1. ALL EXTERIOR METAL AND MASONRY COLOR, STYLE AND TYPE OF FINISHES SHALL BE DETERMINED BY THE CITY OF WINCHESTER.

ABBREVIATIONS:

A.F.F.	ABOVE FINISH FLOOR
ADJ.	ADJACENT
ALT.	ALTERNATE
APPROX.	APPROXIMATE
ARCH.	ARCHITECTURAL
B.O.F.	BOTTOM OF FOOTING
BRG.	BEARING
CANT.	CANTILEVER
CL	CENTERLINE
CLR.	CLEAR
COL	COLUMN
CMU	CONCRETE MASONRY UNIT
CONC.	CONCRETE
CONT.	CONTINUOUS
C.J.	CONTROL JOINT
CSJ	CONSTRUCTION JOINT
DIAG.	DIAGONAL
DIA. or Ø	DIAMETER
DIM	DIMENSION
DN	DOWN
D.F.	DOUGLAS-FIR
DWG.	DRAWING
EA.	EACH
E.W.	EACH WAY
ELEC.	ELECTRICAL
EQ.	EQUAL
EXP. JT.	EXPANSION JOINT
EXT.	EXTERIOR
FIN.	FINISHED
F. FLR.	FINISH FLOOR
FLR.	FLOOR
GA.	GAUGE
GALV.	GALVANIZED
HSS	HOLLOW STRUCTURAL SECTION
HORIZ.	HORIZONTAL
IBC	INTERNATIONAL BUILDING CODE
INSUL.	INSULATION
INT.	INTERIOR
K	KIPS
L	LINTEL
LLH	LONG LEG HORIZONTAL
LLV	LONG LEG VERTICAL
MANUF.	MANUFACTURER
MATL.	MATERIAL
MAX.	MAXIMUM
MECH.	MECHANICAL
MIN.	MINIMUM
N/A	NOT APPLICABLE
N.I.C.	NOT IN CONTRACT
N.T.S.	NOT TO SCALE
o.c.	ON CENTER
PC	PRE-CAST
PL	PLATE
REINF.	REINFORCEMENT
REQ'D	REQUIRED
REQ'MTS	REQUIREMENTS
SHCED.	SCHEDULE
SECT.	SECTION
SW	SHEAR WALL
SHT.	SHEET
SIM.	SIMILAR
S-O-G	SLAB-ON-GRADE
SYP	SOUTHERN-YELLOW-PINE
SPF	SPRUCE-PINE-FIR
T.B.D.	TO BE DETERMINED
T.O.F .	TOP OF FOOTING
T.O.S.	TOP OF SLAB
TO. STL.	TOP OF STEEL
T.O.W.	TOP OF WALL
TYP.	TYPICAL
U.N.O.	UNLESS NOTED OTHERWISE
VB	VAPOR BARRIER
V.I.F.	VERIFY IN FIELD
VERT.	VERTICAL
W.W.M.	WELDED WIRE MESH
w/	WITH
w/o	WITHOUT

SYMBOLS

SECTION MARK	(+/- X'-X") ELEVATION DIFFERENCE
DETAIL MARK	(XX'-XX") DESIGNATED JOIST BEARING TOP OF STEEL ELEVATION ABOVE DATUM
ELEVATION	CENTERLINE
XX.XX' TOP OF FTG. ELEVATION	# NUMBER
BEARING WALL	PROPOSED ELEVATION
OR (FMC) FULL MOMENT CONNECTION	+24" STEP FOOTING (24" STEP)

CITY MAINTENANCE YARD PRE-ENGINEERED METAL STORAGE BUILDINGS WINCHESTER, VIRGINIA

List Of Structural Drawings

SHT. SB1:	GENERAL STRUCTURAL NOTES & CONSTRUCTION SPECIFICATIONS
SHT. SB1A:	SCHEDULES
SHT. SB1B:	CODE ANALYSIS & UL RATINGS
BUILDING #2:	
SHT. A1:	BUILDING #2: INTERIOR FINISHES, FIXTURE & EGRESS PLAN
SHT. SB2:	BUILDING #2: FOUNDATION PLAN
SHT. SB2A:	BUILDING #2: MEZZANINE FOUNDATION PLAN
SHT. SB3:	BUILDING #2: FLOOR PLAN
SHT. SB3A:	BUILDING #2: MEZZANINE FRAMING PLAN
SHT. SB3B:	BUILDING #2: MEZZANINE FLOOR PLAN
SHT. SB4:	BUILDING #2: ELEVATIONS
BUILDING #3:	
SHT. A2:	BUILDING #3: INTERIOR FINISHES, FIXTURE & EGRESS PLAN
SHT. SB5:	BUILDING #3: FOUNDATION PLAN
SHT. SB6:	BUILDING #3: FLOOR PLAN
SHT. SB7:	BUILDING #3: ELEVATIONS
BUILDING #6:	
SHT. A3:	BUILDING #6: INTERIOR FINISHES, FIXTURE & EGRESS PLAN
SHT. SB8:	BUILDING #6: FOUNDATION PLAN
SHT. SB9:	BUILDING #6: FLOOR PLAN
SHT. SB10:	BUILDING #6: ELEVATIONS
BUILDING #7&#9:	
SHT. A4:	BUILDING #7&#9: INTERIOR FINISHES, FIXTURE & EGRESS PLAN
SHT. SB11:	BUILDING #7&#9: FOUNDATION PLAN
SHT. SB11A:	BUILDING #7&#9: PARTIAL FOUNDATION PLAN
SHT. SB11B:	BUILDING #7&#9: PARTIAL FOUNDATION PLAN
SHT. SB12:	BUILDING #7&#9: FLOOR PLAN
SHT. SB13:	BUILDING #7&#9: ELEVATIONS
BUILDINGS #2,#3,#6,#7,&#9:	
SHT. SB14:	FOUNDATION DETAILS
SHT. SB15:	FOUNDATION DETAILS
SHT. SB16:	FOUNDATION DETAILS
SHT. SB17:	FRAMING DETAILS
SHT. SB18:	MEZZANINE FOUNDATION DETAILS
SHT. SB19:	MEZZANINE SECTIONS
SHT. SB20:	MEZZANINE FRAMING DETAILS
SHT. SB21:	MEZZANINE FRAMING DETAILS
MEP BUILDINGS #2,#3,#6,#7,&#9:	
MECHANICAL:	
SHT. M1.1:	SCHEDULES & DETAILS
SHT. M2.1:	BUILDING #2 - MECHANICAL & GAS PLAN
SHT. M2.2:	BUILDING #2 - MEZZANINE MECHANICAL & GAS PLAN
SHT. M2.3:	BUILDING #3 - MECHANICAL & GAS PLAN
SHT. M2.4:	BUILDING #6 - MECHANICAL & GAS PLAN
SHT. M2.5:	BUILDING #7 - MECHANICAL & GAS PLAN
SHT. M3.1:	BUILDING #7 - WASH BAY DETAILS
SHT. M3.2:	BUILDING #7 - WASH BAY DETAILS
SHT. M3.3.	BUILDING #7 - WASH BAY DETAILS
ELECTRICAL:	
SHT. E1.1:	BUILDING #2 - LIGHTING PLAN
SHT. E1.2:	BUILDING #2 - MEZZANINE LIGHTING PLAN
SHT. E2.1:	BUILDING #2 - POWER PLAN
SHT. E2.2:	BUILDING #2 - MEZZANINE POWER PLAN
STH. E1.3:	BUILDING #3 - LIGHTING PLAN
SHT. E2.3:	BUILDING #3 - POWER PLAN
SHT. E1.5:	BUILDING #6 - LIGHTING PLAN
SHT. E2.5:	BUILDING #6 - POWER PLAN
SHT. E1.6:	BUILDING #7 - LIGHTING PLAN
SHT. E2.6:	BUILDING #7 - POWER PLAN
SHT. E3.1:	ELECTRICAL NOTES
PLUMBING:	
SHT. P1.1:	SCHEDULES & DETAILS
SHT. P1.2:	PLUMBING FIXTURES & DETAILS
SHT. P2.1:	BUILDING #2 - WATER & SANITARY WASTE PLAN
SHT. P2.2:	BUILDING #3 - WATER & SANITARY WASTE PLAN
SHT. P2.3:	BUILDING #6 - WATER & SANITARY WASTE PLAN
SHT. P2.4:	BUILDING #7 - WATER & SANITARY WASTE PLAN
SHT. P2.5:	SITE YARD HYDRANTS PLAN

NORTH (Building)

Winchester Virginia

CITY YARDS MAINTENANCE FACILITY: RENOVATION AND ADDITIONS
301 EAST CORK ST.
WINCHESTER, VIRGINIA 22601

CITY OF WINCHESTER VIRGINIA FARE FAC 1744

ARCHITECT:
GDA Architecture Planning Interiors Landscape
Grove & Dall'Olio Architects pllc AIA, LEED AP
Lisa Dall'Olio lisa@GDAaia.com • GDAaia.com
325 Migration Lane Gerrardstown, WV 25420 304-267-2120
18 West Boscawen Street Winchester, VA 22601 540-773-2328

Seal

PAINTER-LEWIS, P.L.C.
817 CEDAR CREEK GRADE, SUITE 120
WINCHESTER, VIRGINIA 22601
Telephone: (540) 662-5792
Facsimile: (540) 662-5793
Email: office@painterlewis.com
CONSULTING ENGINEERS

COMMONWEALTH OF VIRGINIA
TIMOTHY G. PAINTER
Lic. No. 018260
08/14/19
PROFESSIONAL ENGINEER

M.E.P. ENGINEERS:
CDi
Comfort Designs Inc.
620 Pennsylvania Avenue
Winchester, VA 22604
540 665-2846

Seal

ISSUE/REVISIONS:

DRAWING TITLE:	CITY YARDS: BLDGS. 2,3,6,7 & 9
SHEET TITLE:	GENERAL NOTES
DATE:	AUGUST 5, 2019
PROJECT NO.:	1801014
SCALE:	AS NOTED
SHEET:	SB1

FOOTING SCHEDULE

FOUNDATION	SIZE	REMARKS
WF1	16"x8" THICKENED SLAB with (2) #4 BARS (Cont.)	TYPICAL THICKENED SLAB FOOTING SEE DETAIL ON SHEET SB17
WF2	24"x12" CONCRETE WALL FOOTING with (3) #4 BARS (Cont.)	TYPICAL FOUNDATION WALL FOOTING SEE DETAILS ON SHEET SB14
WF3	30"x12" CONCRETE WALL FOOTING with (3) #4 BARS (Cont.)	TYPICAL FOUNDATION WALL FOOTING SEE DETAILS ON SHEET SB14
F1	3'-0"x3'-0"x12" CONCRETE PIER FOOTING with (3) #5 BARS, E.W.	TYPICAL PIER FOOTING SEE DETAILS ON SHEETS SB15-SB19
F2	4'-0"x4'-0"x12" CONCRETE PIER FOOTING with (4) #5 BARS, E.W.	TYPICAL PIER FOOTING SEE DETAILS ON SHEETS SB15-SB19
F3	5'-0"x5'-0"x12" CONCRETE PIER FOOTING with (5) #5 BARS, E.W.	TYPICAL PIER FOOTING SEE DETAILS ON SHEETS SB15-SB19
F4	6'-0"x6'-0"x12" CONCRETE PIER FOOTING with (6) #5 BARS, E.W.	TYPICAL PIER FOOTING SEE DETAILS ON SHEETS SB15-SB19
F5	7'-0"x7'-0"x12" CONCRETE PIER FOOTING with (7) #5 BARS, E.W.	TYPICAL PIER FOOTING SEE DETAILS ON SHEETS SB15-SB19
F6	8'-0"x8'-0"x12" CONCRETE PIER FOOTING with (8) #5 BARS, E.W.	TYPICAL PIER FOOTING SEE DETAILS ON SHEETS SB15-SB19
F7	9'-0"x9'-0"x12" CONCRETE PIER FOOTING with (9) #5 BARS, E.W.	TYPICAL PIER FOOTING SEE DETAILS ON SHEETS SB15-SB19
F8	5'-0"x8'-0"x16" CONCRETE PIER FOOTING with #5 BARS @ 12" O.C., E.W. (T&B)	TYPICAL PIER FOOTING SEE DETAILS ON SHEETS SB15-SB19
F9	5'-0"x9'-0"x12" CONCRETE PIER FOOTING with #5 BARS @ 12" O.C., E.W.	TYPICAL PIER FOOTING SEE DETAILS ON SHEETS SB15-SB19
F10	7'-0"x10'-0"x12" CONCRETE PIER FOOTING with #5 BARS @ 10" O.C., E.W. (T&B)	TYPICAL PIER FOOTING SEE DETAILS ON SHEETS SB15-SB19

PEDESTAL SCHEDULE

PEDESTAL	SIZE	REMARKS
P1	16"x18" CONC. PEDESTAL w/ (8) #5 BARS	SEE DETAIL SHEET SB15
P2	16"x20" CONC. PEDESTAL w/ (8) #5 BARS	SEE DETAIL SHEET SB15
P3	16"x20" CONC. PEDESTAL w/ (8) #5 BARS	SEE DETAIL SHEET SB15
P4	16"x20" CONC. PEDESTAL w/ (8) #5 BARS	SEE DETAIL SHEET SB15
P5	20"x30" CONC. PEDESTAL w/ (12) #5 BARS	SEE DETAIL SHEET SB15
P6	20"x30" CONC. PEDESTAL w/ (12) #5 BARS	SEE DETAIL SHEET SB15
P7	20"x30" CONC. PEDESTAL w/ (12) #5 BARS	SEE DETAIL SHEET SB16
P8	16"x36" CONC. PEDESTAL w/ (12) #5 BARS	SEE DETAIL SHEET SB16
P9	20"x60" CONC. PEDESTAL w/ (24) #5 BARS	SEE DETAIL SHEET SB16
P10	16"x16" CONC. PEDESTAL w/ (8) #5 BARS	SEE DETAIL SHEET SB18
P11	16"ø CONC. PEDESTAL w/ (8) #3 BARS	SEE DETAIL SHEET SB19

STEEL COLUMN SCHEDULE

COLUMN	SIZE	SUPPORT	
C1	HSS 4"x4"x¼" TUBULAR STEEL COLUMN	BASE PLATE:	10"x½"x10"
		TOP PLATE:	4"x¼"x4"
C2	HSS 6"x6"x¼" TUBULAR STEEL COLUMN	BASE PLATE:	12"x¾"x12"
		TOP PLATE:	6"x¾"x12"
C2a	HSS 6"x6"x¼" TUBULAR STEEL COLUMN	BASE PLATE:	12"x¾"x12"
		TOP PLATE:	6"x¾"x6"

STUD WALL SCHEDULE

WALL	STUDS	DETAILS
W1	362PDS125-43 STUDS @ 16" O.C.	INTERIOR PARTITION WALLS
W2	600PDS125-19 STUDS @ 16" O.C.	INTERIOR PARTITION WALLS
W3	362S162-43 STUDS @ 16" O.C.	INTERIOR BEARING WALLS
W4	600S200-54 STUDS @ 16" O.C.	INTERIOR BEARING WALLS

NOTE: SHEATHING SHALL CONSIST OF ½" MIN. THICKNESS GWB, AND SHALL BE FASTENED TO STUDS WITH #10 SCREWS @ 7" O.C. AT PANEL EDGES AND @ 16" O.C. IN THE FIELD

HEADER SCHEDULE

HEADER	SIZE	SUPPORT
H1	600T125-43 TRACK 600S200-54 HEADER	600S200-54 STUD
H2	600T125-43 TRACK (2) 600S200-54 HEADER 600T125-43 TRACK	(2) 600S200-54 STUD
H3	600T125-43 TRACK (2) 1000S200-68 HEADER 600T125-43 TRACK	(2) 600S200-54 STUD

ANCHOR BOLT SCHEDULE

ANCHOR	SIZE
AB1	TBD

ANCHOR BOLT DESIGN WILL BE COMPLETED IN COORDINATION WITH THE PLANS AND DESIGN TO BE PROVIDED BY THE BUILDING MANUFACTURER SELECTED FOR THIS PROJECT.

DOOR SCHEDULE

DOOR NO.	SGL./ PR.	SIZE	TYPE	THRESH	JAMB	MATERIAL	UL RATING	FINISH	HDW SET	REMARKS
101A	S	3'-0" x 6'-8" x 1 3/4"	B	ALUM.	H.M.	INSUL. METAL	-	PAINTED	ENTRY	CLOSER
102A	S	3'-0" x 6'-8" x 1 3/4"	A	-	H.M.	HOLLOW CORE METAL	-	PAINTED	STORAGE	CLOSER
102B	S	3'-0" x 6'-8" x 1 3/4"	A	-	H.M.	FIBERGLASS	-	PAINTED	STORAGE	CLOSER
103A	PR.	3'-0" x 6'-8" x 1 3/4"	A	-	H.M.	HOLLOW CORE METAL	-	PAINTED	STORAGE	CLOSER
104A	S	3'-0" x 6'-8" x 1 3/4"	A	-	H.M.	HOLLOW CORE METAL	1HR	PAINTED	STORAGE	CLOSER
105A	PR.	3'-0" x 6'-8" x 1 3/4"	A	-	H.M.	HOLLOW CORE METAL	1HR	PAINTED	STORAGE	CLOSER
106A	S	14'-0" x 16'-0"	C	-	H.M.	INSUL. METAL	-	PREFINISHED	STANDARD	ELECTRIC OPENER
107A	S	22'-0" x 16'-0"	C	-	H.M.	INSUL. METAL	-	PREFINISHED	STANDARD	ELECTRIC OPENER
108A	S	24'-0" x 16'-0"	C	-	H.M.	INSUL. METAL	-	PREFINISHED	STANDARD	ELECTRIC OPENER

HARDWARE SPEC: SCHLAGE BRUSHED ALUMINUM FINISH LEVER STYLE (ADA), 1 1/2 PAIR BUTT HINGES, TYPICALLY FLOOR STOPS WHERE REQUIRED, CLOSERS TO MATCH LATCH SET FINISH WHERE REQUIRED, MEET CODE

METAL FRAMES: COMPLY WITH ANSI/SDI 100 RECOMMENDED SPECIFICATIONS FOR STANDARD STEEL DOORS & FRAMES (4" FRAME HEADS @ 7'-0" DOORS, TYP.)

DOOR TYPES

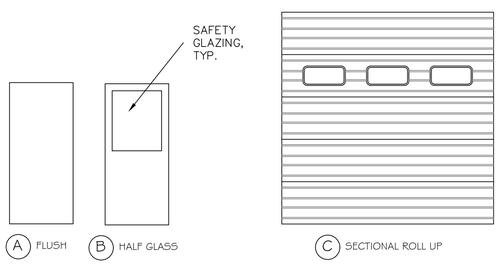

NORTH (Building)

Winchester Virginia

CITY YARDS MAINTENANCE FACILITY: RENOVATION AND ADDITIONS
301 EAST CORK ST.
WINCHESTER, VIRGINIA 22601

ARCHITECT:

GDA

Seal

PAINTER-LEWIS, P.L.C.
817 CEDAR CREEK GRADE, SUITE 120
WINCHESTER, VIRGINIA 22601
Telephone: (540) 662-5792
Facsimile: (540) 662-5793
Email: office@painterlewis.com

CONSULTING ENGINEERS

COMMONWEALTH OF VIRGINIA
TIMOTHY G. PAINTER
Lic. No. 018260
08/14/19
PROFESSIONAL ENGINEER

M.E.P. ENGINEERS:

CDi

Comfort Designs Inc.
620 Pennsylvania Avenue
Winchester, VA 22604
540 665-2846

Seal

ISSUE/REVISIONS:

DRAWING TITLE: CITY YARDS: BLDGS. 2,3,6,7 & 9

SHEET TITLE: SCHEDULES

DATE: AUGUST 5, 2019

PROJECT NO.: 1801014

SCALE: AS NOTED

SHEET: SB1A

CODE ANALYSIS FOR ENCLOSED METAL BUILDINGS 2, 3, 6 and 7

Proposed Use Groups:
Warehouses - S2 - Low-hazard storage

Construction Type: IIB

Area of allowable uses: 26,000 SF
Allowable height : 55′

Building 2 Total Square Footage – 12,764 SF
Building 3 Total Square Footage – 10,219 SF
Building 6 Total Square Footage – 4,175 SF
Building 7 Total Square Footage – 13,390 SF

Buildings do not exceed area or height limitations.

Sprinklers are required based upon section 406.6.3 for buildings 2, 3 and 7 because they are greater than 5,000 square feet and will contain commercial vehicles.

Fire Resistance Rating Requirements:
Type IIB -
frame - 0 hour
ext bearing walls - 0 hours
int. bearing walls - 0 hour
floor joists & beams - 0 hr.
roof beams/joists - 0

Occupancy Load:

Building 2
First Floor Storage 11,644 SF / 500 gross per occupant = 24 people
Second Floor Storage 1,120 SF / 2 people
Total Square Footage/Total occupancy = 12,764/26 people

Building 3
First Floor Storage 9,654 SF / 500 gross per occupant = 19 people
Second Floor Storage 565 SF / 500 gross per occupant =1 people
Total Square Footage/occupancy = 10,219/20 people

Building 6
First Floor Storage 4,175 SF / 500 gross per occupant = 8 people

Building 7
First Floor Storage 12,390 SF / 500 gross per occupant = 25 people

Total occupancy of enclosed metal buildings: 79 people

Plumbing Requirements: S-2 79 people
1 WC (1 per 100)
1 lavs (1 per 100)
1 DF (1 per 1000)
1 Service Sink

Bathroom facilities will be provided in Buildings 1 and 7. All staff who will use these metal storage buildings will have access to those new bathroom facilities

Number of Exits:

All buildings and
spaces provided with more than one means of egress except As per VCC section 1006.2.1 Buildings 2 and 3 Mezzanines have occupancy less than 29 and has travel distance less than 100′ so one exit is permitted.

Building 6 has one 3′-0″ man door leading directly to the exterior and is permitted to do so by section 1006.3.2(2) as it has an occupancy less than 30 and the travel distance to that single man doos is leass than 75′

GDA Architecture Planning Interiors Landscape
Grove & Dall'Olio Architects pllc AIA, LEED AP
Lisa Dall'Olio lisa@GDAaia.com • GDAaia.com
325 Migration Lane Gerrardstown, WV 25420 304-267-2120
18 West Boscawen Street Winchester, VA 22601 540-773-2328

Design No. U432

April 19, 2017

Bearing Wall Rating — 1 Hr (See Item 2)

Nonbearing Wall Rating — 1 Hr (See Item 2)

This design was evaluated using a load design method other than the Limit States Design Method (e.g., Working Stress Design Method). For jurisdictions employing the Limit States Design Method, such as Canada, a load restriction factor shall be used — See Guide BXUV or BXUV7

* Indicates such products shall bear the UL or cUL Certification Mark for jurisdictions employing the UL or cUL Certification (such as Canada), respectively.

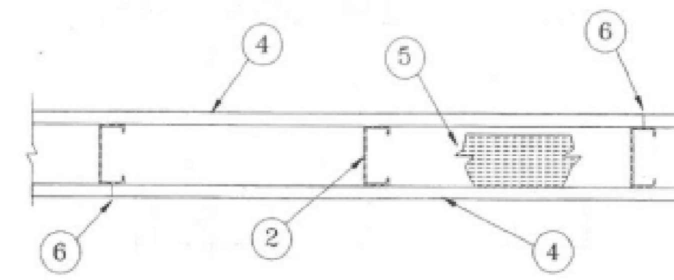

1. Floor and Ceiling Runners — (Not shown) — Channel shaped, fabricated from min 0.0329 in. thick, bare metal thickness (No. 20 MSG) corrosion-protected steel, that provides a sound structural connection between steel studs and adjacent assemblies such as floors, ceilings and/or other walls. Attached to floor and ceiling assemblies with steel fasteners spaced not greater than 24 in. OC.

2. Steel Studs — Min 0.0329 in. thick, bare metal thickness (No. 20 MSG) corrosion-protected steel studs, min 3-1/2 in. wide, cold formed, designed in accordance with the current edition of the Specification for the Design of Cold-Formed Steel Structural Members by the American Iron and Steel Institute (AISI). All design details enhancing the structural integrity of the wall assembly, including the axial design load of the studs, shall be as specified by the steel stud designer and/or producer, and shall meet the requirements of all applicable local code agencies. The max stud spacing shall not exceed 24 in. OC. Studs attached to floor and ceiling runners with 1/2 in. long Type S-12 steel screws on both sides of the studs or by welded or bolted connections designed in accordance with the AISI specifications (bearing walls). Studs to be cut 1/2 to 3/4 in. less than assembly height and friction-fitted into floor and ceiling runners (nonbearing walls).

3. Lateral Support Members — (Not shown) — Where required for lateral support of studs, support shall be provided by means of steel straps, channels or other similar means as specified in the design of a particular steel stud wall system.

4. Gypsum Board* — Nom 5/8 in. thick, 24 to 54 in. wide gypsum panels, attached vertically or horizontally with 1-1/4 in. long Type S-12 steel screws. When applied vertically to studs, joints centered over studs and staggered one stud cavity on opposite sides of studs and attached with screws spaced 8 in. OC along the edges and 12 in. OC in the field. When applied horizontally to studs, no distance requirement on joints on opposite sides of studs and attached with screws spaced 8 in. OC along the edges and in the field. When used in widths other than 48 in., gypsum panels to be installed horizontally.

UNITED STATES GYPSUM CO — Type FRX-G.

5. Batts and Blankets* — (Optional, not shown) — Placed in stud cavities, any glass fiber or mineral wool insulation bearing the UL Classification Marking as to Surface Burning Characteristics and/or Fire Resistance. See Batts and Blankets (BKNV or BZJZ) Categories for names of Classified companies.

6. Joint Tape and Compound — Vinyl or casein, dry or premixed joint compound applied in two coats to joints and screw heads. Paper tape, nom 2 in. wide, embedded in first layer of compound over all joint. Paper tape and joint compound may be omitted when gypsum boards are supplied with square edges.

7. Caulking and Sealants* — (Optional, not shown) — A bead of acoustical sealant applied around the partition perimeter for sound control.

UNITED STATES GYPSUM CO — Type AS

* Indicates such products shall bear the UL or cUL Certification Mark for jurisdictions employing the UL or cUL Certification (such as Canada), respectively.

Design No. G551

April 23, 2019

Unrestrained Assembly Rating - 1 or 2 Hr. (See Items 5A, 5B, 6)

This design was evaluated using a load design method other than the Limit States Design Method (e.g., Working Stress Design Method). For jurisdictions employing the Limit States Design Method, such as Canada, a load restriction factor shall be used — See Guide BXUV or BXUV7

* Indicates such products shall bear the UL or cUL Certification Mark for jurisdictions employing the UL or cUL Certification (such as Canada), respectively.

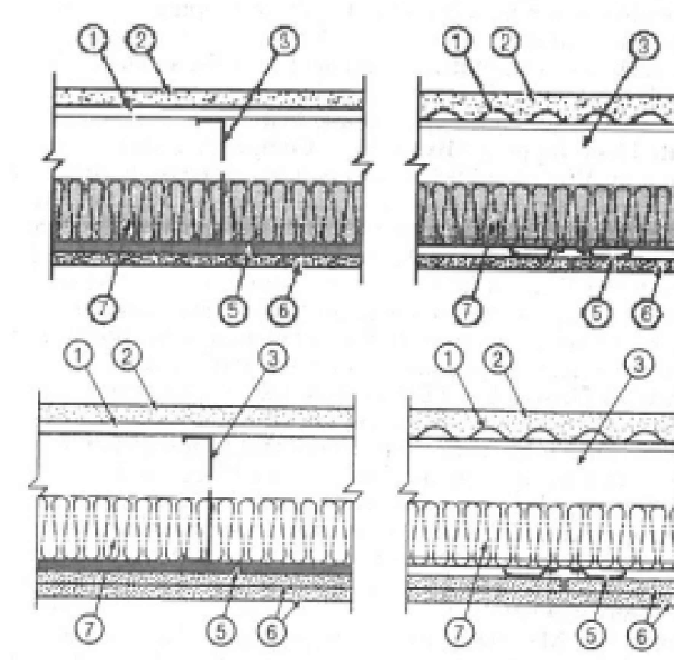

1. Steel Deck — Min 9/16 in. deep, 22 MSG galv corrugated fluted steel deck. Overlapped one corrugation at each side and attached to each joist with 5/8 in. long No. 10-16 TEK screws at each side joint and no more than 12 in. OC between sides.

2. Floor Topping Mixture* — Compressive strength to be 2500 psi min. Minimum thickness to be 1 in. as measured from the top plane of the deck or the top plane of the Floor Mat Material*. Refer to manufacturer's instructions accompanying the material for specific mix design. An ethylene vinyl acetate adhesive may be applied to the steel deck prior to the installation of the floor topping mixture at a maximum application rate of 0.025 lbs./ft2.

UNITED STATES GYPSUM CO — Type CSD , LRK, HSLRK

USG MEXICO S A DE C V — Types LRK, HSLRK, CSD

2. Floor Mat Materials* — (Optional) - Floor mat material loose laid over the subfloor. Refer to manufacturer's instructions regarding the minimum thickness of floor topping over each floor mat material.

UNITED STATES GYPSUM CO — Types SAM, LEVELROCK® Brand Sound Reduction Board, LEVELROCK® Brand Floor Underlayment SRM-25

Alternate Floor Mat Materials* — (Optional) - Floor mat material nom 3/8 in. thick loose laid over the subfloor. Floor topping thickness a min 3/4 in. over the floor mat.

GRASSWORX L L C — Type SC50

2A. **Alternate Floor Topping Mixture*** — Compressive strength to be of 3000 psi min. Minimum thickness to be 1 in. as measured from the top plane of the deck or the top plane of the Floor Mat Material*. Refer to manufacturer's insrtuctions accompanying the material for specific design mix.

MAXXON CORP — Types D-C, L-R, T-F, CT

RAPID FLOOR SYSTEMS — Types RFU, Ortecrete

Floor Mat Materials* — (Optional) — Not Shown - Floor mat material loose laid over the subfloor. Refer to manufacturer's instructions regarding the minimum thickness of floor topping over each floor mat material.

MAXXON CORP — Type Acousti-Mat 1/8, Acousti-Mat 1/4, Acousti-Mat 1/4 Premium, Acousti-Mat 3/8, Acousti-Mat 3/8 Premium, Acousti-Mat 3/4, Acousti-Mat 3/4 Premium, Acousti-Top.

Floor Mat Reinforcement — (Optional) - Refer to manufacturer's instructions regarding minimum thickness of floor topping for use with floor mat reinforcement. Metal Lath — (Optional) — 3/8 in. expanded galvanized steel diamond mesh, 3.4 lbs/sq yd loose laid over the floor mat material. Fiber Glass Reinforcement — (Optional) - 0.015 in. thick PVC coated non-woven fiberglass mesh, 0.368 lbs./sq. yd loose laid over the floor mat material.

3. Structural Steel Members* — The proprietary joists are channel-shaped, 9-1/4 in. min depth. Joists are fabricated from min No. 16 MSG galv steel. Joists spaced max 24 in. OC. Joists attached to joist rim with three 3/4 in. long self-drilling No. 10-16 TEK screws through tab to the outside of the web. At joist rim splices bearing on supports, joists rims are connected using an overlapping section of a 12 in. long splice plate (a joist piece), with four 3/4 in. long self-drilling No. 10-16 TEK screws to each rim piece.

CLARKDIETRICH BUILDING SYSTEMS — Type TDJ or TDW floor joists, TD rim joist

4. Joist Bridging — Not shown — For use with Item 3- Installed immediately after joists are erected and before construction loads are applied. The bridging, 21/2TDSB18, consisting of No. 18 MSG galv steel, 2-1/2 in. wide by 21-3/4 in. long structural bridging staggered between the steel joists attached to the bottom joist flange with one 3/4 in. long self-drilling No. 10-16 TEK screw at each end tab of bridging. Solid bridging consisting of cut to length joist sections placed between outer joists and at center joist with 8 ft OC max spacing. Solid bridging are screw-attached at joist web using EasyClip™ S-Series S547 (which is a 1-1/2 in. by 1-1/2 in. by 7 in. long, 16 MSG, min 50 ksi support clip) with two 3/4 in. long self-drilling No. 10-16 TEK screws per leg on one side and the other side with an EasyClip™ E-Series E547 (which is a 4 in. by 1-1/2 in. by 7 in. long, 16 MSG, min 50 ksi support clip) with two 3/4 in. long self-drilling No. 10-16 TEK screws per leg.

5. Resilient Channels — 1/2 in. deep, formed of 25 MSG galv steel, spaced 12 in. OC perpendicular to joists. Channels oriented opposite at wallboard butt-joints. Channel splices overlapped 4 in. beneath steel joists. Channels secured to each joist with 1/2 in. Type S-12 low profile screws. Channels oriented opposite at wallboard butt joints (spaced 6 in. OC) as shown in the above illustration.

5A. **Alternate Steel Framing Members** — For the 1 Hour Rating - (Not Shown) - As an alternate to Item 5, main runners, cross tees, cross channels and wall angle as listed below:

- **a. Main Runners** — Nom 10 or 12 ft long, 15/16 in. or 1-1/2 in. wide face, spaced 4 ft. OC. Main runners suspended by min 12 SWG galv steel hanger wires spaced 48 in. OC. Hanger wires to be located adjacent to main runner/cross tee intersections. Hanger wires inserted through holes drilled through web of joists and twist-tied.
- **b. Cross Tees** — Nom 4 ft long, 1-1/2 in. wide face, installed perpendicular to the main runners, spaced 16 in. OC. Additional cross tees or cross channels used at 8 in. from each side of butted gypsum panel end joints. The cross tees or cross channels may be riveted or screw attached to the wall angle or channel to facilitate the ceiling installation.
- **c. Cross Channels** — Nom 4 or 12 ft long, installed perpendicular to main runners, spaced 16 in. OC.
- **d. Wall Angle or Channel** — Painted or galv steel angle with 1 in. legs or channel with 1 in. legs, 1-9/16 in. deep attached to walls at perimeter of ceiling with fasteners 16 in. OC. To support steel framing member ends and for screw-attachment of the gypsum panel.

  CGC INC — Type DGL or RX.

  USG INTERIORS LLC — Type DGL or RX.

5B. **Steel Framing Members*** - (Not Shown) — For the 1 Hour Rating Only — As an alternate to Item 5 — Furring channels and Steel Framing Members* as described below:

- **a. Furring Channels** — Formed of No. 25 MSG galv steel, 2-9/16 in. or 2-23/32 in. wide by 7/8 in. deep, spaced 24 in. OC perpendicular to joists. Channels secured to joists as described in Item b. Ends of adjoining channels overlapped 6 in. and tied together with double strand of No. 18 SWG galv steel wire near each end of overlap.
- **b. Steel Framing Members*** — Used to attach furring channels (Item a) to joists (Item 3). Clips spaced 48 in. OC and secured to the bottom chord of alternating joists with min 1-5/8 in. long No. 8 self-drilling, self-tapping, bugle, flat or hex head screw through the center grommet. Furring channels are friction fitted into clips. RSIC-1 clip for use with 2-9/16 in. wide furring channels. RSIC-1 (2.75) clip for use with 2-23/32 in. wide furring channels. Adjoining channels are overlapped as described in Item a. Additional clips required to hold furring channel that supports the gypsum board butt joints, as described in Item 6. Two layers of gypsum board required as described in Item 6.

  PAC INTERNATIONAL L L C — Types RSIC-1, RSIC-1 (2.75).

5C. **Steel Framing Members*** - (Not Shown) — For the 1 Hour Rating Only — As an alternate to Item 5 — Furring channels and Steel Framing Members* as described below:

- **a. Furring Channels** — Formed of No. 25 MSG galv steel, 2-3/8 in. wide by 7/8 in. deep, spaced 12 in. OC perpendicular to joists. Channels secured to joists as described in Item b. Ends of adjoining channels overlapped 6 in. and tied together with double strand of No. 18 SWG galv steel wire near each end of overlap.
- **b. Steel Framing Members*** — Used to attach furring channels (Item a) to joists (Item 3). Clips spaced 24 in. OC and secured to the bottom chord of consecutive joists with min 1-5/8 in. long No. 8 self-drilling, self-tapping, bugle, flat or hex head screw through the center grommet. Furring channels are friction fitted into clips. Adjoining channels are overlapped as described in Item a. Additional clips required to hold furring channel that supports the gypsum board butt joints, as described in Item 6. Two layers of gypsum board required as described in Item 6.

  PLITEQ INC — Type GENIECLIP

5D. **Alternate Steel Framing Members*** — (Not Shown) - For the 1 Hour Rating Only - As an alternate to item 5 - Furring channels and Steel Framing Members* as described below.

- **a. Furring Channels** — Formed of No. 25 MSG galv steel, 2-5/8 in. wide by 7/8 in deep, spaced 12 in OC, perpendicular to joists. Channels secured to joists as described in Item b.
- **b. Steel Framing Members*** — Used to attach furring channels (Item a) to joists (Item 3). Clips spaced at 48" OC and secured to the bottom of the joists with min 1-5/8 in. long No. 8 self-drilling, self-tapping, bugle, flat or hex head screw through the center hole. Furring channels are then friction fitted into clips. Ends of channels are overlapped 6" and tied together with double strand of No. 18 AWG galvanized steel wire.Additional clips are required to hold the Gypsum Butt joints as described in Item 6.

  STUDCO BUILDING SYSTEMS — RESILMOUNT Sound Isolation Clips - Type A237R

5E. **Steel Framing Members*** — (Not Shown) - For the 1 Hour Rating Only — As an alternate to Item 5 — Furring channels and Steel Framing Members* as described below:

- **a. Furring Channels** — Formed of No. 25 MSG galv steel, 2-23/32 in. wide by 7/8 in. or 1-1/2 in. deep, spaced 24 in. OC perpendicular to joists. Channels secured to joists as described in Item b. Ends of adjoining channels overlapped 6 in. and tied together with double strand of No. 18 SWG galv steel wire near each end of overlap.
- **b. Steel Framing Members*** — Used to attach furring channels (Item a) to joists (Item 3). Clips spaced 48 in. OC and secured to the bottom chord of alternating joists with min 1-5/8 in. long No. 8 self-drilling, self-tapping, bugle, flat or hex head screw through the center grommet. Furring channels are friction fitted into clips. Adjoining channels are overlapped as described in Item a. Additional clips required to hold furring channel that supports the gypsum board butt joints, as described in Item 6. Two layers of gypsum board required as described in Item 6. \

  CLARKDIETRICH BUILDING SYSTEMS — Type ClarkDietrich Sound Clip

6. Gypsum Board* — For the 1 Hour Rating - Nom 5/8 in. thick, 48 in. wide gypsum panels. When resilient channels (Item 5) are used, gypsum panels installed with long dimension perpendicular to resilient channels. Gypsum panels secured with 1 in. long Type S bugle-head screws spaced 8 in. OC in both the field and the perimeter, and 1-1/2 in. from side edges of the board. When Steel Framing Members (Item 5A) are used, gypsum panels installed with long dimension perpendicular to cross tees with side joints centered along main runners and end joints centered along cross tees. Panels fastened to cross tees with 1 in. long Type S bugle-head screws spaced 8 in. OC in the field and along end joints. Panels fastened to main runners with 1 in. long Type S bugle-head screws spaced midway between cross tees. Screws along sides and ends of panels spaced 3/8 to 1/2 in. from panel edge. End joints of panels shall be staggered with spacing between joints on adjacent panels not less than 2 ft OC. When Steel Framing Members (Item 5B, 5C or 5E) are used, fire rating is limited to 1 Hour and two layers of nom 5/8 in. thick, 4 ft wide gypsum board are installed with long dimensions perpendicular to furring channels. Base layer attached to furring channels as described below for the 2 Hour Rating. Butted end joints of base layer shall be staggered min. 2 ft within the assembly, and occur midway between the continuous furring channels. Each end of each base layer gypsum panel shall be supported by a single length of furring channel equal to the width of the gypsum panel plus 6 in. on each end. The two support furring channels shall be spaced approximately 3-1/2 in. OC, and be attached to underside of the truss with one clip at each end of the channel. Face layer attached to furring channels and base layer as described below for the 2 Hour Rating. . When Steel Framing Members (Item 5D) are used, fire rating is limited to 1 Hour and two layers of nom 5/8 in. thick, 4 ft wide gypsum board are installed with long dimensions perpendicular to furring channels. Base layer secured to furring channels with nom 1 in. long Type S bugle-head steel screws spaced 8 in. OC in the field of the board. Gypsum board butted end joints shall be staggered minimum 48 in. and centered over main furring channels. At the gypsum board butt joints, each end of each gypsum board shall be supported by a single length of furring channel equal to the width of the gypsum board plus 3 in. on each end. The two supporting furring channels shall be spaced approximately 3 in. in from end joint. Screw spacing along the gypsum board butt joint and along both additional furring channels shall be 8 in. OC. Additional screws shall be placed in the adjacent section of gypsum board into the aforementioned 3 in. extension of the extra butt joint channels as well as into the main channel that runs between. Butt joint furring channels shall be attached with one RESILMOUNT Sound Isolation Clip at each end of the channel. Face layer attached to furring channels and base layer as described below for the 2 Hour Rating For the 2 Hour Rating - Nom 5/8 in. thick, 48 in. wide gypsum panels. Base layer installed with long dimension perpendicular to resilient channels. Gypsum panels secured with 1-1/4 in. long Type S bugle-head screws spaced 12 in. OC in both the field and the perimeter, and 1-1/2 in. from side edges of the board. Face layer installed with long dimension perpendicular to resilient channels with joints offset 24 in. from base layer. Gypsum panels secured with 1-5/8 in. long Type S bugle-head screws spaced 8 in. OC in both the field and the perimeter, and 1-1/2 in. from side edges of the board. At the butt joint 1-1/2 in. long Type G screws to be installed to attach face layer to base layer. Type G screws spaced 8 in. OC and 1-1/2 in. from side edges of the board.

CGC INC — Types C, IP-X2, IPC-AR

UNITED STATES GYPSUM CO — Types C, IP-X2, IPC-AR, ULIX

USG BORAL DRYWALL SFZ LLC — Type C

USG MEXICO S A DE C V — Types C, IP-X2, IPC-AR

7. Batts and Blankets* — Mineral wool or glass fiber insulation, min 3-1/2 in. thick, bearing the UL Classification Marking for Surface Burning Characteristics. Insulation fitted in the concealed space, draped over the resilient channel/gypsum panel or Steel Framing Members/gypsum panel ceiling membrane.

8. Joint System — Not Shown — Vinyl, dry or premixed joint compound, applied in two coats to joints and screw heads; paper tape, 2 in. wide, embedded in first layer of compound over all joints.

* Indicates such products shall bear the UL or cUL Certification Mark for jurisdictions employing the UL or cUL Certification (such as Canada), respectively.

NORTH (Building)

Winchester Virginia

CITY YARDS MAINTENANCE FACILITY: RENOVATION AND ADDITIONS
301 East Cork St.
Winchester, Virginia 22601

CITY OF WINCHESTER VIRGINIA FARE FAC 1744

ARCHITECT:
GDA Architecture Planning Interiors Landscape
Grove & Dall'Olio Architects pllc AIA, LEED AP
Lisa Dall'Olio lisa@GDAaia.com • GDAaia.com
325 Migration Lane Gerrardstown, WV 25420 304-267-2120
18 West Boscawen Street Winchester, VA 22601 540-773-2328

Seal

PAINTER-LEWIS, P.L.C.
817 CEDAR CREEK GRADE, SUITE 120
WINCHESTER, VIRGINIA 22601
Telephone: (540) 662-5792
Facsimile: (540) 662-5793
Email: office@painterlewis.com
CONSULTING ENGINEERS

COMMONWEALTH OF VIRGINIA
TIMOTHY G. PAINTER
Lic. No. 018260
08/14/19
PROFESSIONAL ENGINEER

M.E.P. ENGINEERS:
CDi
Comfort Designs Inc.
620 Pennsylvania Avenue
Winchester, VA 22604
540 665-2846

Seal

ISSUE/REVISIONS:

DRAWING TITLE:
CITY YARDS: BLDGS. 2,3,6,7 & 9

SHEET TITLE:
CODE ANALYSIS & UL RATINGS

DATE:	AUGUST 5, 2019
PROJECT NO.:	1801014
SCALE:	AS NOTED
SHEET:	SB1B

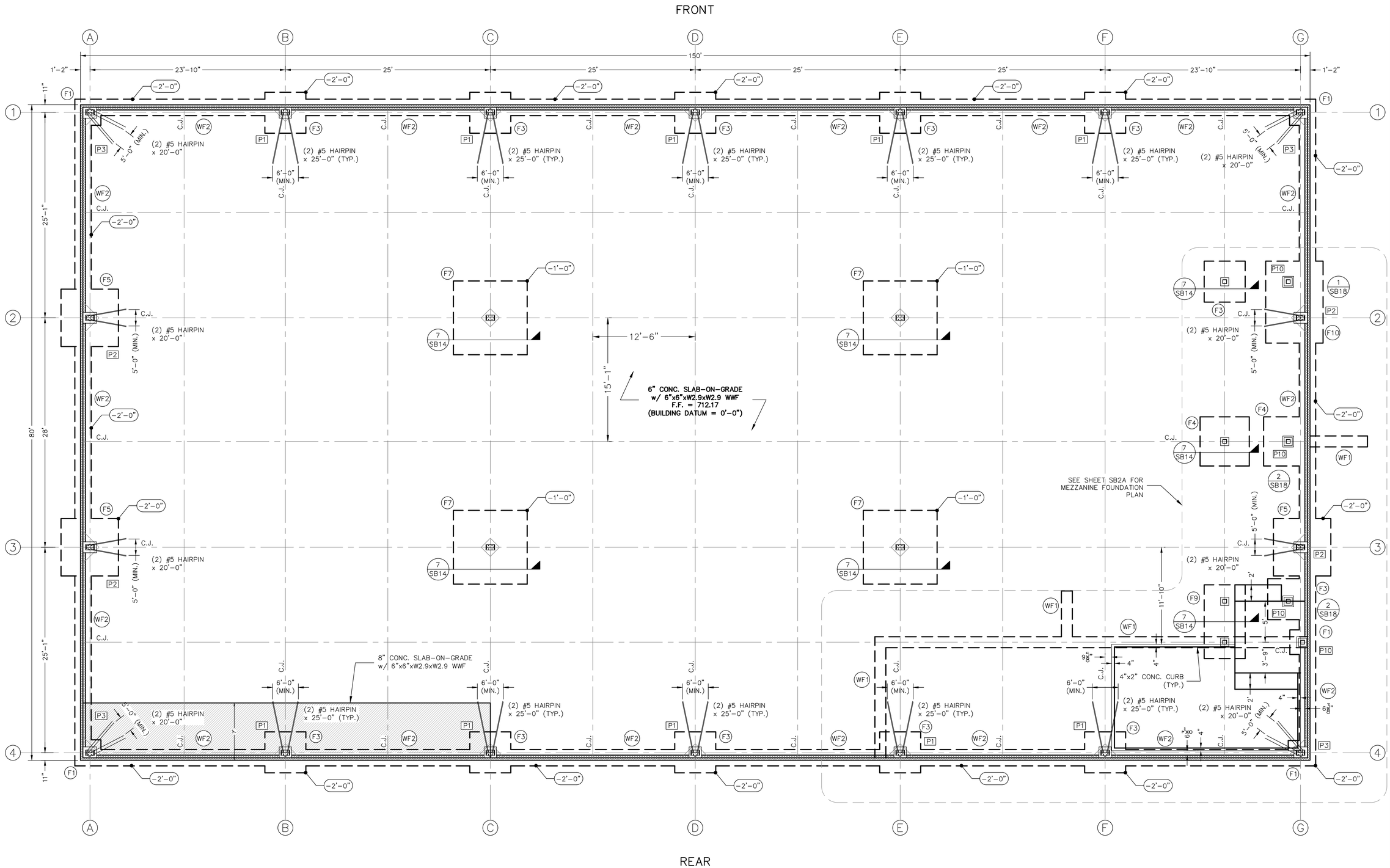

BUILDING #2: FOUNDATION PLAN

SCALE: 3/16"=1'-0"

PHASE 1 CONSTRUCTION

NORTH (Building)

Winchester Virginia

CITY YARDS MAINTENANCE FACILITY: RENOVATION AND ADDITIONS
301 EAST CORK ST.
WINCHESTER, VIRGINIA
22601

ARCHITECT:
GDA

Seal

PAINTER-LEWIS, P.L.C.
817 CEDAR CREEK GRADE, SUITE 120
WINCHESTER, VIRGINIA 22601
Telephone: (540) 662-5792
Facsimile: (540) 662-5793
Email: office@painterlewis.com

CONSULTING ENGINEERS

COMMONWEALTH OF VIRGINIA
TIMOTHY G. PAINTER
Lic. No. 018260
08/14/19
PROFESSIONAL ENGINEER

M.E.P. ENGINEERS:
CDi
Comfort Designs Inc.
620 Pennsylvania Avenue
Winchester, VA 22604
540 665-2846

Seal

ISSUE/REVISIONS:

DRAWING TITLE: CITY YARDS: BUILDING #2

SHEET TITLE: FOUNDATION PLAN

DATE:	AUGUST 5, 2019
PROJECT NO.:	1801014
SCALE:	3/16"=1'-0"
SHEET:	SB2

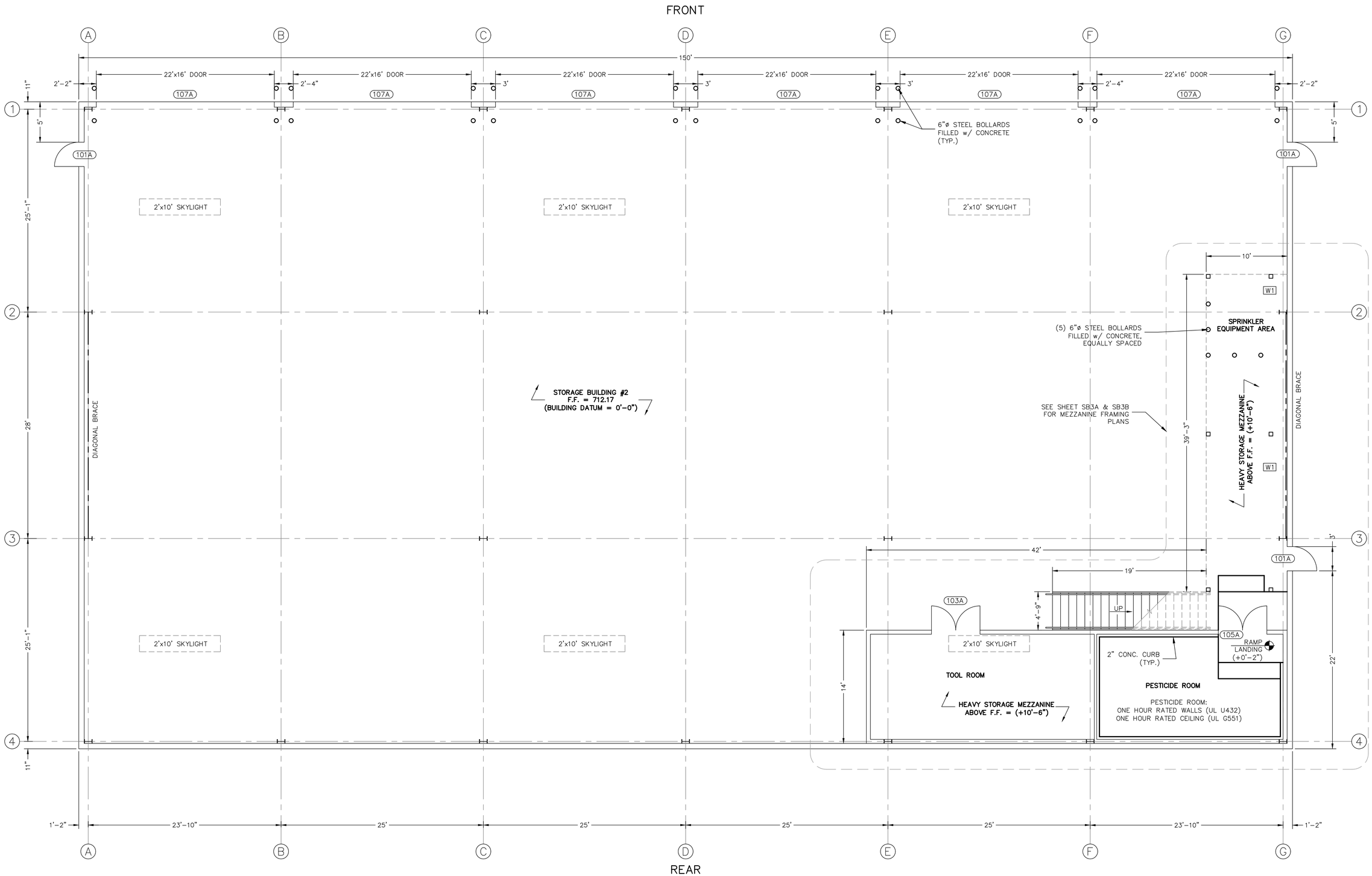

BUILDING #2: FLOOR PLAN

SCALE: $\frac{3}{16}$"=1'-0"

PHASE 1 CONSTRUCTION

NORTH (Building)

Winchester Virginia

CITY YARDS MAINTENANCE FACILITY: RENOVATION AND ADDITIONS
301 EAST CORK ST.
WINCHESTER, VIRGINIA 22601

ARCHITECT:

GDA

Seal

PAINTER-LEWIS, P.L.C.
CONSULTING ENGINEERS
817 CEDAR CREEK GRADE, SUITE 120
WINCHESTER, VIRGINIA 22601
Telephone: (540) 662-5792
Facsimile: (540) 662-5793
Email: office@painterlewis.com

COMMONWEALTH OF VIRGINIA
TIMOTHY G. PAINTER
Lic. No. 018260
08/14/19
PROFESSIONAL ENGINEER

M.E.P. ENGINEERS:

CDi

Comfort Designs Inc.
620 Pennsylvania Avenue
Winchester, VA 22604
540 665-2846

Seal

ISSUE/REVISIONS:

DRAWING TITLE: CITY YARDS: BUILDING #2

SHEET TITLE: FLOOR PLAN

DATE: AUGUST 5, 2019

PROJECT NO.: 1801014

SCALE: $\frac{3}{16}$"=1'-0"

SHEET: SB3

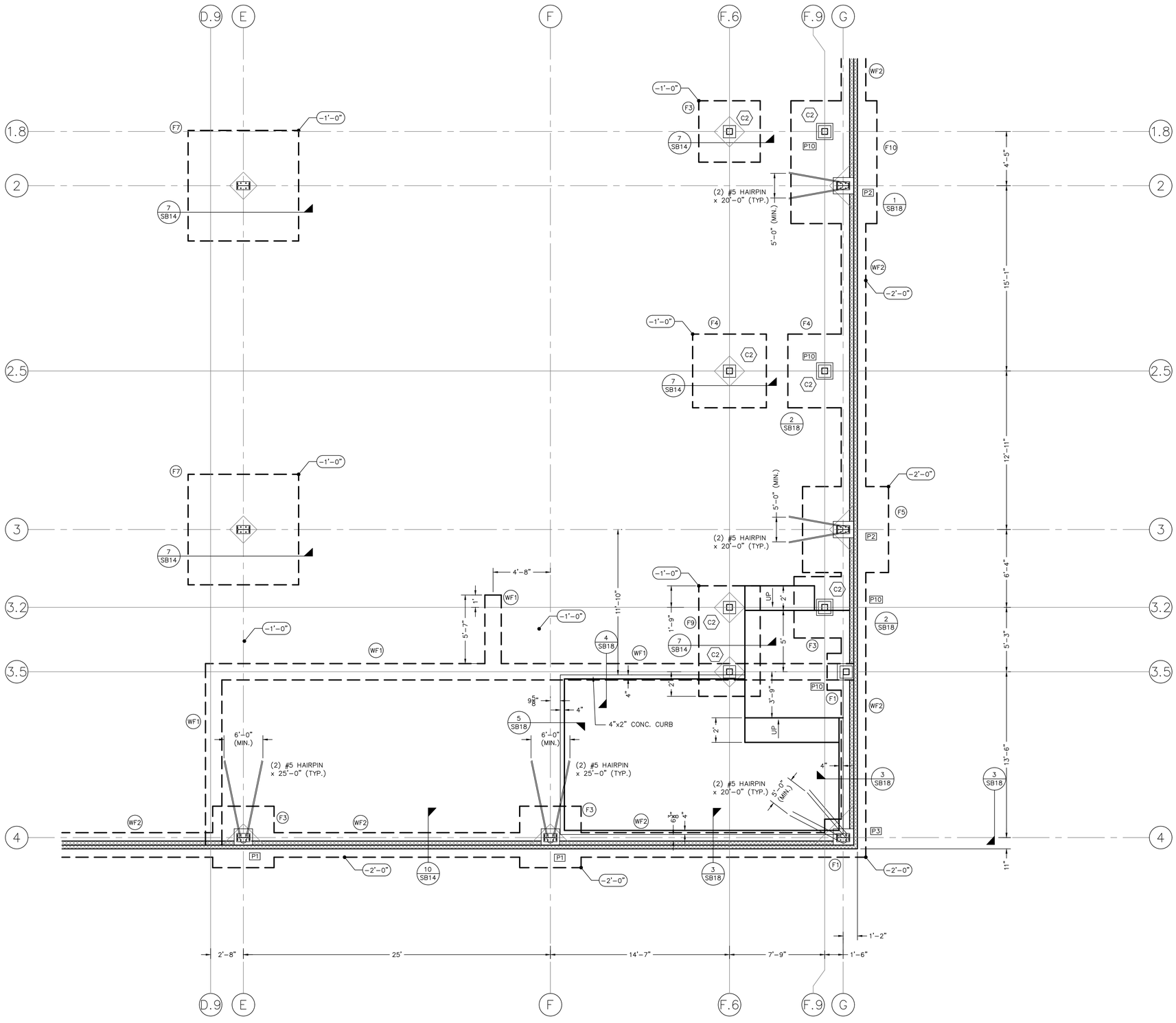

PHASE 1 CONSTRUCTION

NORTH (Building)

Winchester Virginia

CITY YARDS MAINTENANCE FACILITY: RENOVATION AND ADDITIONS

301 East Cork St.
Winchester, Virginia
22601

ARCHITECT:

GDA
Grove & Dell'Orfano Architects plc
Architecture
Planning
Interiors
Landscape
VA License #0
Elm Dell'Orfano • Scott R. Grove • Gary A. Dell'Orfano
121 Virginia Ave.
Gerrardstown, WV 25420
304.535.2727
13 West Boscawen Street
Winchester, VA 22601
540.771.2267

Seal

PAINTER-LEWIS, P.L.C.
817 CEDAR CREEK GRADE, SUITE 120
WINCHESTER, VIRGINIA 22601
Telephone: (540) 662-5792
Facsimile: (540) 662-5793
Email: office@painterlewis.com
CONSULTING ENGINEERS

COMMONWEALTH OF VIRGINIA
TIMOTHY G. PAINTER
Lic. No. 018260
08/14/19
PROFESSIONAL ENGINEER

M.E.P. ENGINEERS:

CDi
Comfort Designs Inc.
620 Pennsylvania Avenue
Winchester, VA 22604
540 665-2846

Seal

ISSUE/REVISIONS:

DRAWING TITLE:
CITY YARDS:
BUILDING #2

SHEET TITLE:
MEZZANINE
FOUNDATION PLAN

DATE: AUGUST 5, 2019

PROJECT NO.: 1801014

SCALE: 1/4"=1'-0"

SHEET:
SB2A

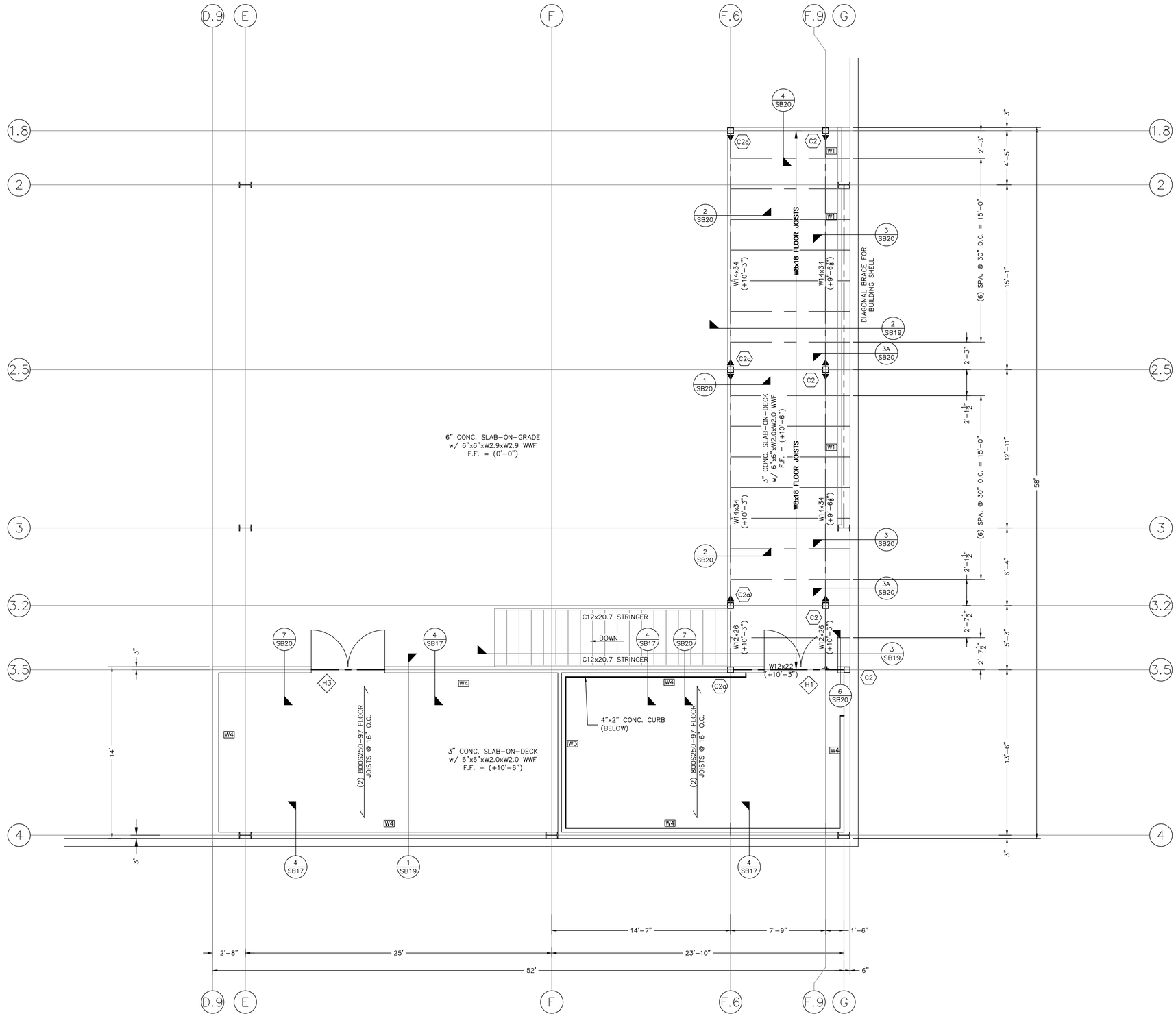

PHASE 1 CONSTRUCTION

NORTH (Building)

Winchester Virginia

CITY YARDS MAINTENANCE FACILITY: RENOVATION AND ADDITIONS

301 East Cork St.
Winchester, Virginia
22601

ARCHITECT:

GDA

Seal

PAINTER-LEWIS, P.L.C.
CONSULTING ENGINEERS
817 CEDAR CREEK GRADE, SUITE 120
WINCHESTER, VIRGINIA 22601
Telephone: (540) 662-5792
Facsimile: (540) 662-5793
Email: office@painterlewis.com

COMMONWEALTH OF VIRGINIA
TIMOTHY G. PAINTER
Lic. No. 018260
08/14/19
PROFESSIONAL ENGINEER

M.E.P. ENGINEERS:

CDi
Comfort Designs Inc.
620 Pennsylvania Avenue
Winchester, VA 22604
540 665-2846

Seal

ISSUE/REVISIONS:

DRAWING TITLE: CITY YARDS: BUILDING #2

SHEET TITLE: MEZZANINE FRAMING PLAN

DATE: AUGUST 5, 2019

PROJECT NO.: 1801014

SCALE: 1/4"=1'-0"

SHEET: SB3A

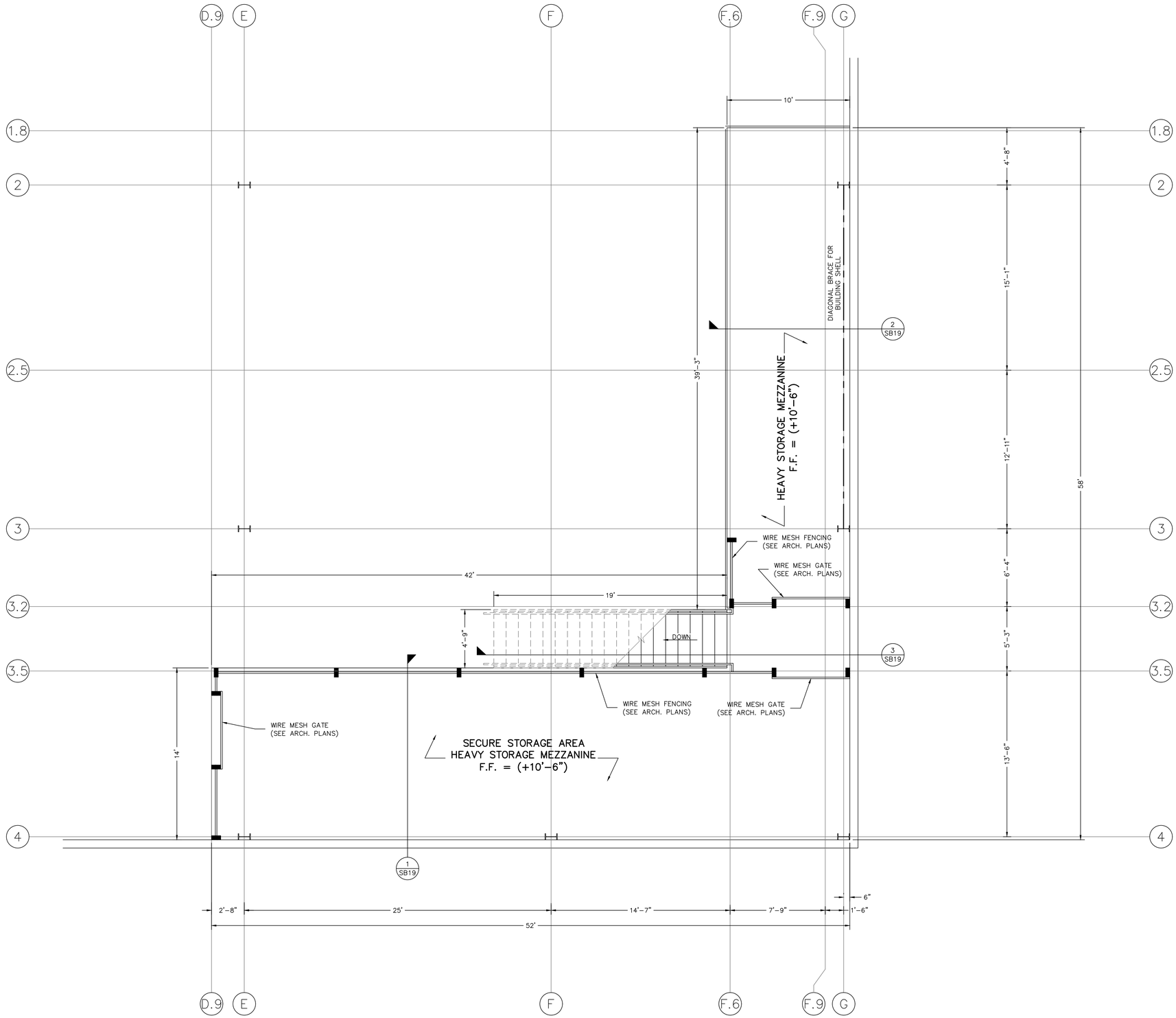

PHASE 1 CONSTRUCTION

NORTH (Building)

Winchester Virginia

CITY YARDS MAINTENANCE FACILITY: RENOVATION AND ADDITIONS
301 EAST CORK ST.
WINCHESTER, VIRGINIA
22601

ARCHITECT:

GDA

Seal

PAINTER-LEWIS, P.L.C.
CONSULTING ENGINEERS
817 CEDAR CREEK GRADE, SUITE 120
WINCHESTER, VIRGINIA 22601
Telephone: (540) 662-5792
Facsimile: (540) 662-5793
Email: office@painterlewis.com

COMMONWEALTH OF VIRGINIA
TIMOTHY G. PAINTER
Lic. No. 018260
08/14/19
PROFESSIONAL ENGINEER

M.E.P. ENGINEERS:

CDi

Comfort Designs Inc.
620 Pennsylvania Avenue
Winchester, VA 22604
540 665-2846

Seal

ISSUE/REVISIONS:

DRAWING TITLE:
CITY YARDS: BUILDING #2

SHEET TITLE:
MEZZANINE FLOOR PLAN

DATE: AUGUST 5, 2019

PROJECT NO.: 1801014

SCALE: 1/4"=1'-0"

SHEET: SB3B

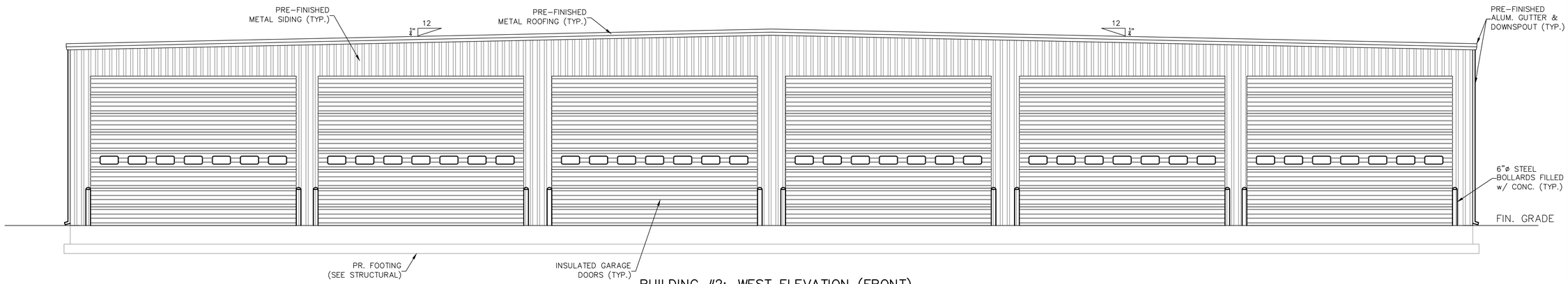

BUILDING #2: WEST ELEVATION (FRONT)

SCALE: 3/16"=1'-0"

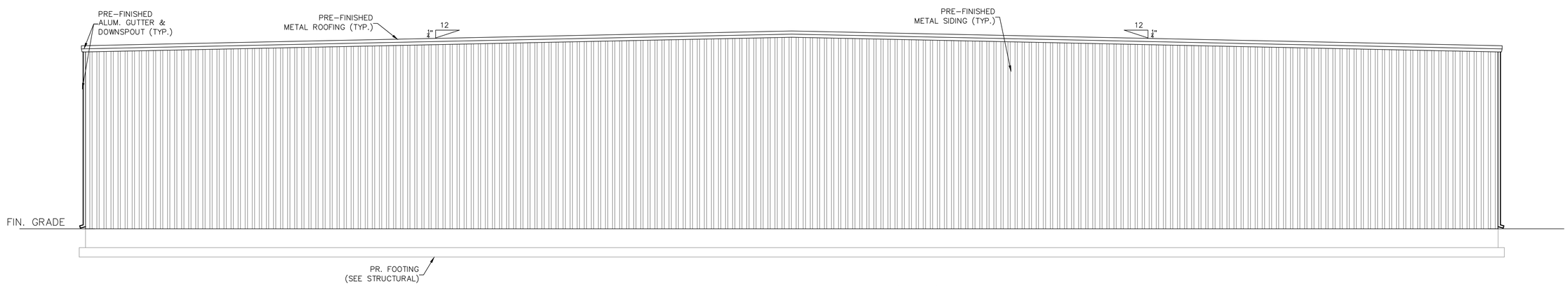

BUILDING #2: EAST ELEVATION (REAR)

SCALE: 3/16"=1'-0"

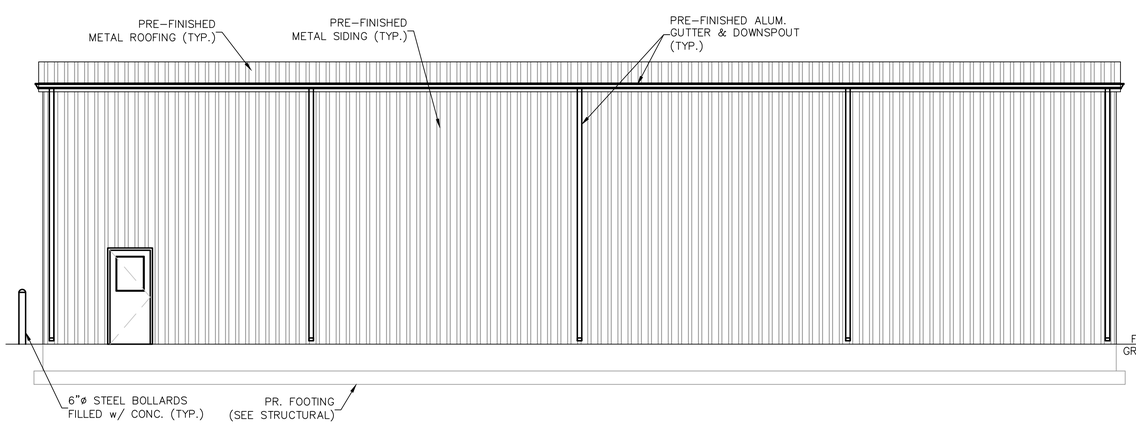

BUILDING #2: SOUTH ELEVATION (SIDE)

SCALE: 3/16"=1'-0"

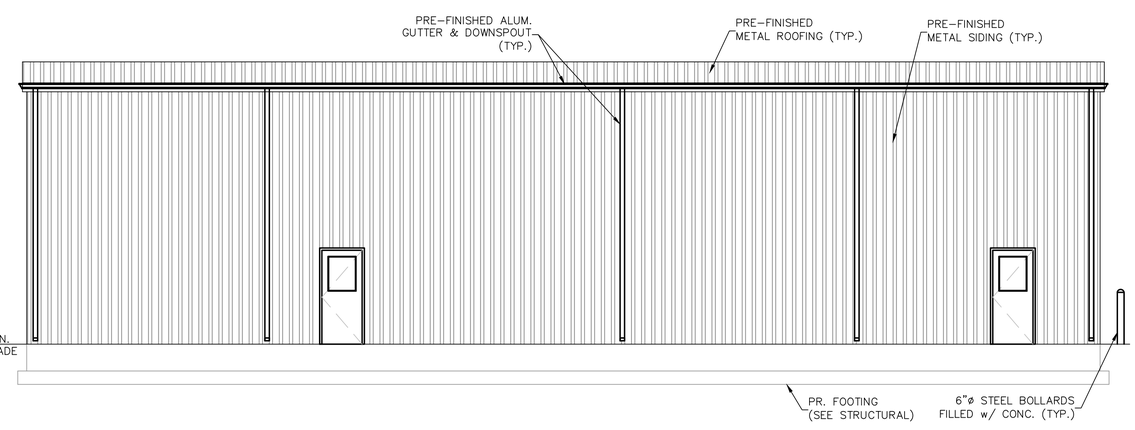

BUILDING #2: NORTH ELEVATION (SIDE)

SCALE: 3/16"=1'-0"

PHASE 1 CONSTRUCTION

NORTH (Building)

Winchester Virginia

CITY YARDS MAINTENANCE FACILITY: RENOVATION AND ADDITIONS
301 EAST CORK ST.
WINCHESTER, VIRGINIA
22601

ARCHITECT:

GDA

Seal

PAINTER-LEWIS, P.L.C.
817 CEDAR CREEK GRADE, SUITE 120
WINCHESTER, VIRGINIA 22601
Telephone: (540) 662-5792
Facsimile: (540) 662-5793
Email: office@painterlewis.com
CONSULTING ENGINEERS

COMMONWEALTH OF VIRGINIA
TIMOTHY G. PAINTER
Lic. No. 018260
08/14/19
PROFESSIONAL ENGINEER

M.E.P. ENGINEERS:
CDi
Comfort Designs Inc.
620 Pennsylvania Avenue
Winchester, VA 22604
540 665-2846

Seal

ISSUE/REVISIONS:

DRAWING TITLE: CITY YARDS: BUILDING #2

SHEET TITLE: ELEVATIONS

DATE: AUGUST 5, 2019
PROJECT NO.: 1801014
SCALE: 3/16"=1'-0"
SHEET: SB4

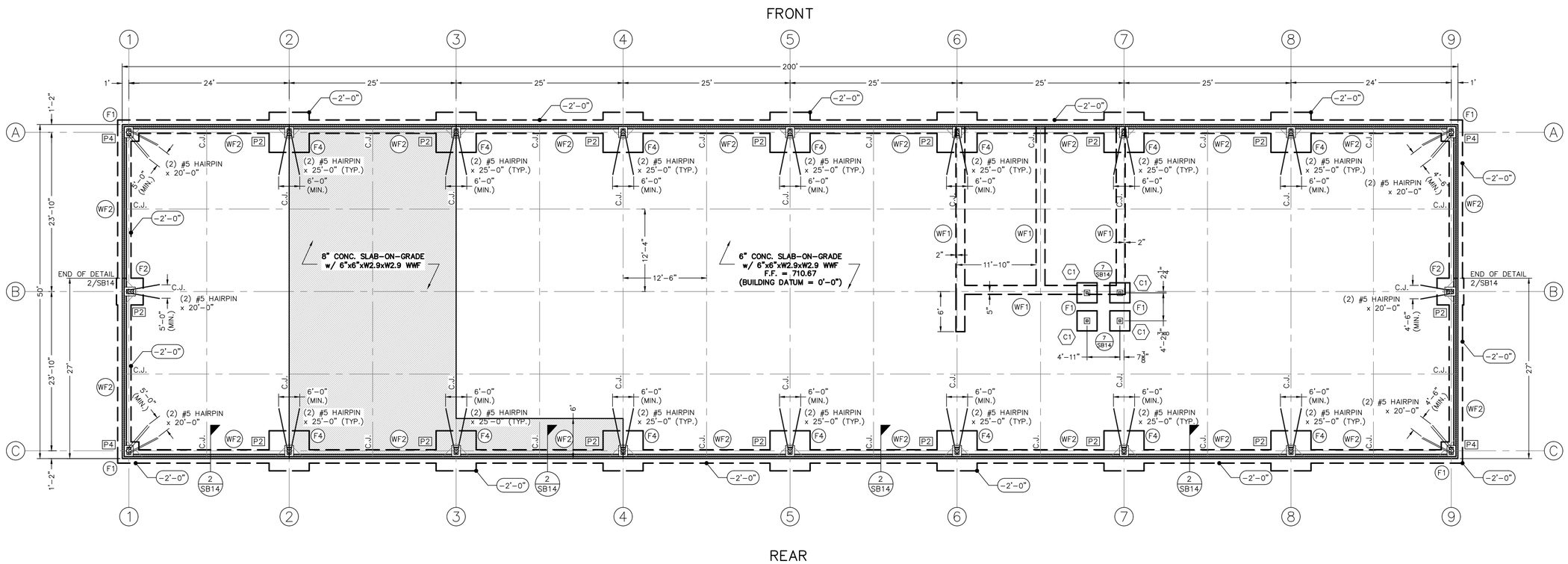

BUILDING #3: FOUNDATION PLAN

SCALE: 1/8"=1'-0"

PHASE 1 CONSTRUCTION

NORTH (Building)

Winchester Virginia

CITY YARDS MAINTENANCE FACILITY: RENOVATION AND ADDITIONS
301 EAST CORK ST.
WINCHESTER, VIRGINIA 22601

ARCHITECT:

GDA

PAINTER-LEWIS, P.L.C.
817 CEDAR CREEK GRADE, SUITE 120
WINCHESTER, VIRGINIA 22601
Telephone: (540) 662-5792
Facsimile: (540) 662-5793
Email: office@painterlewis.com
CONSULTING ENGINEERS

Seal

COMMONWEALTH OF VIRGINIA
TIMOTHY G. PAINTER
Lic. No. 018260
08/14/19
PROFESSIONAL ENGINEER

M.E.P. ENGINEERS:

CDi

Comfort Designs Inc.
620 Pennsylvania Avenue
Winchester, VA 22604
540 665-2846

Seal

ISSUE/REVISIONS:

DRAWING TITLE: CITY YARDS: BUILDING #3

SHEET TITLE: FOUNDATION PLAN

DATE: AUGUST 5, 2019

PROJECT NO.: 1801014

SCALE: 1/8"=1'-0"

SHEET: SB5

FRONT

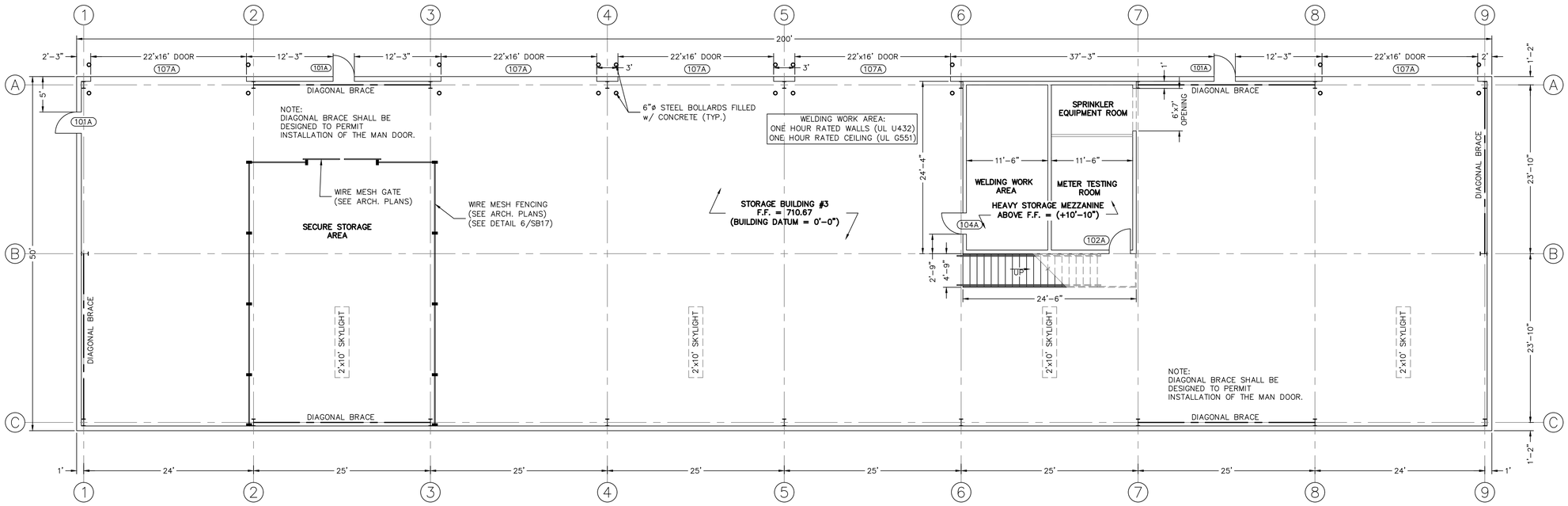

REAR

BUILDING #3: FLOOR PLAN

SCALE: $\frac{1}{8}$"=1'-0"

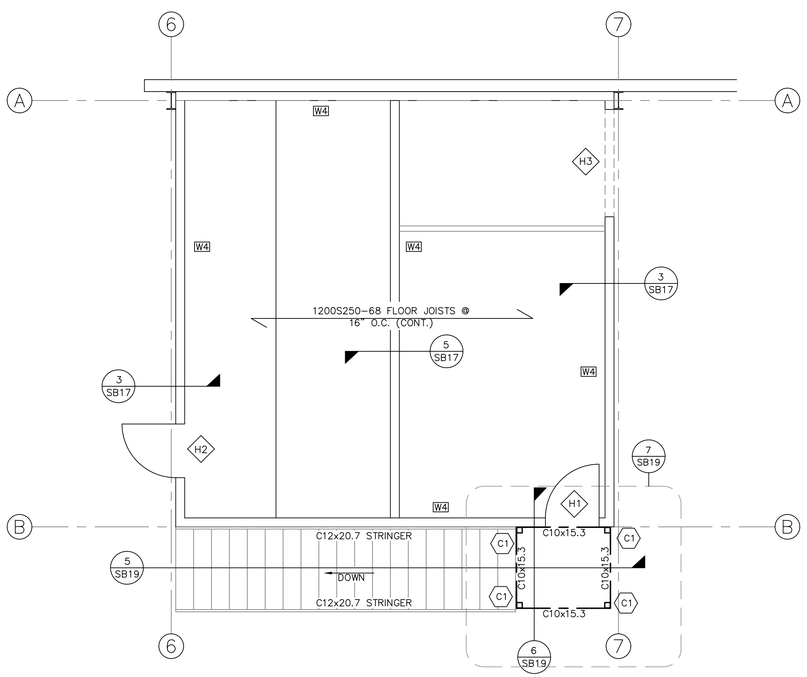

BUILDING #3: MEZZANINE FLOOR FRAMING PLAN

SCALE: $\frac{1}{8}$"=1'-0"

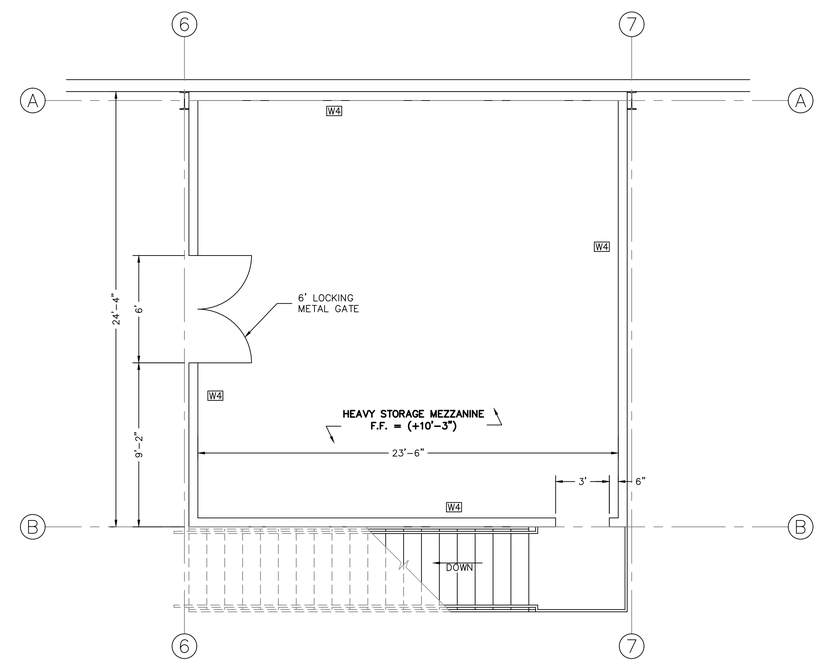

BUILDING #3: MEZZANINE FLOOR PLAN

SCALE: $\frac{1}{8}$"=1'-0"

PHASE 1 CONSTRUCTION

NORTH (Building)

Winchester Virginia

CITY YARDS MAINTENANCE FACILITY: RENOVATION AND ADDITIONS
301 East Cork St.
Winchester, Virginia 22601

ARCHITECT:

GDA

Seal

PAINTER-LEWIS, P.L.C.
CONSULTING ENGINEERS
817 CEDAR CREEK GRADE, SUITE 120
WINCHESTER, VIRGINIA 22601
Telephone: (540) 662-5792
Facsimile: (540) 662-5793
Email: office@painterlewis.com

COMMONWEALTH OF VIRGINIA
TIMOTHY G. PAINTER
Lic. No. 018260
08/14/19
PROFESSIONAL ENGINEER

M.E.P. ENGINEERS:

CDi
Comfort Designs Inc.
620 Pennsylvania Avenue
Winchester, VA 22604
540 665-2846

Seal

ISSUE/REVISIONS:

DRAWING TITLE: CITY YARDS: BUILDING #3

SHEET TITLE: FLOOR PLAN

DATE:	AUGUST 5, 2019
PROJECT NO.:	1801014
SCALE:	AS NOTED
SHEET:	SB6

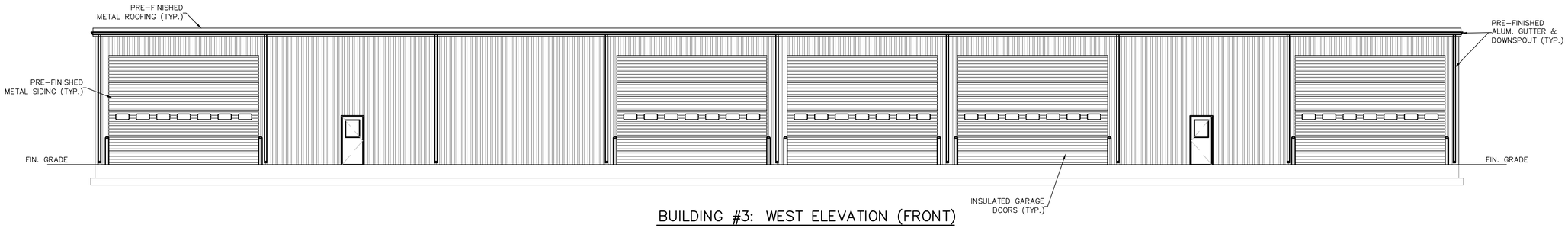

BUILDING #3: WEST ELEVATION (FRONT)

SCALE: $\frac{1}{8}$"=1'-0"

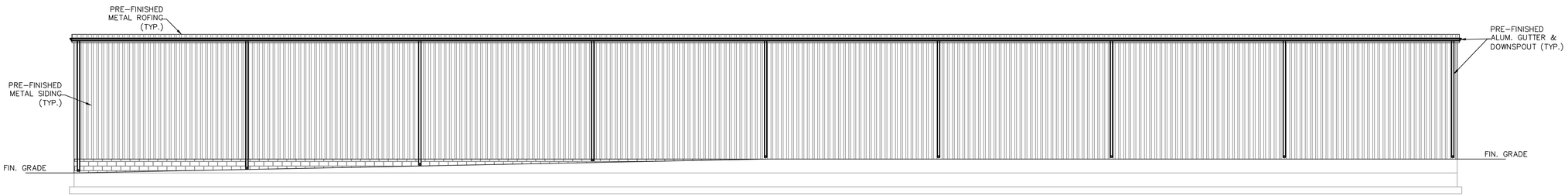

BUILDING #3: EAST ELEVATION (REAR)

SCALE: $\frac{1}{8}$"=1'-0"

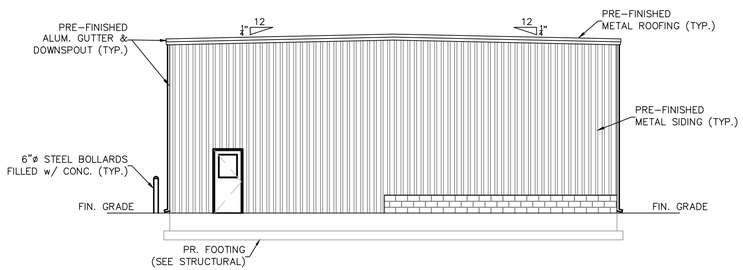

BUILDING #3: SOUTH ELEVATION (SIDE)

SCALE: $\frac{1}{8}$"=1'-0"

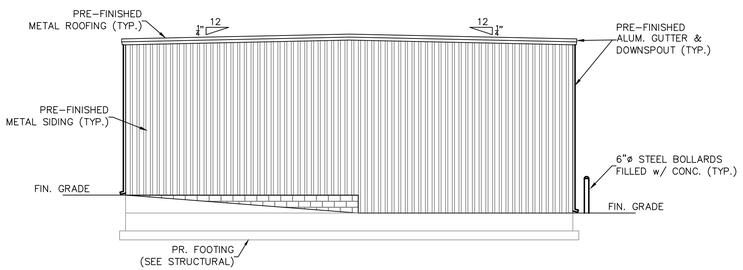

BUILDING #3: NORTH ELEVATION (SIDE)

SCALE: $\frac{1}{8}$"=1'-0"

PHASE 1 CONSTRUCTION

NORTH (Building)

Winchester Virginia

CITY YARDS MAINTENANCE FACILITY: RENOVATION AND ADDITIONS
301 East Cork St.
Winchester, Virginia
22601

ARCHITECT:

GDA

Seal

PAINTER-LEWIS, P.L.C.
817 CEDAR CREEK GRADE, SUITE 120
WINCHESTER, VIRGINIA 22601
Telephone: (540) 662-5792
Facsimile: (540) 662-5793
Email: office@painterlewis.com
CONSULTING ENGINEERS

COMMONWEALTH OF VIRGINIA
TIMOTHY G. PAINTER
Lic. No. 018260
08/14/19
PROFESSIONAL ENGINEER

M.E.P. ENGINEERS:

CDi

Comfort Designs Inc.
620 Pennsylvania Avenue
Winchester, VA 22604
540 665-2846

Seal

ISSUE/REVISIONS:

DRAWING TITLE:
CITY YARDS: BUILDING #3

SHEET TITLE:
ELEVATIONS

DATE: AUGUST 5, 2019
PROJECT NO.: 1801014
SCALE: $\frac{1}{8}$"=1'-0"
SHEET: SB7

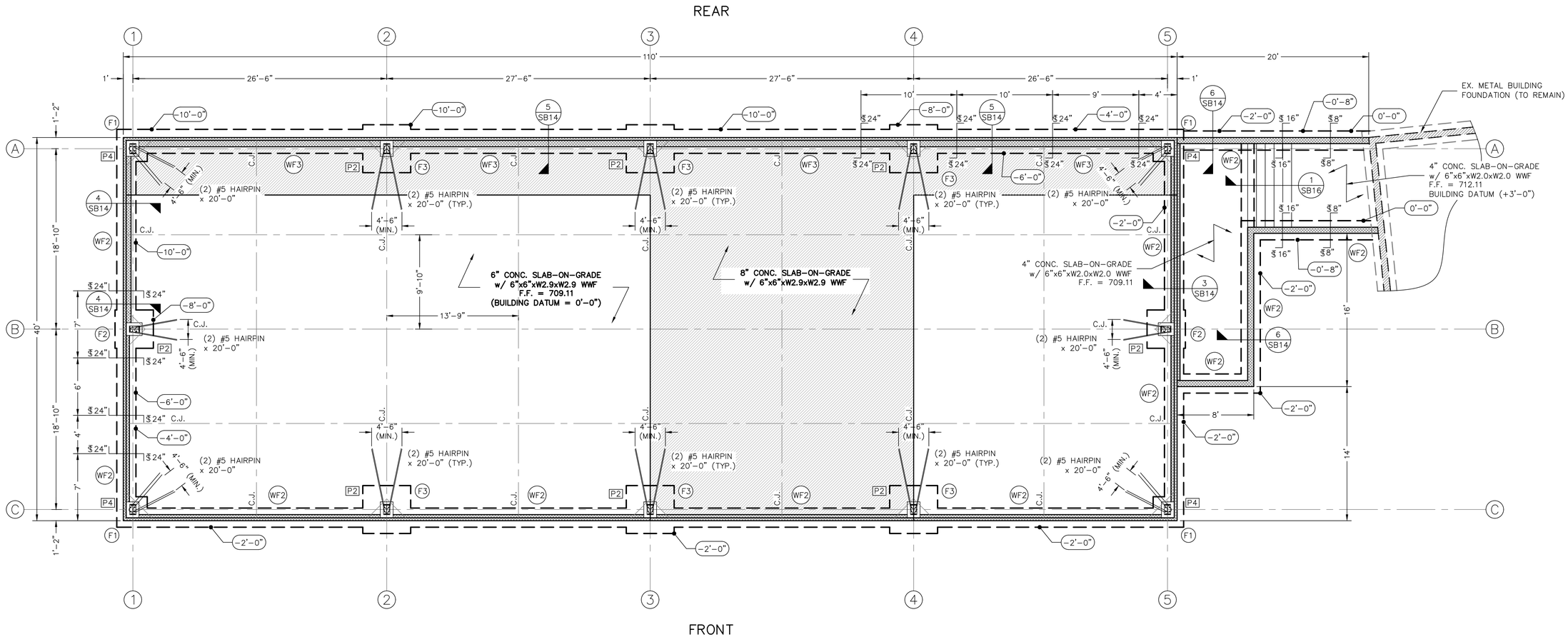

BUILDING #6: FOUNDATION PLAN

SCALE: $\frac{3}{16}$"=1'-0"

PHASE 1 CONSTRUCTION

NORTH (Building)

Winchester Virginia

CITY YARDS MAINTENANCE FACILITY: RENOVATION AND ADDITIONS
301 East Cork St.
Winchester, Virginia
22601

ARCHITECT:

GDA

Seal

PAINTER-LEWIS, P.L.C.
CONSULTING ENGINEERS
817 CEDAR CREEK GRADE, SUITE 120
WINCHESTER, VIRGINIA 22601
Telephone: (540) 662-5792
Facsimile: (540) 662-5793
Email: office@painterlewis.com

COMMONWEALTH OF VIRGINIA
TIMOTHY G. PAINTER
Lic. No. 018260
08/14/19
PROFESSIONAL ENGINEER

M.E.P. ENGINEERS:

CDi
Comfort Designs Inc.
620 Pennsylvania Avenue
Winchester, VA 22604
540 665-2846

Seal

ISSUE/REVISIONS:

DRAWING TITLE: 6CITY YARDS: BUILDING #6

SHEET TITLE: FOUNDATION PLAN

DATE: AUGUST 5, 2019

PROJECT NO.: 1801014

SCALE: $\frac{3}{16}$"=1'-0"

SHEET: SB8

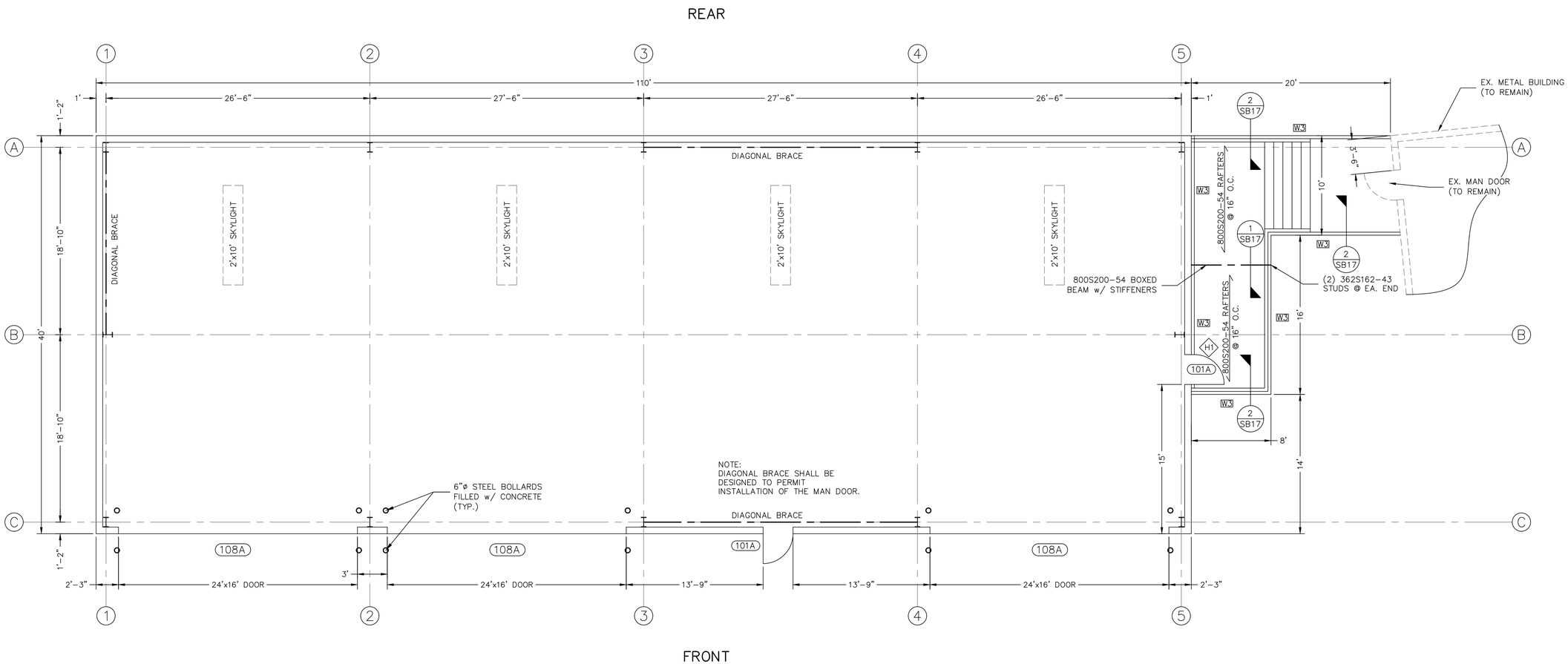

BUILDING #6: FLOOR PLAN

SCALE: $\frac{3}{16}$"=1'-0"

PHASE 1 CONSTRUCTION

NORTH (Building)

Winchester Virginia

CITY YARDS MAINTENANCE FACILITY: RENOVATION AND ADDITIONS
301 East Cork St.
Winchester, Virginia
22601

ARCHITECT:

GDA

Seal

PAINTER-LEWIS, P.L.C.
CONSULTING ENGINEERS
817 CEDAR CREEK GRADE, SUITE 120
WINCHESTER, VIRGINIA 22601
Telephone: (540) 662-5792
Facsimile: (540) 662-5793
Email: office@painterlewis.com

COMMONWEALTH OF VIRGINIA
TIMOTHY G. PAINTER
Lic. No. 018260
08/14/19
PROFESSIONAL ENGINEER

M.E.P. ENGINEERS:

CDi
Comfort Designs Inc.
620 Pennsylvania Avenue
Winchester, VA 22604
540 665-2846

Seal

ISSUE/REVISIONS:

DRAWING TITLE: CITY YARDS: BUILDING #6

SHEET TITLE: FLOOR PLAN

DATE:	AUGUST 5, 2019
PROJECT NO.:	1801014
SCALE:	$\frac{3}{16}$"=1'-0"
SHEET:	SB9

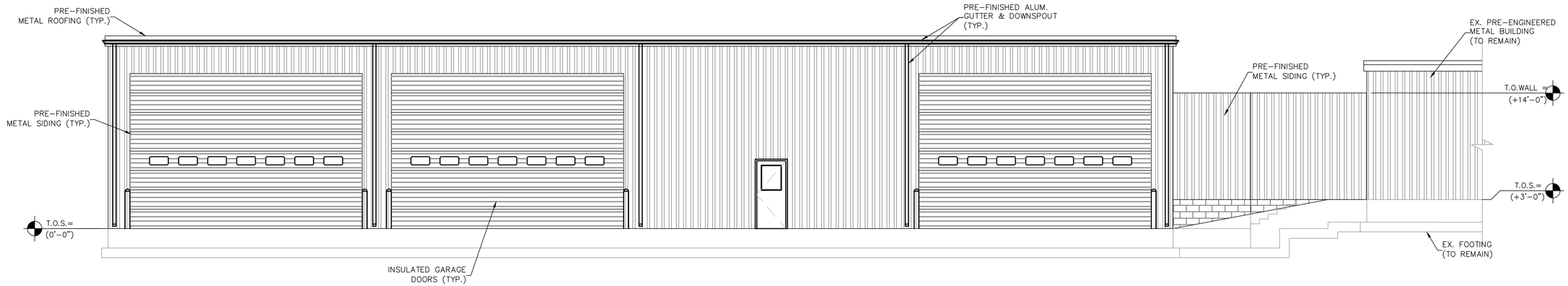

BUILDING #6: EAST ELEVATION (FRONT)

SCALE: $\frac{3}{16}$"=1'-0"

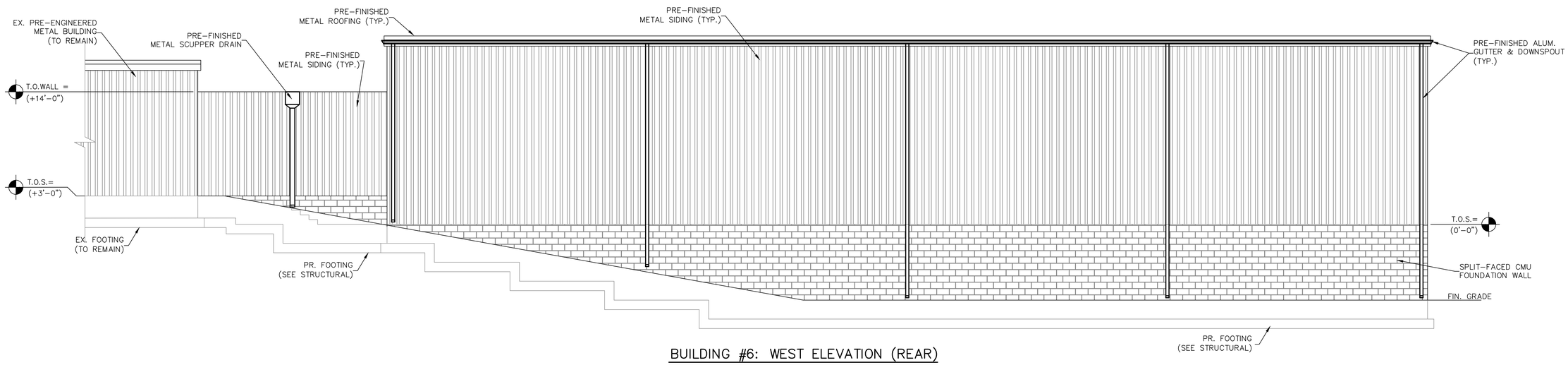

BUILDING #6: WEST ELEVATION (REAR)

SCALE: $\frac{3}{16}$"=1'-0"

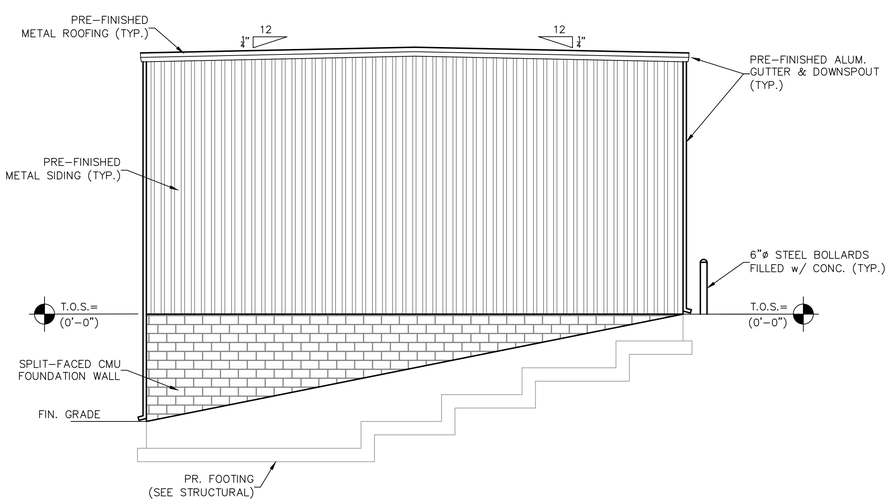

BUILDING #6: SOUTH ELEVATION (SIDE)

SCALE: $\frac{3}{16}$"=1'-0"

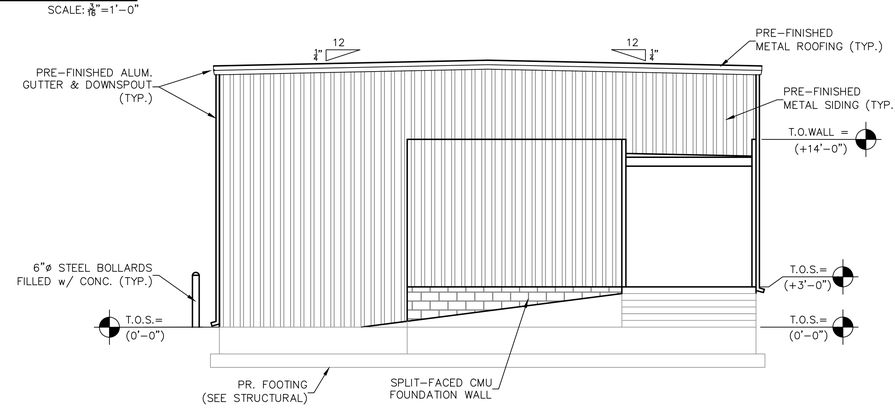

BUILDING #6: NORTH ELEVATION (SIDE)

SCALE: $\frac{3}{16}$"=1'-0"

PHASE 1 CONSTRUCTION

NORTH (Building)

Winchester Virginia

CITY YARDS MAINTENANCE FACILITY: RENOVATION AND ADDITIONS
301 EAST CORK ST.
WINCHESTER, VIRGINIA
22601

ARCHITECT:

GDA

Seal

PAINTER-LEWIS, P.L.C.
817 CEDAR CREEK GRADE, SUITE 120
WINCHESTER, VIRGINIA 22601
Telephone: (540) 662-5792
Facsimile: (540) 662-5793
Email: office@painterlewis.com
CONSULTING ENGINEERS

COMMONWEALTH OF VIRGINIA
TIMOTHY G. PAINTER
Lic. No. 018260
08/14/19
PROFESSIONAL ENGINEER

M.E.P. ENGINEERS:
CDi
Comfort Designs Inc.
620 Pennsylvania Avenue
Winchester, VA 22604
540 665-2846

Seal

ISSUE/REVISIONS:

DRAWING TITLE: CITY YARDS: BUILDING #6

SHEET TITLE: ELEVATIONS

DATE:	AUGUST 5, 2019
PROJECT NO.:	1801014
SCALE:	$\frac{3}{16}$"=1'-0"
SHEET:	SB10

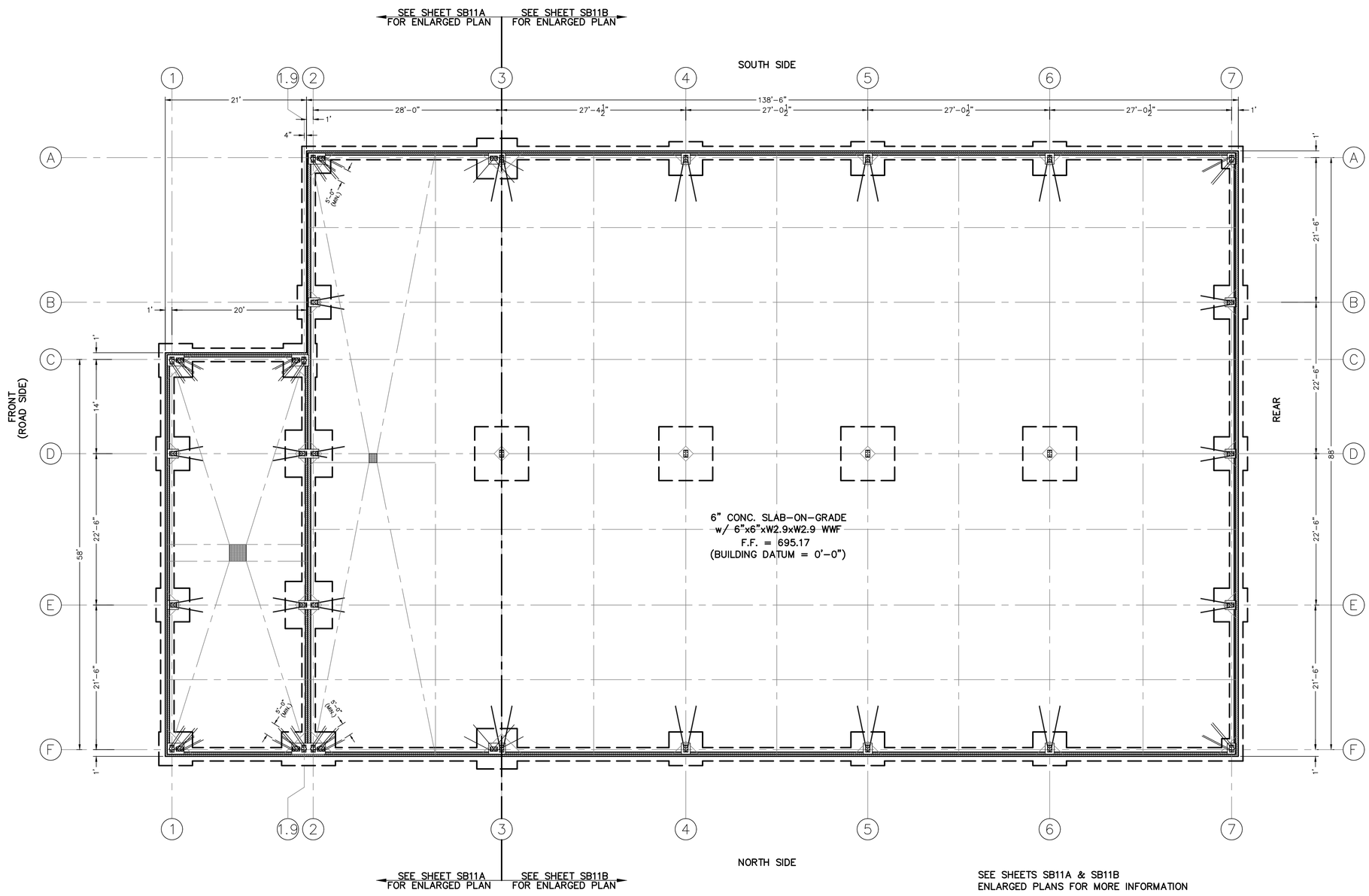

BUILDING #7&#9: FOUNDATION PLAN

SCALE: $\frac{1}{8}$"=1'-0"

PHASE 2 CONSTRUCTION

NORTH (Building)

Winchester Virginia

CITY YARDS MAINTENANCE FACILITY: RENOVATION AND ADDITIONS
301 EAST CORK ST.
WINCHESTER, VIRGINIA
22601

ARCHITECT:

GDA

Seal

PAINTER-LEWIS, P.L.C.
817 CEDAR CREEK GRADE, SUITE 120
WINCHESTER, VIRGINIA 22601
Telephone: (540) 662-5792
Facsimile: (540) 662-5793
Email: office@painterlewis.com
CONSULTING ENGINEERS

COMMONWEALTH OF VIRGINIA
TIMOTHY G. PAINTER
Lic. No. 018260
08/14/19
PROFESSIONAL ENGINEER

M.E.P. ENGINEERS:

CDi

Comfort Designs Inc.
620 Pennsylvania Avenue
Winchester, VA 22604
540 665-2846

Seal

ISSUE/REVISIONS:

DRAWING TITLE: CITY YARDS: BUILDING #7 & #9

SHEET TITLE: FOUNDATION PLAN

DATE: AUGUST 5, 2019

PROJECT NO.: 1801014

SCALE: $\frac{1}{8}$"=1'-0"

SHEET: SB11

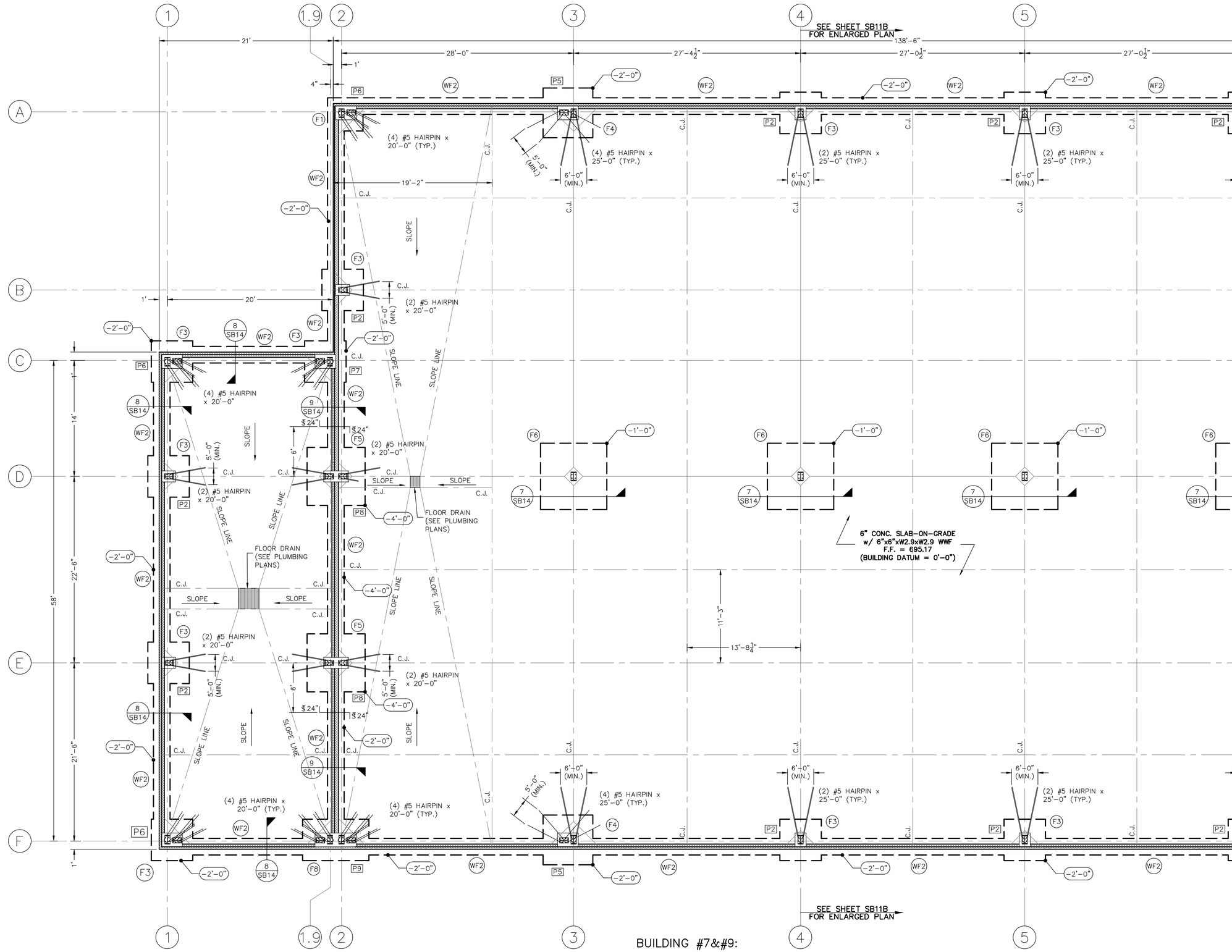

BUILDING #7&#9:
PARTIAL FOUNDATION PLAN

SCALE: 3/16"=1'-0"

PHASE 2 CONSTRUCTION

NORTH (Building)

Winchester Virginia

CITY YARDS MAINTENANCE FACILITY: RENOVATION AND ADDITIONS
301 EAST CORK ST.
WINCHESTER, VIRGINIA 22601

ARCHITECT:

GDA

Seal

PAINTER-LEWIS, P.L.C.
817 CEDAR CREEK GRADE, SUITE 120
WINCHESTER, VIRGINIA 22601
Telephone: (540) 662-5792
Facsimile: (540) 662-5793
Email: office@painterlewis.com
CONSULTING ENGINEERS

COMMONWEALTH OF VIRGINIA
TIMOTHY G. PAINTER
Lic. No. 018260
08/14/19
PROFESSIONAL ENGINEER

M.E.P. ENGINEERS:
CDi
Comfort Designs Inc.
620 Pennsylvania Avenue
Winchester, VA 22604
540 665-2846

Seal

ISSUE/REVISIONS:

DRAWING TITLE: CITY YARDS: BUILDING #7&#9

SHEET TITLE: PARTIAL FOUNDATION PLAN

DATE: AUGUST 5, 2019

PROJECT NO.: 1801014

SCALE: 3/16"=1'-0"

SHEET: SB11A

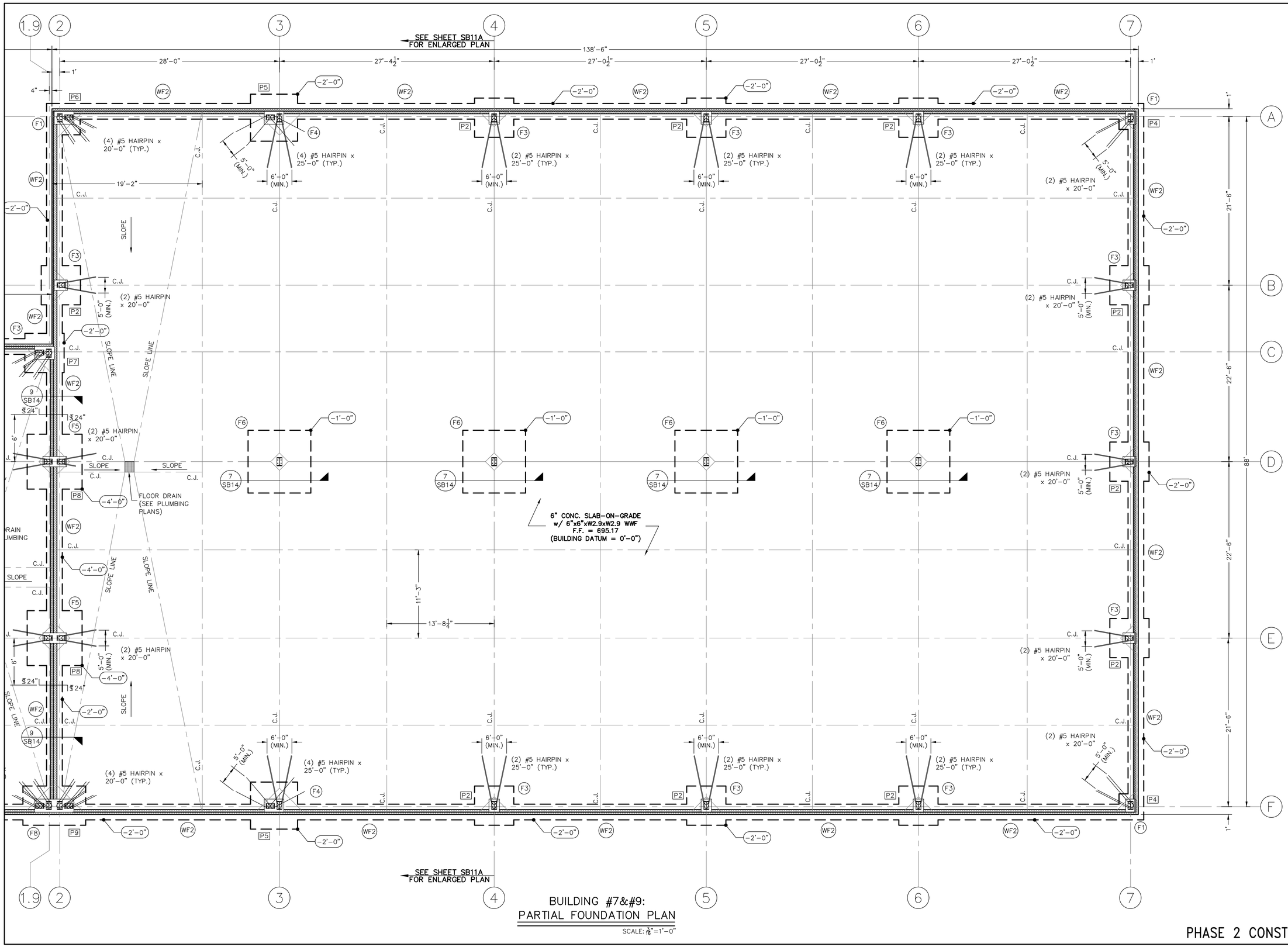

BUILDING #7&#9:
PARTIAL FOUNDATION PLAN

SCALE: 1/16"=1'-0"

PHASE 2 CONSTRUCTION

NORTH (Building)

Winchester Virginia

CITY YARDS MAINTENANCE FACILITY: RENOVATION AND ADDITIONS
301 East Cork St.
Winchester, Virginia 22601

ARCHITECT:
GDA

Seal

PAINTER-LEWIS, P.L.C.
CONSULTING ENGINEERS
817 CEDAR CREEK GRADE, SUITE 120
WINCHESTER, VIRGINIA 22601
Telephone: (540) 662-5792
Facsimile: (540) 662-5793
Email: office@painterlewis.com

COMMONWEALTH OF VIRGINIA
TIMOTHY G. PAINTER
Lic. No. 018260
08/14/19
PROFESSIONAL ENGINEER

M.E.P. ENGINEERS:
CDi
Comfort Designs Inc.
620 Pennsylvania Avenue
Winchester, VA 22604
540 665-2846

Seal

ISSUE/REVISIONS:

DRAWING TITLE:
CITY YARDS: BUILDING #7&#9

SHEET TITLE:
PARTIAL FOUNDATION PLAN

DATE: AUGUST 5, 2019
PROJECT NO.: 1801014
SCALE: 1/16"=1'-0"
SHEET: SB11B

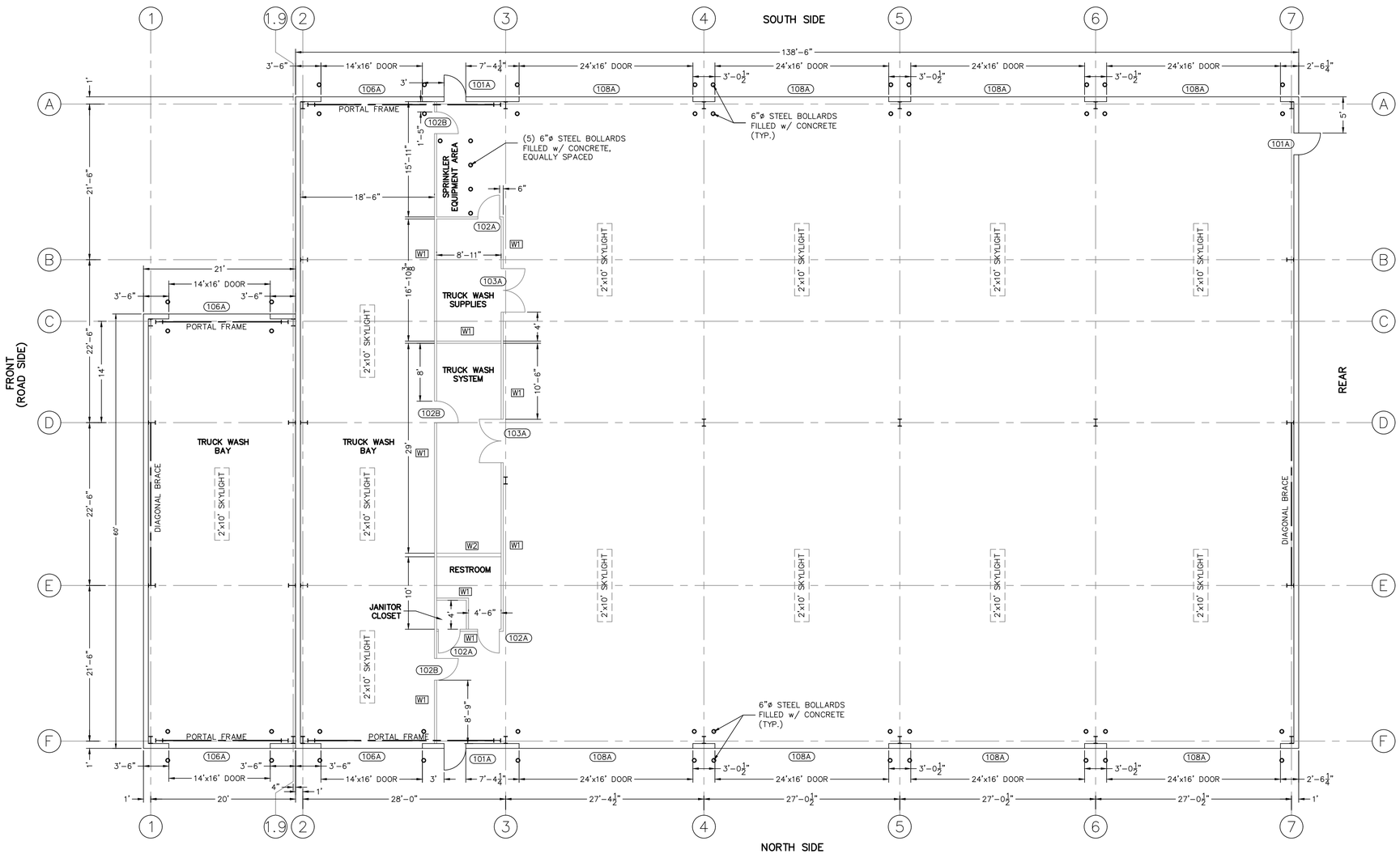

BUILDING #7&#9: FLOOR PLAN

SCALE $\frac{1}{8}$"=1'-0"

PHASE 2 CONSTRUCTION

NORTH (Building)

Winchester Virginia

CITY YARDS MAINTENANCE FACILITY: RENOVATION AND ADDITIONS
301 EAST CORK ST.
WINCHESTER, VIRGINIA 22601

ARCHITECT:
GDA

Seal

PAINTER-LEWIS, P.L.C.
817 CEDAR CREEK GRADE, SUITE 120
WINCHESTER, VIRGINIA 22601
Telephone: (540) 662-5792
Facsimile: (540) 662-5793
Email: office@painterlewis.com
CONSULTING ENGINEERS

COMMONWEALTH OF VIRGINIA
TIMOTHY G. PAINTER
Lic. No. 018260
08/14/19
PROFESSIONAL ENGINEER

M.E.P. ENGINEERS:
CDi
Comfort Designs Inc.
620 Pennsylvania Avenue
Winchester, VA 22604
540 665-2846

Seal

ISSUE/REVISIONS:

DRAWING TITLE: CITY YARDS: BUILDING #7&#9

SHEET TITLE: FLOOR PLAN

DATE: AUGUST 5, 2019

PROJECT NO.: 1801014

SCALE: $\frac{1}{8}$"=1'-0"

SHEET: SB12

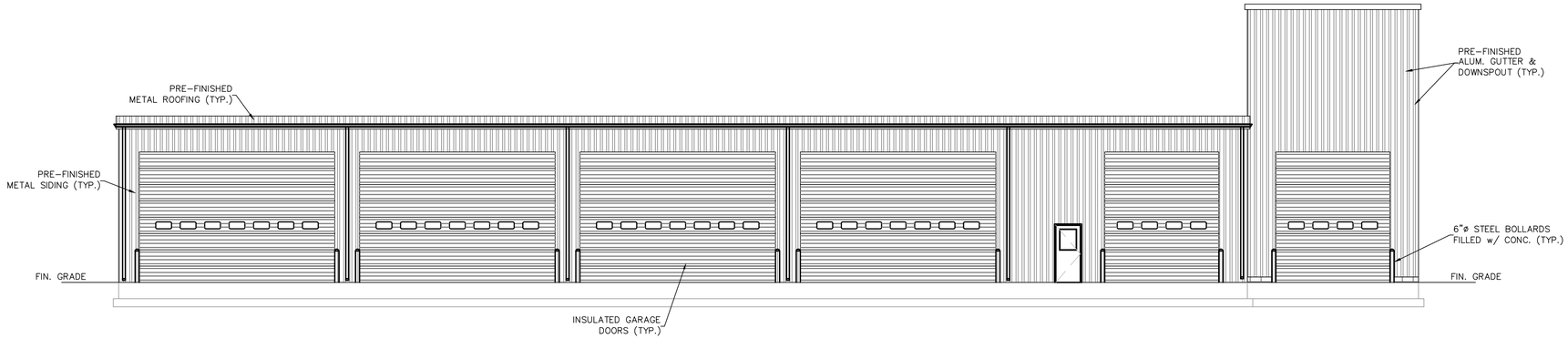

BUILDING #7&#9: SOUTH ELEVATION (SIDE)

SCALE: $\frac{1}{8}$"=1'-0"

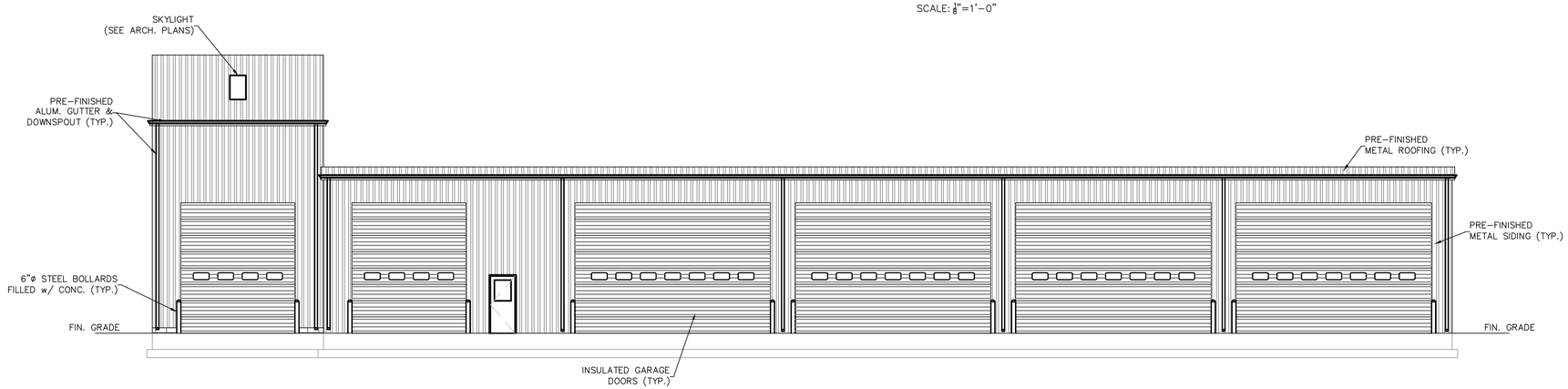

BUILDING #7&#9: NORTH ELEVATION (SIDE)

SCALE: $\frac{1}{8}$"=1'-0"

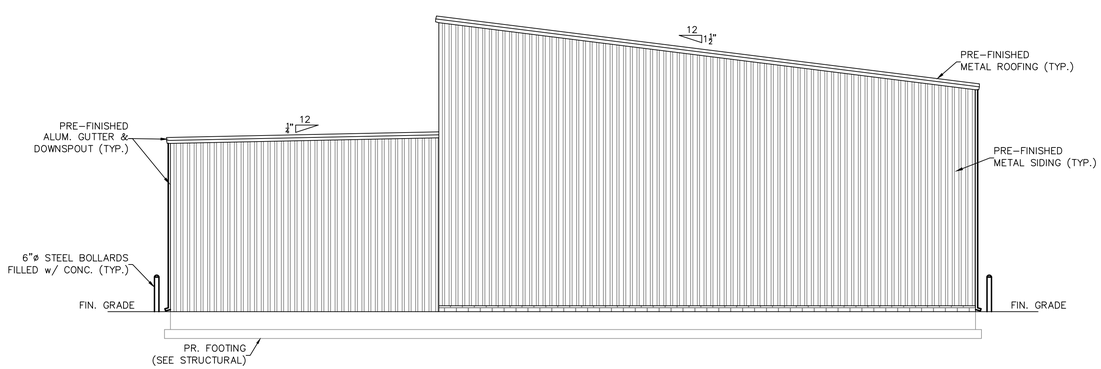

BUILDING #7&#9: EAST ELEVATION (FRONT)

SCALE: $\frac{1}{8}$"=1'-0"

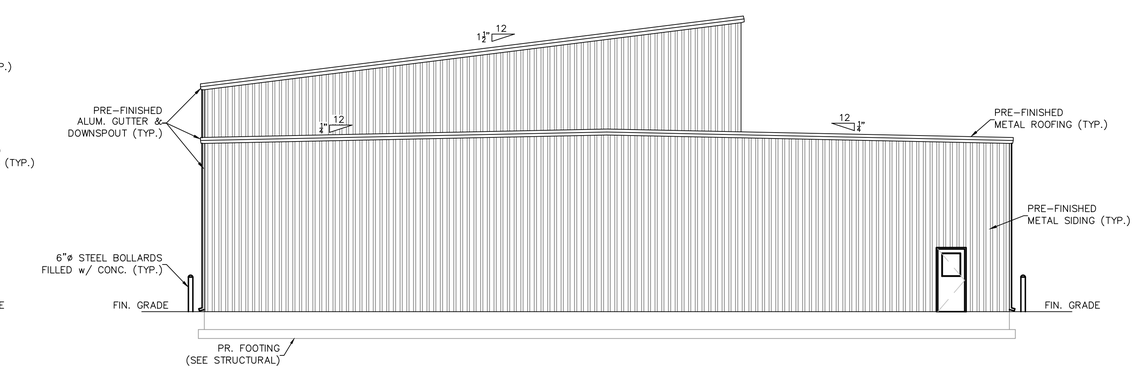

BUILDING #7&#9: WEST ELEVATION (REAR)

SCALE: $\frac{1}{8}$"=1'-0"

PHASE 2 CONSTRUCTION

NORTH (Building)

Winchester Virginia

CITY YARDS MAINTENANCE FACILITY: RENOVATION AND ADDITIONS
301 East Cork St.
Winchester, Virginia
22601

ARCHITECT:
GDA

Seal

PAINTER-LEWIS, P.L.C.
817 CEDAR CREEK GRADE, SUITE 120
WINCHESTER, VIRGINIA 22601
Telephone: (540) 662-5792
Facsimile: (540) 662-5793
Email: office@painterlewis.com
CONSULTING ENGINEERS

COMMONWEALTH OF VIRGINIA
TIMOTHY G. PAINTER
Lic. No. 018260
08/14/19
PROFESSIONAL ENGINEER

M.E.P. ENGINEERS:
CDi
Comfort Designs Inc.
620 Pennsylvania Avenue
Winchester, VA 22604
540 665-2846

Seal

ISSUE/REVISIONS:

DRAWING TITLE:
CITY YARDS:
BUILDING #7&#9

SHEET TITLE:
ELEVATIONS

DATE:	AUGUST 5, 2019
PROJECT NO.:	1801014
SCALE:	$\frac{1}{8}$"=1'-0"
SHEET:	SB13

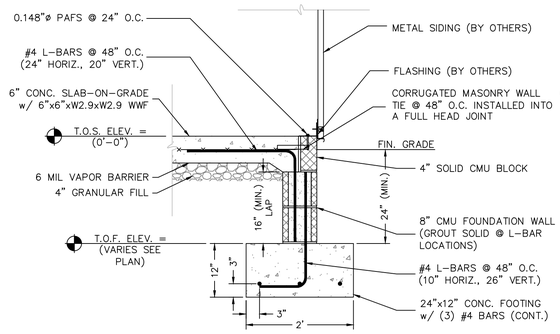

WF2 FOUNDATION WALL DETAIL

SCALE: 3/4" = 1'-0"

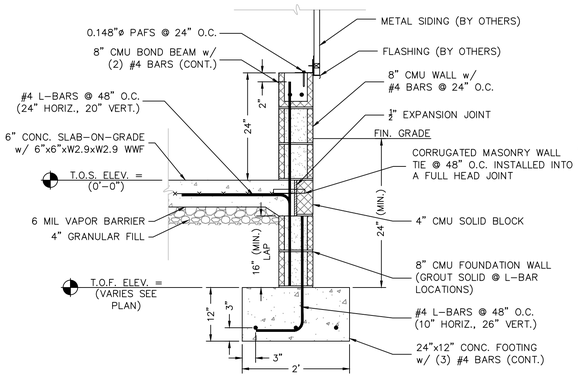

2 SB14 TYPICAL FOUNDATION WALL DETAIL

SCALE: 3/4" = 1'-0"

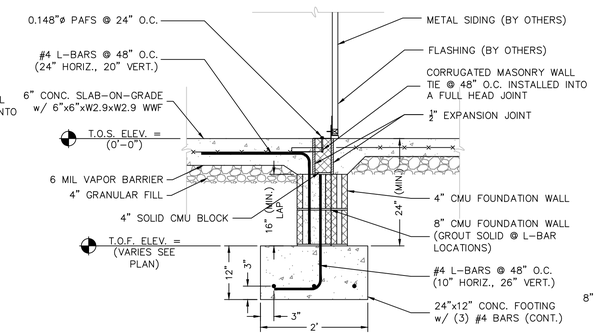

3 SB14 TYPICAL FOUNDATION WALL DETAIL

SCALE: 3/4" = 1'-0"

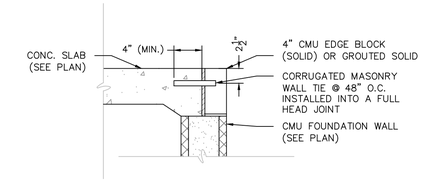

TYP. BLOCK CONNECTION DETAIL

SCALE: 1" = 1'-0"

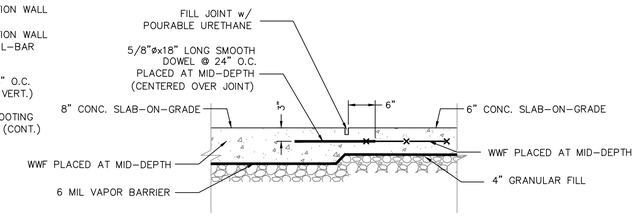

TYP. 8" TO 6" CONC. SLAB TRANSITION

SCALE 3/4" = 1'-0"

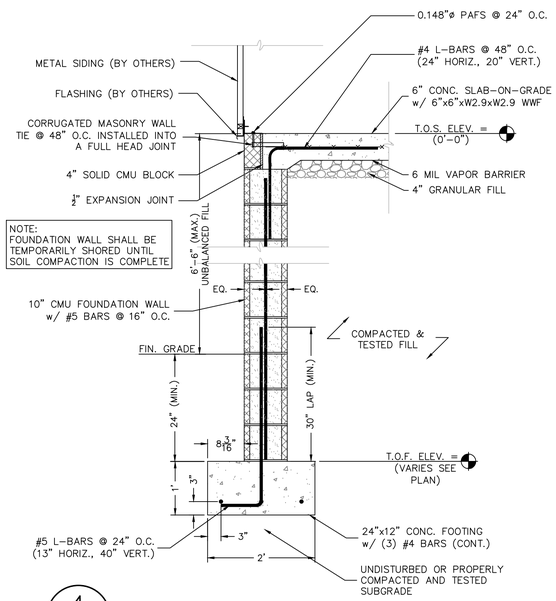

4 SB14 TYP. FOUNDATION WALL DETAIL

SCALE: 3/4" = 1'-0"

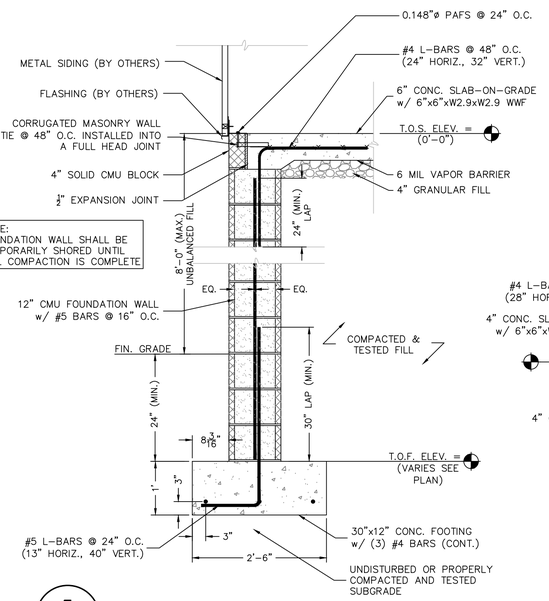

5 SB14 TYP. FOUNDATION WALL DETAIL

SCALE: 3/4" = 1'-0"

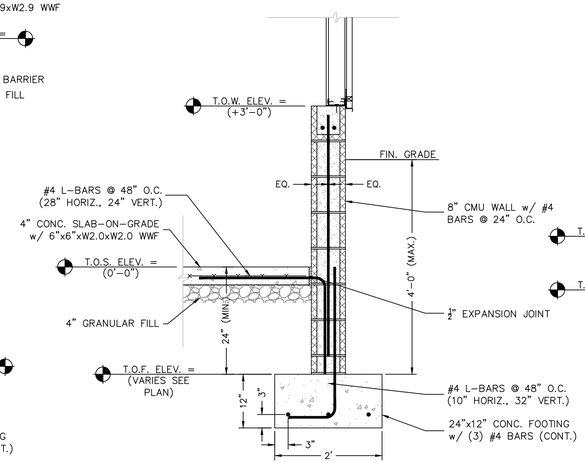

6 SB14 TYPICAL FOUNDATION WALL DETAIL

SCALE: 3/4" = 1'-0"

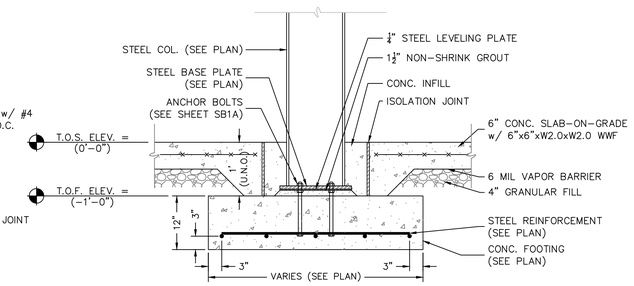

7 SB14 TYP. INTERIOR PIER FOOTING DETAIL

SCALE: 3/4" = 1'-0"

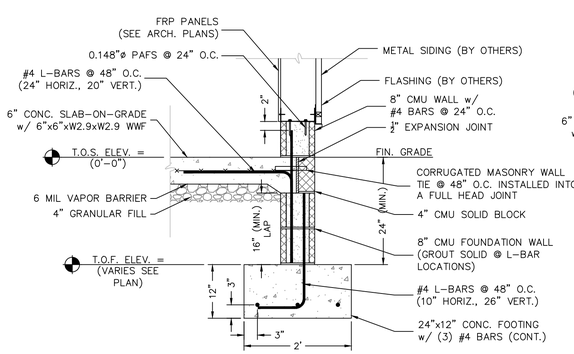

8 SB14 TYPICAL FOUNDATION WALL DETAIL

SCALE: 3/4" = 1'-0"

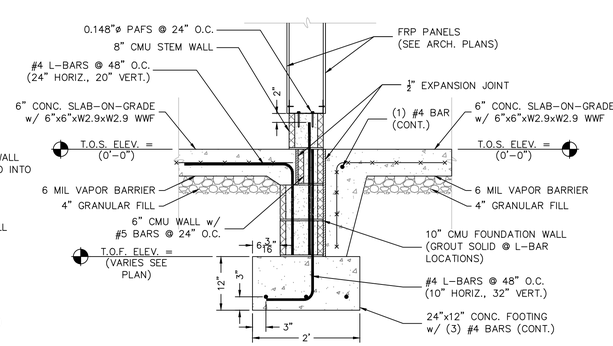

9 SB14 TYPICAL FOUNDATION WALL DETAIL

SCALE: 3/4" = 1'-0"

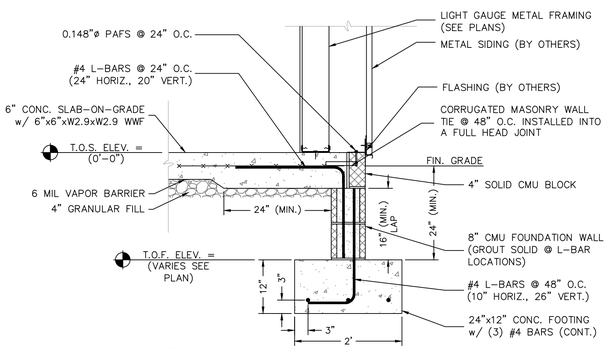

10 SB14 TYPICAL FOUNDATION WALL DETAIL

SCALE: 3/4" = 1'-0"

NORTH (Building)

Winchester Virginia

CITY YARDS MAINTENANCE FACILITY: RENOVATION AND ADDITIONS
301 EAST CORK ST.
WINCHESTER, VIRGINIA 22601

ARCHITECT:

GDA

Seal

PAINTER-LEWIS, P.L.C.
817 CEDAR CREEK GRADE, SUITE 120
WINCHESTER, VIRGINIA 22601
Telephone: (540) 662-5792
Facsimile: (540) 662-5793
Email: office@painterlewis.com

CONSULTING ENGINEERS

COMMONWEALTH OF VIRGINIA
TIMOTHY G. PAINTER
Lic. No. 018260
08/14/19
PROFESSIONAL ENGINEER

M.E.P. ENGINEERS:

CDi

Comfort Designs Inc.
620 Pennsylvania Avenue
Winchester, VA 22604
540 665-2846

Seal

ISSUE/REVISIONS:

DRAWING TITLE: CITY YARDS: BLDGS. 2,3,6,7 & 9

SHEET TITLE: FOUNDATION DETAILS

DATE: AUGUST 5, 2019

PROJECT NO.: 1801014

SCALE: AS NOTED

SHEET: SB14

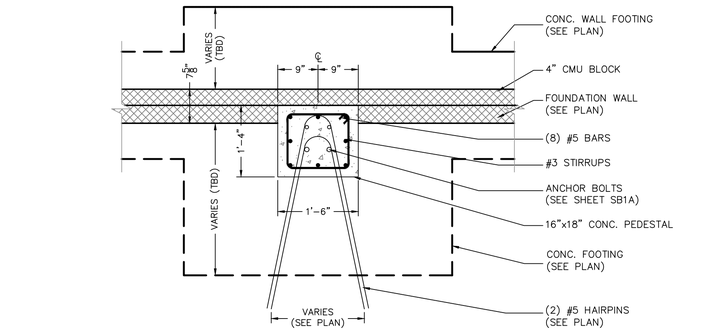

PLAN VIEW

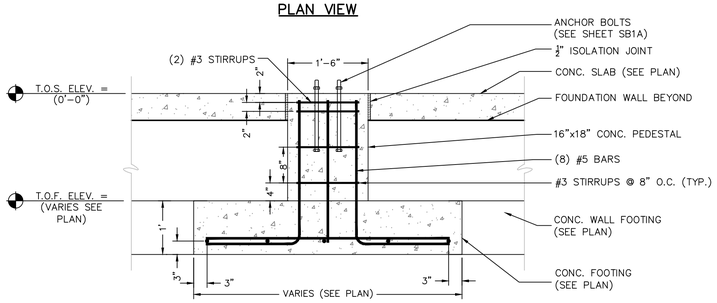

ELEVATION VIEW

CONCRETE PEDESTAL P1 DETAIL

SCALE: 3/4" = 1'-0"

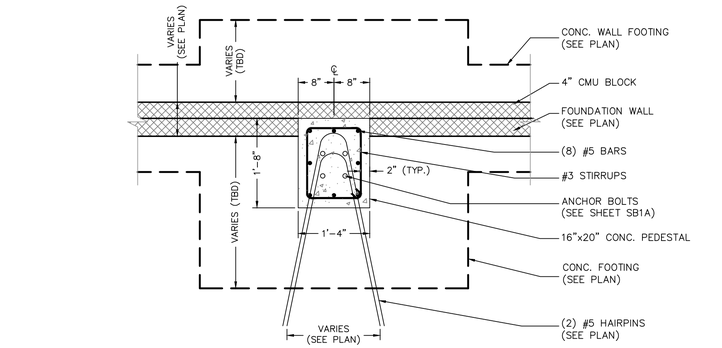

PLAN VIEW

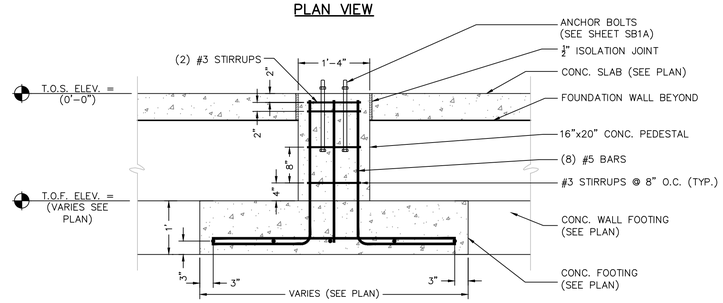

ELEVATION VIEW

CONCRETE PEDESTAL P2 DETAIL

SCALE: 3/4" = 1'-0"

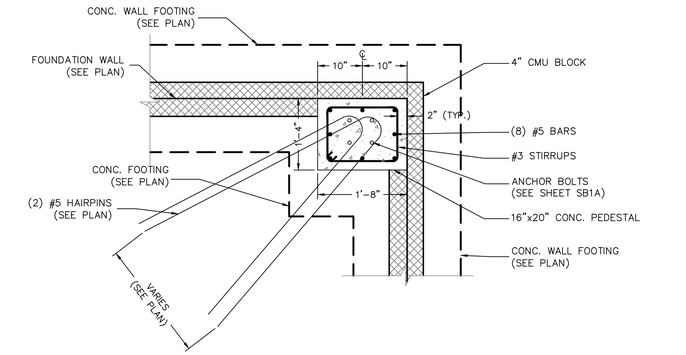

PLAN VIEW

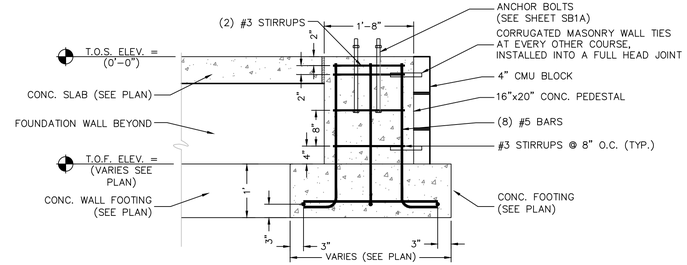

ELEVATION VIEW

CONCRETE PEDESTAL P3 DETAIL

SCALE: 3/4" = 1'-0"

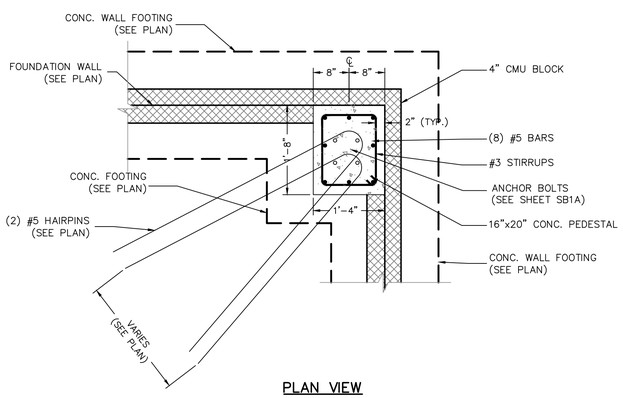

PLAN VIEW

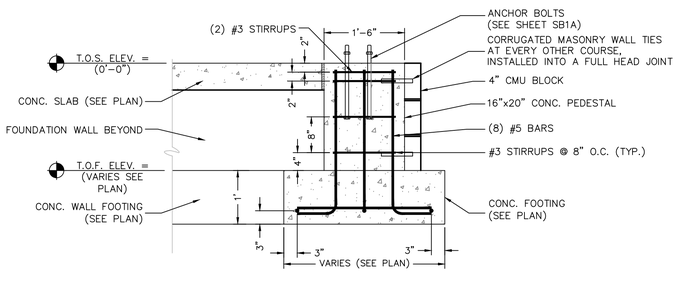

ELEVATION VIEW

CONCRETE PEDESTAL P4 DETAIL

SCALE: 3/4" = 1'-0"

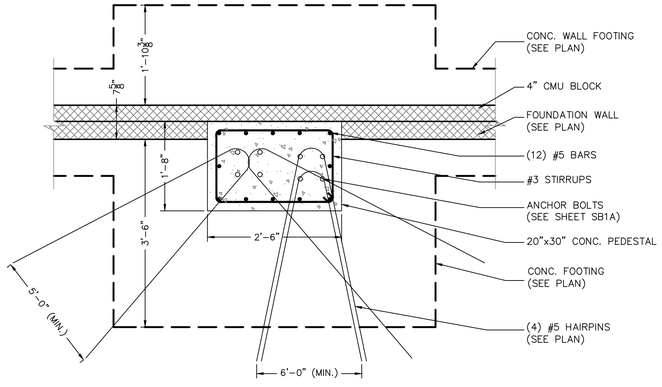

PLAN VIEW

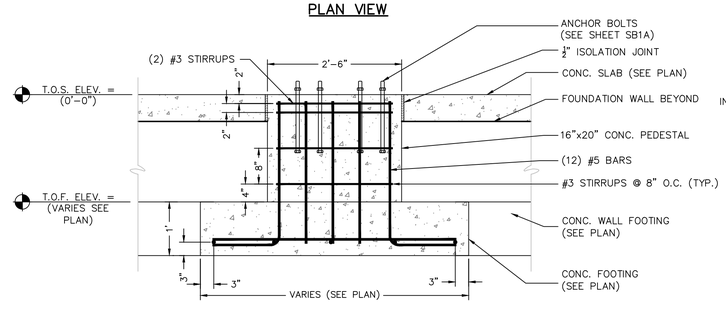

ELEVATION VIEW

CONCRETE PEDESTAL P5 DETAIL

SCALE: 3/4" = 1'-0"

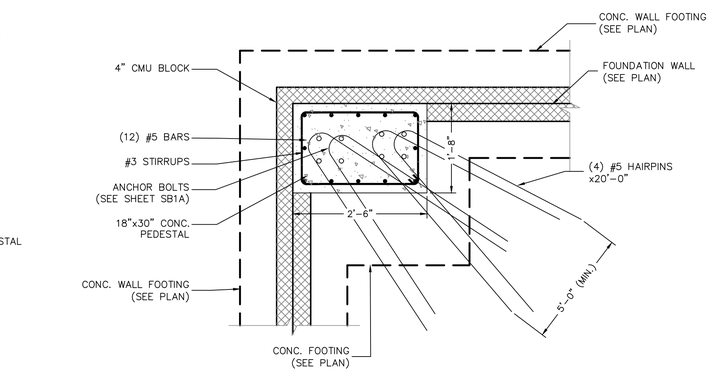

PLAN VIEW

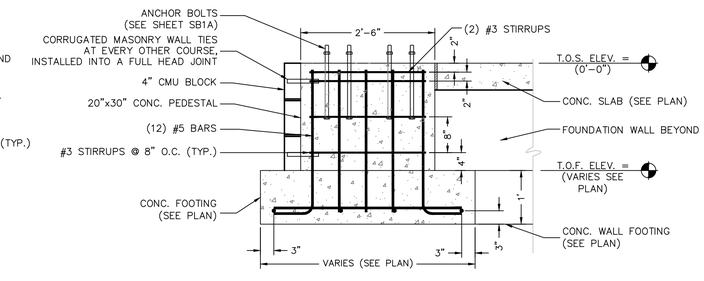

ELEVATION VIEW

CONCRETE PEDESTAL P6 DETAIL

SCALE: 3/4" = 1'-0"

NORTH (Building)

Winchester Virginia

CITY YARDS MAINTENANCE FACILITY: RENOVATION AND ADDITIONS
301 EAST CORK ST.
WINCHESTER, VIRGINIA
22601

ARCHITECT:

GDA

PAINTER-LEWIS, P.L.C.
817 CEDAR CREEK GRADE, SUITE 120
WINCHESTER, VIRGINIA 22601
Telephone: (540) 662-5792
Facsimile: (540) 662-5793
Email: office@painterlewis.com
CONSULTING ENGINEERS

COMMONWEALTH OF VIRGINIA
TIMOTHY G. PAINTER
Lic. No. 018260
08/14/19
PROFESSIONAL ENGINEER

M.E.P. ENGINEERS:

CDi
Comfort Designs Inc.
620 Pennsylvania Avenue
Winchester, VA 22604
540 665-2846

Seal

ISSUE/REVISIONS:

DRAWING TITLE:
CITY YARDS: BLDGS. 2,3,6,7 & 9

SHEET TITLE:
FOUNDATION DETAILS

DATE:	AUGUST 5, 2019
PROJECT NO.:	1801014
SCALE:	3/4"=1'-0"
SHEET:	SB15

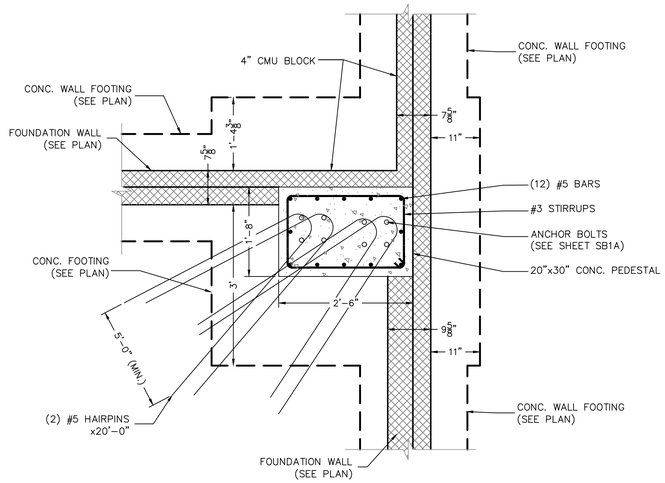

PLAN VIEW

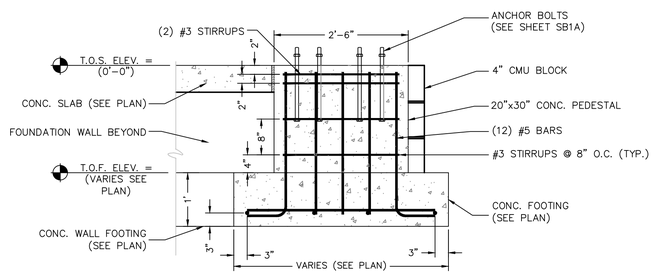

CONCRETE PEDESTAL P7 DETAIL

SCALE: 3/4" = 1'-0"

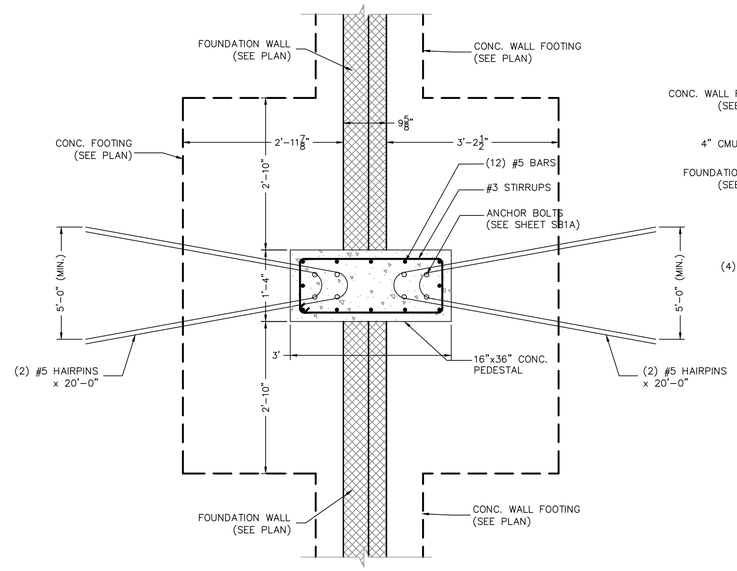

PLAN VIEW

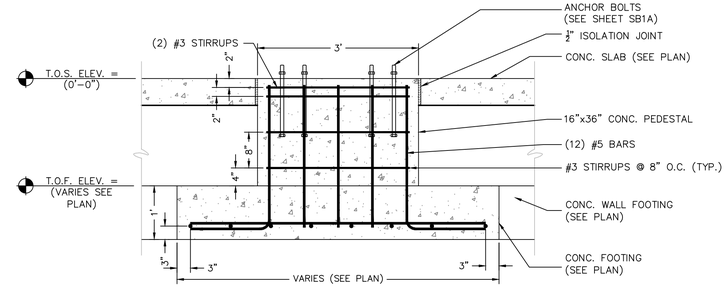

ELEVATION VIEW

CONCRETE PEDESTAL P8 DETAIL

SCALE: 3/4" = 1'-0"

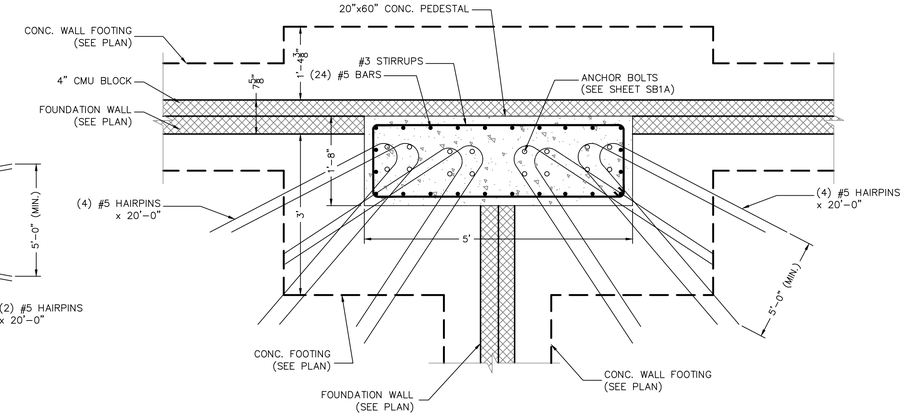

PLAN VIEW

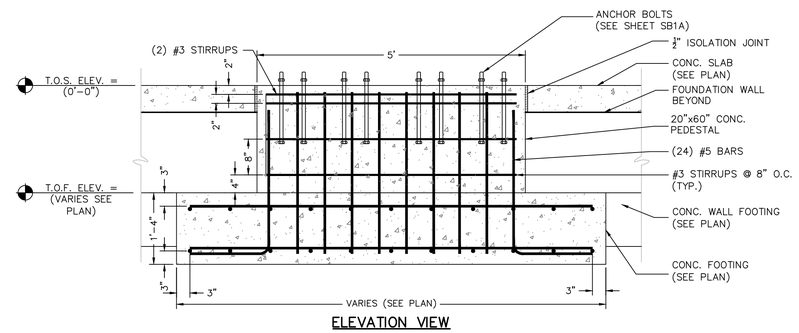

ELEVATION VIEW

CONCRETE PEDESTAL P9 DETAIL

SCALE: 3/4" = 1'-0"

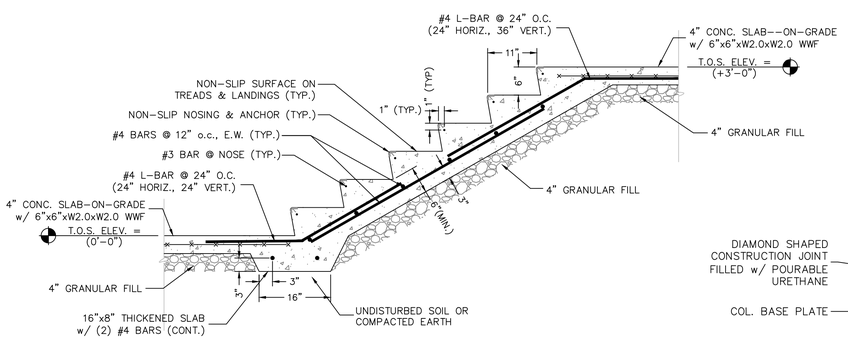

1 / SB16 TYP. CONCRETE STAIR DETAIL

SCALE: 3/4" = 1'-0"

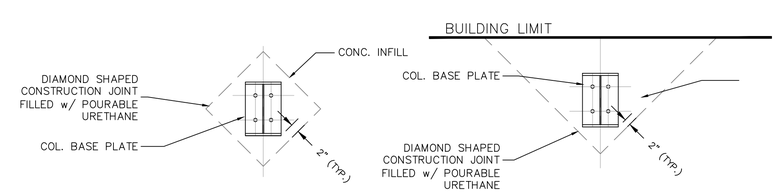

ISOLATION JOINT DETAILS

N.T.S.

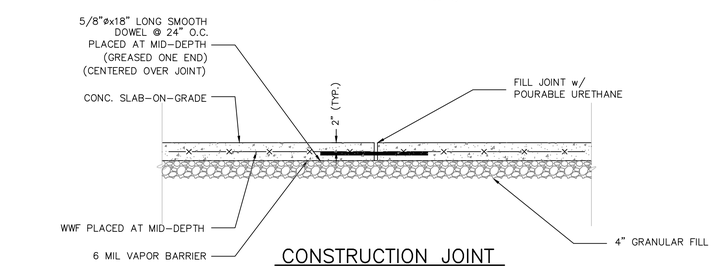

CONSTRUCTION JOINT

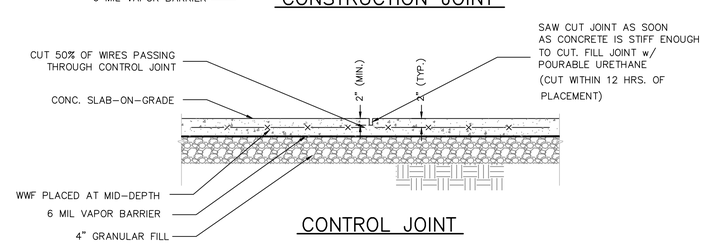

CONTROL JOINT

CONC. SLAB JOINT DETAILS

N.T.S.

NORTH (Building)

Winchester Virginia

CITY YARDS MAINTENANCE FACILITY: RENOVATION AND ADDITIONS
301 EAST CORK ST.
WINCHESTER, VIRGINIA 22601

ARCHITECT:

GDA

Seal

PAINTER-LEWIS, P.L.C.
CONSULTING ENGINEERS
817 CEDAR CREEK GRADE, SUITE 120
WINCHESTER, VIRGINIA 22601
Telephone: (540) 662-5792
Facsimile: (540) 662-5793
Email: office@painterlewis.com

COMMONWEALTH OF VIRGINIA
TIMOTHY G. PAINTER
Lic. No. 018260
08/14/19
PROFESSIONAL ENGINEER

M.E.P. ENGINEERS:

CDi
Comfort Designs Inc.
620 Pennsylvania Avenue
Winchester, VA 22604
540 665-2846

Seal

ISSUE/REVISIONS:

DRAWING TITLE: CITY YARDS: BLDGS. 2,3,6,7 & 9

SHEET TITLE: FOUNDATION DETAILS

DATE: AUGUST 5, 2019

PROJECT NO.: 1801014

SCALE: 3/4"=1'-0"

SHEET: SB16

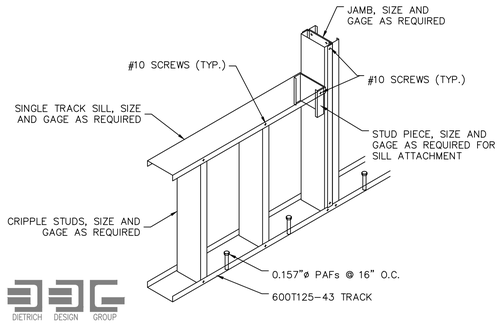

TYPICAL CRIPPLE WALL CONNECTION DETAIL

SCALE: 3/4" = 1'-0"

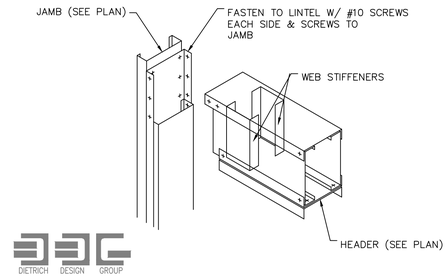

TYPICAL HEADER SUPPORT DETAIL

SCALE: 3/4" = 1'-0"

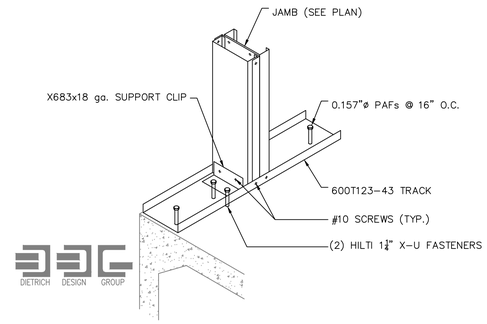

TYPICAL TRACK CONNECTION DETAIL

SCALE: 3/4" = 1'-0"

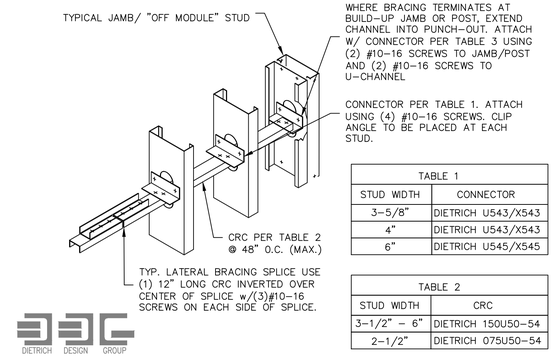

TABLE 1	
STUD WIDTH	CONNECTOR
3-5/8"	DIETRICH U543/X543
4"	DIETRICH U543/X543
6"	DIETRICH U545/X545

TABLE 2	
STUD WIDTH	CRC
3-1/2" - 6"	DIETRICH 150U50-54
2-1/2"	DIETRICH 075U50-54

TABLE 3	
STUD WIDTH	CONNECTOR
3-5/8"	DIETRICH B543
4"	DIETRICH B543
6"	DIETRICH B545

THIS BRACING IS NOT SUITABLE FOR WALL STUDS DEEPER THAN 6"
EACH END OF LATERAL BRACING MUST BE RIGIDLY FIXED OR OTHERWISE PREVENTED FROM HORIZONTAL MOVEMENT.

TYPICAL CFS WALL BRIDGING DETAIL

SCALE: 3/4" = 1'-0"

NOTE:
DIETRICH SHALL BE USED AS THE STANDARD OF QUALITY FOR THIS PROJECT. OTHER MANUFACTURERS MAY BE USED WITH THE APPROVAL OF THE DESIGN ENGINEER.

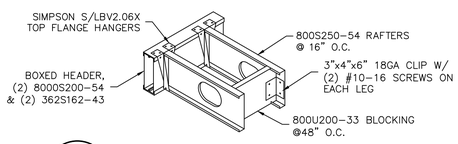

1/SB17 RAFTER CONNECTION DETAIL

SCALE: 3/4" = 1'-0"

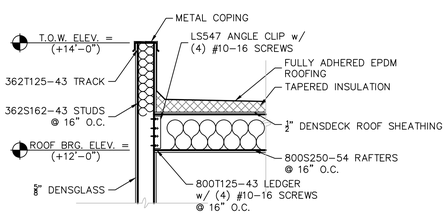

2/SB17 RAFTER CONNECTION DETAIL

SCALE: 3/4" = 1'-0"

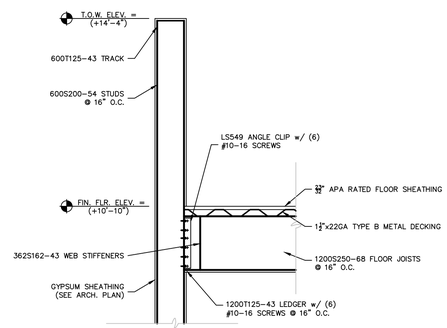

3/SB17 FLOOR JOIST CONNECTION DETAIL

SCALE: 3/4" = 1'-0"

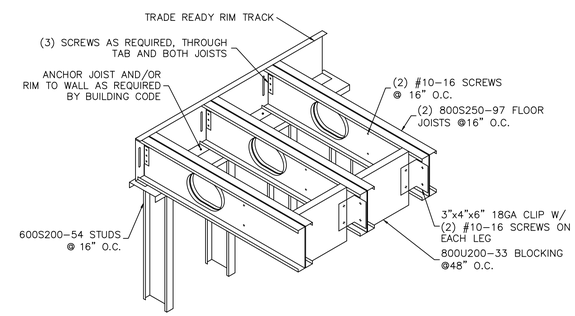

4/SB17 FLOOR JOISTS BEARING ON END WALL DETAIL

SCALE: 3/4" = 1'-0"

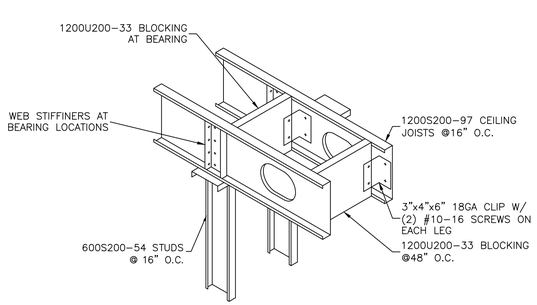

5/SB17 CONTINUOUS FLOOR JOISTS BEARING CONDITION ON WALL

SCALE: 3/4" = 1'-0"

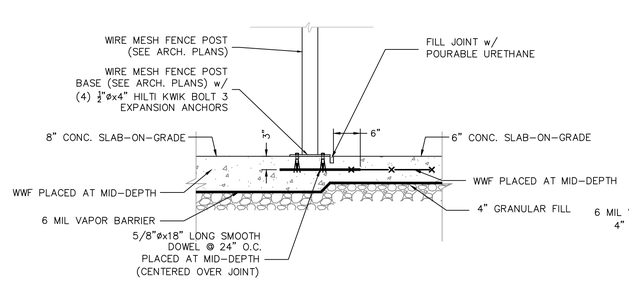

6/SB17 TYP. WIRE MESH FENCE POST CONNECTION DETAIL

SCALE: 3/4" = 1'-0"

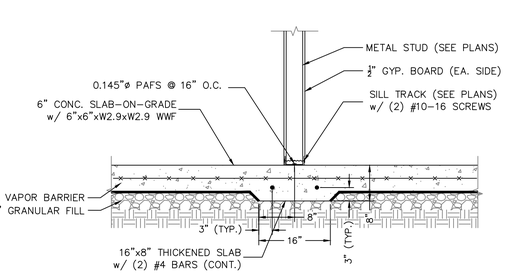

TYP. WF1 THICKENED SLAB DETAIL

SCALE: 3/4" = 1'-0"

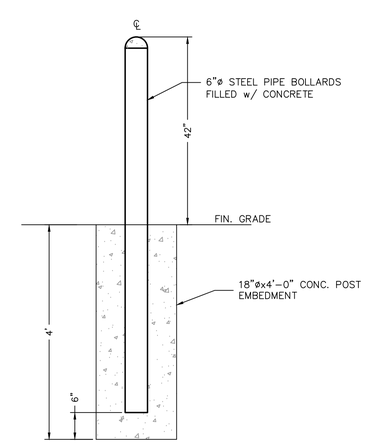

TYP. STEEL BOLLARD EMBEDMENT DETAIL

SCALE: 3/4" = 1'-0"

NORTH (Building)

Winchester Virginia

CITY YARDS MAINTENANCE FACILITY: RENOVATION AND ADDITIONS
301 East Cork St.
Winchester, Virginia 22601

ARCHITECT:
GDA Architecture Planning Interiors and Graphic Design
Gray & Duff Qito Architects pllc
Lisa Duff Qito | lisa@GDAstudio.com • GDAstudio.com
121 Megerhart Lane, Gerrardstown, WV 25420 304.262.2120
15 West Boscawen Street, Winchester, VA 22601 540.379.2126

Seal

PAINTER-LEWIS, P.L.C.
817 CEDAR CREEK GRADE, SUITE 120
WINCHESTER, VIRGINIA 22601
Telephone: (540) 662-5792
Facsimile: (540) 662-5793
Email: office@painterlewis.com
CONSULTING ENGINEERS

COMMONWEALTH OF VIRGINIA
TIMOTHY G. PAINTER
Lic. No. 018260
08/14/19
PROFESSIONAL ENGINEER

M.E.P. ENGINEERS:
CDi
Comfort Designs Inc.
620 Pennsylvania Avenue
Winchester, VA 22604
540 665-2846

Seal

ISSUE/REVISIONS:

DRAWING TITLE:
CITY YARDS: BLDGS. 2,3,6,7 & 9

SHEET TITLE:
FOUNDATION DETAILS

DATE:	AUGUST 5, 2019
PROJECT NO.:	1801014
SCALE:	3/4"=1'-0"
SHEET:	SB17

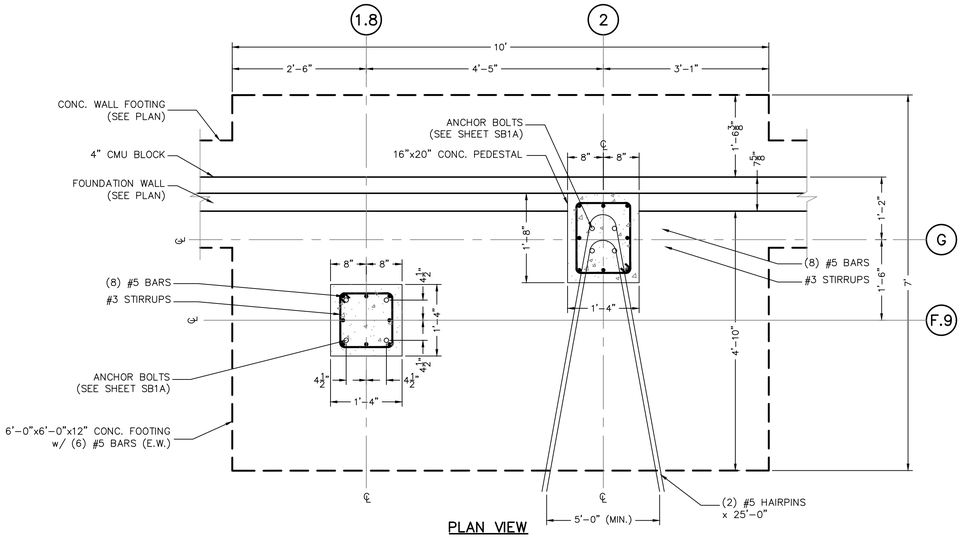

PLAN VIEW

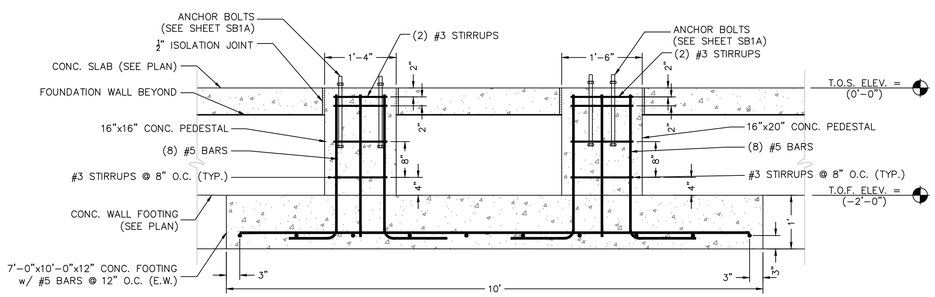

ELEVATION VIEW

1 SB18 CONCRETE PEDESTAL DETAIL

SCALE: 3/4" = 1'-0"

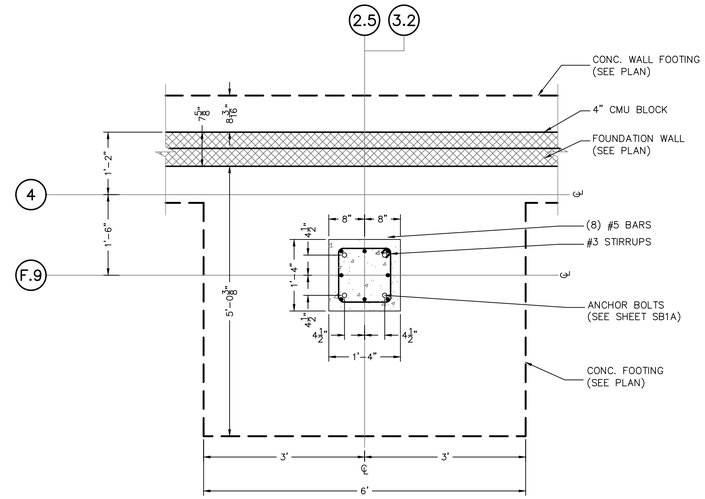

PLAN VIEW

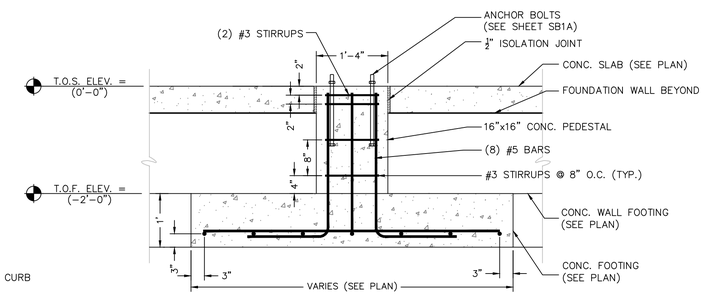

ELEVATION VIEW

2 SB18 CONCRETE PEDESTAL DETAIL

SCALE: 3/4" = 1'-0"

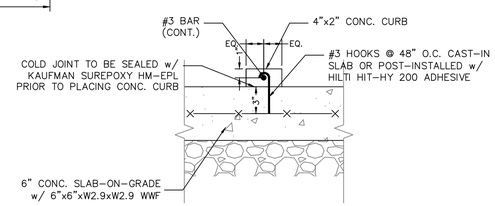

TYP. CONCRETE CURB DETAIL

SCALE: 1-1/2" = 1'-0"

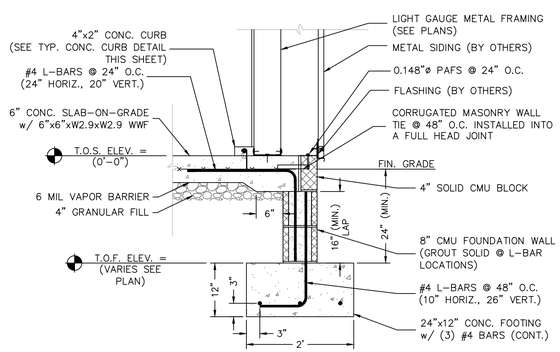

3 SB18 CONCRETE CURB DETAIL

SCALE: 3/4" = 1'-0"

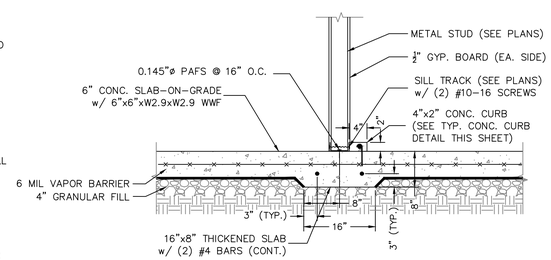

4 SB18 CONCRETE CURB DETAIL

SCALE: 3/4" = 1'-0"

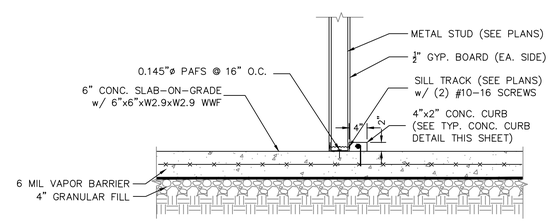

5 SB18 CONCRETE CURB DETAIL

SCALE: 3/4" = 1'-0"

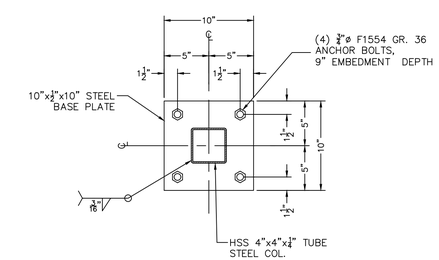

COLUMN C1 BASE PLATE DETAIL

SCALE: 1-1/2" = 1'-0"

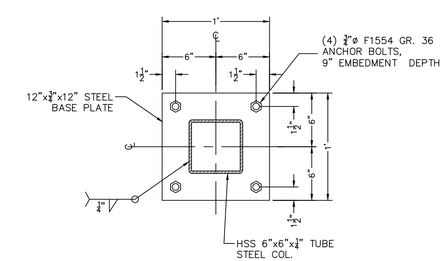

COLUMN C2 BASE PLATE DETAIL

SCALE: 1-1/2" = 1'-0"

NORTH (Building)

Winchester Virginia

CITY YARDS MAINTENANCE FACILITY: RENOVATION AND ADDITIONS
301 EAST CORK ST.
WINCHESTER, VIRGINIA 22601

ARCHITECT:

GDA

Seal

PAINTER-LEWIS, P.L.C.
CONSULTING ENGINEERS
817 CEDAR CREEK GRADE, SUITE 120
WINCHESTER, VIRGINIA 22601
Telephone: (540) 662-5792
Facsimile: (540) 662-5793
Email: office@painterlewis.com

COMMONWEALTH OF VIRGINIA
TIMOTHY G. PAINTER
Lic. No. 018260
08/14/19
PROFESSIONAL ENGINEER

M.E.P. ENGINEERS:
CDi
Comfort Designs Inc.
620 Pennsylvania Avenue
Winchester, VA 22604
540 665-2846

Seal

ISSUE/REVISIONS:

DRAWING TITLE: CITY YARDS: BLDGS. 2,3,6,7 & 9

SHEET TITLE: MEZZANINE FOUNDATION DETAILS

DATE: AUGUST 5, 2019

PROJECT NO.: 1801014

SCALE: ¾"=1'-0"

SHEET: SB18

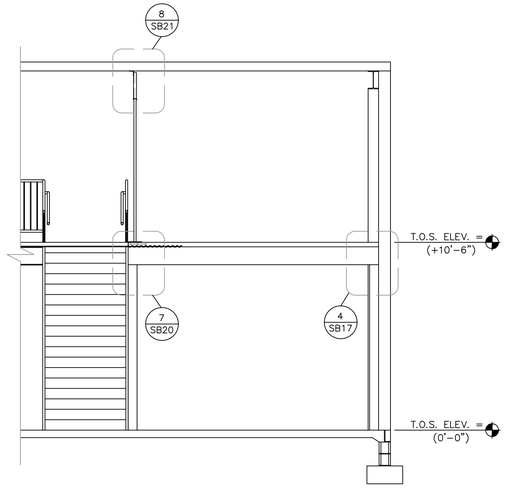

1 SB19 MEZZANINE SECTION
SCALE: 1/4"= 1'-0"

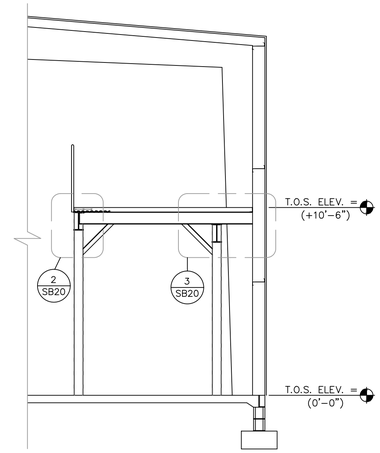

2 SB19 MEZZANINE SECTION
SCALE: 1/4"= 1'-0"

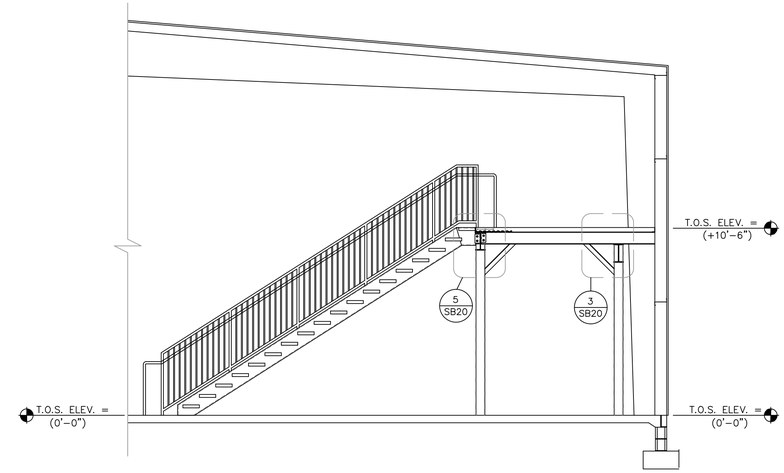

3 SB19 MEZZANINE SECTION
SCALE: 1/4"= 1'-0"

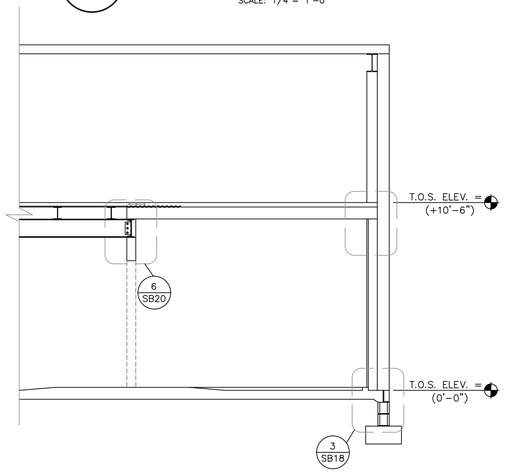

4 SB19 MEZZANINE SECTION
SCALE: 1/4"= 1'-0"

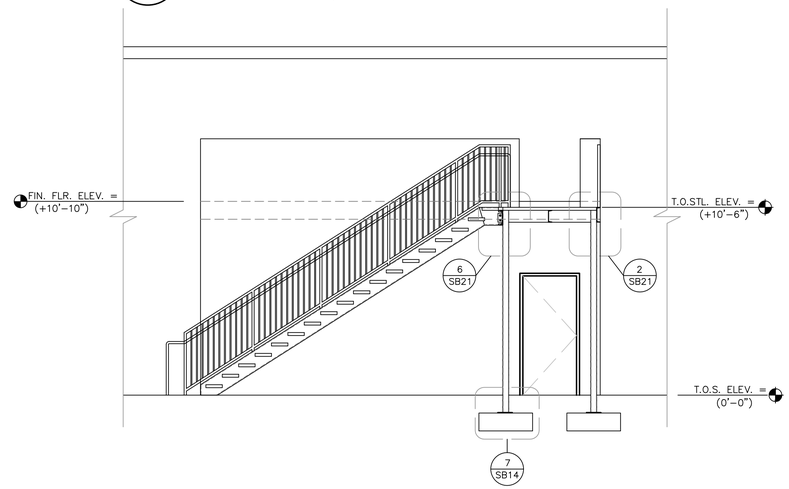

5 SB19 MEZZANINE SECTION
SCALE: 1/4"= 1'-0"

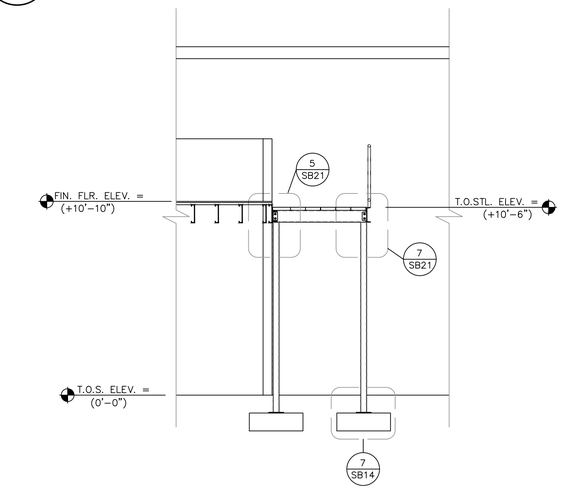

6 SB19 MEZZANINE SECTION
SCALE: 1/4"= 1'-0"

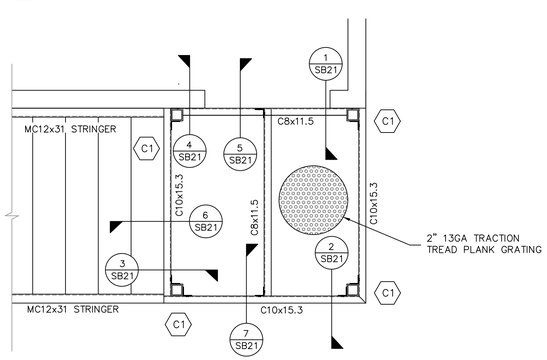

7 SB19 PLATFORM FRAMING PLAN
SCALE: 1/2"= 1'-0"

NORTH (Building)

Winchester Virginia

CITY YARDS MAINTENANCE FACILITY:
RENOVATION AND ADDITIONS
301 EAST CORK ST.
WINCHESTER, VIRGINIA
22601

ARCHITECT:

GDA

Seal

PAINTER-LEWIS, P.L.C.
817 CEDAR CREEK GRADE, SUITE 120
WINCHESTER, VIRGINIA 22601
Telephone: (540) 662-5792
Facsimile: (540) 662-5793
Email: office@painterlewis.com
CONSULTING ENGINEERS

COMMONWEALTH OF VIRGINIA
TIMOTHY G. PAINTER
Lic. No. 018260
08/14/19
PROFESSIONAL ENGINEER

M.E.P. ENGINEERS:

CDi
Comfort Designs Inc.
620 Pennsylvania Avenue
Winchester, VA 22604
540 665-2846

Seal

ISSUE/REVISIONS:

DRAWING TITLE:
CITY YARDS:
BLDGS. 2,3,6,7 & 9

SHEET TITLE:
MEZZANINE SECTIONS

DATE:	AUGUST 5, 2019
PROJECT NO.:	1801014
SCALE:	1/4"=1'-0"
SHEET:	SB19

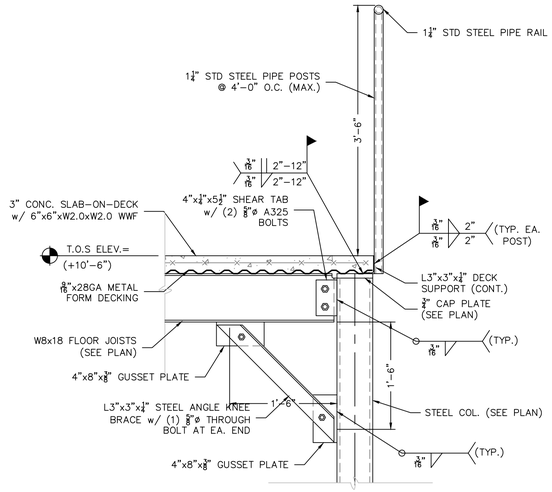

1 SB20 MEZZANINE SECTION DETAIL

SCALE 1" = 1'-0"

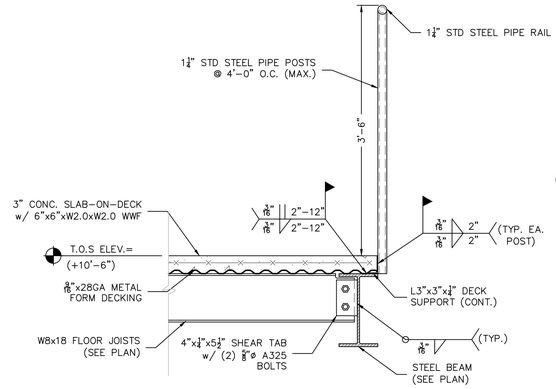

2 SB20 MEZZANINE SECTION DETAIL

SCALE 1" = 1'-0"

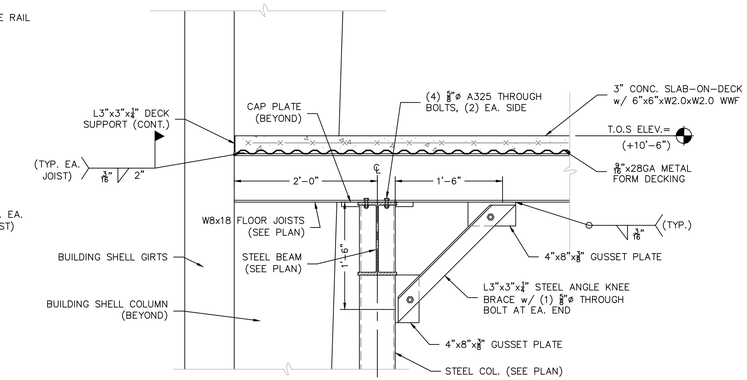

3 SB20 MEZZANINE SECTION DETAIL

SCALE 1" = 1'-0"

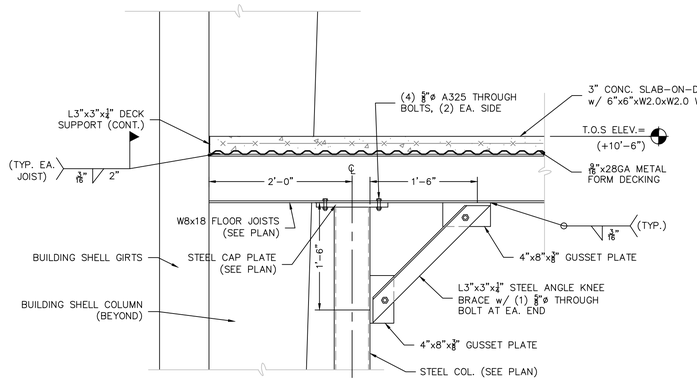

3A SB20 MEZZANINE SECTION DETAIL

SCALE 1" = 1'-0"

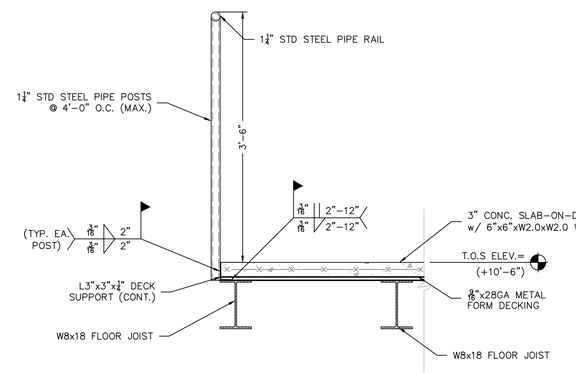

4 SB20 MEZZANINE SECTION DETAIL

SCALE 1" = 1'-0"

NOTE:
ELEVATED PLATFORM SURFACE AND STAIR TREADS SHALL CONSIST OF 13 GA, 2" DEPTH MCNICHOLS QUALITY TRACTION TREAD PLANK GRATING WITH PERFORATED SMALL HOLES, ITEM#: M212201310, OR EQUAL.

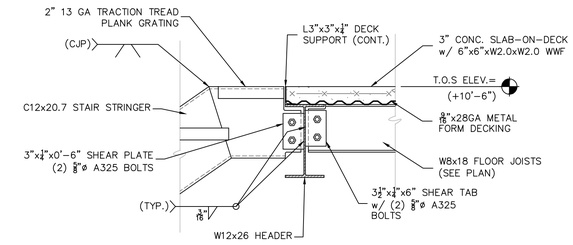

5 SB20 MEZZANINE-TO-STAIR CONNECTION DETAIL

SCALE 1" = 1'-0"

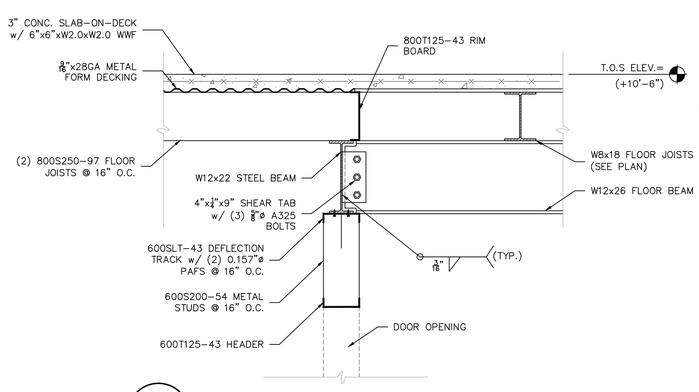

6 SB20 MEZZANINE SECTION DETAIL

SCALE 1" = 1'-0"

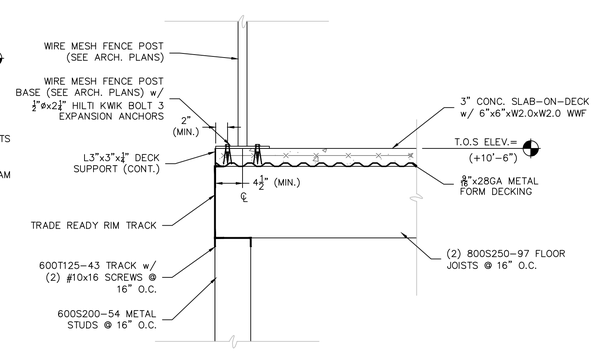

7 SB20 MEZZANINE SECTION DETAIL

SCALE 1" = 1'-0"

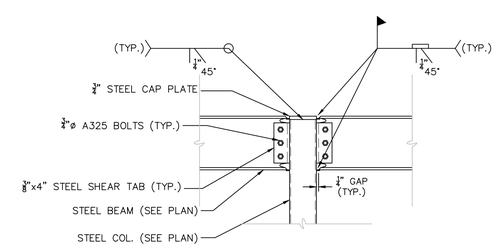

TYP. C2 BEAM-TO-COL. MOMENT CONNECTION DETAIL

SCALE 3/4" = 1'-0"

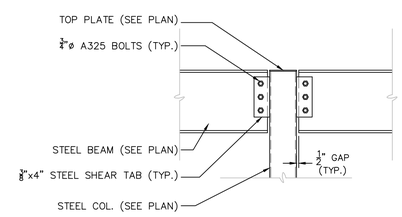

TYP. BEAM-TO-COL. SHEAR CONNECTION DETAIL

SCALE 3/4" = 1'-0"

NORTH (Building)

Winchester Virginia

CITY YARDS MAINTENANCE FACILITY: RENOVATION AND ADDITIONS
301 EAST CORK ST.
WINCHESTER, VIRGINIA 22601

ARCHITECT:
GDA

PAINTER-LEWIS, P.L.C.
817 CEDAR CREEK GRADE, SUITE 120
WINCHESTER, VIRGINIA 22601
Telephone: (540) 662-5792
Facsimile: (540) 662-5793
Email: office@painterlewis.com
CONSULTING ENGINEERS

COMMONWEALTH OF VIRGINIA
TIMOTHY G. PAINTER
Lic. No. 018260
08/14/19
PROFESSIONAL ENGINEER

M.E.P. ENGINEERS:
CDi
Comfort Designs Inc.
620 Pennsylvania Avenue
Winchester, VA 22604
540 665-2846

Seal

ISSUE/REVISIONS:

DRAWING TITLE:
CITY YARDS: BLDGS. 2,3,6,7 & 9

SHEET TITLE:
MEZZANINE FRAMING DETAILS

DATE:	AUGUST 5, 2019
PROJECT NO.:	1801014
SCALE:	¾"=1'-0"
SHEET:	SB20

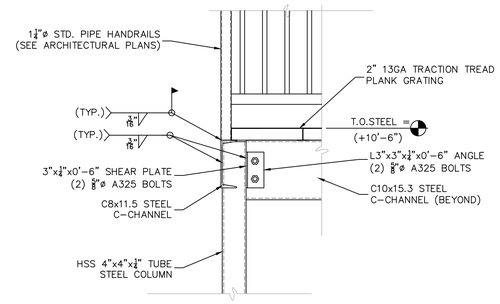

1 SB21 BEAM-TO-COLUMN CONNECTION DETAIL

SCALE 1" = 1'-0"

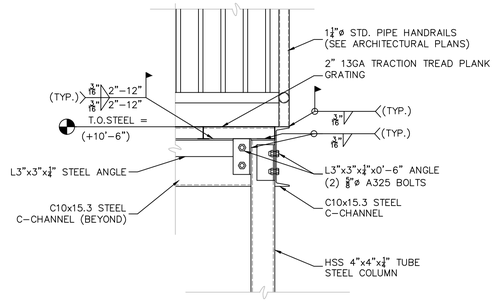

2 SB21 BEAM-TO-COLUMN CONNECTION DETAIL

SCALE 1" = 1'-0"

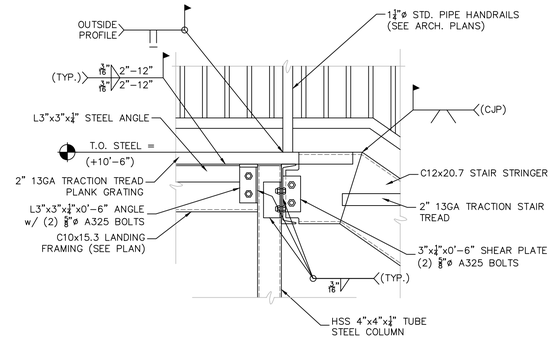

3 SB21 PLATFORM-TO-STAIR CONNECTION DETAIL

SCALE 1" = 1'-0"

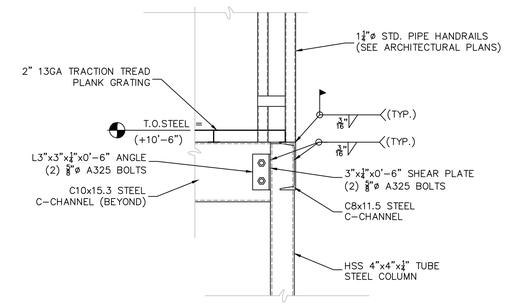

4 SB21 BEAM-TO-COLUMN CONNECTION DETAIL

SCALE 1" = 1'-0"

NOTE:
ELEVATED PLATFORM SURFACE AND STAIR TREADS SHALL CONSIST OF 13 GA, 2" DEPTH MONICHOLS QUALITY TRACTION TREAD PLANK GRATING WITH PERFORATED SMALL HOLES, ITEM#: M212201310, OR EQUAL.

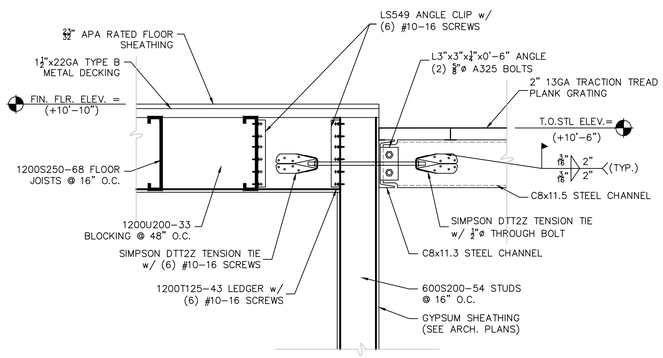

5 SB21 BEAM-TO-BEAM CONNECTION DETAIL

SCALE 1" = 1'-0"

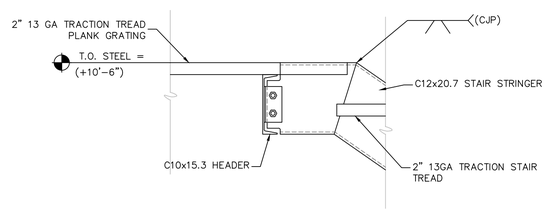

6 SB21 PLATFORM-TO-STAIR CONNECTION DETAIL

SCALE 1" = 1'-0"

NOTE:
ELEVATED PLATFORM SURFACE AND STAIR TREADS SHALL CONSIST OF 13 GA, 2" DEPTH MONICHOLS QUALITY TRACTION TREAD PLANK GRATING WITH PERFORATED SMALL HOLES, ITEM#: M212201310, OR EQUAL.

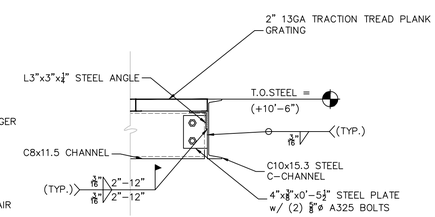

7 SB21 BEAM-TO-BEAM CONNECTION DETAIL

SCALE 1" = 1'-0"

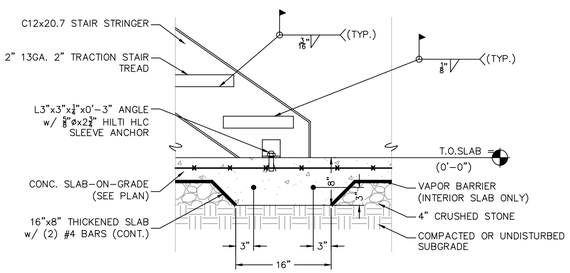

STAIR THICKENED SLAB DETAIL

SCALE 1" = 1'-0"

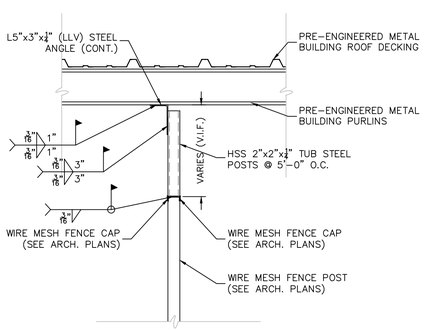

8 SB21 MESH FENCE CONNECTION DETAIL

SCALE 1" = 1'-0"

9/16" x 28 GAGE TYPE UFS DECK
1'-4" MAXIMUM BETWEEN SUPPORTS

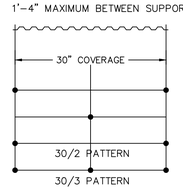

FORM DECK SHALL BE FASTENED AT SUPPORTS w/ #10-16 SCREWS, OR EQUAL, USING A 30/2 PATTERN. END LAPS SHALL BE FASTENED w/ #10-16 SCREWS, OR EQUAL, USING A 30/3 PATTERN. SIDE LAPS SHALL BE FASTENED w/ (1) #10 SCREW CENTERED IN EA. SPAN.

STEEL DECK FASTENING PATTERN OVER CFS FRAMING

SCALE N.T.S.

1 1/2" x 22 GAGE TYPE B DECK
2'-6" MAXIMUM BETWEEN SUPPORTS

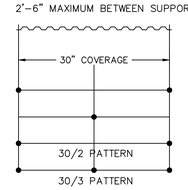

B DECK SHALL BE FASTENED AT SUPPORTS w/ #10-16 SCRWS, OR EQUAL, USING A 30/2 PATTERN. END LAPS SHALL BE FASTENED w/ #10-16 SCREWS, OR EQUAL, USING A 30/3 PATTERN. SIDE LAPS SHALL BE FASTENED w/ (1) #10 SCREW CENTERED IN EA. SPAN.

STEEL DECK FASTENING PATTERN OVER CFS FRAMING

SCALE N.T.S.

9/16" x 28 GAGE TYPE UFS DECK
1'-4" MAXIMUM BETWEEN SUPPORTS

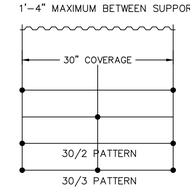

FORM DECK SHALL BE WELDED AT SUPPORTS w/ ⅝" DIA. PUDDLE WELDS AND WELD WASHERS, USING A 30/2 PATTERN. END LAPS SHALL BE FASTENED w/ ⅝" DIA, PUDDLE WELDS USING A 30/3 PATTERN. SIDE LAPS SHALL BE FASTENED w/ (3) #10 SCREWS EQUALLY SPACED IN EA. SPAN.

STEEL DECK FASTENING PATTERN OVER STEEL FRAMING

SCALE N.T.S.

NORTH (Building)

Winchester Virginia

CITY YARDS MAINTENANCE FACILITY: RENOVATION AND ADDITIONS
301 EAST CORK ST.
WINCHESTER, VIRGINIA 22601

ARCHITECT:
GDA

Seal

PAINTER-LEWIS, P.L.C.
817 CEDAR CREEK GRADE, SUITE 120
WINCHESTER, VIRGINIA 22601
Telephone: (540) 662-5792
Facsimile: (540) 662-5793
Email: office@painterlewis.com
CONSULTING ENGINEERS

COMMONWEALTH OF VIRGINIA
TIMOTHY G. PAINTER
Lic. No. 018260
08/14/19
PROFESSIONAL ENGINEER

M.E.P. ENGINEERS:
CDi
Comfort Designs Inc.
620 Pennsylvania Avenue
Winchester, VA 22604
540 665-2846

Seal

ISSUE/REVISIONS:

DRAWING TITLE:
CITY YARDS: BLDGS. 2,3,6,7 & 9

SHEET TITLE:
MEZZANINE FRAMING DETAILS

DATE: AUGUST 5, 2019
PROJECT NO.: 1801014
SCALE: ¾"=1'-0"
SHEET:
SB21

Finish Schedule

Room	Description	Floor Material	Base Material	Finish	Wall Material	Finish	Ceiling Material	Finish
301	Vehicle Storage Bay	Concrete with Clear Sealer	-	-	Liner Panels to 8' full height at stacks	Factory Finish	-	-
302	Welding Room	Concrete with Clear Sealer	Vinyl	Grey	Type X Greenboard Drywall	Primer & 2 Finis	Greenboard Drywall	Primer & 2 Finish Coats
303	Meter Testing Room	Concrete with Clear Sealer	Vinyl	Grey	FRP Panels		Greenboard Drywall	Primer & 2 Finish Coats
303	Sprinkler Room	Concrete with Clear Sealer	Vinyl	Grey	Type X Greenboard Drywall	Primer & 2 Finis	-	-

Vinyl Base - Johnsonite Traditional Wall Base Color: # 28 Medium Grey CG- Class C
Wall Color (on drywall walls only) - Satin finish. Benjamin Moore Aqua Waterborne Decorator's White
Ceiling Color (on drywall ceilings only) - Flat finish. Benjamin Moore Aqua Waterborne Decorator's White
FRP = Fiberglass reinforced panels by Panolam or approved equal - Color Grey

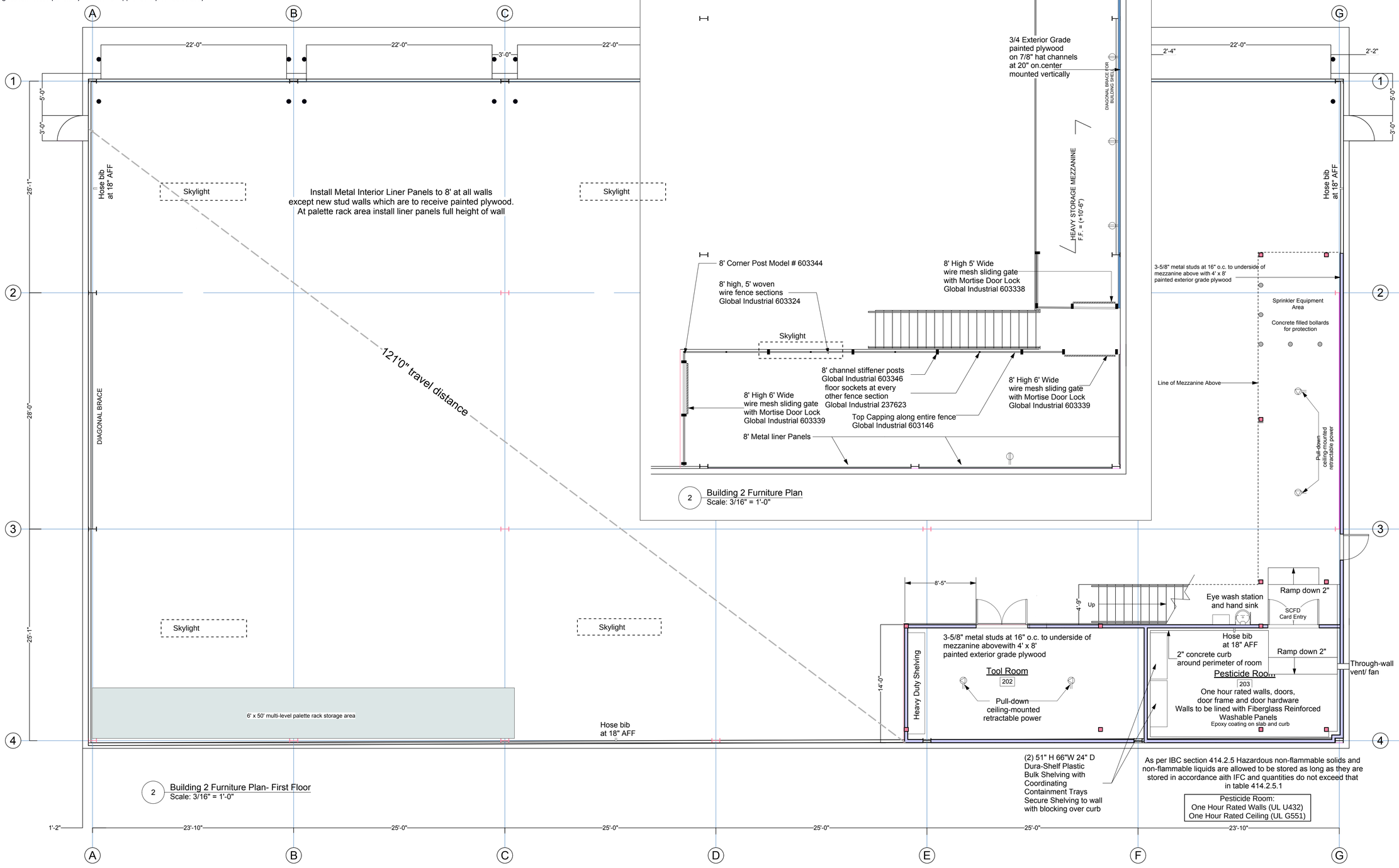

NORTH (Building)

CITY YARDS MAINTENANCE FACILITY: RENOVATION and ADDITIONS
301 East Cork St.
Winchester, Virginia 22601

ARCHITECT:

Grove & Dall'Olio Architects PLLC
18 West Boscawen Street
Winchester, VA 22604
540 773-2328

Seal

COMMONWEALTH OF VIRGINIA
Lisa Dallolio
Lic. No. 014691
ARCHITECT

PAINTER-LEWIS, P.L.C.
817 CEDAR CREEK GRADE, SUITE 120
WINCHESTER, VIRGINIA 22601
Telephone: (540) 662-5792
Facsimile: (540) 662-5793
Email: office@painterlewis.com
CONSULTING ENGINEERS

M.E.P. ENGINEERS:

Comfort Designs Inc.
620 Pennsylvania Avenue
Winchester, VA 22604
540 665-2846

Seal

ISSUE / REVISIONS:

DRAWING TITLE:
CITY YARDS BULDING #2

SHEET TITLE:
INTERIOR FINISHES, FIXTURE & EGRESS PLAN

DATE:	AUGUST 5, 2019
PROJECT NO.:	1801014
SCALE:	AS NOTED
SHEET:	A-1

Finish Schedule

Room	Description	Floor Material	Base Material	Finish	Wall Material	Finish	Ceiling Material	Finish
301	Vehicle Storage Bay	Concrete with Clear Sealer	-	-	Liner Panels to 8' full height at stacks	Factory Finish	-	-
302	Welding Room	Concrete with Clear Sealer	Vinyl	Grey	Type X Greenboard Drywall	Primer & 2 Finis	Greenboard Drywall	Primer & 2 Finish Coats
303	Meter Testing Room	Concrete with Clear Sealer	Vinyl	Grey	FRP Panels		Greenboard Drywall	Primer & 2 Finish Coats
303	Sprinkler Room	Concrete with Clear Sealer	Vinyl	Grey	Type X Greenboard Drywall	Primer & 2 Finis	-	-

Vinyl Base - Johnsonite Traditional Wall Base Color: # 28 Medium Grey CG- Class C
Wall Color (on drywall walls only) - Satin finish. Benjamin Moore Aqua Waterborne Decorator's White
Ceiling Color (on drywall ceilings only) - Flat finish. Benjamin Moore Aqua Waterborne Decorator's White
FRP = Fiberglass reinforced panels by Panolam or approved equal - Color Grey

Storage Systems

A **(3) 2 Level Pallet Racks**
(3) sections of 96" wide, 120" high x 42" two level deep pallet racks
Provide cross beams at 36" on
center for weight bearing capacity 19380 lbs per 96" section

B **(7) 5 Level Bulk Storage Racks**
(5) sections of 96" wide, 120" high x 42" two level deep pallet racks
(2) sections of 48" wide, 120" high x 42" two level deep pallet racks
Huskey Rack and Wire Model 184212043096S
Starters and Model 184212043096A Add-on
or approved equals. Provide cross beams at 36" on
center for weight bearing capacity 19380 lbs per 96" section
and extra beam rack pairs and wire mesh decking to make 5 levels
at each 96" section

C **(6) 8' high cantilevered arm storage rack**
Install (6) MECO 2000 Series Heavy Duty Racks
with (9) MECO Series 2000 24" straight arms with lips
and (9) MECO Series 2000 cantilevered inclined arms.

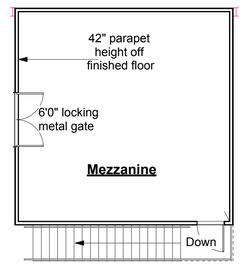

2 Building 3 Mezzanine Furniture and Egress Plan
Scale: 1/8" = 1'-0"

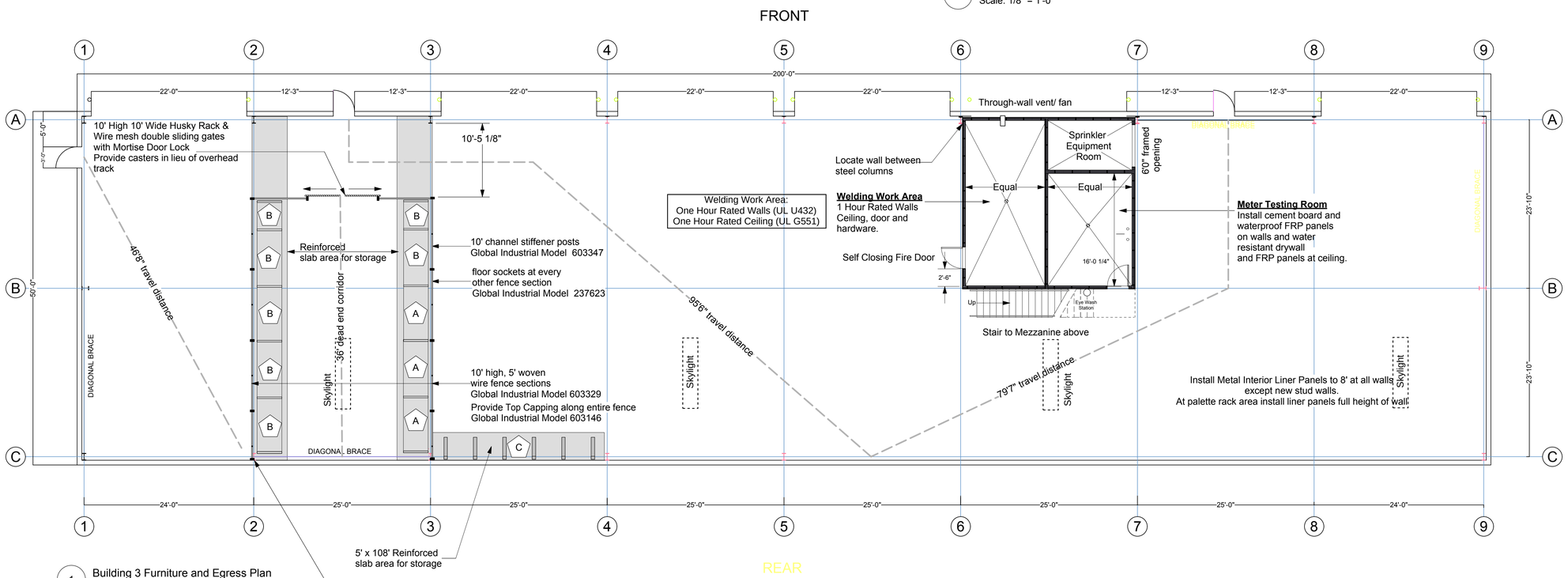

1 Building 3 Furniture and Egress Plan
Scale: 1/8" = 1'-0"

NORTH (Building)

CITY YARDS
MAINTENANCE FACILITY:
RENOVATION and ADDITIONS
301 East Cork St.
Winchester, Virginia 22601

ARCHITECT:

Grove & Dall'Olio Architects PLLC
18 West Boscawen Street
Winchester, VA 22604
540 773-2328

Seal
COMMONWEALTH OF VIRGINIA
Lisa Dallolio
Lic. No. 014691
ARCHITECT

PAINTER-LEWIS, P.L.C.
817 CEDAR CREEK GRADE, SUITE 120
WINCHESTER, VIRGINIA 22601
Telephone: (540) 662-5792
Facsimile: (540) 662-5793
Email: office@painterlewis.com
CONSULTING ENGINEERS

M.E.P. ENGINEERS:

Comfort Designs Inc.
620 Pennsylvania Avenue
Winchester, VA 22604
540 665-2846

Seal

ISSUE / REVISIONS:

DRAWING TITLE:
CITY YARDS
BULDING #3

SHEET TITLE:
INTERIOR FINISHES,
FIXTURE &
EGRESS PLAN

DATE: AUGUST 5, 2019
PROJECT NO.: 1801014
SCALE: AS NOTED
SHEET:
A-2

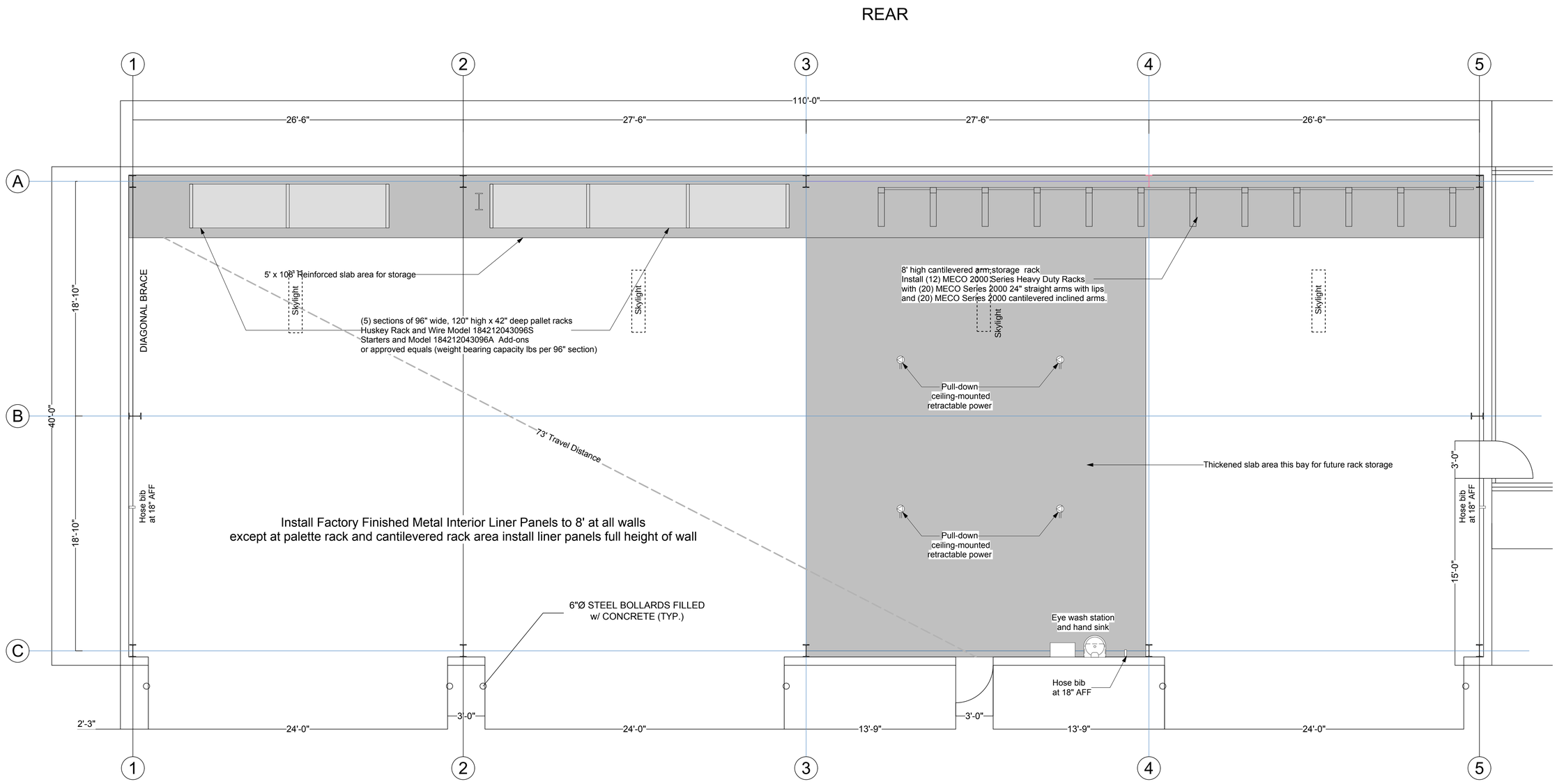

1 Building 6 Furniture and Egress Plan
Scale: 1/4" = 1'-0"

FRONT

NORTH (Building)

CITY YARDS
MAINTENANCE FACILITY:
RENOVATION and ADDITIONS
301 East Cork St.
Winchester, Virginia 22601

ARCHITECT:

Grove & Dall'Olio Architects PLLC
18 West Boscawen Street
Winchester, VA 22604
540 773-2328

Seal

COMMONWEALTH OF VIRGINIA
Lisa Dallolio
Lic. No. 014691
ARCHITECT

PAINTER-LEWIS, P.L.C.
817 CEDAR CREEK GRADE, SUITE 120
WINCHESTER, VIRGINIA 22601
Telephone: (540) 662-5792
Facsimile: (540) 662-5793
Email: office@painterlewis.com
CONSULTING ENGINEERS

M.E.P. ENGINEERS:

CDi
Comfort Designs Inc.
620 Pennsylvania Avenue
Winchester, VA 22604
540 665-2846

Seal

ISSUE / REVISIONS:

DRAWING TITLE:
CITY YARDS
BULDING #6

SHEET TITLE:
INTERIOR FINISHES,
FIXTURE &
EGRESS PLAN

DATE:	AUGUST 5, 2019
PROJECT NO.:	1801014
SCALE:	AS NOTED
SHEET:	A-3

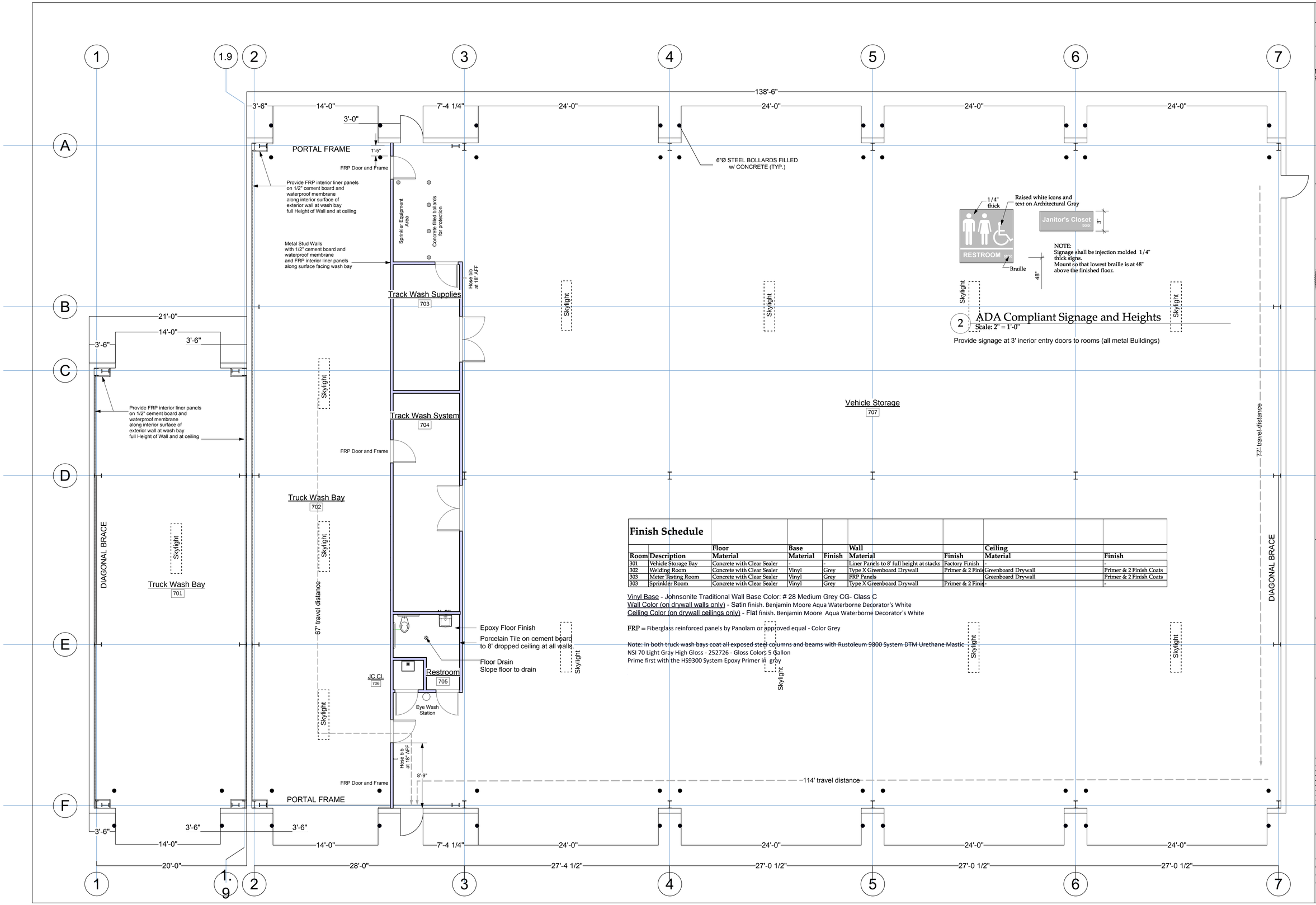

2 ADA Compliant Signage and Heights
Scale: 2" = 1'-0"

Provide signage at 3' inerior entry doors to rooms (all metal Buildings)

Finish Schedule

Room	Description	Floor Material	Base Material	Finish	Wall Material	Finish	Ceiling Material	Finish
301	Vehicle Storage Bay	Concrete with Clear Sealer	-	-	Liner Panels to 8' full height at stacks	Factory Finish	-	-
302	Welding Room	Concrete with Clear Sealer	Vinyl	Grey	Type X Greenboard Drywall	Primer & 2 Finis	Greenboard Drywall	Primer & 2 Finish Coats
303	Meter Testing Room	Concrete with Clear Sealer	Vinyl	Grey	FRP Panels		Greenboard Drywall	Primer & 2 Finish Coats
303	Sprinkler Room	Concrete with Clear Sealer	Vinyl	Grey	Type X Greenboard Drywall	Primer & 2 Finis	-	-

Vinyl Base - Johnsonite Traditional Wall Base Color: # 28 Medium Grey CG- Class C
Wall Color (on drywall walls only) - Satin finish. Benjamin Moore Aqua Waterborne Decorator's White
Ceiling Color (on drywall ceilings only) - Flat finish. Benjamin Moore Aqua Waterborne Decorator's White

FRP = Fiberglass reinforced panels by Panolam or approved equal - Color Grey

Note: In both truck wash bays coat all exposed steel columns and beams with Rustoleum 9800 System DTM Urethane Mastic
NSI 70 Light Gray High Gloss - 252726 - Gloss Colors 5 Gallon
Prime first with the HS9300 System Epoxy Primer in gray

NORTH (Building)

CITY YARDS MAINTENANCE FACILITY: RENOVATION and ADDITIONS
301 East Cork St.
Winchester, Virginia 22601

ARCHITECT:

Grove & Dall'Olio Architects PLLC
18 West Bosacawen Street
Winchester, VA 22604
540 773-2328

Seal
COMMONWEALTH OF VIRGINIA
Lisa Dallolio
Lic. No. 014691
ARCHITECT

PAINTER-LEWIS, P.L.C.
817 CEDAR CREEK GRADE, SUITE 120
WINCHESTER, VIRGINIA 22601
Telephone: (540) 662-5792
Facsimile: (540) 662-5793
Email: office@painterlewis.com
CONSULTING ENGINEERS

M.E.P. ENGINEERS:

Comfort Designs Inc.
620 Pennsylvania Avenue
Winchester, VA 22604
540 665-2846

Seal

ISSUE / REVISIONS:

DRAWING TITLE:
CITY YARDS BULDING #7

SHEET TITLE:
INTERIOR FINISHES, FIXTURE & EGRESS PLAN

DATE: AUGUST 5, 2019
PROJECT NO.: 1801014
SCALE: AS NOTED
SHEET: A-4

UNIT HEATER SCHEDULE	
DESCRIPTION	UH-1
MODINE MODEL	PTS-250
BTUH INPUT	250,000
BTUH OUTPUT CAP.	205,000
CFM	3,995
HORSEPOWER	1/3
AIR TEMP. RISE (^F)	47
ELECTRICAL (V/Ø/HZ)	115/1/60
ELECTRICAL AMPS	7.15 AMPS
MOUNTING HEIGHT	SEE NOTE 2
QUANTITY	PER DWG.

NOTES:
1. CONTRACTOR SHALL FURNISH & INSTALL ALL NATURAL GAS UNIT HEATERS, 2 PSI BLACK IRON PIPING, VALVES, REGULATORS, HANGERS, SUPPORTS, POWER VENT FLUES, ROOF/WALL CURBS, ETC. IN ACCORDANCE WITH THE VIRGINIA VIRGINIA (INTERNATIONAL) FUEL GAS, MECHANICAL & PLUMBING CODES, LOCAL CODE & GAS COMPANY REQUIREMENTS. CONTRACTOR SHALL OBTAIN & PAY FOR ALL NECESSARY FEES & PERMITS. UNIT HEATERS SHALL BE PROVIDED COMPLETE W/ T'STAT, DISCONNECT SWITCH & GAS CONTROLS.
2. INSTALL UNIT HEATERS IN ROOF JOISTS/PURLINS AS HIGH AS POSSIBLE. APPROXIMATELY 17 FEET. FOLLOW MANUFACTURER'S MINIMUM CLEARANCES TO ROOF STRUCTURE.
3. PROVIDE MODINE OR EQUAL HORIZONTAL OR VERTICAL CONCENTRIC VENT KITS. FOLLOW MANUFACTURER'S MINIMUM CLEARANCES TO ROOF OR WALL STRUCTURE.

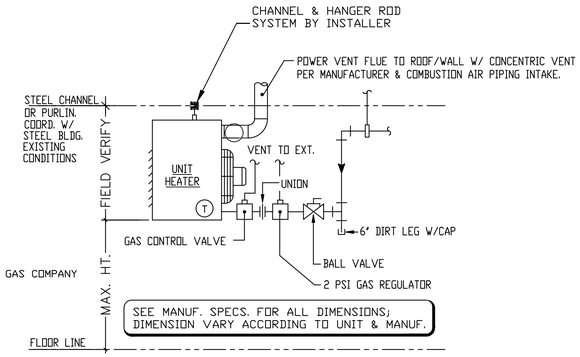

POWER VENT GAS FIRED UNIT HEATER DETAIL
N.T.S.

Figure 13.1 - Horizontal Concentric Vent Kit

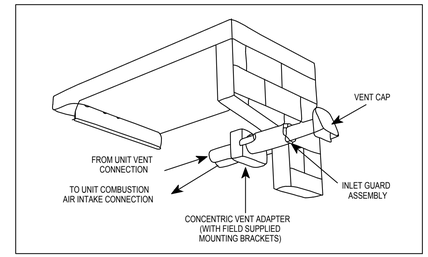

Figure 13.2 - Vertical Concentric Vent Kit

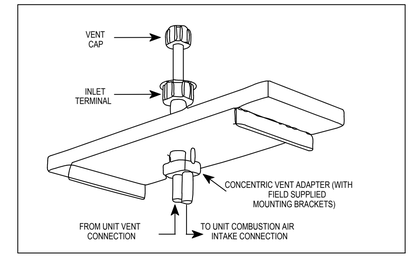

Table 13.2 - Field Installed Thermostats

	Type	Description
Single-Stage Thermostats	Room Thermostat	White Rodgers 1C20-101: 50° - 90°F, 1.0A @ 24VAC
		White Rodgers 1C26-101: 50° - 90°F, 1.0A @ 24VAC, Heat/Off & Fan On/Auto Switches

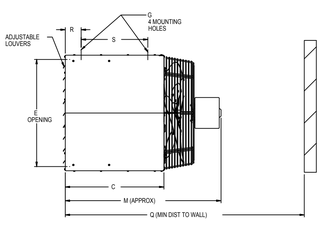

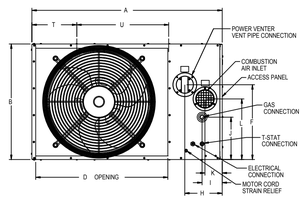

Models	PTS250
A	42.53
B	31.31
C	22.05
D	29.52
E	29.43
F	19.45
G (Mounting Hole) k	3/8-16
H	8.37
I	4.50
J	6.72
K	5.20
L	12.66
M	33.83
Q l	45.83
R	3.56
S	14.90
T	10.00
U	20.53
Gas Connection	3/4
Vent and Combustion Air Connector Size	6"
Fan Diameter	22.00
Approx. Shipping Wt (lbs.)	265

j Do not use propeller units with duct work.
k Listed is the hole diameter and threads per inch to accept threaded rod.
l Dimension equals overall plus 12".

Table 19.2 - Clearances to Combustible Materials

Unit Side	Clearance To Combustible Materials	Recommended Service Clearance
Top and Bottom	6"	6"
Access Side	6"	18"
Non-Access Side	6"	6"
Rear	18"	18"
Vent Connector	6"	6"

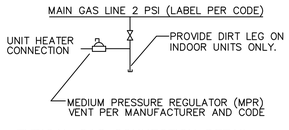

TYPICAL GAS CONNECTION DETAIL
NOT TO SCALE

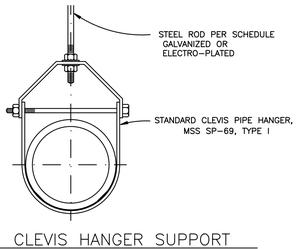

CLEVIS HANGER SUPPORT
N.T.S.

VIRGINIA FUEL GAS CODE

Spacing of supports for CSST shall be in accordance with the CSST manufacturer's instructions.

TABLE 415.1
SUPPORT OF PIPING

STEEL PIPE, NOMINAL SIZE OF PIPE (inches)	SPACING OF SUPPORTS (feet)	NOMINAL SIZE OF TUBING (SMOOTH-WALL) (inch O.D.)	SPACING OF SUPPORTS (feet)
$^1/_2$	6	$^1/_2$	4
¾ or 1	8	$^5/_8$ or $^3/_4$	6
$1^1/_4$ or larger (horizontal)	10	$^7/_8$ or 1 (horizontal)	8
$1^1/_4$ or larger (vertical)	Every floor level	1 or larger (vertical)	Every floor level

For SI: 1 inch = 25.4 mm, 1 foot = 304.8 mm.

❖ This table is two tables side-by-side. The first two columns are for steel pipe, and the second two columns are for tubing materials (see Section 407). Support for CSST is dictated by the manufacturers' installation instructions.

FAN SCHEDULE

MARK	AREA / SERVICE	PERFORMANCE DATA CFM	SP (IN. W.G.)	RPM	CONSTRUCTION DATA TYPE	DRIVE	ELECTRICAL DATA WATTS (HP)	VOLT	PH	MAX WEIGHT LBS.	MANUFACTURER	NOTES
EF 1	BATHROOMS	90	0.5	950	CEILING MOUNTED	DIRECT	100	120	1	12	GREENHECK SP-B110	1-4

NOTES:
1. STANDARD PREWIRED DISCONNECT SWITCH. COORDINATE WITH ELECTRICAL CONTRACTOR.
2. VIBRATION ISOLATORS AND BRACKETS
3. W/ MANUFACTURER WALL/ROOF CAP
4. BATHROOM EXHAUST FAN SHALL HAVE OCCUPANCY SENSORS.

City Yards Maintenance Buildings Ventilation	Area Square Feet	Air Chgs/Hour ACH	Ventilation CFM	Number of Fans	Exh. Fan CFM	Intake Fan CFM
Building #2 Storage Building	12,000	20	80,000	2	40,000	40,000
Building #3 Storage Building	10,000	20	66,667	3	22,222	22,222
Building #6 Storage Building	4,400	20	29,333	2	14,667	14,667
Building #7 Maintenance Building	12,600	30	126,000	3	42,000	42,000

BASE BID #1: BUILDINGS #2, #3, #6 AND #7 VENTILATION CONTROLS SYSTEM SCOPE OF WORK:

PROVIDE AND INSTALL A COMPLETE GARAGE VENTILATION CONTROL SYSTEM THAT WILL INTERLOCK/ENERGIZE THE EXHAUST FAN AND SUPPLY FAN WITH H-O-A STARTER/CONTROL AND PROVIDE ALL CONTROL/POWER WIRING TO OPEN THE SUPPLY FAN MOTORIZED DAMPER AND ENERGIZE EXHAUST FAN AND SUPPLY FAN AS SHOWN ON THE DRAWINGS.

ALTERNATE BID #1: BUILDINGS #2, #3, #6 AND #7 VENTILATION CONTROLS SYSTEM SCOPE OF WORK:

PROVIDE AND INSTALL A COMPLETE GARAGE VENTILATION CONTROL SYSTEM THAT WILL INTERLOCK/ENERGIZE THE EXHAUST FAN AND SUPPLY FAN WHEN CARBON MONOXIDE OR NITROGEN OXIDE SENSORS DETECT LEVELS ABOVE SAFE SETPOINTS. PROVIDE A HONEYWELL ANALYTICS OR A KELE CONTROLS OR INTEC CONTROLS SYSTEM. PROVIDE ALL NECESSARY RELAYS, HOA STARTER FAN CONTROLS, PANELS AND ALL CONTROL WIRING FOR A COMPLETE AND OPERATING EXHAUST/SUPPLY FAN SYSTEM. ALL WORK SHALL COMPLY WITH ALL LOCAL, STATE AND FEDERAL CODES. OBTAIN AND PAY FOR ALL NECESSARY PERMITS AND FEES. CONTROL SYSTEM WILL ENERGIZE THE SUPPLY FAN DAMPER TO OPEN AND ENERGIZE EXHAUST FAN AND SUPPLY FAN AS SHOWN ON THE DRAWINGS.

Table 1		
	Carbon Monoxide	Nitrogen Dioxide
OSHA[1]	50 ppm 8 hr. TWA[4]	5 ppm ceiling limit
ACGIH[2]	25 ppm TWA[4]	3 ppm TWA, 5 ppm STEL[5]
NIOSH[3]	35 ppm 8hr. TWA[4] 200 ppm ceiling limit	1 ppm STEL[5]

[1] **OSHA -** Occupational Safety and Health Administration (U.S. Dept. of Labor)
[2] **ACGIH** - American Conference of Governmental Industrial Hygienists
[3] **NIOSH** - National Institute for Occpational Safety and Health (U.S. Dept of Health and Human Services)
[4] **TWA** - Time Weighted Average - Example calculation of 8 hour TWA: Assume 2 hours exposure at 75 ppm, 2 hour exposure at 45 ppm, 4 hours exposure at 20 ppm.

NORTH (Building)

CITY YARDS MAINTENANCE FACILITY: RENOVATION AND ADDITIONS
301 EAST CORK ST.
WINCHESTER, VIRGINIA
22601

ARCHITECT:
GDA

Seal

PAINTER-LEWIS, P.L.C.
817 CEDAR CREEK GRADE, SUITE 120
WINCHESTER, VIRGINIA 22601
Telephone: (540) 662-5792
Facsimile: (540) 662-5793
Email: office@painterlewis.com
CONSULTING ENGINEERS

COMMONWEALTH OF VIRGINIA
TIMOTHY G. PAINTER
Lic. No. 018260
PROFESSIONAL ENGINEER

M.E.P. ENGINEERS:
CDi
Comfort Designs Inc.
620 Pennsylvania Avenue
Winchester, VA 22604
540 665-2846

Seal
COMMONWEALTH OF VIRGINIA
ROGER L. CATLETT
Lic. No. 010537
8/5/2019
PROFESSIONAL ENGINEER

ISSUE/REVISIONS:

DRAWING TITLE:
PHASE I & II GENERAL SCOPE

SHEET TITLE:
SCHEDULES & DETAILS

DATE: AUGUST 5, 2019
PROJECT NO.: 1801014
SCALE: AS NOTED
SHEET:
M1.1

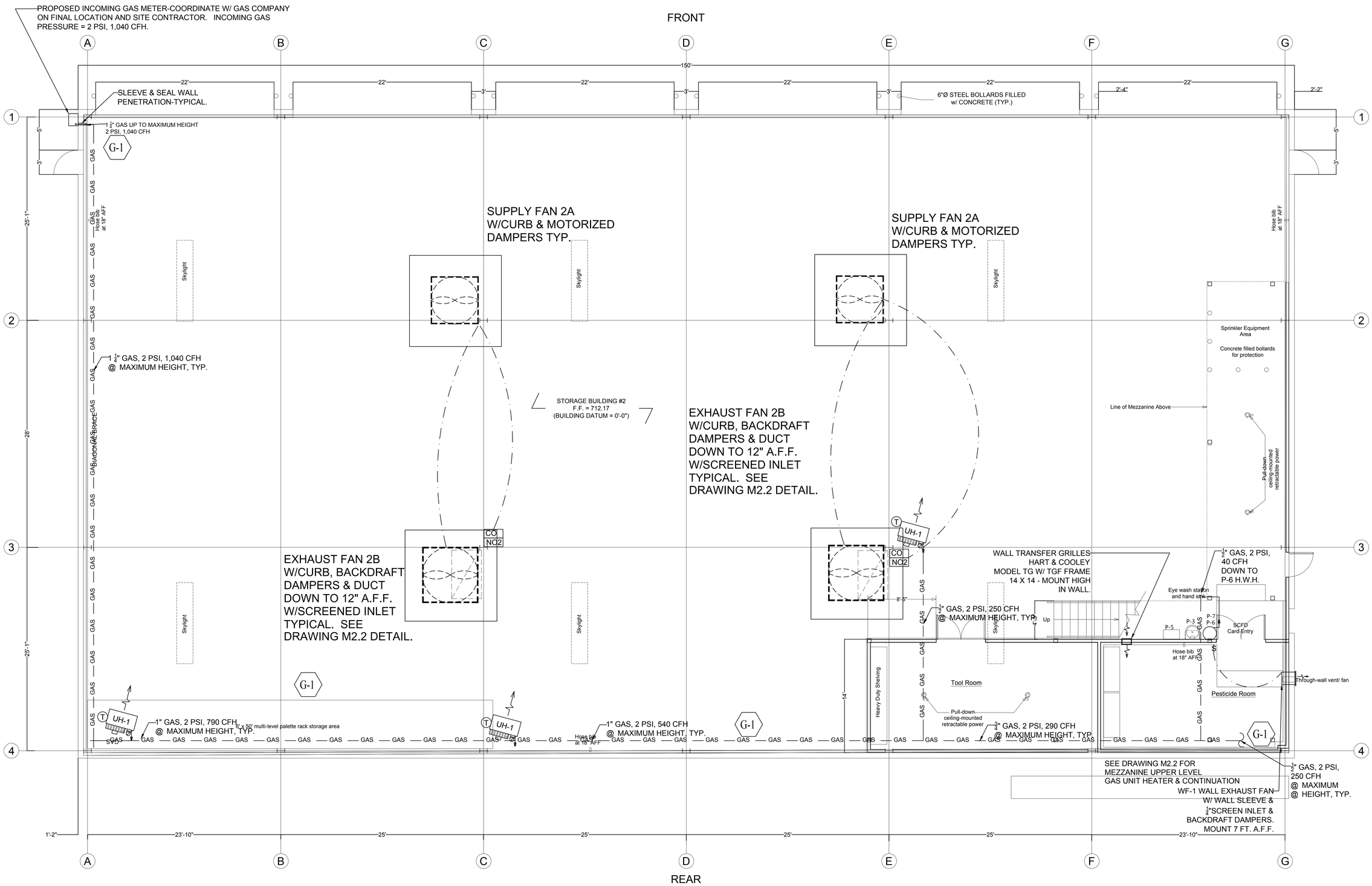

NOT TO SCALE

MECHANICAL VENTILATION 2015 VIRGINIA (INTERNATIONAL) MECHANICAL CODE TABLE 403.3.1.1 MINIMUM VENTILATION RATES:
REPAIR GARAGES = 12,000 S.F. X 0.75 CFM/S.F. = 9,000 CFM MINIMUM

TWO EXHAUST FANS PROVIDED 2 X 40,000 CFM = 80,000 CFM.

BUILDING #2: MECHANICAL & GAS PLAN (PHASE I)

SCALE: 3/16"=1'-0"

NORTH (Building)

CITY YARDS MAINTENANCE FACILITY: RENOVATION AND ADDITIONS
301 East Cork St.
Winchester, Virginia
22601

ARCHITECT:
GDA Group 1 Architecture & Interiors, P.C.
Architecture Planning Interiors Landscape
Lisa DeFilippo lisa@GDAgroup.com • GDAdu.com
325 Megerian Lane Gerrardstown, WV 25420 304.267.5720
10 West Boscawen Street Winchester, VA 22601 540.773.1200

Seal

PAINTER-LEWIS, P.L.C.
CONSULTING ENGINEERS
817 CEDAR CREEK GRADE, SUITE 120
WINCHESTER, VIRGINIA 22601
Telephone: (540) 662-5792
Facsimile: (540) 662-5793
Email: office@painterlewis.com

COMMONWEALTH OF VIRGINIA
TIMOTHY C. PAINTER
Lic. No. 018260
PROFESSIONAL ENGINEER

M.E.P. ENGINEERS:
CDi
Comfort Designs Inc.
620 Pennsylvania Avenue
Winchester, VA 22604
540 665-2846

Seal
COMMONWEALTH OF VIRGINIA
ROGER L. CATLETT
Lic. No. 010537
8/5/2019
PROFESSIONAL ENGINEER

ISSUE/REVISIONS:

DRAWING TITLE:
PHASE I
BUILDING #2

SHEET TITLE:
MECHANICAL & GAS PLAN

DATE:	AUGUST 5, 2019
PROJECT NO.:	1801014
SCALE:	AS NOTED
SHEET:	M2.1

NATURAL GAS CONNECTED LOAD

MARK	UNIT DESCRIPTION	MFR OR EQUAL	MODEL	INPUT BTUH
UH-1	UNIT HEATER	MODINE	PTS-250	250,000
UH-1	UNIT HEATER	MODINE	PTS-250	250,000
UH-1	UNIT HEATER	MODINE	PTS-250	250,000
UH-1	UNIT HEATER	MODINE	PTS-250	250,000
P-6	HOT WATER HEATER	A.O. SMITH	GPVL-40	40,000

TOTAL ESTIMATED CONNECTED GAS LOAD = 1,040,000 BTUH
TOTAL ESTIMATED CONNECTED GAS LOAD = 1,040 CFH

NATURAL GAS PIPE SIZING BASED ON 2015 VIRGINIA FUEL GAS CODE, TABLE 402.4(5), INLET 2.0 PSI PRESSURE W/ 1.0 PSI PRESSURE DROP, GAS = 0.60 SPECIFIC GRAVITY, SCHEDULE 40 BLACK IRON PIPE, AND 250 FT. (1000 BTUH = 1 CFH)

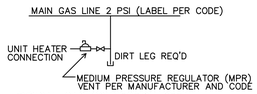

TYPICAL GAS CONNECTION DETAIL
NOT TO SCALE

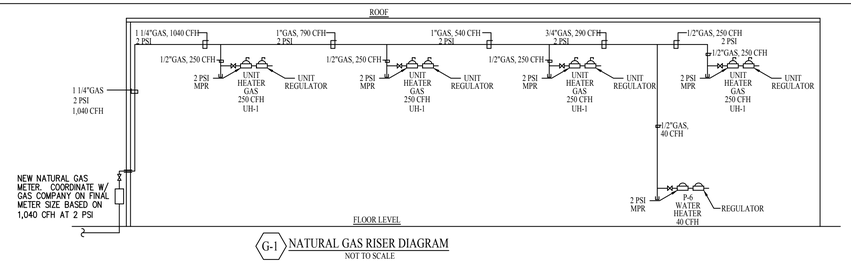

G-1 NATURAL GAS RISER DIAGRAM
NOT TO SCALE

MSAC CONTROL WIRING

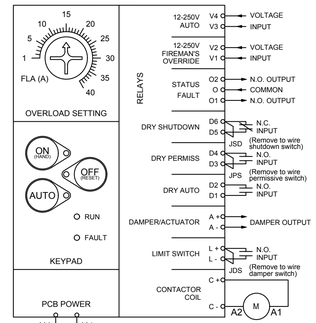

FAN 2A & 2B STARTER DETAIL
N.T.S.

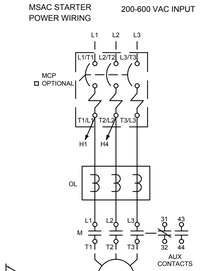

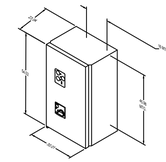

EQUIPMENT SCHEDULE

Wall Exhaust Fan- Greenheck or Equal — MARK: WF-1

Qty	Greenheck Model	Volume (CFM)	External SP (in wg)	FRPM	Operating Power (hp)	Weight (Lb.)	Motor Information: Size (hp)	V/C/P	Encl	Motor RPM	Windings	FLA
1	CBF-205-QD	300	0.25 0.25	2,890	NA	20	0.1609	115/60/1	OP	3300	1	4.4

OPTIONS AND ACCESSORIES
Solid State Speed Control, 6 Amp, Shipped Loose, wall sleeve, and backdraft dampers in wall sleeve.

Propeller Hooded Roof Belt Drive Supply Filtered Fan - Greenheck or Equal

MARK INFORMATION: QTY	MARK	MODEL	FAN INFORMATION: VOLUME (CFM)	TOTAL EXTERNAL SP (IN WG)	FAN RPM	OPERATING POWER (HP)	WEIGHT (LB.)	MOTOR INFORMATION: SIZE (HP)	V/C/P	ENCLOSURE	MOTOR RPM	WINDINGS	NEC FLA*
2	2A	RBCF-3H60-75	40,000	0.5	694	8.89	1400	7.5	208/60/3	OP	1725	1	24.2

*NEC FLA - Based on tables 150 or 148 of National Electrical Code 2002. Actual motor FLA may vary, for sizing thermal overload, consult factory.

2A : SELECTED OPTIONS AND ACCESSORIES
UL/cUL 705 Listed - "Power Ventilators"
Switch, NEMA-1, Toggle, Shipped with Unit
Cast Aluminum Propeller
Galvanized Construction
Damper Shipped Loose, VCD-20-PB-60X60, Not Coated
Damper Actuator (MS4120F1204), 208 VAC Actuated w/ 115 VAC Transformer, End Switch
Bearings with Grease Fittings

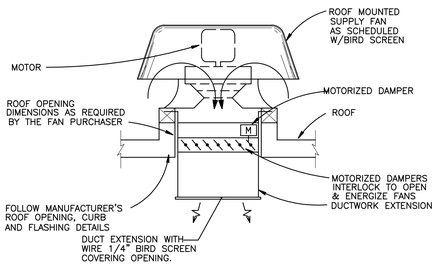

ROOF MOUNTED SUPPLY FAN 2A DETAIL
N.T.S.

Propeller Hooded Roof Belt Drive Exhaust Fan - Greenheck or Equal

MARK INFORMATION: QTY	MARK	MODEL	FAN INFORMATION: VOLUME (CFM)	TOTAL EXTERNAL SP (IN WG)	FAN RPM	OPERATING POWER (HP)	WEIGHT (LB.)	MOTOR INFORMATION: SIZE (HP)	V/C/P	ENCLOSURE	MOTOR RPM	WINDINGS	NEC FLA*
2	2B	RBE-3L72-150	40,000	0.75	457	12.91	1477	15	208/60/3	OP	1725	1	46.2

*NEC FLA - Based on tables 150 or 148 of National Electrical Code 2002. Actual motor FLA may vary, for sizing thermal overload, consult factory.

2B : SELECTED OPTIONS AND ACCESSORIES
No UL Listing
Switch, NEMA-1, Toggle, Shipped with Unit
Steel Propeller
Galvanized Construction
Damper Shipped Loose, WD-100-PB-72X72, Gravity Operated, Not Coated
Bearings with Grease Fittings

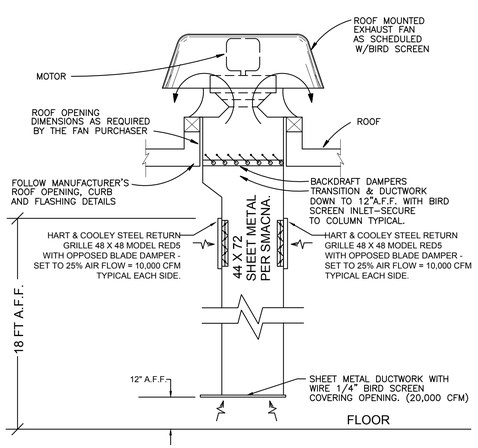

ROOF MOUNTED EXHAUST FAN 2B DETAIL
N.T.S.

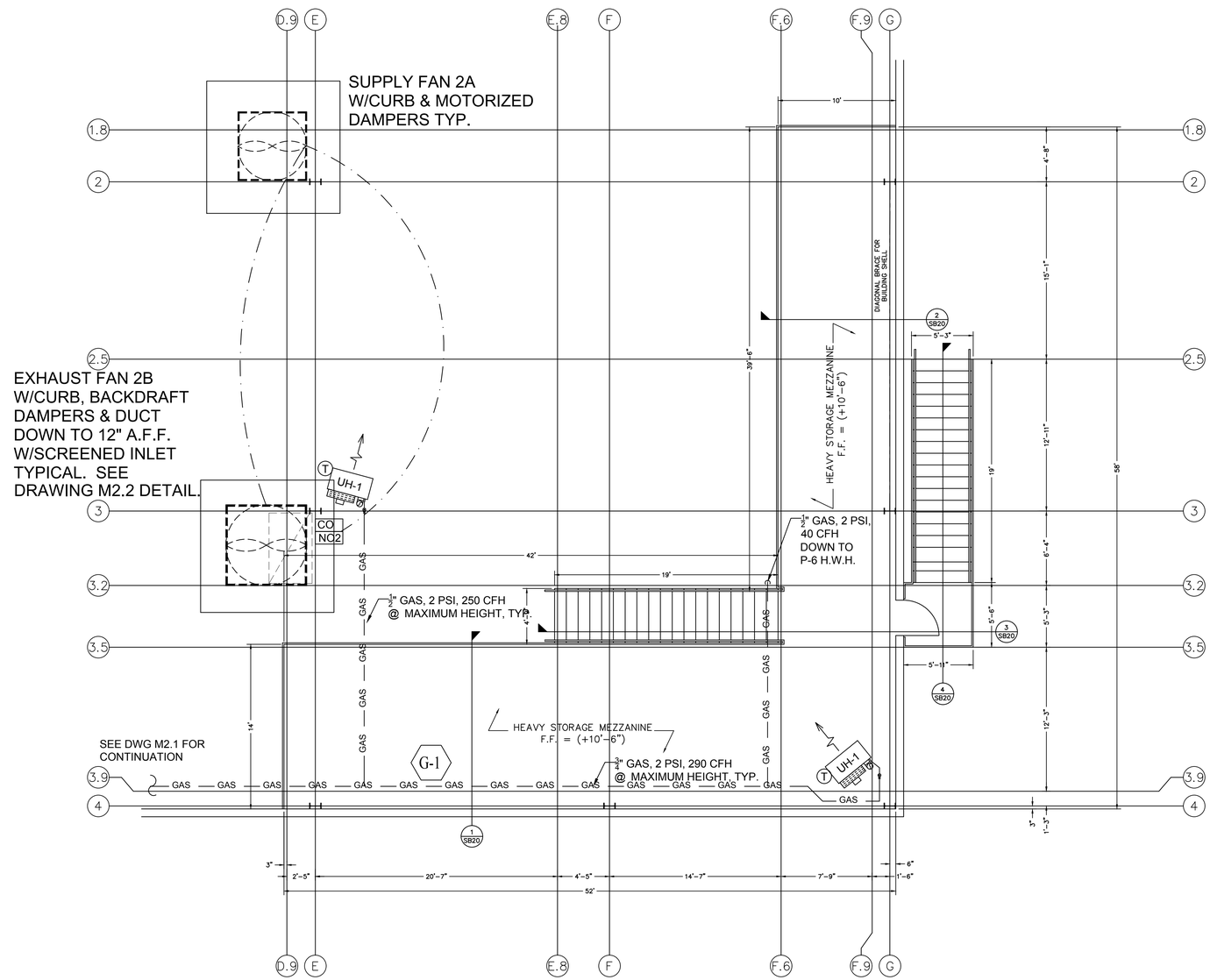

BUILDING #2: MEZZANINE MECHANICAL & GAS PLAN (PHASE I)
SCALE: 1/16"=1'-0"

NORTH (Building)

CITY YARDS MAINTENANCE FACILITY: RENOVATION AND ADDITIONS
301 EAST CORK ST.
WINCHESTER, VIRGINIA 22601

ARCHITECT:
GDA

PAINTER-LEWIS, P.L.C.
817 CEDAR CREEK GRADE, SUITE 120
WINCHESTER, VIRGINIA 22601
Telephone: (540) 662-5792
Facsimile: (540) 662-5793
Email: office@painterlewis.com
CONSULTING ENGINEERS

COMMONWEALTH OF VIRGINIA
TIMOTHY G. PAINTER
Lic. No. 018260
PROFESSIONAL ENGINEER

M.E.P. ENGINEERS:
CDi
Comfort Designs Inc.
620 Pennsylvania Avenue
Winchester, VA 22604
540 665-2846

Seal
COMMONWEALTH OF VIRGINIA
ROGER L. CATLETT
Lic. No. 010537
8/5/2019
PROFESSIONAL ENGINEER

ISSUE/REVISIONS:

DRAWING TITLE: PHASE I BUILDING #2
SHEET TITLE: MEZZANINE PLAN & DETAILS
DATE: AUGUST 5, 2019
PROJECT NO.: 1801014
SCALE: AS NOTED
SHEET: M2.2

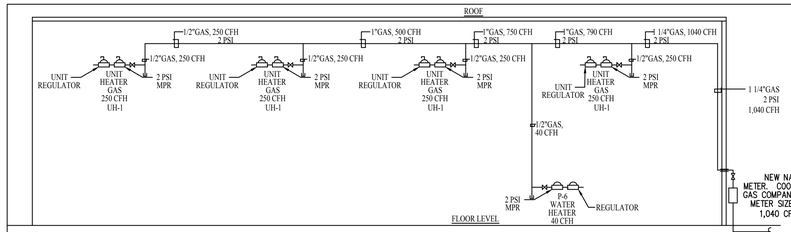

G-2 NATURAL GAS RISER DIAGRAM
NOT TO SCALE

NATURAL GAS CONNECTED LOAD

MARK	UNIT DESCRIPTION	MFR OR EQUAL	MODEL	INPUT BTUH
UH–1	UNIT HEATER	MODINE	PTS–250	250,000
UH–1	UNIT HEATER	MODINE	PTS–250	250,000
UH–1	UNIT HEATER	MODINE	PTS–250	250,000
UH–1	UNIT HEATER	MODINE	PTS–250	250,000
P–6	HOT WATER HEATER	A.O. SMITH	GTVL–40	40,000

TOTAL ESTIMATED CONNECTED GAS LOAD = 1,040,000 BTUH
TOTAL ESTIMATED CONNECTED GAS LOAD = 1,040 CFH

NATURAL GAS PIPE SIZING BASED ON 2015 VIRGINIA FUEL GAS CODE, TABLE 402.4(5), INLET 2.0 PSI PRESSURE W/ 1.0 PSI PRESSURE DROP, GAS = 0.60 SPECIFIC GRAVITY, SCHEDULE 40 BLACK IRON PIPE, AND 300 FT. (1000 BTUH = 1 CFH)

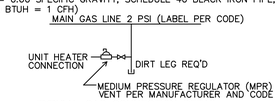

TYPICAL GAS CONNECTION DETAIL
NOT TO SCALE

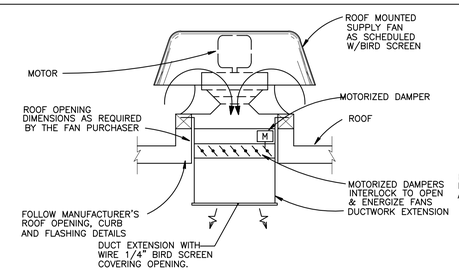

ROOF MOUNTED SUPPLY FAN 3A DETAIL
N.T.S.

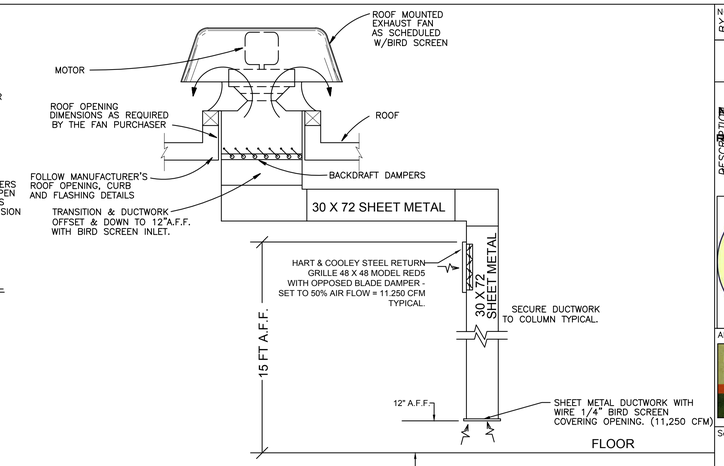

ROOF MOUNTED EXHAUST FAN 3B DETAIL
N.T.S.

SPECIFICATIONS: MSZ-GL24NA & MUZ-GL24NA

FC-1/HP-1 & FC-2/HP-2

COOLING	Maximum Capacity	Btu/h	31,400
	Rated Capacity	Btu/h	22,500
	Minimum Capacity	Btu/h	8,200
HEATING	Maximum Capacity	Btu/h	36,900
	Rated Capacity	Btu/h	27,600
Heating at 47°F[2]	Minimum Capacity	Btu/h	7,500
Efficiency	SEER		20.5
	EER[1]		12.5
	HSPF (IV)		10.0
	COP at 47°F[2]		3.46
Electrical	Voltage: Indoor - Outdoor, S1-S2	V AC	208 / 230
	Voltage: Indoor - Outdoor, S2-S3	V DC	24
	Voltage: Indoor - Remote Controller		Wireless Type
	Recommended Fuse/Breaker Size	A	20
	Recommended Wire Size (Indoor - Outdoor)	AWG	14
	MCA	A	1
	MOCP	A	20
Advanced Blue Diamond Mini Condensate Pump w/ Reservoir & Sensor (208/230V) [recommended]			X X87-721 - 208/230V
Backlit, Wall-mounted, Wireless Controller			X MHK1

EQUIPMENT SCHEDULE

Wall Exhaust Fan- Greenheck or Equal — MARK: WF-1

Qty	Greenheck Model	Volume (CFM)	External SP (in wg) / Total SP (in wg)	FRPM	Operating Power (hp)	Weight (Lb.)	Motor Information: Size (hp)	V/C/P	Encl.	Motor RPM	Windings	FLA
1	CBF-205-QD	300	0.25 0.25	2,890	NA	20	0.1609	115/60/1	OP	3300	1	4.4

OPTIONS AND ACCESSORIES
Solid State Speed Control, 6 Amp, Shipped Loose, wall sleeve, and backdraft dampers in wall sleeve.

MECHANICAL VENTILATION 2015 VIRGINIA (INTERNATIONAL) MECHANICAL CODE TABLE 403.3.1.1 MINIMUM VENTILATION RATES:

REPAIR GARAGES = 10,000 S.F. X 0.75 CFM/S.F. = 7,500 CFM MINIMUM

TWO EXHAUST FANS PROVIDED 2 X 22,500 CFM = 45,000 CFM.

Propeller Hooded Roof Belt Drive Supply Filtered Fan

MARK INFORMATION			FAN INFORMATION					MOTOR INFORMATION					
QTY	MARK	MODEL	VOLUME (CFM)	TOTAL EXTERNAL SP (IN WG)	FAN RPM	OPERATING POWER (HP)	WEIGHT (LB.)	SIZE (HP)	V/C/P	ENCLOSURE	MOTOR RPM	WINDINGS	NEC FLA*
2	3A	RBCF-3H60-50	22,500	0.5	552	4.2	1360	5	208/60/3	OP	1725	1	16.7

*NEC FLA - Based on tables 150 or 148 of National Electrical Code 2002. Actual motor FLA may vary, for sizing thermal overload, consult factory.

3A : SELECTED OPTIONS AND ACCESSORIES
UL/cUL 705 Listed - "Power Ventilators"
Switch, NEMA-1, Toggle, Shipped with Unit
Cast Aluminum Propeller
Galvanized Construction
Damper Shipped Loose, VCD-20-PB-60X60, Not Coated
Damper Actuator (MS4120F1204), 208 VAC Actuated w/ 115 VAC Transformer, End Switch
Bearings with Grease Fittings

Propeller Hooded Roof Belt Drive Exhaust Fan

MARK INFORMATION			FAN INFORMATION					MOTOR INFORMATION					
QTY	MARK	MODEL	VOLUME (CFM)	TOTAL EXTERNAL SP (IN WG)	FAN RPM	OPERATING POWER (HP)	WEIGHT (LB.)	SIZE (HP)	V/C/P	ENCLOSURE	MOTOR RPM	WINDINGS	NEC FLA*
2	3B	RBE-3L72-75	22,500	0.75	389	8.57	1360	7.5	208/60/3	OP	1725	1	24.2

*NEC FLA - Based on tables 150 or 148 of National Electrical Code 2002. Actual motor FLA may vary, for sizing thermal overload, consult factory.

3B : SELECTED OPTIONS AND ACCESSORIES
No UL Listing
Switch, NEMA-1, Toggle, Shipped with Unit
Steel Propeller
Galvanized Construction
Damper Shipped Loose, WD-100-PB-72X72, Gravity Operated, Not Coated
Bearings with Grease Fittings

MSAC CONTROL WIRING

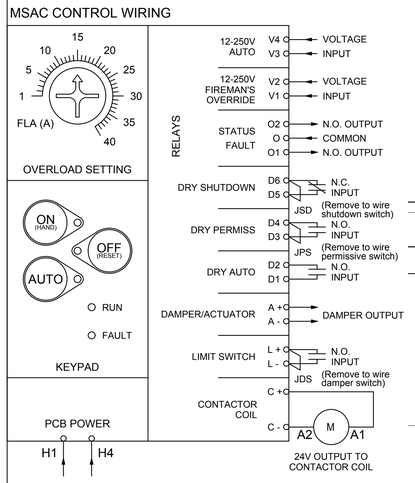

MSAC STARTER POWER WIRING

200-600 VAC INPUT

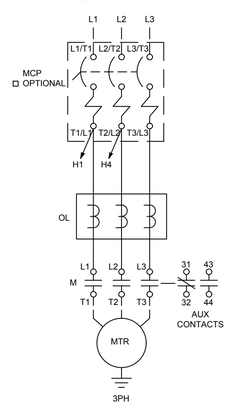

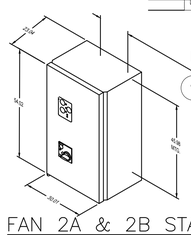

FAN 2A & 2B STARTER DETAIL
N.T.S.

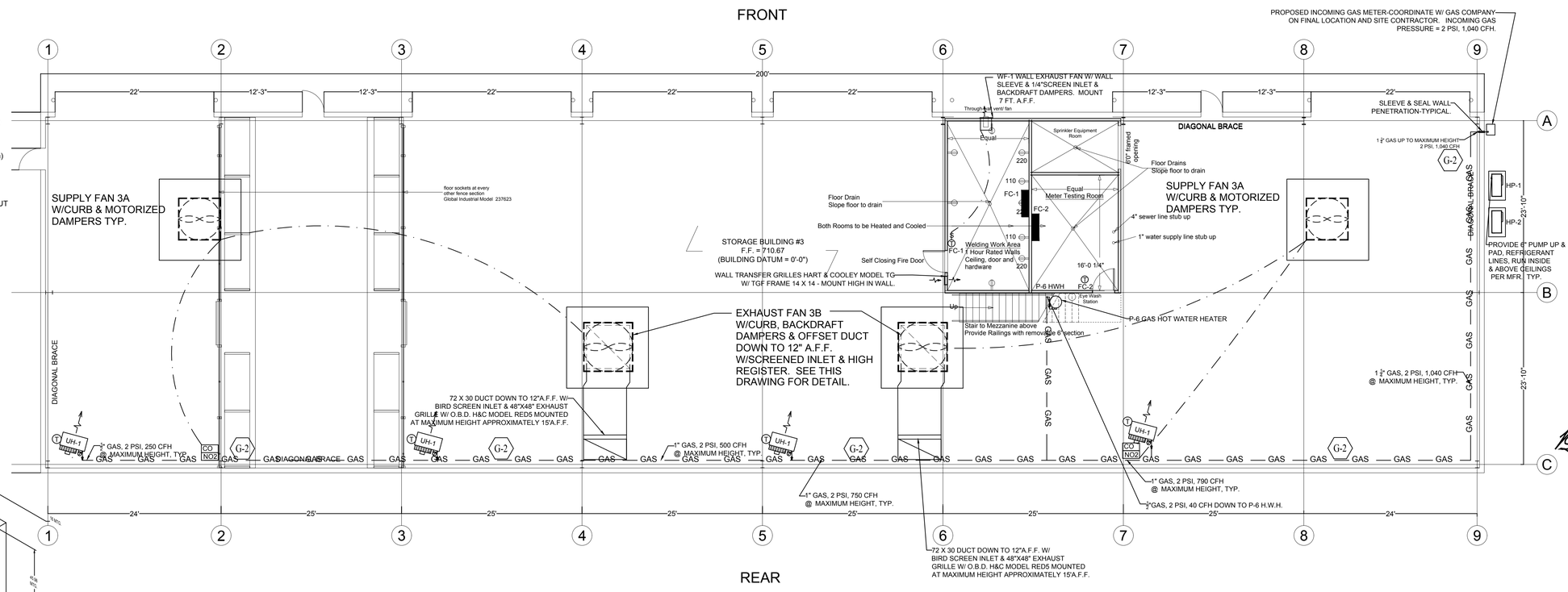

BUILDING #3: MECHANICAL & GAS PLAN (PHASE I)
SCALE 1/8"=1'-0"

NORTH (Building)

BY:

DESCRIPTION:

CITY YARDS MAINTENANCE FACILITY: RENOVATION AND ADDITIONS
201 EAST CORK ST.
WINCHESTER, VIRGINIA
22601

ARCHITECT:

GDA Architecture Planning Interiors Landscape
Gruver & Duff Offer Architects pllc
Use Duff Offer Pro#EZPassport • GDApllc.com
151 Regional Ave Gerrardstown WV 25420 304.267.7112
17 Fort Evanston Place Winchester VA 22601 540.773.2126

Seal

PAINTER-LEWIS, P.L.C.
817 CEDAR CREEK GRADE, SUITE 120
WINCHESTER, VIRGINIA 22601
Telephone: (540) 662–5792
Facsimile: (540) 662–5793
Email: office@painterlewis.com
CONSULTING ENGINEERS

COMMONWEALTH OF VIRGINIA
TIMOTHY G. PAINTER
Lic. No. 018260
PROFESSIONAL ENGINEER

M.E.P. ENGINEERS:

CDi
Comfort Designs Inc.
620 Pennsylvania Avenue
Winchester, VA 22604
540 665–2846

Seal

COMMONWEALTH OF VIRGINIA
ROGER L. CATLETT
Lic. No. 010537
8/5/2019
PROFESSIONAL ENGINEER

ISSUE/REVISIONS:

DRAWING TITLE:
PHASE I
BUILDING #3

SHEET TITLE:
MECHANICAL & GAS PLAN & DETAILS

DATE: AUGUST 5, 2019
PROJECT NO.: 1801014
SCALE: AS NOTED
SHEET: M2.3

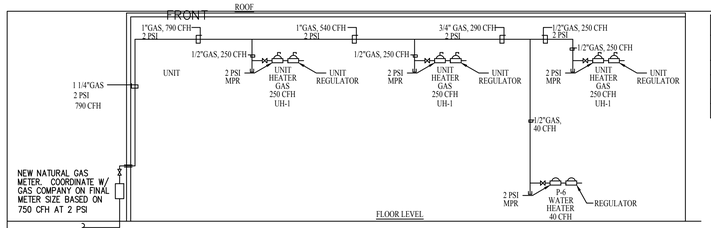

G-3 NATURAL GAS RISER DIAGRAM
NOT TO SCALE

NATURAL GAS CONNECTED LOAD				
MARK	UNIT DESCRIPTION	MFR OR EQUAL	MODEL	INPUT BTUH
UH-1	UNIT HEATER	MODINE	PTS-250	250,000
UH-1	UNIT HEATER	MODINE	PTS-250	250,000
UH-1	UNIT HEATER	MODINE	PTS-250	250,000
P-6	WATER HEATER	A.O. SMITH	GPVL-40	40,000

TOTAL ESTIMATED CONNECTED GAS LOAD = 790,000 BTUH
TOTAL ESTIMATED CONNECTED GAS LOAD = 790 CFH

NATURAL GAS PIPE SIZING BASED ON 2015 VIRGINIA FUEL GAS CODE, TABLE 402.4(5), INLET 2.0 PSI PRESSURE W/ 1.0 PSI PRESSURE DROP, GAS = 0.60 SPECIFIC GRAVITY, SCHEDULE 40 BLACK IRON PIPE, AND 200 FT. (1000 BTUH = 1 CFH)

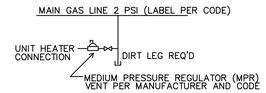

TYPICAL GAS CONNECTION DETAIL
NOT TO SCALE

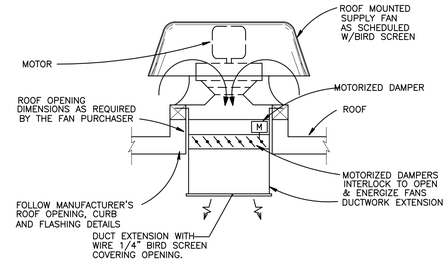

ROOF MOUNTED SUPPLY FAN 6A DETAIL
N.T.S.

MECHANICAL VENTILATION 2015 VIRGINIA (INTERNATIONAL) MECHANICAL CODE TABLE 403.3.1.1 MINIMUM VENTILATION RATES:

REPAIR GARAGES = 4,400 S.F. X 0.75 CFM/S.F. = 3,300 CFM MINIMUM

TWO EXHAUST FANS PROVIDED 2 X 15,000 CFM = 30,000 CFM.

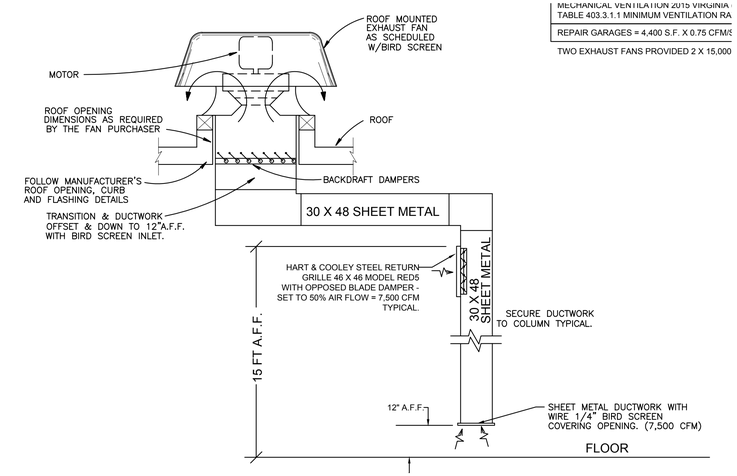

ROOF MOUNTED EXHAUST FAN 6B DETAIL
N.T.S.

MECHANICAL VENTILATION 2015 VIRGINIA
TABLE 403.3.1.1 MINIMUM VENTILATION RA

REPAIR GARAGES = 4,400 S.F. X 0.75 CFM/S

TWO EXHAUST FANS PROVIDED 2 X 15,000

MSAC CONTROL WIRING

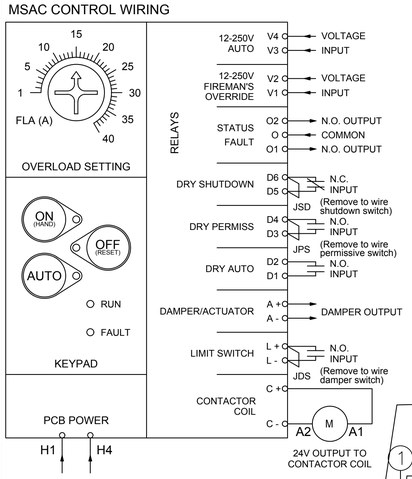

Propeller Hooded Roof Belt Drive Supply Filtered Fan

MARK INFORMATION			FAN INFORMATION						MOTOR INFORMATION					
QTY	MARK	MODEL	VOLUME (CFM)	TOTAL EXTERNAL SP (IN WG)	FAN RPM	OPERATING POWER (HP)	WEIGHT (LB.)	SIZE (HP)	V/C/P	ENCLOSURE	MOTOR RPM	WINDINGS	NEC FLA*
2	6A	RBCF-3H60-50	15,000	0.5	496	2.81	1360	5	208/60/3	OP	1725	1	16.7

*NEC FLA - Based on tables 150 or 148 of National Electrical Code 2002. Actual motor FLA may vary, for sizing thermal overload, consult factory.

6A : SELECTED OPTIONS AND ACCESSORIES
UL/cUL 705 Listed - "Power Ventilators"
Switch, NEMA-1, Toggle, Shipped with Unit
Cast Aluminum Propeller
Galvanized Construction
Damper Shipped Loose, VCD-20-PB-60X60, Not Coated
Damper Actuator (MS4120F1204), 208 VAC Actuated w/ 115 VAC Transformer, End Switch
Bearings with Grease Fittings

Propeller Hooded Roof Belt Drive Exhaust Fan

MARK INFORMATION			FAN INFORMATION					MOTOR INFORMATION					
QTY	MARK	MODEL	VOLUME (CFM)	TOTAL EXTERNAL SP (IN WG)	FAN RPM	OPERATING POWER (HP)	WEIGHT (LB.)	SIZE (HP)	V/C/P	ENCLOSURE	MOTOR RPM	WINDINGS	NEC FLA*
2	6B	RBE-2H48-50	15,000	0.75	648	4.31	807	5	208/60/3	OP	1725	1	16.7

*NEC FLA - Based on tables 150 or 148 of National Electrical Code 2002. Actual motor FLA may vary, for sizing thermal overload, consult factory.

6B : SELECTED OPTIONS AND ACCESSORIES
No UL Listing
Switch, NEMA-1, Toggle, Shipped with Unit
Steel Propeller
Galvanized Construction
Damper Shipped Loose, WD-100-PB-48X48, Gravity Operated, Not Coated
Bearings with Grease Fittings

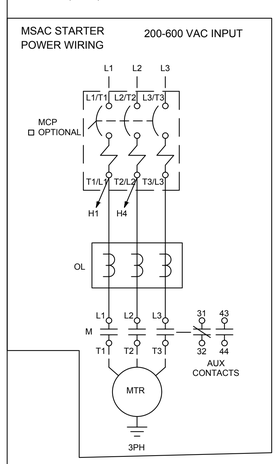

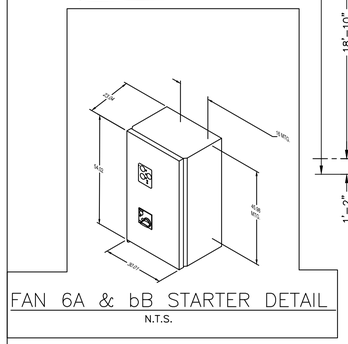

FAN 6A & bB STARTER DETAIL
N.T.S.

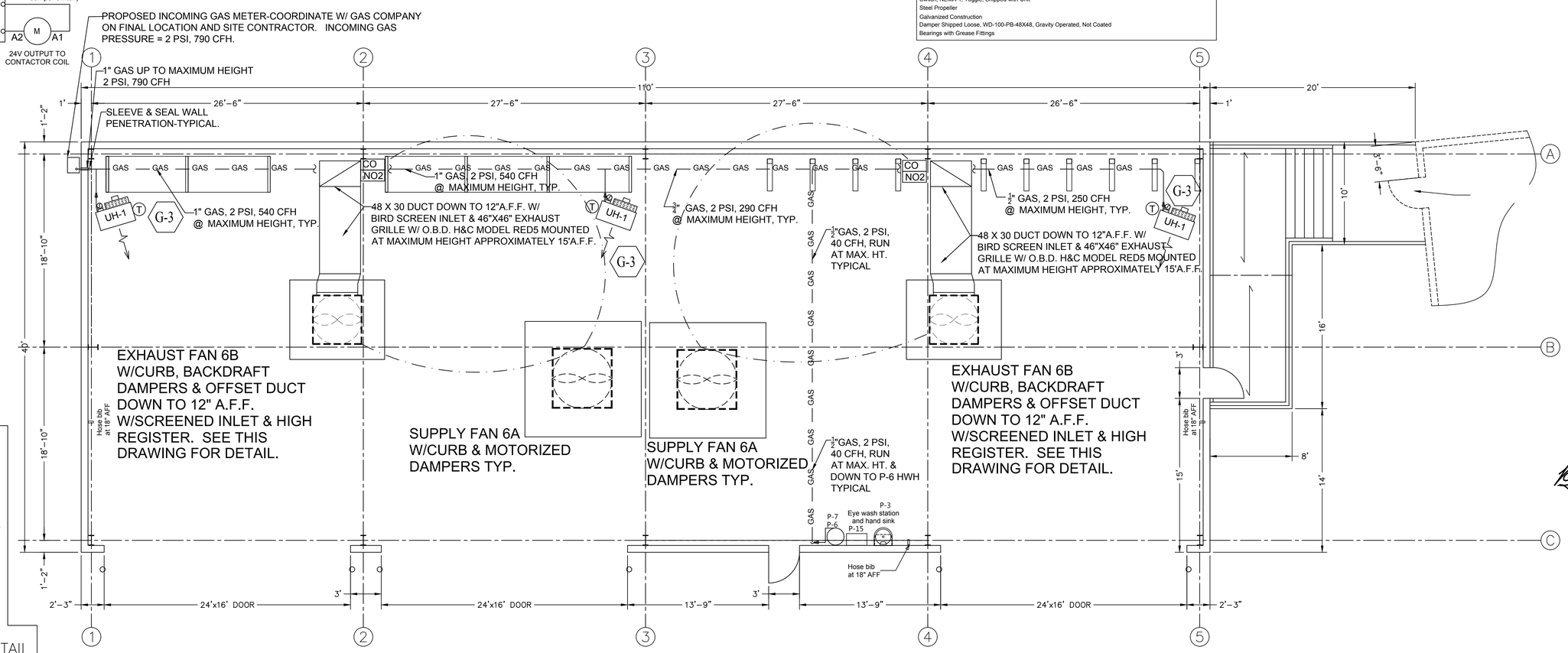

BUILDING #6: MECHANICAL & GAS PLAN (PHASE I)
SCALE: 3/16"=1'-0"

NORTH (Building)

CITY YARDS MAINTENANCE FACILITY: RENOVATION AND ADDITIONS
301 EAST CORK ST.
WINCHESTER, VIRGINIA
22601

ARCHITECT:
GDA

Seal

PAINTER-LEWIS, P.L.C.
817 CEDAR CREEK GRADE, SUITE 120
WINCHESTER, VIRGINIA 22601
Telephone: (540) 662-5792
Facsimile: (540) 662-5793
Email: office@painterlewis.com
CONSULTING ENGINEERS

COMMONWEALTH OF VIRGINIA
TIMOTHY G. PAINTER
Lic. No. 018260
PROFESSIONAL ENGINEER

M.E.P. ENGINEERS:
CDi
Comfort Designs Inc.
620 Pennsylvania Avenue
Winchester, VA 22604
540 665-2846

Seal
COMMONWEALTH OF VIRGINIA
ROGER L. CATLETT
Lic. No. 010537
8/5/2019
PROFESSIONAL ENGINEER

ISSUE/REVISIONS:

DRAWING TITLE:
PHASE I
BUILDING #6

SHEET TITLE:
MECHANICAL & GAS PLAN & DETAILS

DATE:	AUGUST 5, 2019
PROJECT NO.:	1801014
SCALE:	AS NOTED
SHEET:	M2.4

Propeller Hooded Roof Belt Drive Supply Filtered Fan

MARK INFORMATION		FAN INFORMATION						MOTOR INFORMATION					
QTY	MARK	MODEL	VOLUME (CFM)	TOTAL EXTERNAL SP (IN WG)	FAN RPM	OPERATING POWER (HP)	WEIGHT (LB.)	SIZE (HP)	V/C/P	ENCLOSURE	MOTOR RPM	WINDINGS	NEC FLA*
3	FAN	RBCF-3H72-150	42,000	0.5	702	13.71	1791	15	460/60/3	OP	1725	1	21

*NEC FLA - Based on tables 150 or 148 of National Electrical Code 2002. Actual motor FLA may vary, for sizing thermal overload, consult factory.

7A : SELECTED OPTIONS AND ACCESSORIES
UL/cUL 705 Listed - "Power Ventilators"
Switch, NEMA-1, Toggle, Shipped with Unit
Cast Aluminum Propeller
Galvanized Construction
Damper Shipped Loose, VCD-20-PB-72X72, Not Coated
Damper Actuator (MS4120F1204), 460 VAC Actuated w/ 115 VAC Transformer, End Switch
Bearings with Grease Fittings

Propeller Hooded Roof Belt Drive Exhaust Fan

MARK INFORMATION		FAN INFORMATION						MOTOR INFORMATION					
QTY	MARK	MODEL	VOLUME (CFM)	TOTAL EXTERNAL SP (IN WG)	FAN RPM	OPERATING POWER (HP)	WEIGHT (LB.)	SIZE (HP)	V/C/P	ENCLOSURE	MOTOR RPM	WINDINGS	NEC FLA*
3	7B	RBE-3L72-150	42,000	0.75	465	13.55	1478	15	460/60/3	OP	1725	1	21

*NEC FLA - Based on tables 150 or 148 of National Electrical Code 2002. Actual motor FLA may vary, for sizing thermal overload, consult factory.

7B : SELECTED OPTIONS AND ACCESSORIES
No UL Listing
Switch, NEMA-1, Toggle, Shipped with Unit
Steel Propeller
Galvanized Construction
Damper Shipped Loose, WD-100-PB-72X72, Gravity Operated, Not Coated
Bearings with Grease Fittings

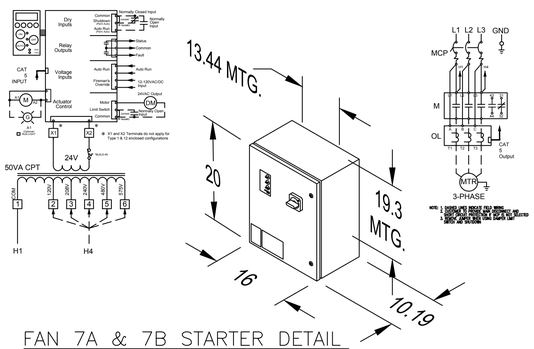

FAN 7A & 7B STARTER DETAIL

N.T.S.

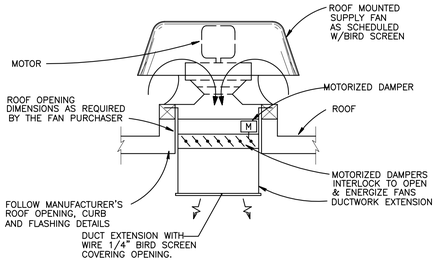

ROOF MOUNTED SUPPLY FAN 7A DETAIL

N.T.S.

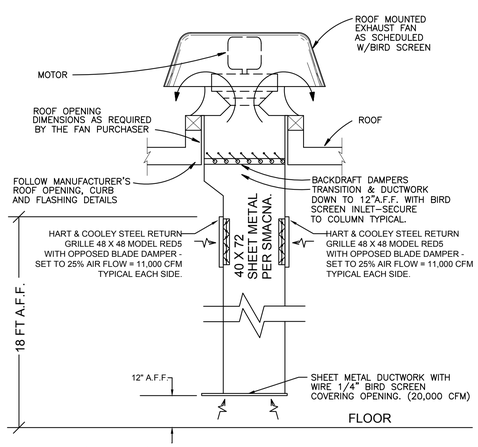

ROOF MOUNTED EXHAUST FAN 7B DETAIL

N.T.S.

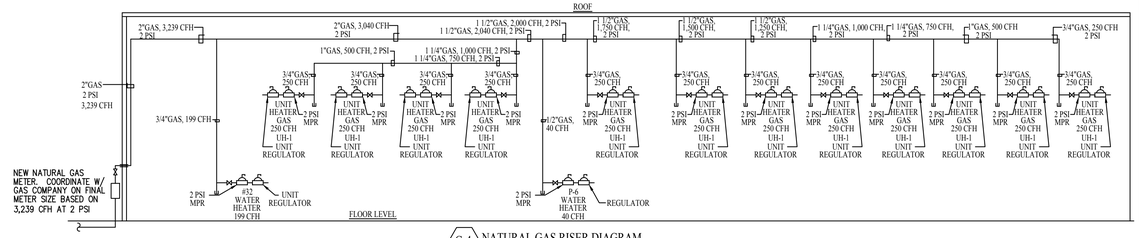

G-4 NATURAL GAS RISER DIAGRAM

NOT TO SCALE

NATURAL GAS CONNECTED LOAD				
MARK	UNIT DESCRIPTION	MFR OR EQUAL	MODEL	INPUT BTUH
UH-1	UNIT HEATER	MODINE	PTS-250	250,000
UH-1	UNIT HEATER	MODINE	PTS-250	250,000
UH-1	UNIT HEATER	MODINE	PTS-250	250,000
UH-1	UNIT HEATER	MODINE	PTS-250	250,000
UH-1	UNIT HEATER	MODINE	PTS-250	250,000
UH-1	UNIT HEATER	MODINE	PTS-250	250,000
UH-1	UNIT HEATER	MODINE	PTS-250	250,000
UH-1	UNIT HEATER	MODINE	PTS-250	250,000
UH-1	UNIT HEATER	MODINE	PTS-250	250,000
UH-1	UNIT HEATER	MODINE	PTS-250	250,000
UH-1	UNIT HEATER	MODINE	PTS-250	250,000
UH-1	UNIT HEATER	MODINE	PTS-250	250,000
32	WATER HEATER	WASHBAY	D100S-199-3N	199,000
P-6	WATER HEATER	A.O. SMITH	GPVL-40	40,000

TOTAL ESTIMATED CONNECTED GAS LOAD = 3,239,000 BTUH
TOTAL ESTIMATED CONNECTED GAS LOAD = 3,239 CFH

NATURAL GAS PIPE SIZING BASED ON 2015 VIRGINIA FUEL GAS CODE, TABLE 402.4(5), INLET 2.0 PSI PRESSURE W/ 1.0 PSI PRESSURE DROP, GAS = 0.60 SPECIFIC GRAVITY, SCHEDULE 40 BLACK IRON PIPE, AND 300 (1000 BTUH = 1 CFH)

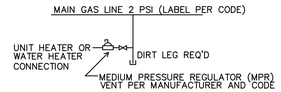

TYPICAL GAS CONNECTION DETAIL

NOT TO SCALE

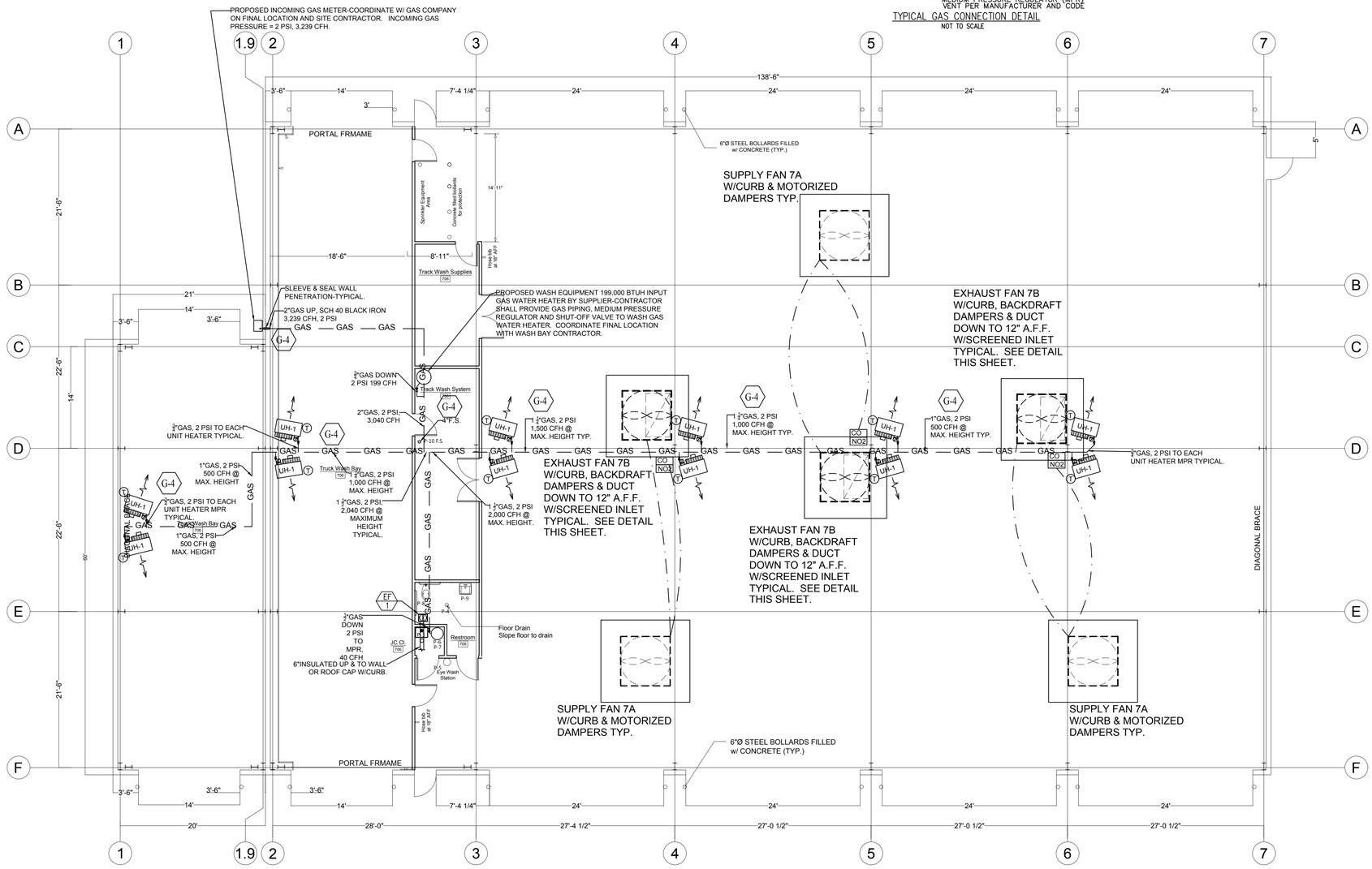

BUILDING #7: MECHANICAL & GAS PLAN (PHASE II)

SCALE 1/8"=1'-0"

NORTH (Building)

CITY YARDS MAINTENANCE FACILITY: RENOVATION AND ADDITIONS
301 EAST CORK ST.
WINCHESTER, VIRGINIA
22601

ARCHITECT:

GDA

Seal

PAINTER-LEWIS, P.L.C.
817 CEDAR CREEK GRADE, SUITE 120
WINCHESTER, VIRGINIA 22601
Telephone: (540) 662-5792
Facsimile: (540) 662-5793
Email: office@painterlewis.com
CONSULTING ENGINEERS

COMMONWEALTH OF VIRGINIA
TIMOTHY G. PAINTER
Lic. No. 018260
PROFESSIONAL ENGINEER

M.E.P. ENGINEERS:

CDi
Comfort Designs Inc.
620 Pennsylvania Avenue
Winchester, VA 22604
540 665-2846

Seal

COMMONWEALTH OF VIRGINIA
ROGER L. CATLETT
Lic. No. 010537
8/5/2019
PROFESSIONAL ENGINEER

ISSUE/REVISIONS:

DRAWING TITLE:
PHASE II
BUILDING #7

SHEET TITLE:
MECHANICAL & GAS PLAN & DETAILS

DATE: AUGUST 5, 2019
PROJECT NO.: 1801014
SCALE: AS NOTED
SHEET:
M2.5

DRAWING INDEX

DRAWING NUMBER	DESCRIPTION
#LY19-019-00	DRAWING INDEX
#LY19-019-01	3D VIEW
#LY19-019-02	PLAN VIEW
#LY19-019-03	SIDE VIEW
#LY19-019-04	END VIEW
#LY19-019-05	PLUMBING SCHEMATIC
#LY19-019-06A	ELECTRICAL LAYOUT
#LY19-019-06B	EQUIPMENT ROOM LAYOUT
#LY19-019-07	EQUIPMENT LAYOUT
#LY19-019-08	PIPING 3D
#LY19-019-09	CONCRETE LAYOUT
#LY19-019-10	UNDERGROUND CONDUITS

System List

Prefix	Description
ACS	Air Compressed System
CPS	Customer Provided System
CSD	Control System Device
DES	Dedicated Electrical System
DET	Detergent System
FWS	Fresh Water System
PHS	PH Control System
ROS	Reverse Osmosis (RO) System
RWS	Reclaim Water System
WCS	Wheel/Chassis System

Component List

Prefix	Description
ACD	Acid Chemical
ALK	Alkaline Chemical
AC	Air Compressor
BL	Blower
BR	Brush
CD	Customer Device
DSP	Distributed I/O Panel
F	Filter
MCP	Main Control Panel
MDP	Main Distribution Panel
OS	Oil Skimmer
P	Pump
PCP	Pneumatic Control Panel
SCP	Slave Control Panel
TK	Tank
WS	Water Softener
WH	Water Heater

Device List

Prefix	Description
AI	Analog Inupt
AO	Analog Outupt
AU	Air Condition Unit
BV	Ball Valve
BFV	Butterfly Valve
CAV	Co-Ax Valve
CXV	Customer Device
CV	Check Valve
DI	Digital Input
DO	Digital Output
ES	Emergency Stop
FI	Flow Rate Indicator
FT	Flow Rate Transmitter
FIT	Flow Rate Transmitter w/Indicator
FV	Flow Regulator
HMI	Touchscreen
HRN	Audible Alarm/Horn
LI	Level Indicator
LT	Level Transmitter
LIT	Level Transmitter w/Indicator
LSHH	High High Level Alarm Sensor
LSH	High Level Alarm Sensor
LSL	Low Level Alarm Sensor
LSLL	Low Low Level Alarm Sensor
NA	Motor Run Status
PB	Push Button
PCV	Pneumatic Control Valve
PHS	Ph Sensor
PI	Pressure Indicator
PIT	Pressure Transmitter w/Indicator
PT	Pressure Transmitter
PV	Pressure Regulator
SPI	Speed Display
SSW	Select Switch
STB	Stobe Light/Visual Annuciator
SV	Solenoid Valve
TI	Temperature Indicator
TIT	Temperature Transmitter/w Indicator
TT	Temperature Transmitter
TTB	Traffric Light, Red/Green
YE	Photoelectric Source Sensor
YES	Photoelectric Receiver Sensor
YEL	Limit Switch
YS	Proximity Sensor
XFM	Transformer
XSS	Motor Start/Stop Switch

P&ID SYMBOL

3-WAY VALVE
ANGLE VALVE
ANTI-FREEZE VALVE
BALL VALVE
BUTTERFLY VALVE
CHECK VALVE
ELE/PNE CONTROL VALVE
GATE VALVE
GLOBE VALVE
FLOAT VALVE
MOTOR VALVE
SOLENOID VALVE
PRESSURE RELIEF VALVE
Y-STRAINER W/VALVE
MIXING VALVE
GROOVED COUPLING
FLOW RESTRICTOR
KNIFE VALVE
FLANGE
UNION
FLOOR DRAIN
AIR VENT
AIR VENT WITH SCREEN
FLEXIBLE HOSE
AIR GAP
FILTER
Air Filter
REDUCER
VENTURI
PRESSURE REGULATOR
EXPANSION TANK
THERMOSTAT
BACKFLOW PREVENTER
FILTER REGULATOR LUBRICATOR
FILTER REGULATOR
CENTRIFUGAL PUMP
SUBMERSIBLE PUMP
TURBINE PUMP
METERING PUMP
DIAPHRAGM PUMP
GEAR PUMP
AIR BLOWER
MOTOR

P&ID LINE TYPE

PIPING LINE
ELECTRICAL LINE
PNEUMATIC LINE
SOFTWARE DATA LINK

INTER CLEAN

709 James L Hart Parkway
Ypsilanti, MI 48197

Web Site: www.interclean.com
E-mail: sales@interclean.com
Phone: (734) 961-3300
(800) 468-3725
Fax: (734) 961-0092

NOTE:
- PRELIMINARY DRAWING, FOR REFERENCE ONLY.
- NOT INTENDED FOR MANUFACTURING OR INSTALLATION.
- SUBMITTED CONFIDENTIALLY FOR CUSTOMER REVIEW ONLY.

NOTE:
THIS DRAWING AND DESIGN IS THE PROPERTY OF INTERCLEAN EQUIPMENT AND MUST NOT BE COPIED OR USED EITHER DIRECTLY OR INDIRECTLY FOR ANY WORK OTHER THAN THAT OF INTERCLEAN EQUIPMENT WITHOUT SAID COMPANY'S EXPRESSED PERMISSION. ALL RIGHTS OF INVENTION OR DESIGN ARE RESERVED.

R:	DATE	DESCRIPTION	BY	APPR
B	7/9/10	FINISHED FULL SET	TB	
A	4/23/9	ADD PRESSURE WASHER, REPLACE SPINNER CHASSIS WASH	CR	SIL

InterClean Equipment

DESIGN: CR | DRAWN: CR | CHECK: | APPR: | SCALE: NO SCALE

CITY OF WINCHESTER, WINCHESTER, VA
TRUCK WASH, FRESH WATER SYSTEM
DRAWING INDEX

DATE: 3/13/19 | PART NO: #LY19-019-00 | WEIGHT:

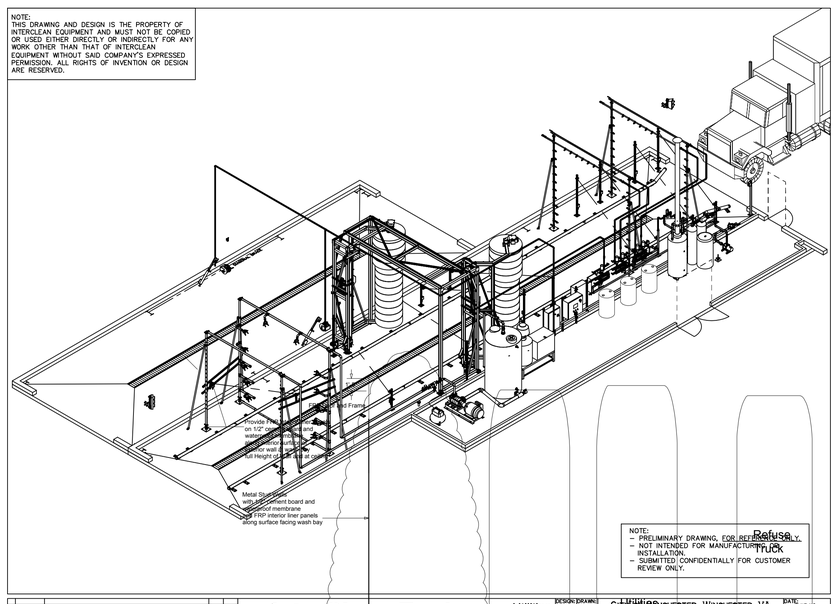

NOTE:
- PRELIMINARY DRAWING, FOR REFERENCE ONLY.
- NOT INTENDED FOR MANUFACTURING OR INSTALLATION.
- SUBMITTED CONFIDENTIALLY FOR CUSTOMER REVIEW ONLY.

B 7/9/10 FINISHED FULL SET TB
A 4/23/9 ADD PRESSURE WASHER, REPLACE SPINNER CHASSIS WASH CR SIL
R: DATE DESCRIPTION BY APPR
InterClean Equipment
CITY OF WINCHESTER, WINCHESTER, VA
TRUCK WASH, FRESH WATER SYSTEM
Utilities Shown as 3-D View
DESIGN: CR | DRAWN: CR | CHECK: | APPR: | SCALE: NO SCALE
DATE: 3/13/19 | PART NO: #LY19-019-01 | WEIGHT:

FOR INFORMATION ONLY

NORTH (Building)

CITY YARDS MAINTENANCE FACILITY: RENOVATION AND ADDITIONS
301 EAST CORK ST.
WINCHESTER, VIRGINIA 22601

ARCHITECT:

PAINTER-LEWIS, P.L.C.
817 CEDAR CREEK GRADE, SUITE 120
WINCHESTER, VIRGINIA 22601
Telephone: (540) 662-5792
Facsimile: (540) 662-5793
Email: office@painterlewis.com
CONSULTING ENGINEERS

COMMONWEALTH OF VIRGINIA
TIMOTHY G. PAINTER
Lic. No. 018260
PROFESSIONAL ENGINEER

M.E.P. ENGINEERS:
Comfort Designs Inc.
620 Pennsylvania Avenue
Winchester, VA 22604
540 665-2846

Seal
COMMONWEALTH OF VIRGINIA
ROGER L. CATLETT
Lic. No. 010537
8/5/2019
PROFESSIONAL ENGINEER

ISSUE/REVISIONS:

DRAWING TITLE: FOR INFORMATION ONLY BUILDING #9

SHEET TITLE: INFORMATION ONLY WASH BAY DETAILS

DATE: AUGUST 5, 2019
PROJECT NO.: 1801014
SCALE: AS NOTED
SHEET: M3.1

NOTE:
THE CONCRETE MUST CURE FOR 27 DAYS BEFORE INSTALLING TIRE GUIDES

NOTE:
- PRELIMINARY DRAWING, FOR REFERENCE ONLY.
- NOT INTENDED FOR MANUFACTURING OR INSTALLATION.
- SUBMITTED CONFIDENTIALLY FOR CUSTOMER REVIEW ONLY.

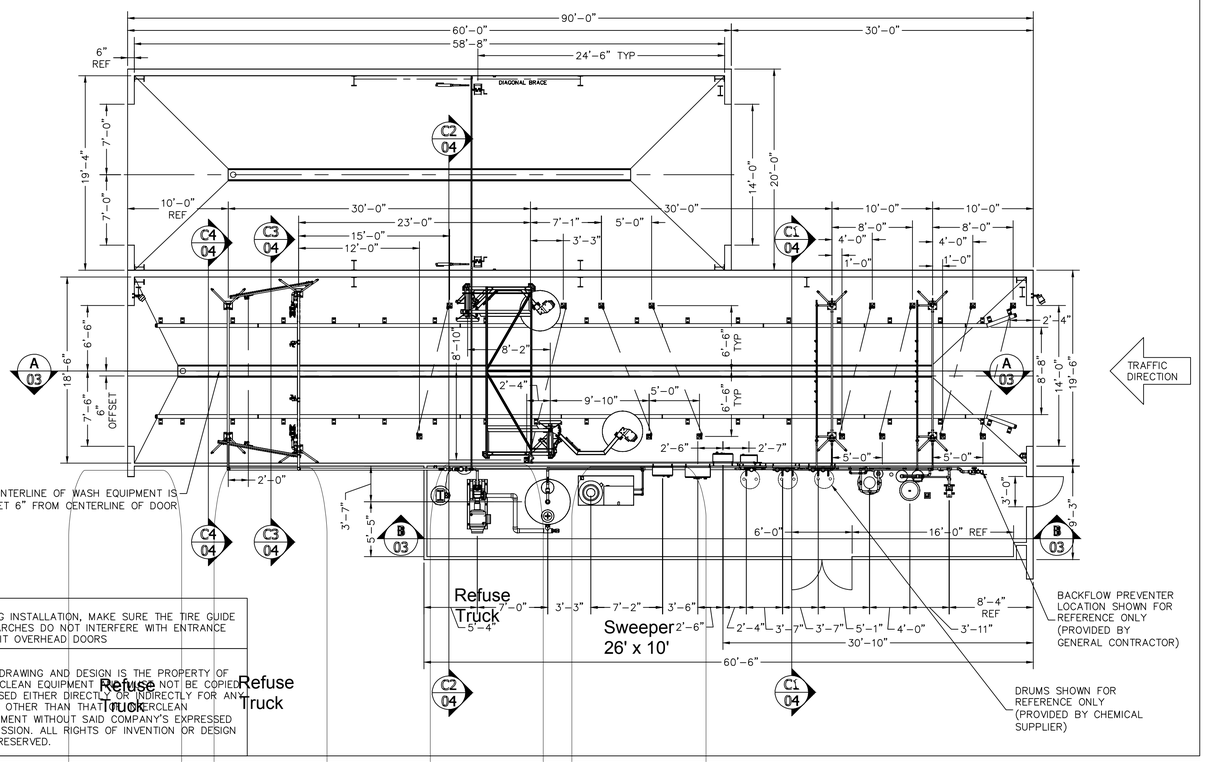

NOTE:
DURING INSTALLATION, MAKE SURE THE TIRE GUIDE AND ARCHES DO NOT INTERFERE WITH ENTRANCE OR EXIT OVERHEAD DOORS

NOTE:
THIS DRAWING AND DESIGN IS THE PROPERTY OF INTERCLEAN EQUIPMENT AND MUST NOT BE COPIED OR USED EITHER DIRECTLY OR INDIRECTLY FOR ANY WORK OTHER THAN THAT OF INTERCLEAN EQUIPMENT WITHOUT SAID COMPANY'S EXPRESSED PERMISSION. ALL RIGHTS OF INVENTION OR DESIGN ARE RESERVED.

R.	DATE	DESCRIPTION	BY	APPR
B	7/9/10	FINISHED FULL SET	TB	
A	4/23/19	ADD PRESSURE WASHER, REPLACE SPINNER CHASSIS WASH	CR	SIL

InterClean Equipment

DESIGN: CR	DRAWN: CR
CHECK: JK	APPR: SIL
SCALE: 3/16"=1'	

CITY OF WINCHESTER, WINCHESTER, VA
TRUCK WASH, FRESH WATER SYSTEM
PLAN VIEW

DATE: 3/13/19
PART NO: #LY19-019-02
WEIGHT:

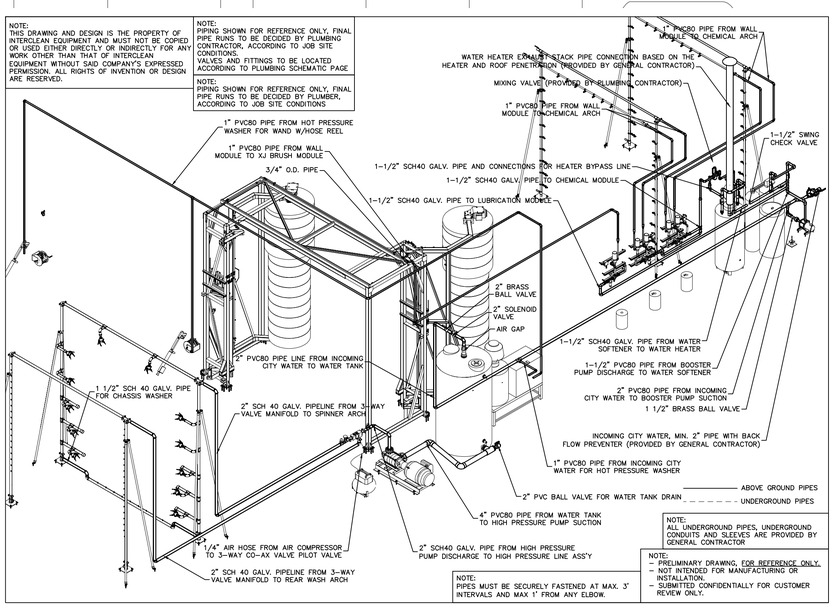

NOTE:
THIS DRAWING AND DESIGN IS THE PROPERTY OF INTERCLEAN EQUIPMENT AND MUST NOT BE COPIED OR USED EITHER DIRECTLY OR INDIRECTLY FOR ANY WORK OTHER THAN THAT OF INTERCLEAN EQUIPMENT WITHOUT SAID COMPANY'S EXPRESSED PERMISSION. ALL RIGHTS OF INVENTION OR DESIGN ARE RESERVED.

NOTE:
PIPING SHOWN FOR REFERENCE ONLY, FINAL PIPE RUNS TO BE DECIDED BY PLUMBING CONTRACTOR, ACCORDING TO JOB SITE CONDITIONS.
VALVES AND FITTINGS TO BE LOCATED ACCORDING TO PLUMBING SCHEMATIC PAGE

NOTE:
PIPING SHOWN FOR REFERENCE ONLY, FINAL PIPE RUNS TO BE DECIDED BY PLUMBER, ACCORDING TO JOB SITE CONDITIONS

NOTE:
ALL UNDERGROUND PIPES, UNDERGROUND CONDUITS AND SLEEVES ARE PROVIDED BY GENERAL CONTRACTOR

NOTE:
- PRELIMINARY DRAWING, FOR REFERENCE ONLY.
- NOT INTENDED FOR MANUFACTURING OR INSTALLATION.
- SUBMITTED CONFIDENTIALLY FOR CUSTOMER REVIEW ONLY.

NOTE:
PIPES MUST BE SECURELY FASTENED AT MAX. 3' INTERVALS AND MAX 1' FROM ANY ELBOW.

R.	DATE	DESCRIPTION	BY	APPR
B	7/9/10	FINISHED FULL SET	TB	
A	4/23/19	ADD PRESSURE WASHER, REPLACE SPINNER CHASSIS WASH	CR	SIL

InterClean Equipment

DESIGN: CR	DRAWN: CR
CHECK: JK	APPR: SIL
SCALE: NO SCALE	

CITY OF WINCHESTER, WINCHESTER, VA
TRUCK WASH, FRESH WATER SYSTEM
PIPING 3D

DATE: 3/13/19
PART NO: #LY19-019-08
WEIGHT:

FOR INFORMATION ONLY

NORTH (Building)

CITY YARDS MAINTENANCE FACILITY: RENOVATION AND ADDITIONS
301 EAST CORK ST.
WINCHESTER, VIRGINIA
22601

ARCHITECT:

Seal

PAINTER-LEWIS, P.L.C.
817 CEDAR CREEK GRADE, SUITE 120
WINCHESTER, VIRGINIA 22601
Telephone: (540) 662-5792
Facsimile: (540) 662-5793
Email: office@painterlewis.com
CONSULTING ENGINEERS

COMMONWEALTH OF VIRGINIA
TIMOTHY G. PAINTER
Lic. No. 018260
PROFESSIONAL ENGINEER

M.E.P. ENGINEERS:

Comfort Designs Inc.
620 Pennsylvania Avenue
Winchester, VA 22604
540 665-2846

Seal

COMMONWEALTH OF VIRGINIA
ROGER L. CATLETT
Lic. No. 010537
8/5/2019
PROFESSIONAL ENGINEER

ISSUE/REVISIONS:

DRAWING TITLE:
FOR INFORMATION ONLY BUILDING #9

SHEET TITLE:
INFORMATION ONLY WASH BAY PLAN

DATE: AUGUST 5, 2019
PROJECT NO.: 1801014
SCALE: AS NOTED
SHEET: M3.2

ITEM	QTY	NAME	DESCRIPTION
1	1	#DY13-571_1	Air Compressor Ass'y, 6 Gal., 2.6CFM@90 psi, 120v
2	1	#D99038_1	Spinner Arch Ass'y, 12 Spinners, H=15'-7", W=15'-6", Galv.
3	1	#DY03-023_1	Arch Ass'y, Rear Wash, w/34x0530 Nozzles, W=13', H=14'-8"
4	2	#DY00-210_1	Arch Ass'y, Chem., S.S., for Truck Wash, Side & Rear
5	8	#D97437_1	Arch Leg Ass'y, Floor Mount, H=12' 8 1/2", Galv.
6	1	#DY13-301_1	XJ-Brush Module, 2 Rear, H=11ft-6in, 2x2Hp,460V, 60Hz, Galv.
7	1	#D99016_1	Spinner Nozzle Adjusting Tool Assembly
8	1	#DY15-089_1	Detergent, Low-PH, 5 Gallon Container
9	1	#DY15-090_1	Detergent, High-PH, 5 Gallon Container
10	1	CH621-5	Lubricant, 5 Gallon, Interpower Brush Lube
11	1	C0161E-00	Fixed Air Gap, Inlet 2", Outlet Threaded 3", Cast Iron
12	1	CO2211-15	Valve, Ball, 1 1/2", NPT, Brass
13	1	CO2211-2	Valve, Ball, 2", NPT, Brass
14	1	CO2221-32	Valve, Solenoid, 2", NPT x NPT, Brass, 24VDC
15	1	CO2231-15	Valve, Swing Check, 1 1/2" F.NPT, Brass
16	4	CO244-00	Valve, Freeze Prot. SS 1/2", HAT/FP(300 psi), #114-312100-035
17	1	#DY16-459_1	Remote Control Assy, (2x) 2 Pos. Sel. Switch, Floor Mnt, 24VDC
18	1	#DY11-514_1	Air Filter Ass'y, 1/2", Max. 140 CFM, w/Mnt Bracket
19	1	#DY18-800_1	Master Control Panel, Standard, MCP120, Nema 4, 120v
20	1	#DY18-711_1	Slave Brush Panel, Field Ass'y Nema 4X, 460V
21	1	#DY18-816_1	Motor Starter Panel, Field Ass'y, Nema 4, 460v
22	1	#DY18-854_1	Pneumatic Panel Ass'y, for 6 Valves, XJ-Brush Frame Mnt
23	1	#DY10-637_1	Hot Water Pressure Washer, Landa, VHG6-30034C, 460V, 19 Amp
24	2	HA32131-01	Hose Reel, Manual, 100'x3/8", 4000psi, Landa #9.802-265.0
25	2	Ha33a-01	Wall Mount Bracket, for Remote Control, Landa #8.930-131.0

Parts List

DRAWINGFILENAME	ITEM	QTY	NAME	DESCRIPTION	DRAWINGFILENAME
AC11511-00	26	2	HA34a-01	Hose, High Pressure, 75'x3/8", 6000psi, Landa #8.739-073.0	HA34a-01
AR31Hc-00	27	2	HA35a-01	Wash Gun, 5000Psi, 10.5gpm, 3/8"x1/4", Landa #8.749-170.0	HA35a-01
AR35Hc-01	28	2	HA35a-02	Wand, Double, 4000 psi, 1/4"x41", Landa #8.711-308.0	HA35a-02
AR35Hc-02	29	2	Ha37a-01	Wand Holder, Wall Mnt, Landa #8.708-881.00	Ha37a-01
AR3611-00	30	2	Ha38a-01	Remote Control Station, Wireless, Landa #8.930-358.0	Ha38a-01
BMg11212-02	31	1	HE331-6.4	Expansion Tank, 4.4 Gal., In-Line Model Amtrol #ST-12	HE331-6.4
C61813-00	32	1	HE481111-00	Water Heater, Nat. Gas, 120V, 199 kBtu, 100 Gal, #D100S-199-3N	HE481111-00
CH6112-5	33	1	#DY15-092_1	High Pressure Pump Ass'y, Floor Mnt, 75 Hp, 230/460V, 60Hz	PU2112224-00
CH6122-5	34	1	#DY04-169_1	Hi-Pressure Line Ass'y, 2 Gauges, 3-Way Co-ax & Gate Valves	PU21213-03
CH621-5	35	1	#DY11-160_1	Pump, Booster, Floor Mnt, 1Hp, 460V, 60Hz, tefc, Gould.	PU22112321-00
C0161e-00	36	1	#DY14-056_1	Dosatron Pump, Field Ass'y, Wall Mnt, One Pump (Aflas 1:50~500)	PU23441-01
CO2211-15	37	1	#DY12-164_1	Dosatron Pump (Aflas 1:20) Ass'y, 2 Pumps, Wall Mnt	PU23442-00
CO2211-2	38	1	#DY12-166_1	Dosatron Pump (Viton 1:50) Ass'y, 2 Pumps, Wall Mnt	PU23442-01
CO2221-32	39	8	#DY08-433_1	Photo Eye Ass'y, Receiver, H=3', SS 304, Floor Mnt	SE3211211-00
CO2231-15	40	8	#DY08-342_1	Photo Eye Ass'y, Sender, H=6', SS 304, Floor Mnt	SE3212212-00
CO244-00	41	1	#DY00-101_1	Photo Eye Ass'y, Receiver, Cutler-Hammer, Arch Leg Mount	SE323311-00
COc4713-19	42	1	#DY00-102_1	Photo Eye Ass'y, Sender, Cutler-Hammer, Arch Leg Mount	SE323321-00
COk3321-00	43	1	#DY15-120_1	Softener Ass'y, w/Salt & Test Kit, 1", 16GPM	SO621-00
EP1111113-00	44	1	#D97258_1	Tank, 925 Gal., Field Ass'y, w/2 Float Level Switches	TA2112-00
EP2211213-00	45	1	#DY16-046_1	Traffic Light, Wall Mnt, SS304, 2 Lights (Red/Green), 120-277V	TC33121122-00
EP2411113-00	46	1	#DY17-514_1	Traffic Light, Wall Mnt, SS304, 3 Light (R/A/G), 120-277V	TC33121132-00
EP3212-06	47	1	#DY18-501_1	Light/Alarm, Field Assembly, PhotoEye Mounted, For Overspeed	TC3353-00
Ho1273-02	48	1	#DY07-142_1	Tire Guides, CTW, Galv., L=85', OD=4.5", H= 5.5"	TGa141-85
HA32131-01	49	1	#DY10-103_1	Under Chassis Spray Bar Ass'y, 2" Pipe, w/9x2560 HU Nozzles	UC11132-00
Ha33a-01					

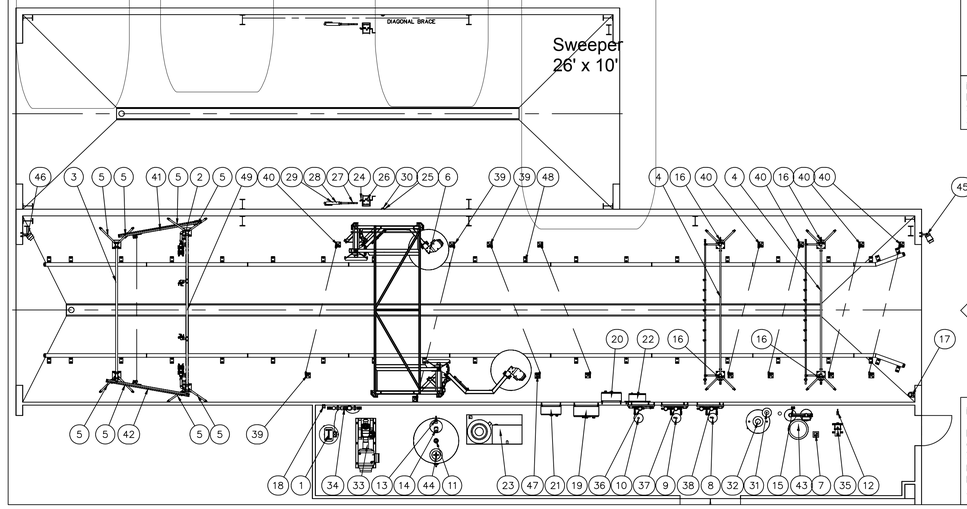

NOTE:
- PRELIMINARY DRAWING, FOR REFERENCE ONLY.
- NOT INTENDED FOR MANUFACTURING OR INSTALLATION.
- SUBMITTED CONFIDENTIALLY FOR CUSTOMER REVIEW ONLY.

NOTE:
ITEMS SPECIFIED AND DETAILS INDICATED MAY BE SUBJECT TO SUPERSEDING PER LOCAL CODES AND REGULATIONS

NOTE:
THIS DRAWING AND DESIGN IS THE PROPERTY OF INTERCLEAN EQUIPMENT AND MUST NOT BE COPIED OR USED EITHER DIRECTLY OR INDIRECTLY FOR ANY WORK OTHER THAN THAT OF INTERCLEAN EQUIPMENT WITHOUT SAID COMPANY'S EXPRESSED PERMISSION. ALL RIGHTS OF INVENTION OR DESIGN ARE RESERVED.

R.	DATE	DESCRIPTION	BY	APPR
B	7/9/10	FINISHED FULL SET	TB	
A	6/23/19	ADD PRESSURE WASHER, REPLACE SPINNER CHASSIS WASH	CR	SIL

InterClean Equipment

DESIGN: CR | DRAWN: CR | CHECK: | APPR: | SCALE: 3/16"=1'

CITY OF WINCHESTER, WINCHESTER, VA
TRUCK WASH, FRESH WATER SYSTEM
EQUIPMENT LAYOUT

DATE: 3/13/19 | PART NO: #LY19-019-07 | WEIGHT:

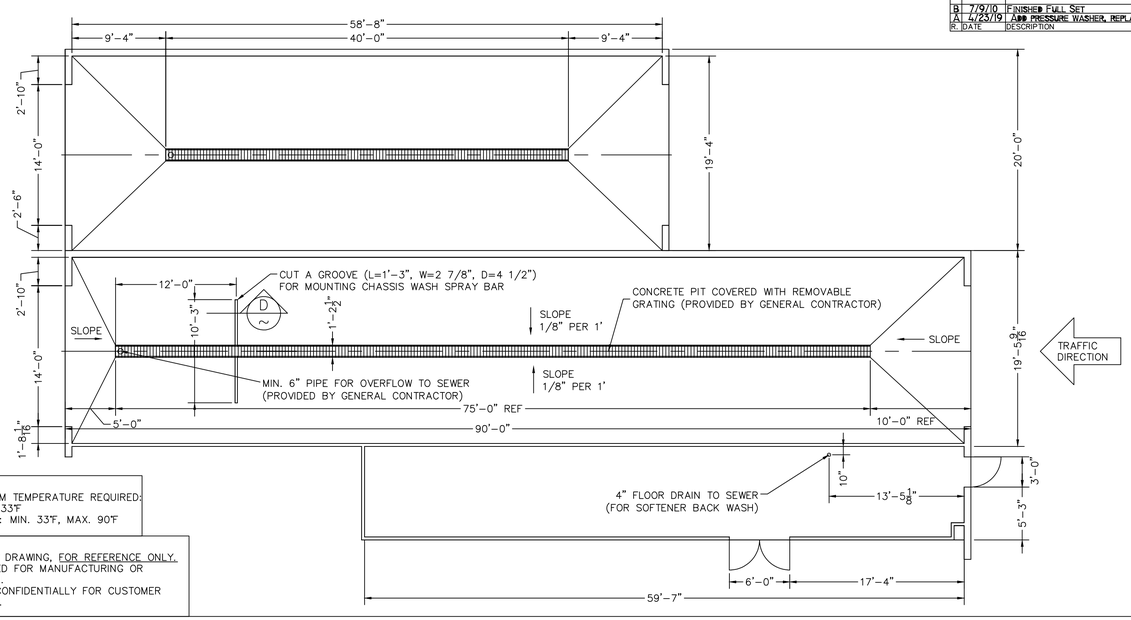

NOTE:
THE WASH SYSTEM TEMPERATURE REQUIRED:
WASH BAY: MIN. 33°F
EQUIPMENT ROOM: MIN. 33°F, MAX. 90°F

NOTE:
- PRELIMINARY DRAWING, FOR REFERENCE ONLY.
- NOT INTENDED FOR MANUFACTURING OR INSTALLATION.
- SUBMITTED CONFIDENTIALLY FOR CUSTOMER REVIEW ONLY.

R.	DATE	DESCRIPTION	BY	APPR
B	7/9/10	FINISHED FULL SET	TB	
A	6/23/19	ADD PRESSURE WASHER, REPLACE SPINNER CHASSIS WASH	CR	SIL

InterClean Equipment

DESIGN: CR | DRAWN: CR | CHECK: | APPR: | SCALE: 3/16"=1'

CITY OF WINCHESTER, WINCHESTER, VA
TRUCK WASH, FRESH WATER SYSTEM
CONCRETE LAYOUT

DATE: 3/13/19 | PART NO: #LY19-019-09 | WEIGHT:

FOR INFORMATION ONLY

NORTH (Building)

CITY YARDS MAINTENANCE FACILITY:
RENOVATION AND ADDITIONS
301 EAST CORK ST.
WINCHESTER, VIRGINIA
22601

ARCHITECT:

Seal

PAINTER-LEWIS, P.L.C.
817 CEDAR CREEK GRADE, SUITE 120
WINCHESTER, VIRGINIA 22601
Telephone: (540) 662-5792
Facsimile: (540) 662-5793
Email: office@painterlewis.com
CONSULTING ENGINEERS

TIMOTHY G. PAINTER
Lic. No. 018260

M.E.P. ENGINEERS:
Comfort Designs Inc.
620 Pennsylvania Avenue
Winchester, VA 22604
540 665-2846

ROGER L. CAILETT
Lic. No. 010537
8/5/2019

ISSUE/REVISIONS:

DRAWING TITLE: FOR INFORMATION ONLY BUILDING #9

SHEET TITLE: INFORMATION ONLY WASH BAY DETAILS

DATE: AUGUST 5, 2019
PROJECT NO.: 1801014
SCALE: AS NOTED
SHEET: M3.3

PLUMBING LEGEND

W	NEW SANITARY SEWER (W) UNDERGROUND.
V	VENT (V)
CW	COLD WATER (CW) INSULATED 1" THICK W/ VAPOR BARRIER
HW	HOT WATER (HW) INSULATED 1" THICK W/ VAPOR BARRIER
HWR	HOT WATER RETURN (HWR) INSULATED 1" THICK W/ VAPOR BARRIER
P–#	FIXTURE NUMBER – SEE PLUMBING SCHEDULE
C.O.	CLEAN OUT
F.C.O.	FLOOR CLEAN–OUT W/ BRASS COVER
W.C.O.	WALL CLEAN–OUT W/ CHROME COVER
V.T.R.	VENT THRU ROOF
U/G	UNDERGROUND LINE
F.D.	FLOOR DRAIN W/ TRAP PRIMER VALVE & CONNECTION AS SPECIFIED
W.H.A.	WATER HAMMER ARRESTOR PDI TYPE
F.P.H.B.	FROST PROOF HOSE BIBB W/ INTEGRAL VACUUM BREAKER
	PIPE UP – INSULATED 1" THICK W/ VAPOR BARRIER
	PIPE DOWN – INSULATED 1" THICK W/ VAPOR BARRIER
S–#	SANITARY WASTE RISER REFERENCE NUMBER

HANDICAP ACCESSIBILITY NOTES:

WATER CLOSETS: 17"–19" A.F.F. TO RIM
18" FROM SIDEWALL TO CENTER (IN PLAN)
24" FROM SIDEWALL TO CENTER FOR FOLD DOWN BARS (IN PLAN)

LAVATORIES: 34" MAX. AF.F. TO TOP OF RIM
29" MIN. CLEAR A.F.F. @ APRON
17" MIN. PROJECTION
30" CLEAR CENTERED (IN PLAN)

WATER COOLERS: 36" MAX. A.F.F.
27" MIN. CLEAR A.F.F. @ APRON
17"–19" PROJECTION

URINALS: 17" MAX. A.F.F. TO TOP OF ELONGATED RIM.

Plumbing Fixture Schedule

Type Mark	Description	Manufacturer or equal	Model
P-1	FROST-PROOF HOSE BIBB	Josam	JOSAM HYDRASAN I series 71050 or approved equal w/ key control fitting and integral vacuum breaker.
P-2	YARD HYDRANT HEAVY DUTY	Josam	JOSAM TYPE 71450-4-91 or approved equal with 1" outlet and 3/4" hose adapter.
P-3	SERVICE/HAND SINK	FIAT Products	Basis of Design: Laundry Tub Floor Model TAT1, heavy duty, with Swing Faucet with vacuum breaker, hose fitting, hot/cold water w/ chrome shutoff valves, trap and vent.
P-4	FLOOR DRAIN W/TRAP SEAL	Josam	JOSAM 30004-A-50 - 4" floor drain w/ adjustable strainer and JOSAM TSI Trap Seal or equal Model 88244 inline floor drain trap sealer.
P-5	COMBINATION DRENCH SHOWER/EYEWASH	Bradley	BRADLEY Combination Drench Shower/Eyewash Model S19-310LL w/ foot pedal, thermostatic tempering valve per manufacturer and code.
P-6	40 GALLON NATURAL GAS WATER HEATER	A.O. Smith	A.O. SMITH Model GPVL-40, 40 gallon, 45 gph @ 90 F rise, 40,000 btuh input, 115 volt combustion air motor and electronic ignition W/ T&P relief/pipe, PVC combustion air piping and wall cap. See detail on this drawing.
P-7	HOT WATER EXPANSION TANK	Amtrol	AMTROL ST-12-V NSF rated expansion tank w/ pressure gage, install on cold water incoming line, drain cock, shutoff valves & all piping & fittings.
P-8	A.D.A HANDICAP WATER CLOSET	American Standard	American Standard "Madera" 17" H Elongated flush Valve Toilet 3043.102, Barrier Free with Sloan "Ecos" No. 8111 Flush Valve and Church No. 9500SSCT Seat & chrome stops.
P-9	WALL HUNG LAVATORY SINK	American Standard	American Standard 0355.012 Wall Hung Bathroom Sink with overflow, wall carrier, concealed arms support, single lever faucet 7075.056 and grid drain, ADA compliant & TrueBro Guard.
P-10	FLOOR SINK	Josam	JOSAM 49300-NB-LG - 4" floor drain less grate, 8" square top, 6" deep, bottom outlet and sloped rim or equal.
P-11	INTERIOR HOSE BIBB	Watts	Watts Model SC8-4 or approved equal with tamper-proof vacuum breaker.
P-12	OIL/WATER SEPARATOR W/ STORAGE TANK	J.R. Smith	Model 8599-250-500, 250 gpm, 500 gallon storage tank with sediment basket, 4" clean out, traffic rated cover, high level alarm/light control system, waste/vent lines per mfr & code.
P-13	HEAVY DUTY YARD DRAIN W/SEDIMENT BUCKET	J.R. Smith	Model 2470 or 2475 Traffic Floor Drain, 4" outlet, hinged grate, aluminum bucket, ductile iron grate. Coordinate with G.C. on installation and sloped floor & connections.
P-14	HEAVY DUTY YARD DRAIN W/SEDIMENT BUCKET	J.R. Smith	Model 2470 or 2475 Traffic Floor Drain, 6" outlet, hinged grate, aluminum bucket, ductile iron grate. Coordinate with G.C. on installation and sloped floor & connections.
P-15	EMERGENCY EYEWASH W/ HAND & FOOT PEDAL	Bradley	BRADLEY Eyewash Model S19214YF Pedestal-mount w/ foot pedal, thermostatic tempering valve S19-2000 EFX8 per manufacturer and code.
P-16	NON-FREEZE YARD HYDRANT W/ UNDERGROUND VALVE BOX	Woodford & Mueller Co.	Woodford Yard Hydrant Model Y34, 4 foot bury depth, in-ground Mueller 300 3/4" ball valve shutoff & curb box H-10316 with H-10391 foot piece and install per manufacturer and code.

PLUMBING NOTES:

1. ALL FIXTURES SHALL BE WHITE UNLESS NOTED OTHERWISE. PIPING MATERIAL SHALL COMPLY WITH THE 2015 VIRGINIA PLUMBING CODE.
2. ALL WORK SHALL COMPLY WITH THE 2015 INTERNATIONAL MECHANICAL AND PLUMBING CODES, NATIONAL ELECTRICAL CODE, AND LOCAL GOVERNING CODES AND PERMITS. CONTRACTOR SHALL OBTAIN AND PAY FOR ALL PERMITS. PROVIDE & INSTALL NEW WATER LINES TO EACH BUILDILNG WITH BACKFLOW AND PRV PER LOCAL CODE.
3. ALL INTERIOR HOT, COLD & RETURN WATER LINES SHALL BE INSULATED. HOT WATER LINES AND EXPOSED DRAINS SHALL BE INSULATED W/ WHITE PLASTIC JACKET INSULATION TO PREVENT TOUCH BY HANDICAP (TRUEBRO LAV GUARD OR EQUAL). PIPE INSULATION 1 1/2"THICK IN ABOVE CEILINGS AND 1" THICK IN WALLS.
4. CONTRACTOR SHALL PROVIDE ALL NECESSARY FITTINGS, FIXTURES, & VALVES TO MAKE A COMPLETE AND OPERATING SYSTEM. ALL PIPING SHALL BE RUN INSIDE ABOVE CEILING, OR EXPOSED AT MAXIMUM HEIGHT UNLESS SHOWN OTHERWISE. ALL PIPE PENETRATIONS OF FIRE RATED CEILINGS AND WALLS SHALL HAVE FIRE SEALANT/CAULKING PER MANUFACTURER AND CODE.
5. CONTRACTOR SHALL COORDINATE CONNECTION OF WATER AND SEWER SYSTEMS WITH LOCAL UTILITY COMPANIES, SITE CONTRACTOR, OWNER, AND ARCHITECT. CONTRACTOR SHALL COORDINATE SHUTDOWN OF UTILITY SYSTEMS WITH LOCAL UTILITY CO. & OWNER PRIOR TO MAKING FINAL CONNECTIONS TO WATER AND SANITARY SEWER MAINS.
6. CONTRACTOR SHALL PROVIDE ALL MOUNTING HARDWARE AND ACCESSORIES TO INSTALL ALL FIXTURES. INSTALL HANDICAP FIXTURES IN COMPLIANCE WITH ADA.
7. PLUMBER/INSTALLER SHALL INSURE THAT PIPES ARE ADEQUATELY INSULATED TO PREVENT FREEZING. PLUMBER SHALL USE FIBERGLASS INSULATION WITH VAPOR BARRIER (OWENS CORNING OR EQUAL).
8. PLUMBING CONTRACTOR SHALL FIELD COORDINATE FINAL LOCATION OF WATER, STORM, SANITARY SEWER AND VENT PIPING W/ G.C., STRUCTURAL, MECHANICAL,

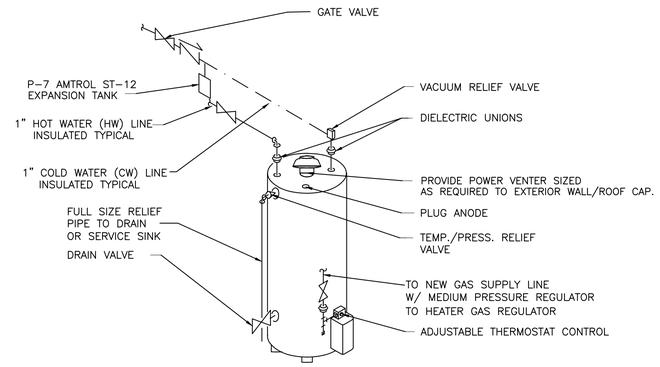

P–6 WATER HEATER DETAIL

N.T.S.

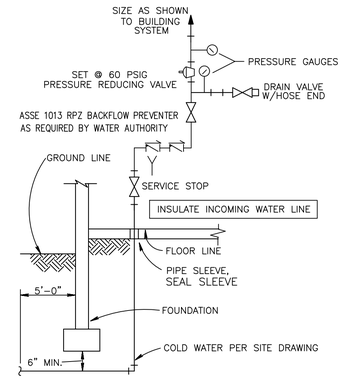

TYPICAL WATER SERVICE ENTRANCE DETAIL

N.T.S.

P-5 S19-310LL
Combination Drench Shower/Eyewash Unit

- Complies with American National Standard Z358.1
- Galvanized Steel Protected with BradTec® Safety Yellow Coating
- Combination Units may be Top-Supplied or Mid-Supplied
- Universal Identification Sign and Inspection Tag Included
- Full, One-Year Warranty
- SpinTec™ showerheads are covered by one or more of the following patents: 8113446; D594,089; D669,555; Reg. Comm. Des. 0001079560-0001. Other patents pending.
- Classified by Underwriters Laboratory Inc. to ANSI Z358.1

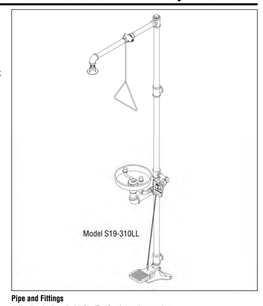

Specifications

Combination Drench Shower/Eyewash Unit saves space and fits easily into any work environment. Shower valve operates quickly by a pull rod with a triangular handle. Shower provides a superior washdown with a more even spray pattern. Eyewash operated by a large, highly visible push handle. Safe, steady water flow under varying water supply conditions from 30–90 PSI is assured by integral flow control in the sprayhead assembly. NOTE: The ANSI Z358.1 standard requires an uninterruptible supply of flushing fluid at a minimum 30 PSI flowing pressure.

This plumbing fixture is not intended to dispense water for human consumption through drinking or for preparation of food or beverages.

Local codes may require the installation of a backflow prevention valve to complete proper installation. Compliance with local codes is the responsibility of the installer. Valve must be tested annually to verify that it is functioning properly. Backflow prevention valves are not included with the fixture and may be supplied by the contractor or purchased from Bradley Corporation.

Standard Equipment

SpinTec™ Showerhead
3.1" (78.7mm) diameter highly visible yellow impact-resistant plastic. SpinTec drench showerhead features integral 22 GPM flow control, conserving water and helping to accurately size your tepid water system.

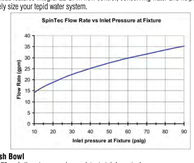

Eyewash Bowl
10¾" (273mm) diameter corrosion-resistant stainless steel.

Standard Sprayhead Assembly
Chrome-plated brass sprayhead with twin soft-flow eyewash heads and protective sprayhead covers. Safe, steady water flow under varying water supply conditions from 30–90 PSI is assured by integral flow control in the sprayhead assembly.

Shower Valve
Chrome-plated brass 1" NPT stay-open ball valve. Operated by a stainless steel pull rod with triangular handle.

Eyewash Valve
Chrome-plated brass ½" NPT stay-open ball valve. Hand operated by highly visible stainless steel push handle or foot valve.

Pipe and Fittings
1¼" galvanized steel with BradTec® safety yellow coating.

Water Supply
1¼" NPT.

Model	Description
☒ S19-310LL	Drench Shower/Eyewash - **Plastic Showerhead and Stainless Steel Bowl**
☒ S19-2200	Navigator EFX60 - Emergency Thermostatic Mixing Valve

Recommended Option:
Navigator S19-2200 EFX60
Emergency Thermostatic Mixing Valve
NAVIGATOR
Satisfies ANSI Z358.1 tepid water requirements.

© 2015 Bradley
P.O. Box 309, Menomonee Falls, WI 53052-0309
800 BRADLEY (800 272 3539) +1 262 251 6000
bradleycorp.com

P-5 S19-310LL
Combination Drench Shower/Eyewash Unit

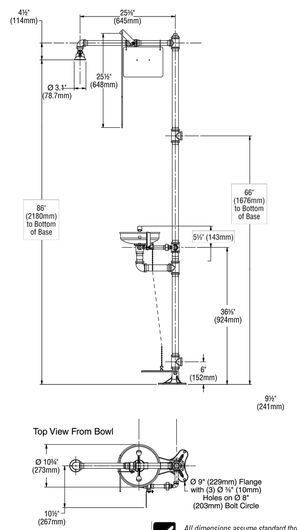

All dimensions assume standard thread engagement. Variations in manufacturing allow for +/- ¼" (3mm) per threaded joint. To find the tolerance of a dimension, add the number of thread joints in between a dimension and multiply it by ¼" (3mm).

© 2015 Bradley
P.O. Box 309, Menomonee Falls, WI 53052-0309
800 BRADLEY (800 272 3539) +1 262 251 6000
bradleycorp.com

P-15 S19214Y, S19214YF
Pedestal-Mount Halo™ Eye/Face Wash with Stainless Steel Bowl

- Halo™ Delivers the Most Effective Eye/Face Washdown Coverage and Spray Pattern
- Exceeds ANSI/ISEA Z358.1 Specifications
- Industry's Only Self-Draining Design – The Aquaduct™
- Separate Supply and Waste Pipes – Meets CEN and Plumbing Requirements
- Ergonomic Hand Activation Eye/Face Wash Paddle – Easy to Reach from Any Direction
- Barrier Free
- Fully-Assembled and Factory-Tested Eye/Face Wash with Hinged Dust Covers
- Universal Identification Sign and Inspection Tag Included
- Classified by Underwriters Laboratories Inc. to ANSI/ISEA Z358.1.
- Halo™ is Covered by One or More of the Following Patents: 9,700,484; 9,314,398; D662205; D673298; D662605; D665920; D662219; and D671226. Other Patents Pending.

Specifications

Standard Eye/Face Wash Units save space and fit easily into any work environment. Halo eye/face wash, operated by an ergonomic, highly visible push handle, provides effective wash down coverage and spray pattern. Integral strainer reduces debris in the water and also prevents clogging.

This plumbing fixture is not intended to dispense water for human consumption through drinking or for preparation of food or beverages.

Pipe and Fittings
Piping to 1/2" NPT water supply inlet on unit. Piping to 1-1/4" NPT drain outlet for eyewash. 1-1/4" piping assembly manufactured of one of the following materials:
- Galvanized steel with BradTec® safety yellow coating

Ball Valve
½" stay-open eye and eye/face wash valve manufactured of the following materials:
- Chrome-plated brass

Eye/Face Wash
The Halo eye/face wash system offers a high performance rinsing platform that provides rapid relief to an individual's eyes and face that have been injured by chemicals or particulate. This system provides the most complete face wash available in the market. The eye/face wash includes an integral 5.1 GPM (19.2 L) flow control, providing water at a safe velocity while maintaining its effectiveness (exceeds minimum water flow of 3.0 GPM (11.4 L) at 30 PSI (2.0 bar)). Eye/face wash is protected by flip open dust covers that open when product is activated. Safe, steady water flow under varying water supply conditions from 30–90 PSI (2.0-6.1 bar) is assured by integral flow control in the sprayhead assembly. Sprayheads are made from an impact resistant ABS plastic.

Bowl
Bowl is constructed of Type 304 corrosion-resistant stainless steel.

Activation
Type 304 Stainless steel push handle (S19214Y) with Type 304 stainless steel foot pedal (S19214YF).

Model	Description
☐ S19214Y	Halo eye/face wash, stainless steel bowl
☒ S19214YF	Halo eye/face wash, stainless steel bowl, foot pedal

Tepid Water Options
Navigator S19-2000 EFX8 Emergency Thermostatic Mixing Valve
Keltech CLE-Series Tankless Water Heater
NAVIGATOR
Satisfies ANSI/ISEA Z358.1 tepid water requirements.

© 2018 Bradley
P.O. Box 309, Menomonee Falls, WI 53052-0309
800 BRADLEY (800 272 3539) +1 262 251 6000
bradleycorp.com

P-15

Drawing depicts Eyewash. Eye/Face Wash dimensions are the same.

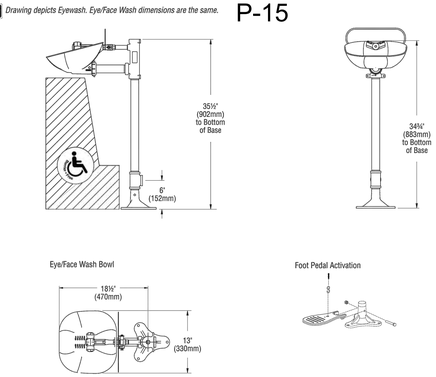

All dimensions assume standard thread engagement. Variations in manufacturing allow for +/- ¼" (3mm) per threaded joint. To find the tolerance of a dimension, add the number of thread joints across the length of the dimension and multiply it by ¼" (3mm).

NORTH (Building)

CITY YARDS MAINTENANCE FACILITY: RENOVATION AND ADDITIONS
301 EAST CORK ST.
WINCHESTER, VIRGINIA
22601

ARCHITECT:
GDA

PAINTER-LEWIS, P.L.C.
817 CEDAR CREEK GRADE, SUITE 120
WINCHESTER, VIRGINIA 22601
Telephone: (540) 662–5792
Facsimile: (540) 662–5793
Email: office@painterlewis.com
CONSULTING ENGINEERS

COMMONWEALTH OF VIRGINIA
TIMOTHY G. PAINTER
Lic. No. 018260
PROFESSIONAL ENGINEER

M.E.P. ENGINEERS:
CDi
Comfort Designs Inc.
620 Pennsylvania Avenue
Winchester, VA 22604
540 665–2846

Seal
COMMONWEALTH OF VIRGINIA
ROGER L. CATLETT
Lic. No. 010537
8/5/2019
PROFESSIONAL ENGINEER

ISSUE/REVISIONS:

DRAWING TITLE:
PHASE I & II PLUMBING SCOPE

SHEET TITLE:
SCHEDULES & DETAILS

DATE: AUGUST 5, 2019
PROJECT NO.: 1801014
SCALE: AS NOTED
SHEET: P1.1

TRAP SEAL INSERT | Waterless Trap Seal for Floor Drains

P-4

The Problem
- Sewer odors coming up from dried traps
- Floor drain creating odor issues
- Expensive procedures to replace trap primers
- Drain flies, maggots and roaches escaping through floor drains
- Drain fly breeding issues in floor drains
- Current solutions are chemical-based, ineffective, and hazardous to the environment
- Added maintenance procedures to prevent these issues

The Solution
- The one way valve creates a seal to eliminate floor drain odor issues
- No more gases from floor drains
- Prevents and blocks bugs from crawling up through the floor drains
- Stops drain flies from entering the facility
- Sanitary, eco-friendly, and chemical free solution
- Simple installation & improved drainage quality

PRODUCT FEATURES
- Easy to install and easy to remove – no pliers needed.
- Requires no caulk or expensive installation tool.
- Saves a significant amount of time, water, costs, and energy.
- *The 3.5" fits in the strainer of most commercial cast iron drains for an easy retrofit into existing drains.

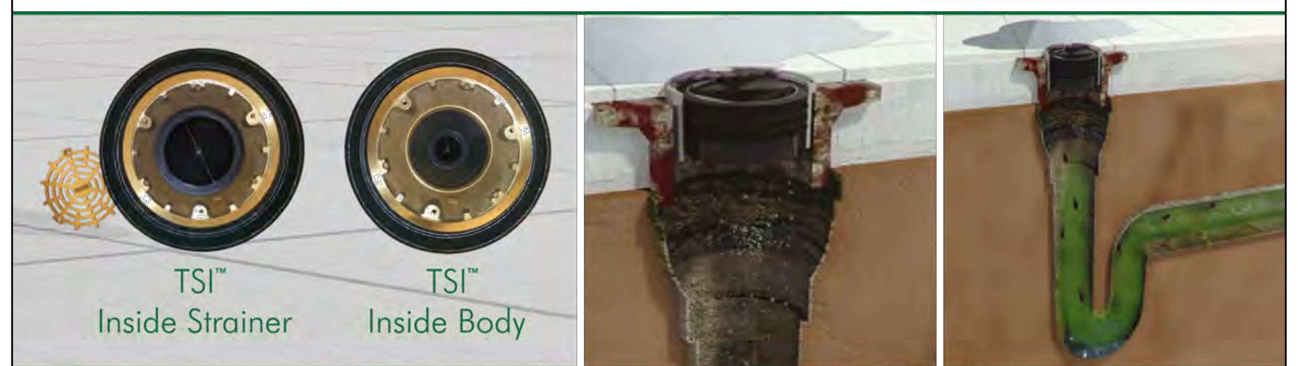

Part Number	Description Pipe Size (A)	Height (B)	Flow Rate (GPM)
88242	2" Drain Trap Seal	2"	12.0
88243	3" Drain Trap Seal	2"	34.0
88243-1/2*	3.5" Drain Trap Seal	2"	51.0
88244	4" Drain Trap Seal	2"	73.0

Note: Size of TSI™ will match the drain outlet size. | *3.5" TSI™ fits in the strainer of the drain.

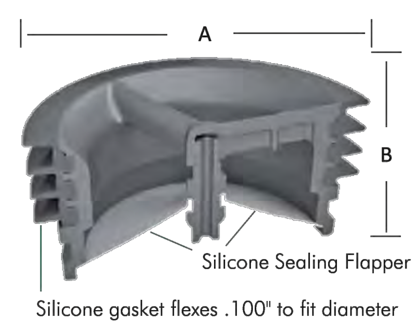

Simply insert the proper size Trap Seal Insert into the existing floor drain or strainer to keep sewer gases, odors, and bugs out.

Visit www.josam.com for more information.

800.36.JOSAM | www.josam.com JOSAM

TSISS 0319

SMITH® JAY R. SMITH MFG. CO.® MEMBER OF MORRIS GROUP INTERNATIONAL, POST OFFICE BOX 3237, MONTGOMERY, ALABAMA 36109-0237 (USA), TEL: 334-277-8520 FAX: 334-272-7396 www.jrsmith.com — CUSTOMER DRIVEN SINCE 1926 — MEMBER OF:

LOCATION: City Yards Maintenance, Building #7 Car Wash, Winchester, VA

P-12 OIL INTERCEPTOR WITH INTEGRAL STORAGE COMPARTMENT

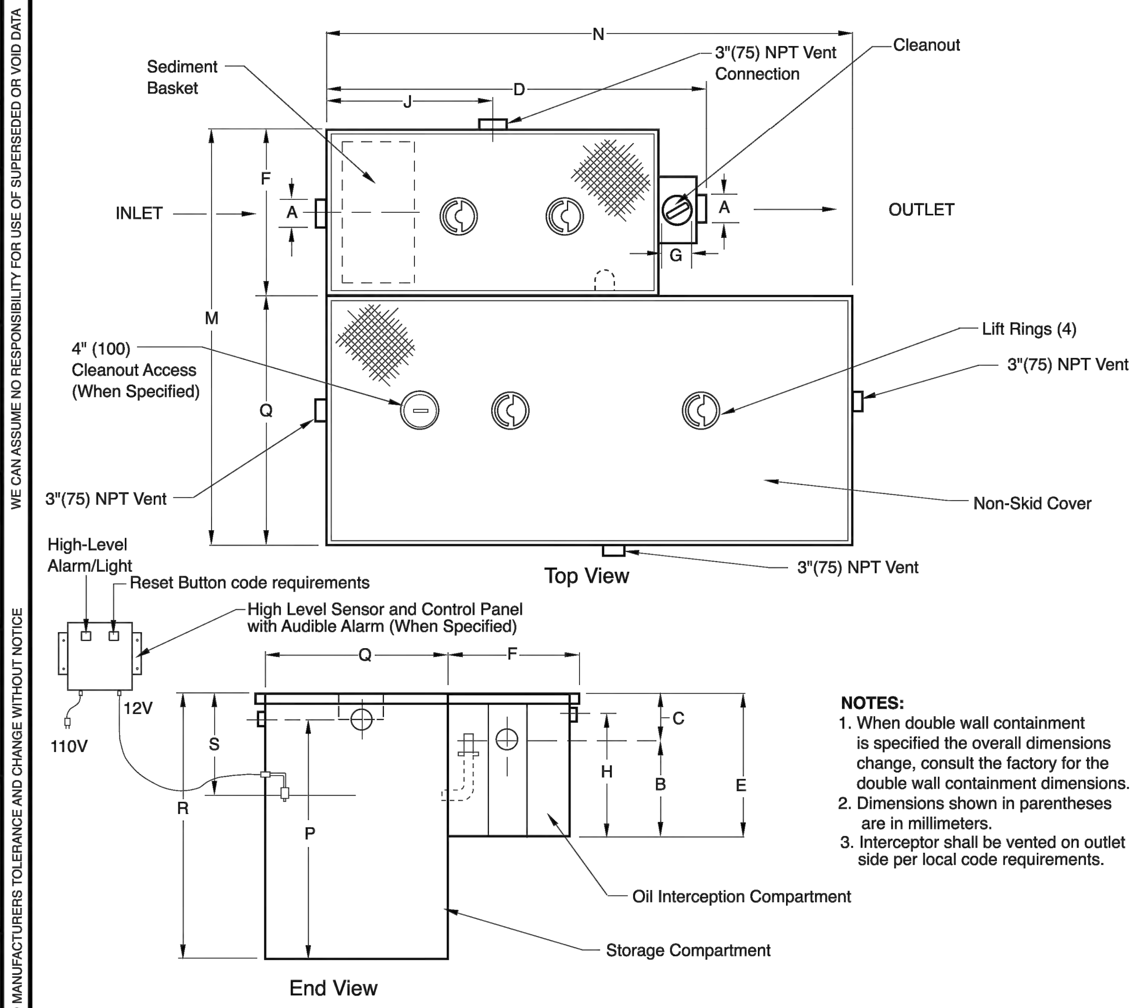

NOTES:
1. When double wall containment is specified the overall dimensions change, consult the factory for the double wall containment dimensions.
2. Dimensions shown in parentheses are in millimeters.
3. Interceptor shall be vented on outlet side per local code requirements.

REGULARLY FURNISHED:
Fabricated Steel with Diamond Plate Cover, Sediment Basket, Duco Coated Inside and Coal Tar Epoxy Outside, Complete with Flow Control Fitting.

VARIATIONS:
- [X] Traffic Rated Cover -H20
- [X] Double Wall Containtment - DWC (Note 1)
- [X] 4"(100) Cleanout Access
- [X] High Level Sensor and Control Panel -CBS
- [X] Extension -E (Specify Height eg: -E12 for 12" ext.) FIELD VERIFY & ADJUST

OPTIONAL MATERIALS:
- [X] Coal Tar Epoxy Inside

REFER TO BACK OF SHEET FOR CAPACITIES AND DIMENSIONS

REV.	DATE	DESCRIPTION	BY	CKD. BY
R	4-10-13	Rev. Variations	TBW	CL
Q	3-2-12	Rev. Reg. Furn., Opt. Mat.	TBW	SJM
P	10-29-09	Revised Regularly Furnished	RN	TWK

WEIGHT POUNDS | VOLUME CUBIC FEET | FIGURE NUMBER 8599 Series

FIGURE NUMBER 8599 Series — DRAWN BY: TBW — CHECKED BY: TD — APPROVED BY: TD — DATE: 8-10-90 — SCALE: NONE — SIZE: A — DRAWING NUMBER: 8599 Series — REV. R

DIMENSIONS ARE SUBJECT TO MANUFACTURERS TOLERANCE AND CHANGE WITHOUT NOTICE. WE CAN ASSUME NO RESPONSIBILITY FOR USE OF SUPERSEDED OR VOID DATA.

WARNING: Cancer and Reproductive Harm - www.P65Warnings.ca.gov

---

SMITH® JAY R. SMITH MFG. CO.® MEMBER OF MORRIS GROUP INTERNATIONAL, POST OFFICE BOX 3237, MONTGOMERY, ALABAMA 36109-0237 (USA), TEL: 334-277-8520 FAX: 334-272-7396 www.jrsmith.com — CUSTOMER DRIVEN SINCE 1926 — MEMBER OF:

LOCATION: City Yards Maintenance, Building #7 Car Wash, Winchester, VA

CAPACITIES AND DIMENSIONS

P-12

MODEL NUMBER	GPM	A*	B	C	D	E	F	G	H	J	Gals. Capacity	M	N	P	Q	R	S
	OIL INTERCEPTOR COMPARTMENT										STORAGE TANK COMPARTMENT						
●8599-10-5	10	02 (50)	9 1/2 (240)	3 3/4 (95)	21 1/4 (540)	13 1/4 (335)	13 (330)	2 (51)	9 3/4 (250)	9 1/2 (240)	5	24 (610)	21 1/4 (540)	10 1/4 (260)	11 (279)	13 1/4 (335)	9 1/4 (235)
8599-10-50	10	02 (50)	9 1/2 (240)	3 3/4 (95)	21 1/4 (540)	13 1/4 (335)	13 (330)	2 (51)	9 3/4 (250)	9 1/2 (240)	50	25 (635)	30 (760)	50 3/4 (1290)	12 (305)	55 (1397)	9 1/4 (235)
8599-15-50	15	02 (50)	12 (305)	3 1/2 (89)	25 (635)	15 1/2 (395)	14 (355)	2 (51)	12 (305)	10 1/4 (260)	50	26 (660)	30 (760)	50 3/4 (1290)	12 (305)	55 (1397)	9 3/4 (250)
8599-20-50	20	03 (75)	13 (330)	4 (100)	28 1/2 (725)	17 (430)	15 3/4 (400)	2 (51)	13 1/2 (345)	12 (305)	50	27 3/4 (705)	30 (760)	50 3/4 (1290)	12 (305)	55 (1397)	12 1/2 (320)
8599-25-100	25	03 (75)	15 1/4 (390)	4 1/2 (115)	30 (760)	19 3/4 (500)	16 3/4 (425)	2 (51)	16 1/4 (415)	12 3/4 (325)	100	31 3/4 (805)	50 3/4 (1290)	56 3/4 (1441)	15 (380)	61 (1550)	13 1/2 (345)
8599-35-100	35	03 (75)	16 (405)	5 (125)	32 1/2 (825)	21 (535)	18 1/4 (465)	2 (51)	17 1/2 (445)	14 1/2 (370)	100	33 1/4 (845)	50 3/4 (1290)	56 3/4 (1441)	15 (380)	61 (1550)	14 (355)
8599-50-100	50	03 (80)	17 1/2 (445)	6 3/4 (170)	35 1/2 (900)	24 1/4 (615)	20 3/4 (525)	2 (51)	20 3/4 (525)	16 (405)	100	35 1/4 (895)	50 3/4 (1290)	56 3/4 (1441)	15 (380)	61 (1550)	16 3/4 (425)
8599-75-100	75	04 (100)	21 1/2 (545)	15 1/2 (395)	50 3/4 (1290)	37 (940)	30 1/2 (775)	3 (76)	32 3/4 (830)	21 (535)	100	45 1/2 (1155)	50 3/4 (1290)	56 3/4 (1441)	15 (380)	61 (1550)	24 (610)
8599-100-250	100	04 (100)	27 (685)	16 1/2 (420)	54 3/4 (1390)	43 1/2 (1105)	33 1/2 (850)	3 (76)	39 1/4 (995)	23 (585)	250	58 1/2 (1485)	60 3/4 (1543)	60 3/4 (1543)	25 (635)	65 (1650)	25 (635)
8599-150-250	150	05 (125)	33 (840)	17 1/2 (445)	60 3/4 (1543)	50 1/2 (1283)	38 1/2 (980)	4 (100)	46 1/4 (1175)	25 1/2 (650)	250	63 1/2 (1613)	60 3/4 (1543)	60 3/4 (1543)	25 (635)	65 (1650)	27 (685)
8599-200-250	200	05 (125)	37 (940)	17 1/2 (445)	67 3/4 (1720)	54 1/2 (1385)	43 1/2 (1105)	4 (100)	50 1/4 (1275)	29 (735)	250	68 1/2 (1740)	60 3/4 (1543)	60 3/4 (1543)	25 (635)	65 (1650)	27 (685)
8599-250-500	250	05 (125)	40 (1015)	18 (455)	73 3/4 (1875)	58 (1473)	47 1/2 (1205)	4 (100)	53 3/4 (1365)	32 (815)	500	79 1/2 (2019)	90 3/4 (2305)	71 3/4 (1822)	32 (815)	76 (1930)	27 1/2 (700)
8599-300-500	300	05 (125)	43 1/2 (1105)	18 (455)	85 3/4 (2178)	61 1/2 (1562)	54 1/2 (1385)	4 (100)	57 1/4 (1454)	38 (965)	500	86 1/2 (2197)	90 3/4 (2305)	71 3/4 (1822)	32 (815)	76 (1930)	27 1/2 (700)
8599-350-500	350	05 (125)	43 1/2 (1105)	18 (455)	85 3/4 (2178)	61 1/2 (1562)	54 1/2 (1385)	4 (100)	57 1/4 (1454)	38 (965)	500	86 1/2 (2197)	90 3/4 (2305)	71 3/4 (1822)	32 (815)	76 (1930)	27 1/2 (700)
8599-400-500	400	06 (150)	43 1/2 (1105)	18 (455)	85 3/4 (2178)	61 1/2 (1562)	54 1/2 (1385)	4 (100)	57 1/4 (1454)	38 (965)	500	86 1/2 (2197)	90 3/4 (2305)	71 3/4 (1822)	32 (815)	76 (1930)	27 1/2 (700)
8599-450-500	450	06 (150)	48 (1220)	18 (455)	103 1/4 (2635)	66 (1675)	64 1/2 (1640)	5 (125)	61 3/4 (1570)	46 (1170)	500	96 1/2 (2451)	90 3/4 (2305)	71 3/4 (1822)	32 (815)	76 (1930)	28 (710)
8599-500-750	500	06 (150)	48 (1220)	18 (455)	103 1/4 (2635)	66 (1675)	64 1/2 (1640)	5 (125)	61 3/4 (1570)	46 (1170)	750	99 1/2 (2524)	103 1/4 (2635)	83 3/4 (2127)	35 (890)	88 (2235)	28 (710)

* Larger Inlet and Outlet Size Available Specify Required Size.

NOTE: Model number is defined as: 8599-10-50 — Series number; GPM flow rate for oil interceptor; Size of storage tank compartment in gallons.

● Recommended for Elevator Pits.

NOTE: Any unit exceeding 92"(2337mm) in width, 96"(2438mm) in height or weighing more than 3,500 lbs.(1.588 KG.) is an over sized and/or over weight product requiring special shipping and handling considerations. Contact Smith Customer Service as standard FFA terms do not apply.

NOTE: Dimensions shown in parentheses are in millimeters.

REV.	DATE	DESCRIPTION	BY	CKD. BY
E	2-17-16	Added Note	TBW	SJM
D	3-1-12	Rev. Table	TBW	SJM
C	05/25/07	Added 8599-10-5 to chart	JJ	JM
B	3-5-04	Revised Chart	RN	CL

P-12

WEIGHT POUNDS | VOLUME CUBIC FEET | FIGURE NUMBER 8599 SERIES BS

FIGURE NUMBER 8599 SERIES BS — DRAWN BY: EMB — CHECKED BY: BW — APPROVED BY: McD — DATE: 3-5-91 — SCALE: NONE — SIZE: A — DRAWING NUMBER: S8599BS — REV. E

DIMENSIONS ARE SUBJECT TO MANUFACTURERS TOLERANCE AND CHANGE WITHOUT NOTICE. WE CAN ASSUME NO RESPONSIBILITY FOR USE OF SUPERSEDED OR VOID DATA.

WARNING: Cancer and Reproductive Harm - www.P65Warnings.ca.gov

---

FIRE PROTECTON SCOPE OF WORK FOR BUILDINGS #2, #3 AND #7:

OBTAIN THE SERVICES OF A STATE QUALIFIED AND LICENSED SPRINKLER CONTRACTOR TO DESIGN, OBTAIN NECESSARY STATE AND LOCAL APPROVALS OF DESIGN FIRE PROTECTION SPRINKLER SYSTEM. CONTRCTOR SHALL DESIGN PER NFPA 13 & 230 CODE AND STATE CODE. FIRE PROTECTION CONTRACTOR SHALL SUBMIT COPIES OF THE DESIGN CALCULATIONS, FLOW TESTS, ETC. FOR ARCHITECT/ENGINEER APPROVAL AND SUBMIT REQUIRED COPIES TO LOCAL FIRE AUTHORITIES FOR APPROVAL PRIOR TO INSTALLATION OF SYSTEM. FIRE PROTECTION CONTRACTOR SHALL COORDINATE WITH GENERAL CONTRACTOR, MECHANICAL, PLUMBING AND ELECTRICAL CONTRACTOR TO ADJUST FOR INTERFERENCES AND ADJUST SPRINKLER DESIGN AND LAYOUT ACCORDINGLY. FIRE PROTECTION CONTRACTOR SHALL FIELD TEST THE SPRINKLER SYSTEM PER STATE AND LOCAL CODE AND NFPA 13 STANDARDS.
SPRINKLER SYSTEM SHALL BE WET-PIPE OR DRY-PIPE TYPE AND INSTALL TO AVOID ANY FREEZING CONDITIONS.
SPRINKLERS SHALL BE CONCEALED TYPE – IF INSTALLED IN SUSPENDED CEILING, THEN CENTER IN CEILING GRID.
PROVIDE NEW BACKFLOW PREVENTER & SHALL AS APPROVED BY THE VIRGINIA FIRE MARSHAL.
PROVIDE METER AS REQUIRED BY LOCAL WATER DEPARTMENT/FIRE MARSHAL.

SMITH® JAY R. SMITH MFG. CO.® MEMBER OF MORRIS GROUP INTERNATIONAL, POST OFFICE BOX 3237, MONTGOMERY, ALABAMA 36109-0237 (USA), TEL: 334-277-8520 FAX: 334-272-7396 www.jrsmith.com — CUSTOMER DRIVEN SINCE 1926 — MEMBER OF:

LOCATION: City Yards Maintenance, Building #7, Building #9 Wash Bay, Winchester, VA

P13 & P-14 TRAFFIC FLOOR DRAINS

HEAVY DUTY DRAINS WITH OFFSET OUTLET HINGED GRATE AND FREE STANDING SEDIMENT BUCKET

FUNCTION: Used in moderate traffic areas where hinged rectangular grate is required. Hinged top permits easy access for fast and frequent removal of sediment bucket.

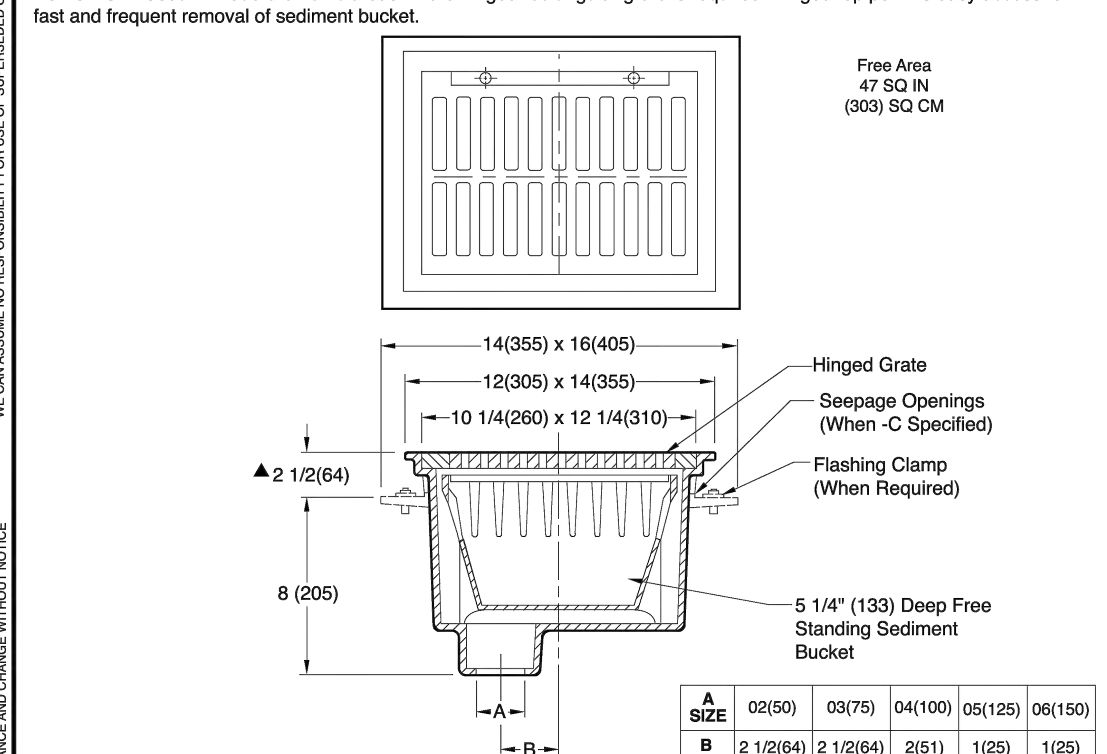

A SIZE	02(50)	03(75)	04(100)	05(125)	06(150)
B	2 1/2(64)	2 1/2(64)	2(51)	1(25)	1(25)

P-13
P-14

NOTE: Dimensions shown in parentheses are in millimeters.

- [ ] Fig. 2470C . . . LESS FLANGE
- [ ] Fig. 2473C . . . WITH FLANGE

▲ add 5/32"(4) when bronze top is specified.

REGULARLY FURNISHED:
Duco Cast Iron Body with Heavy Duty Hinged Grate and Cast Iron Sediment Bucket.

VARIATIONS:
- [ ] Flashing Clamp -C (Fig. 2473 only)
- [ ] NO-HUB Adaptor (Specify Fig. 2646Y)
- [ ] Vandal Proof Grate -U
- [ ] T Threaded Outlet
- [ ] Quad Close Trap Seal (Specify Fig. 2692)

OPTIONAL MATERIALS:
- [X] Aluminum Bucket -AB
- [X] Ductile Iron Grate -M
- [ ] Galvanized Cast Iron -G
- [ ] Nickel Bronze Top -NB
- [ ] Polished Bronze Top -PB
- [ ] Stainless Steel (Specify Fig. 9755)

REV.	DATE	DESCRIPTION	BY	CKD. BY
G	2-17-17	Revised Table, Variations	TBW	CL
F	7-2-15	Revised Variations	TBW	CL
E	8-23-05	Revised Dim	TBW	CL
D	4-9-97	Added Millimeters	EMB	BS

WEIGHT POUNDS | VOLUME CUBIC FEET | FIGURE NUMBER 2470, 2473

FIGURE NUMBER 2470, 2473 — DRAWN BY: CMB — CHECKED BY: McD — APPROVED BY: SB — DATE: 5-22-89 — SCALE: NONE — SIZE: A — DRAWING NUMBER: S2470 — REV. G

DIMENSIONS ARE SUBJECT TO MANUFACTURERS TOLERANCE AND CHANGE WITHOUT NOTICE. WE CAN ASSUME NO RESPONSIBILITY FOR USE OF SUPERSEDED OR VOID DATA.

WARNING: Cancer and Reproductive Harm - www.P65Warnings.ca.gov

---

NORTH (Building)

CITY YARDS MAINTENANCE FACILITY: RENOVATION AND ADDITIONS
301 EAST CORK ST.
WINCHESTER, VIRGINIA 22601

CITY OF WINCHESTER VIRGINIA

ARCHITECT: GDA

Seal

PAINTER-LEWIS, P.L.C.
817 CEDAR CREEK GRADE, SUITE 120
WINCHESTER, VIRGINIA 22601
Telephone: (540) 662-5792
Facsimile: (540) 662-5793
Email: office@painterlewis.com
CONSULTING ENGINEERS

COMMONWEALTH OF VIRGINIA — TIMOTHY G. PAINTER Lic. No. 018260 — PROFESSIONAL ENGINEER

M.E.P. ENGINEERS:
CDi
Comfort Designs Inc.
620 Pennsylvania Avenue
Winchester, VA 22604
540 665-2846

Seal

COMMONWEALTH OF VIRGINIA — ROGER L. CATLETT Lic. No. 010537 — 8/5/2019 — PROFESSIONAL ENGINEER

ISSUE/REVISIONS:

DRAWING TITLE: PHASE I & II PLUMBING

SHEET TITLE: PLUMBING FIXTURES & DETAILS

DATE:	AUGUST 5, 2019
PROJECT NO.:	1801014
SCALE:	AS NOTED
SHEET:	P1.2

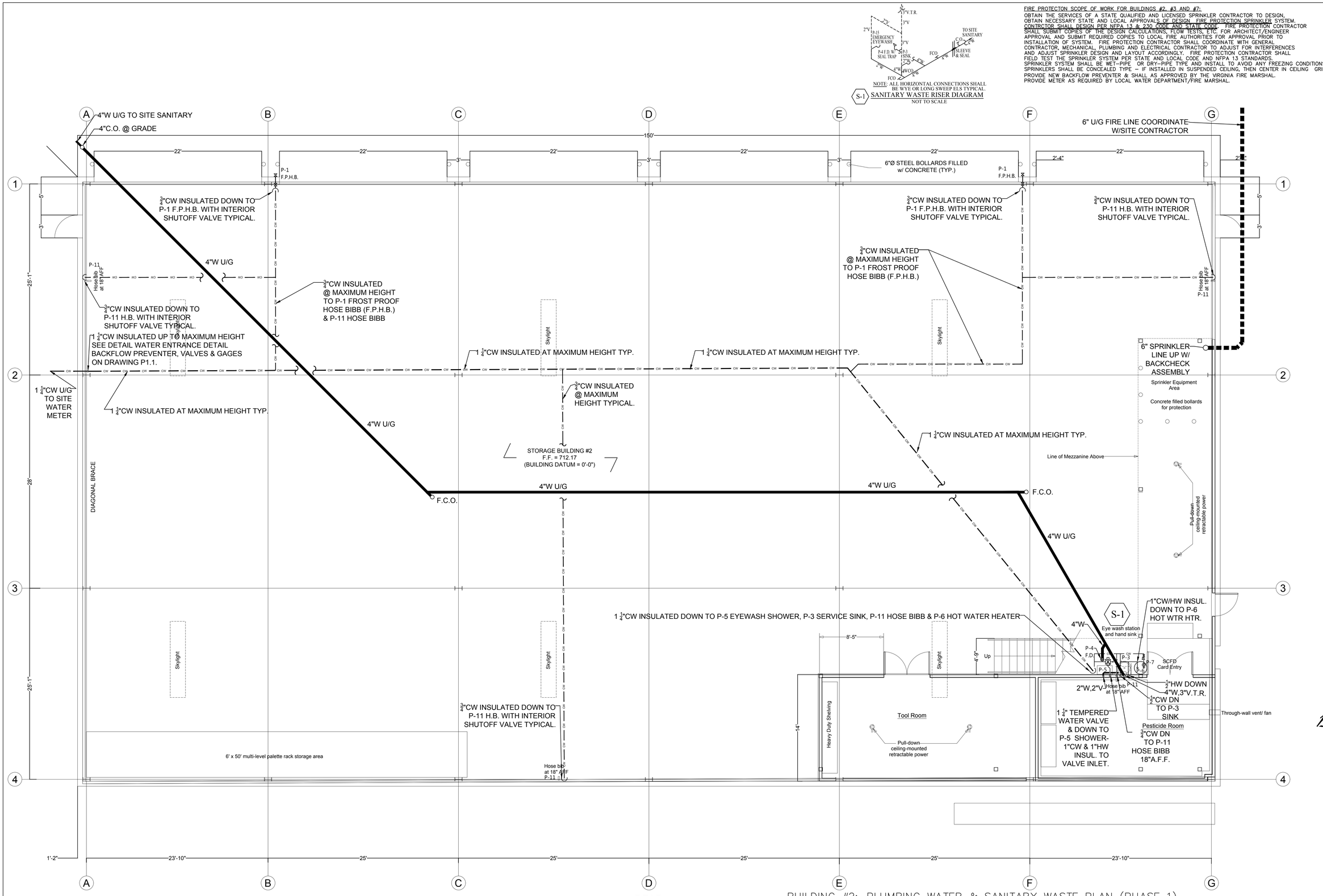

NOTE: ALL HORIZONTAL CONNECTIONS SHALL BE WYE OR LONG SWEEP ELS TYPICAL.

S-1 SANITARY WASTE RISER DIAGRAM

NOT TO SCALE

FIRE PROTECTON SCOPE OF WORK FOR BUILDINGS #2, #3 AND #7:
OBTAIN THE SERVICES OF A STATE QUALIFIED AND LICENSED SPRINKLER CONTRACTOR TO DESIGN, OBTAIN NECESSARY STATE AND LOCAL APPROVALS OF DESIGN FIRE PROTECTION SPRINKLER SYSTEM. CONTRCTOR SHALL DESIGN PER NFPA 13 & 230 CODE AND STATE CODE. FIRE PROTECTION CONTRACTOR SHALL SUBMIT COPIES OF THE DESIGN CALCULATIONS, FLOW TESTS, ETC. FOR ARCHITECT/ENGINEER APPROVAL AND SUBMIT REQUIRED COPIES TO LOCAL FIRE AUTHORITIES FOR APPROVAL PRIOR TO INSTALLATION OF SYSTEM. FIRE PROTECTION CONTRACTOR SHALL COORDINATE WITH GENERAL CONTRACTOR, MECHANICAL, PLUMBING AND ELECTRICAL CONTRACTOR TO ADJUST FOR INTERFERENCES AND ADJUST SPRINKLER DESIGN AND LAYOUT ACCORDINGLY. FIRE PROTECTION CONTRACTOR SHALL FIELD TEST THE SPRINKLER SYSTEM PER STATE AND LOCAL CODE AND NFPA 13 STANDARDS. SPRINKLER SYSTEM SHALL BE WET-PIPE OR DRY-PIPE TYPE AND INSTALL TO AVOID ANY FREEZING CONDITIONS. SPRINKLERS SHALL BE CONCEALED TYPE - IF INSTALLED IN SUSPENDED CEILING, THEN CENTER IN CEILING GRID. PROVIDE NEW BACKFLOW PREVENTER & SHALL AS APPROVED BY THE VIRGINIA FIRE MARSHAL. PROVIDE METER AS REQUIRED BY LOCAL WATER DEPARTMENT/FIRE MARSHAL.

BUILDING #2: PLUMBING WATER & SANITARY WASTE PLAN (PHASE 1)

SCALE: 3/16"=1'-0"

NORTH (Building)

CITY YARDS MAINTENANCE FACILITY: RENOVATION AND ADDITIONS
301 East Cork St.
Winchester, Virginia
22601

ARCHITECT:
GDA
Architecture Planning Interiors Landscape
Lisa Duff-Ollis
lisa@GDAassoc.com • GDAassoc.com
325 Millwright Lane
Gerrardstown WV 25420
304.267.7530
11 Old W Boscawen Street
Winchester, VA 22601
540.773.1200

Seal

PAINTER-LEWIS, P.L.C.
817 CEDAR CREEK GRADE, SUITE 120
WINCHESTER, VIRGINIA 22601
Telephone: (540) 662-5792
Facsimile: (540) 662-5793
Email: office@painterlewis.com
CONSULTING ENGINEERS

COMMONWEALTH OF VIRGINIA
TIMOTHY G. PAINTER
Lic. No. 018260
PROFESSIONAL ENGINEER

M.E.P. ENGINEERS:
CDi
Comfort Designs Inc.
620 Pennsylvania Avenue
Winchester, VA 22604
540 665-2846

Seal
COMMONWEALTH OF VIRGINIA
ROGER L. CATLETT
Lic. No. 010537
8/5/2019
PROFESSIONAL ENGINEER

ISSUE/REVISIONS:

DRAWING TITLE:
PHASE I
BUILDING #2

SHEET TITLE:
WATER & SANITARY WASTE PLAN

DATE:	AUGUST 5, 2019
PROJECT NO.:	1801014
SCALE:	AS NOTED
SHEET:	P2.1

FIRE PROTECTON SCOPE OF WORK FOR BUILDINGS #2, #3 AND #7:
OBTAIN THE SERVICES OF A STATE QUALIFIED AND LICENSED SPRINKLER CONTRACTOR TO DESIGN, OBTAIN NECESSARY STATE AND LOCAL APPROVALS OF DESIGN. FIRE PROTECTION SPRINKLER SYSTEM. CONTRCTOR SHALL DESIGN PER NFPA 13 & 230 CODE AND STATE CODE. FIRE PROTECTION CONTRACTOR SHALL SUBMIT COPIES OF THE DESIGN CALCULATIONS, FLOW TESTS, ETC. FOR ARCHITECT/ENGINEER APPROVAL AND SUBMIT REQUIRED COPIES TO LOCAL FIRE AUTHORITIES FOR APPROVAL PRIOR TO INSTALLATION OF SYSTEM. FIRE PROTECTION CONTRACTOR SHALL COORDINATE WITH GENERAL CONTRACTOR, MECHANICAL, PLUMBING AND ELECTRICAL CONTRACTOR TO ADJUST FOR INTERFERENCES AND ADJUST SPRINKLER DESIGN AND LAYOUT ACCORDINGLY. FIRE PROTECTION CONTRACTOR SHALL FIELD TEST THE SPRINKLER SYSTEM PER STATE AND LOCAL CODE AND NFPA 13 STANDARDS. SPRINKLER SYSTEM SHALL BE WET-PIPE OR DRY-PIPE TYPE AND INSTALL TO AVOID ANY FREEZING CONDITIONS. SPRINKLERS SHALL BE CONCEALED TYPE – IF INSTALLED IN SUSPENDED CEILING, THEN CENTER IN CEILING GRID.
PROVIDE NEW BACKFLOW PREVENTER & SHALL AS APPROVED BY THE VIRGINIA FIRE MARSHAL.
PROVIDE METER AS REQUIRED BY LOCAL WATER DEPARTMENT/FIRE MARSHAL.

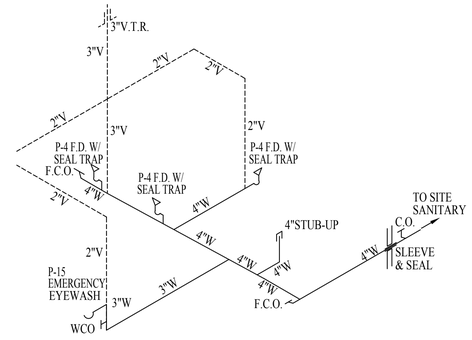

NOTE: ALL HORIZONTAL CONNECTIONS SHALL BE WYE OR LONG SWEEP ELS TYPICAL.

S-2 SANITARY WASTE RISER DIAGRAM
NOT TO SCALE

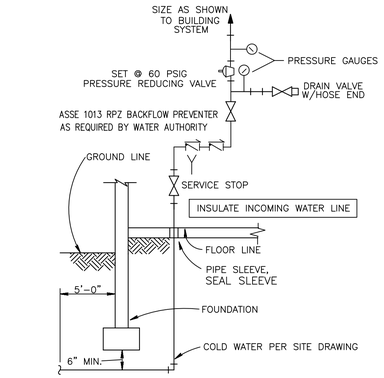

TYPICAL WATER SERVICE ENTRANCE DETAIL
N.T.S.

FRONT

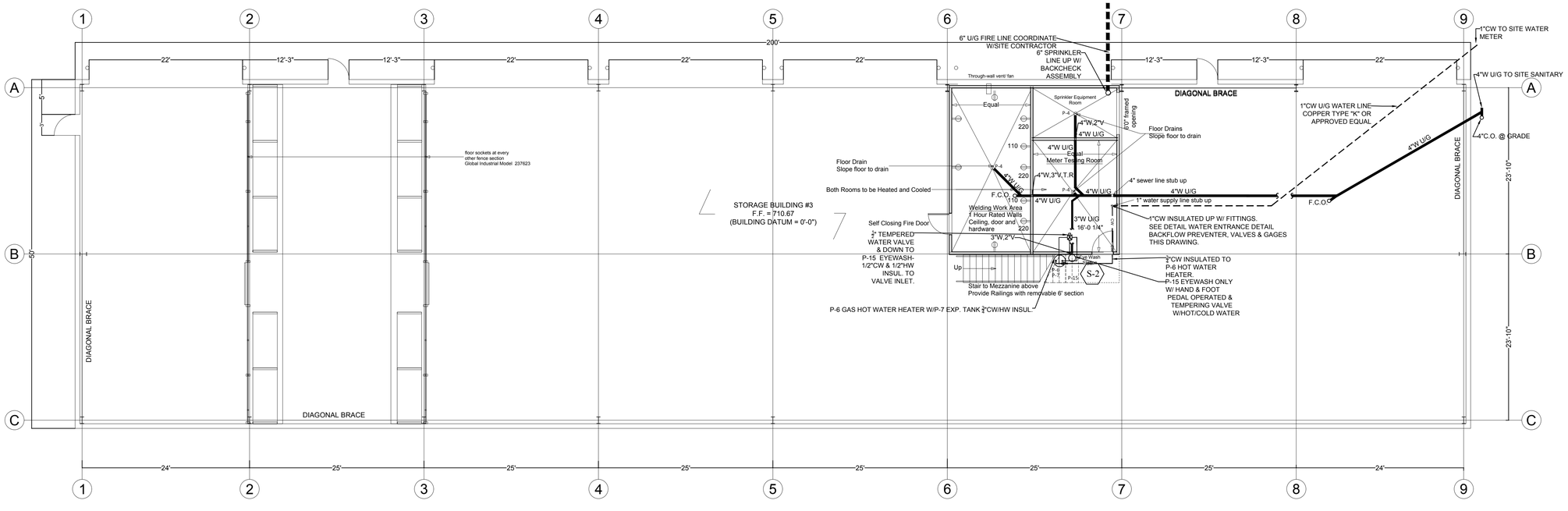

REAR

BUILDING #3: PLUMBING WATER & SANITARY WASTE PLAN (PHASE 1)
SCALE 1/8"=1'-0"

NORTH (Building)

CITY YARDS MAINTENANCE FACILITY: RENOVATION AND ADDITIONS
301 EAST CORK ST.
WINCHESTER, VIRGINIA
22601

ARCHITECT:
GDA

PAINTER-LEWIS, P.L.C.
817 CEDAR CREEK GRADE, SUITE 120
WINCHESTER, VIRGINIA 22601
Telephone: (540) 662-5792
Facsimile: (540) 662-5793
Email: office@painterlewis.com
CONSULTING ENGINEERS

Seal
COMMONWEALTH OF VIRGINIA
TIMOTHY G. PAINTER
Lic. No. 018260
PROFESSIONAL ENGINEER

M.E.P. ENGINEERS:
CDi
Comfort Designs Inc.
620 Pennsylvania Avenue
Winchester, VA 22604
540 665-2846

Seal
COMMONWEALTH OF VIRGINIA
ROGER L. CATLETT
Lic. No. 010537
8/5/2019
PROFESSIONAL ENGINEER

ISSUE/REVISIONS:

DRAWING TITLE:
PHASE I
BUILDING #3

SHEET TITLE:
WATER & SANITARY WASTE PLAN

DATE:	AUGUST 5, 2019
PROJECT NO.:	1801014
SCALE:	AS NOTED
SHEET:	P2.2

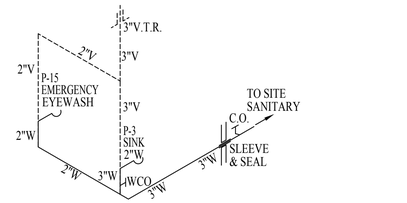

NOTE: ALL HORIZONTAL CONNECTIONS SHALL BE WYE OR LONG SWEEP ELS TYPICAL.

S-3 SANITARY WASTE RISER DIAGRAM

NOT TO SCALE

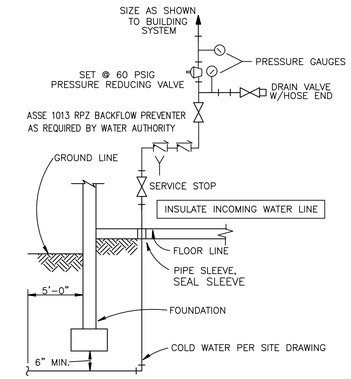

TYPICAL WATER SERVICE ENTRANCE DETAIL

N.T.S.

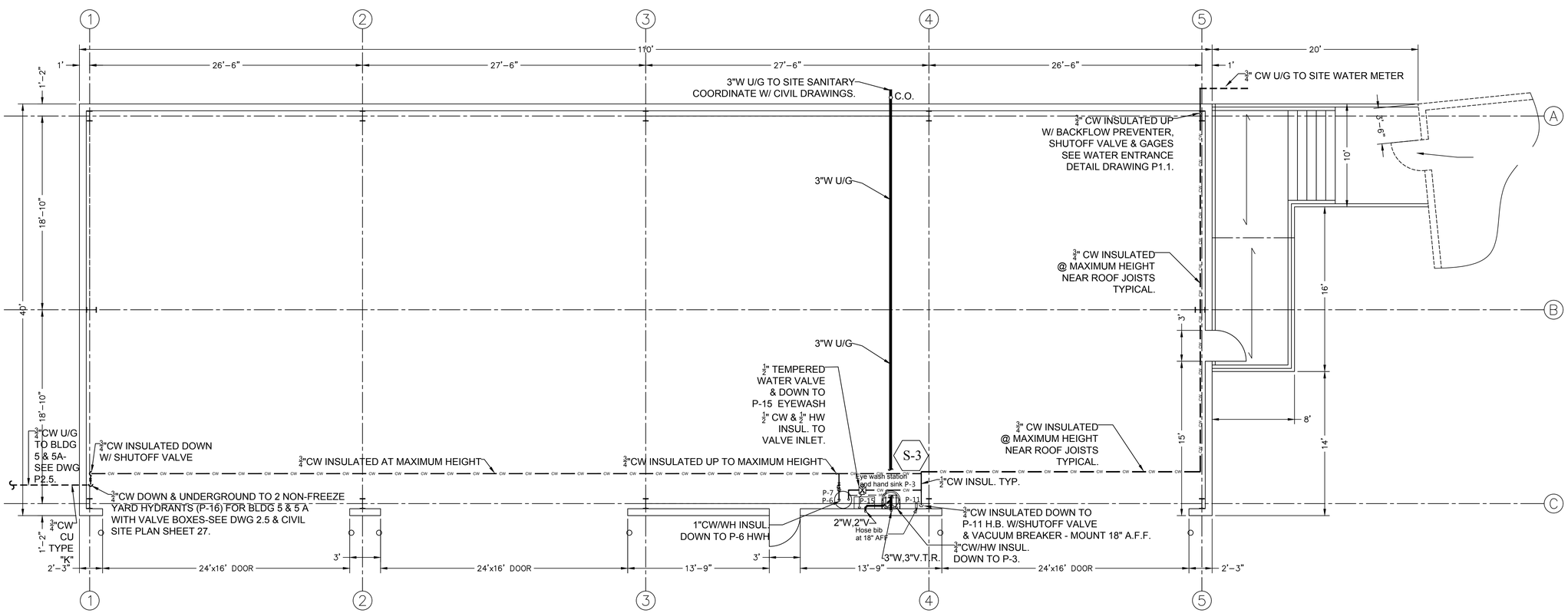

BUILDING #6: PLUMBING WATER & SANITARY WASTE PLAN (PHASE 1)

SCALE: 3/16"=1'-0"

NORTH (Building)

CITY YARDS MAINTENANCE FACILITY: RENOVATION AND ADDITIONS
301 EAST CORK ST.
WINCHESTER, VIRGINIA
22601

ARCHITECT:

GDA

PAINTER-LEWIS, P.L.C.
817 CEDAR CREEK GRADE, SUITE 120
WINCHESTER, VIRGINIA 22601
Telephone: (540) 662-5792
Facsimile: (540) 662-5793
Email: office@painterlewis.com
CONSULTING ENGINEERS

COMMONWEALTH OF VIRGINIA
TIMOTHY G. PAINTER
Lic. No. 018260
PROFESSIONAL ENGINEER

M.E.P. ENGINEERS:

CDi
Comfort Designs Inc.
620 Pennsylvania Avenue
Winchester, VA 22604
540 665-2846

Seal

COMMONWEALTH OF VIRGINIA
ROGER L. CATLETT
Lic. No. 010537
8/5/2019
PROFESSIONAL ENGINEER

ISSUE/REVISIONS:

DRAWING TITLE:
PHASE I
BUILDING #6

SHEET TITLE:
WATER & SANITARY WASTE PLAN

DATE: AUGUST 5, 2019
PROJECT NO.: 1801014
SCALE: AS NOTED
SHEET: P2.3

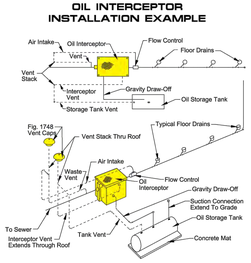

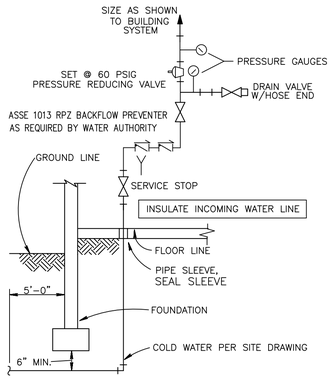

TYPICAL WATER SERVICE ENTRANCE DETAIL

N.T.S.

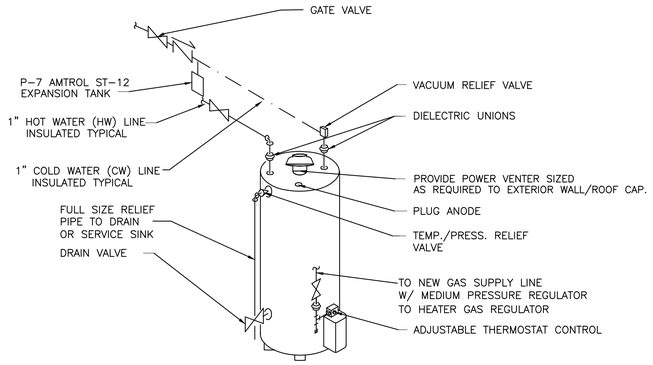

P-6 WATER HEATER DETAIL

N.T.S.

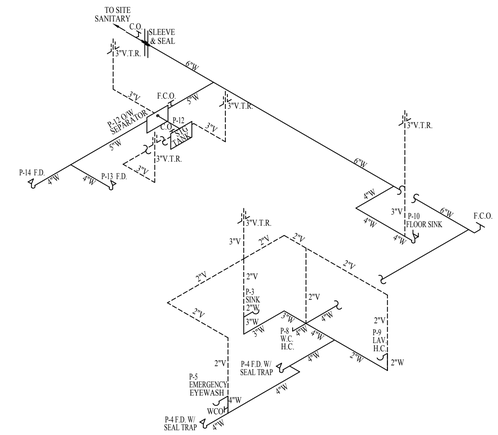

NOTE: ALL HORIZONTAL CONNECTIONS SHALL BE WYE OR LONG SWEEP ELS TYPICAL.

S-4 SANITARY WASTE RISER DIAGRAM

NOT TO SCALE

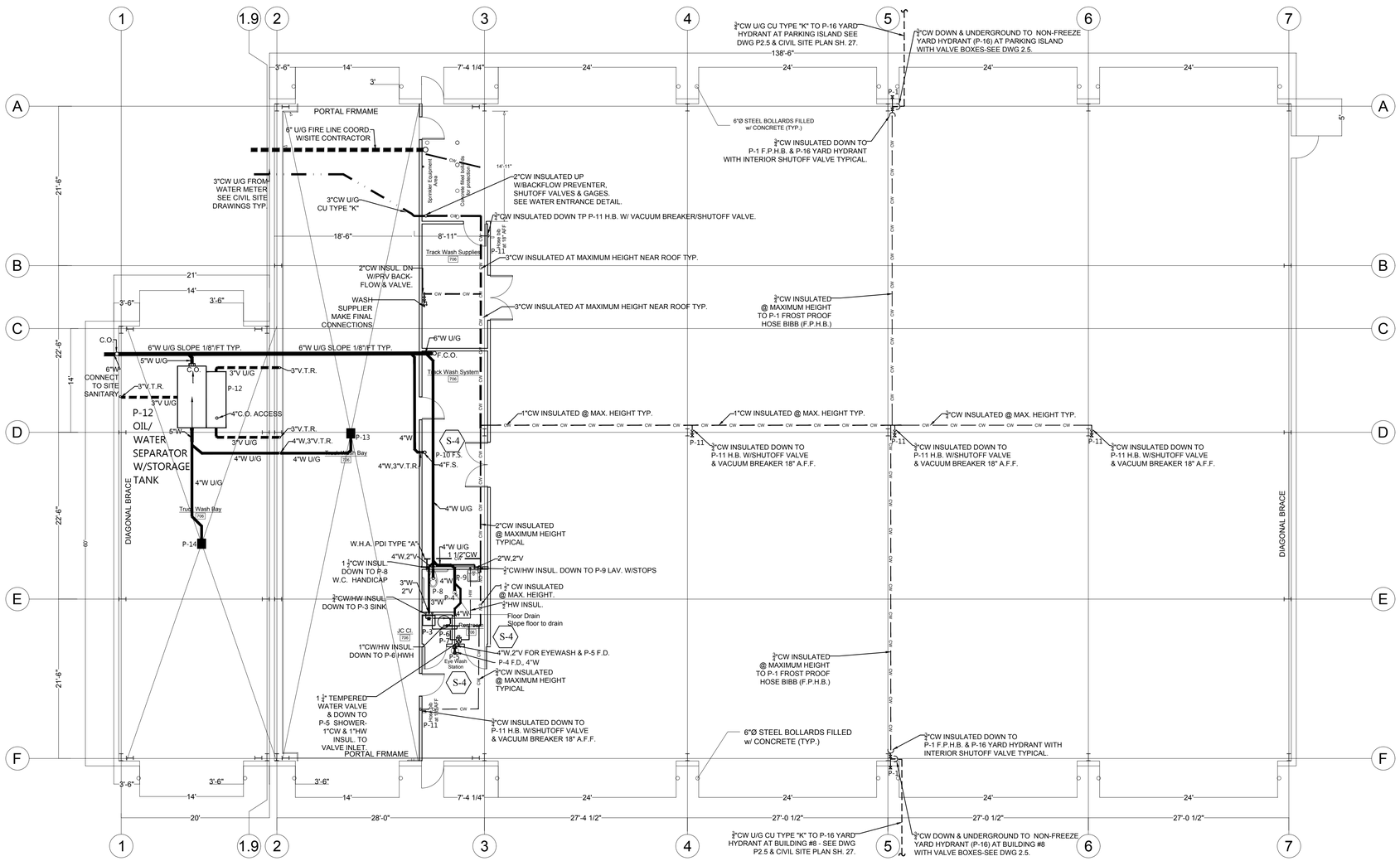

BUILDING #7: PLUMBING WATER & SANITARY WASTE PLAN (PHASE II)

SCALE $\frac{1}{8}$"=1'-0"

FIRE PROTECTON SCOPE OF WORK FOR BUILDINGS #2, #3 AND #7:

OBTAIN THE SERVICES OF A STATE QUALIFIED AND LICENSED SPRINKLER CONTRACTOR TO DESIGN, OBTAIN NECESSARY STATE AND LOCAL APPROVALS OF DESIGN. FIRE PROTECTION SPRINKLER SYSTEM. CONTRCTOR SHALL DESIGN PER NFPA 13 & 230 CODE AND STATE CODE. FIRE PROTECTION CONTRACTOR SHALL SUBMIT COPIES OF THE DESIGN CALCULATIONS, FLOW TESTS, ETC. FOR ARCHITECT/ENGINEER APPROVAL AND SUBMIT REQUIRED COPIES TO LOCAL FIRE AUTHORITIES FOR APPROVAL PRIOR TO INSTALLATION OF SYSTEM. FIRE PROTECTION CONTRACTOR SHALL COORDINATE WITH GENERAL CONTRACTOR, MECHANICAL, PLUMBING AND ELECTRICAL CONTRACTOR TO ADJUST FOR INTERFERENCES AND ADJUST SPRINKLER DESIGN AND LAYOUT ACCORDINGLY. FIRE PROTECTION CONTRACTOR SHALL FIELD TEST THE SPRINKLER SYSTEM PER STATE AND LOCAL CODE AND NFPA 13 STANDARDS. SPRINKLER SYSTEM SHALL BE WET–PIPE OR DRY–PIPE TYPE AND INSTALL TO AVOID ANY FREEZING CONDITIONS. SPRINKLERS SHALL BE CONCEALED TYPE – IF INSTALLED IN SUSPENDED CEILING, THEN CENTER IN CEILING GRID. PROVIDE NEW BACKFLOW PREVENTER & SHALL AS APPROVED BY THE VIRGINIA FIRE MARSHAL. PROVIDE METER AS REQUIRED BY LOCAL WATER DEPARTMENT/FIRE MARSHAL.

NORTH (Building)

CITY YARDS MAINTENANCE FACILITY: RENOVATION AND ADDITIONS
301 EAST CORK ST.
WINCHESTER, VIRGINIA
22601

ARCHITECT:

GDA

Seal

PAINTER-LEWIS, P.L.C.
817 CEDAR CREEK GRADE, SUITE 120
WINCHESTER, VIRGINIA 22601
Telephone: (540) 662–5792
Facsimile: (540) 662–5793
Email: office@painterlewis.com
CONSULTING ENGINEERS

COMMONWEALTH OF VIRGINIA
TIMOTHY G. PAINTER
Lic. No. 018260
PROFESSIONAL ENGINEER

M.E.P. ENGINEERS:
CDi
Comfort Designs Inc.
620 Pennsylvania Avenue
Winchester, VA 22604
540 665–2846

Seal
COMMONWEALTH OF VIRGINIA
ROGER L. CAILETT
Lic. No. 010537
8/5/2019
PROFESSIONAL ENGINEER

ISSUE/REVISIONS:

DRAWING TITLE:
PHASE II
BUILDING #7

SHEET TITLE:
WATER & SANITARY WASTE PLAN

DATE:	AUGUST 5, 2019
PROJECT NO.:	1801014
SCALE:	AS NOTED
SHEET:	P2.4

IOWA® hydrants are intended for irrigation purposes and used for filling field spray equipment, cleaning tools and equipment, lawn and garden care, watering livestock - immediate water flow even in sub-zero temperatures.

P-16 *Freezeless* IOWA® Yard Hydrant Model Y34 & Y1

WOODFORD

Galvanized Steel Pipe Standard
Optional Add SS - Stainless Steel
Optional Add BR - Brass

Specifications:

Female Inlet: Model Y34 - ¾" NPT
Model Y1 - 1" NPT

Casing: Model Y34 - 1" Galvanized Steel Pipe
Model Y1 - 1¼" Galvanized Steel Pipe

Operating Rod: ¾" Galvanized Steel Pipe

Drain Hole: Tapped - ⅛" N.P.T.

Removable Nozzle: ¾" Brass Male Hose Nozzle

Optional At Additional Cost:
1" Brass Pipe Outer Casing
¾" Brass Pipe Operating Pipe
Y34 ONLY:
1" Stainless Steel Outer Casing
¾" Stainless Steel Operating Pipe
1" NPSH Hose Nozzle

Features:

- **Adjustable Link** - Provides easy and positive adjustment of the lever lock tension.
- **Rod Guide** - Eliminates side pull on rod, reduces wear on packing, packing nut & stem.
- **Flow Finder and Lock** - A simple cam that can be set to automatically obtain the same flow each time or lock against accidental opening.
- **Long Life Packing** - Graphite packing for lubricity and long life.
- **One Piece Variable Flow Plunger** - Large cushion type seal for longer life - is not easily damaged and assures shut-off even when foreign particles are present. Automatic drain feature - plunger opens drain to prevent freezing - closes at any flow to prevent wasting water.
- **Maintenance & Repair** - Woodford has manufactured the IOWA® hydrant since 1929, and although many improvements have been made through the years, all parts are interchangeable. All repairs can be made from top of unit without removing hydrant from the ground.
- **Maximum Working Pressure:** 125 p.s.i.
- **Maximum Temperature:** 120° F

Rough-In

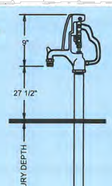

SHIPPING WEIGHT P-16

Bury Depth (Ft)	1	2	3	4	5	6*	7*
Model Y34 (Lbs)	15	17	19	22	24	26	28
Model Y1 (Lbs)	18	20	22	25	28	31	34

*Must ship by truck line due to length.

For Installation / Troubleshooting Instructions go to www.woodfordmfg.com or call 1-800-621-6032

When ordering, specify model and bury depth.

©2017 WOODFORD Mfg. Rev. 07/17 Form No. Y34.106

CURB BOXES - IMPROVED EXTENSION TYPE WITH ARCH PATTERN BASE P-16

Mueller Co. Reliable Connections

7.25

Shaded area indicates change Rev. 9-09

P-16

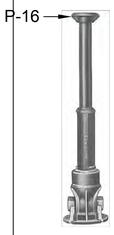

Improved extension type curb box with arch pattern base - for 1/2" through 2" curb valves

The arch extends around the curb valve and has a large foot surface to transmit loads into the ground beneath the curb valve, rather than to the curb valve itself. The box is cast iron and is furnished with a cast iron lid and brass pentagon plug. The upper part of the box is spring loaded and telescopes into the base to allow for grade adjustment within the range given in the dimensions charts. Stationary rods (Stainless Steel optional), shut-off rods and pentagon keys are optional and are ordered separately.

P-16

Foot piece (valve not included)

Optional foot pieces
Optional foot pieces provide a firm base for the curb valve and helps to prevent the curb valve from moving when the valve is operated. This is especially important when a plastic service line is used.

Box Selection

Curb valve and size	Box: Catalog number	Box: Inside diameter	Optional foot piece
300" Ball			
3/4"	H-10385	1-1/4"	H-10396
	H-10316	2"	H-10391
1"	H-10385	1-1/4"	H-10397
	H-10316	2"	H-10401**
1-1/2"	H-10386	1-1/4"	H-10400
	H-10336	2"	-
2"	H-10336	2"	-
Mark II®			
3/4"	H-10385	1-1/4"	H-10396
	H-10316	2"	H-10391
1"	H-10385	1-1/4"	H-10397
	H-10316	2"	H-10401**
1-1/4"	H-10336	2"	-
1-1/2"	H-10386	1-1/4"	H-10400
	H-10336	2"	-
2"	H-10336	2"	-
ORISEAL III®			
3/4"	H-10385	1-1/4"	H-10396
	H-10316	2"	H-10391
1"	H-10385	1-1/4"	H-10397
	H-10316	2"	H-10401**
ORISEAL®			
3/4"	H-10385	1-1/4"	H-10396
1"	H-10385	1-1/4"	H-10397
1-1/2"	H-10336	1-1/4"	H-10400
2"	H-10336	1-1/4"	H-10400

SITE PLAN PLUMBING SCOPE:

1. PLUMBING CONTRACTOR SHALL PROVIDE P-16 NON-FREEZE YARD HYDRANTS WITH VALVE BOXES AND BALL SHUTOFF VALVE AS SHOWN ON SITE PLAN IN 5 LOCATIONS AND PROVIDE COPPER TYPE "K" UNDERGROUND WATER LINES FROM BUILDING OR METER TO THE YARD HYDRANTS.
2. PLUMBING CONTRACTOR SHALL COORDINATE WITH SITE CONTRACTOR AND OTHER UTILITY CONTRACTORS ON INSTALLATION OF THE UNDERGROUND PIPING AND YARD HYDRANTS.
3. PLUMBING CONTRACTOR SHALL PAY AND OBTAIN NECESSARY FEES TO INSTALL THE YARD HYDRANTS AND FOR ALL CITY BUILDING INSPECTIONS. UNDERGROUND LINES SHALL BE FLUSHED, PRESSURE TESTED PER CODE AND SANITIZE DPER STATE AND LOCAL CODES.

*** Foot piece not useable with valves having IPS PE MUELLER 110® Compression connections.*

TO ORDER BOXES SPECIFY EXTENDED LENGTH, SIZE OF MINNEAPOLIS THREAD AND CATALOG NUMBER

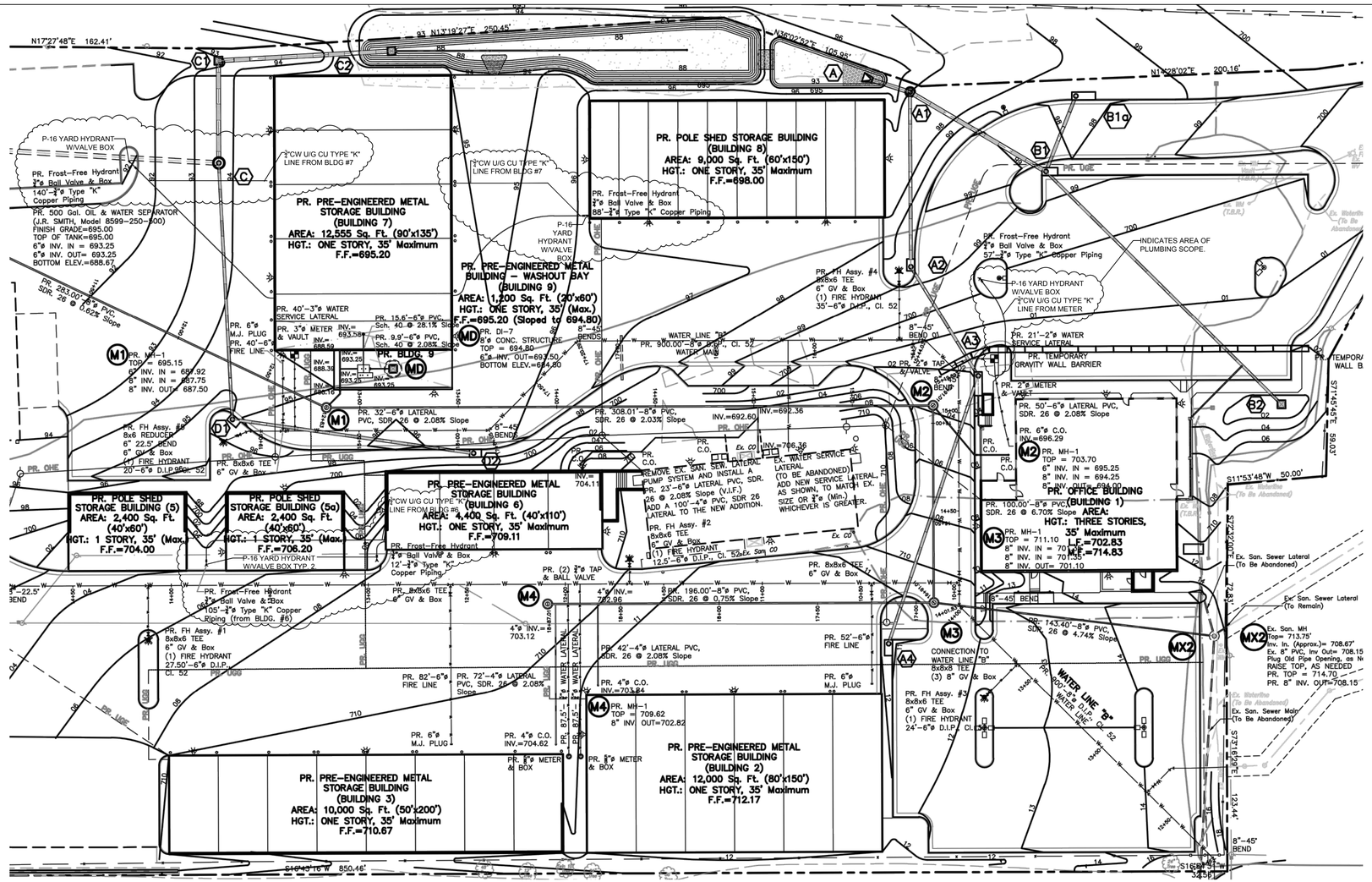

SITE PLAN SHOWING LOCATIONS OF NON-FREEZE YARD HYDRANTS W/SHUT-OFF VALVES & BOXES (TYP. 5)

SCALE 1/32"= 1'-0"

NORTH (Building)

CITY YARDS MAINTENANCE FACILITY: RENOVATION AND ADDITIONS
301 EAST CORK ST.
WINCHESTER, VIRGINIA
22601

ARCHITECT:

GDA Architecture Planning Interiors Landscape

Seal

PAINTER-LEWIS, P.L.C.
817 CEDAR CREEK GRADE, SUITE 120
WINCHESTER, VIRGINIA 22601
Telephone: (540) 662-5792
Facsimile: (540) 662-5793
Email: office@painterlewis.com
CONSULTING ENGINEERS

COMMONWEALTH OF VIRGINIA
TIMOTHY G. PAINTER
Lic. No. 018260
PROFESSIONAL ENGINEER

M.E.P. ENGINEERS:

CDi
Comfort Designs Inc.
620 Pennsylvania Avenue
Winchester, VA 22604
540 665-2846

Seal

COMMONWEALTH OF VIRGINIA
ROGER L. CATLETT
Lic. No. 010537
8/5/2019
PROFESSIONAL ENGINEER

ISSUE/REVISIONS:

DRAWING TITLE: PHASE I & II SITE HYDRANTS

SHEET TITLE: SITE YARD HDYRANTS PLAN

DATE: AUGUST 5, 2019
PROJECT NO.: 1801014
SCALE: AS NOTED
SHEET: P2.5

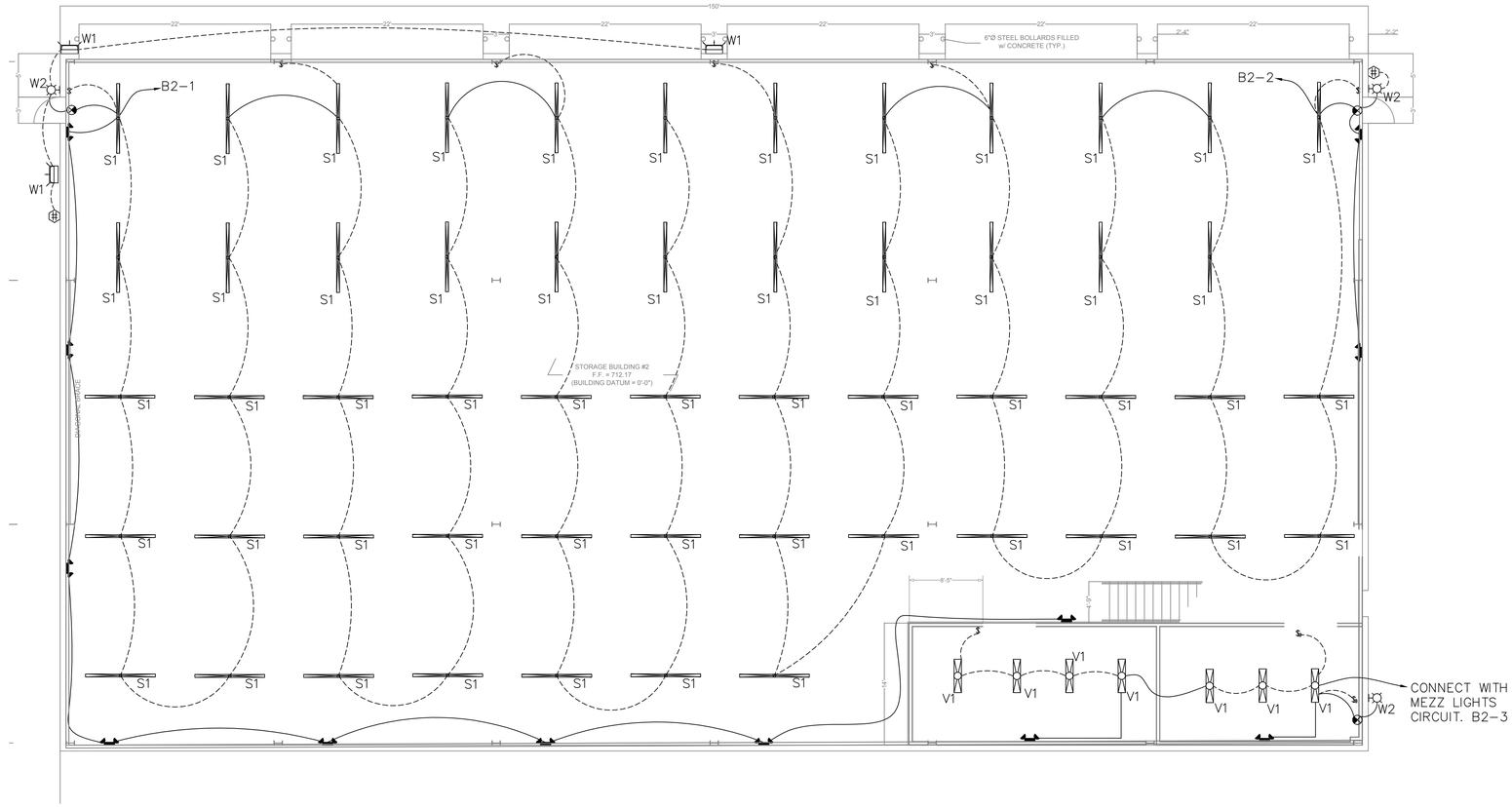

BUILDING #2: LIGHTING PLAN

SCALE: 1/8"=1'-0"

FIXTURE SCHEDULE		
SYMBOL	TYPE	DESCRIPTION/MODEL
○	D1	6" LED DOWNLIGHT– HE WILLIAMS– 6DR–TL–L30/835–DIM–UNV
	S1	8' STANDARD STRIP LED FIXTURE – HE WILLIAMS 76–8–L64/835–WG–7614–DRV–UNV
	S2	8' STANDARD STRIP LED FIXTURE – HE WILLIAMS 76–8–L106/835–WG–7614–DRV–UNV
	S3	2X4 RECESSED LED FIXTURE– HE WILLIAMS–LP–24–L50/835–DIM–UNV
	S4	1X4 STANDARD STRIP–HE WILLIAMS– 76–4–L32/835–DRV–UNV
	W2	DECORATIVE LED EMERGENCY LIGHT – HE WILLIAMS – EMER/DECO – WHT – LT – D
		LED EXIT SIGN – HE WILLIAMS – EXIT – R – EM – WHT – SDT – D
		LED EMERGENCY LIGHT – HE WILLIAMS – EMER/LED – WHT – SDT – D
	W1	LED EXTERIOR WALL PACK– LITHONIA– DSXW1LED 10C 350 30K TFTM MVOLT
	V1	FULLY ENCLOSED & GASKETED INDUSTRIAL LED– HE WILLIAMS– 96–4–L40/835–HIAFR–SS LATCH–DRV–UNV

LIGHTING SYMBOL LIST	
ALL JUNCTION BOXES AND OUTLETS SHALL HAVE A MECHANICALLY PRINTED PERMANENT LABEL ATTACHED INDICATING WHICH CIRCUIT AND PANEL SERVES THE JUNCTION BOX OR OUTLET.	
SYMBOL	DESCRIPTION
$	WALL SWITCH, 3 DENOTES 3–WAY OPERATION, 4 DENOTES 4–WAY OPERATION, D DENOTES FIXTURE COMPATIBLE DIMMER SWITCH, FAN DENOTES FAN COMPATIBLE SWITCH. ADA MOUNTING HEIGHT. WP DENOTES WEATHER PROOF COVER.
	PHOTOCELL SENSOR
	DASHED LINE REPRESENTS SWITCHED WIRING BETWEEN FIXTURES IN A SWITCHED GROUP. CONTAINS SWITCHED CONDUCTORS AND DIMMING CONTROL WIRES (0–10V) FOR DIMMING CIRCUITS. MAY ALSO CONTAIN UN–SWITCHED CONDUCTORS FOR CIRCUIT CONTINUATION OR EMERGENCY LIGHTING.
	UN–SWITCHED WIRING.
M	DENOTES LIGHT SWITCH FOR MEZZANINE AREA. FIELD COORDINATE LOCATION OF SWITCH PRIOR TO INSTALLATION.

NORTH (Building)

CITY YARDS MAINTENANCE FACILITY: RENOVATION AND ADDITIONS
301 EAST CORK ST.
WINCHESTER, VIRGINIA 22601

ARCHITECT:

Seal

PAINTER-LEWIS, P.L.C.
817 CEDAR CREEK GRADE, SUITE 120
WINCHESTER, VIRGINIA 22601
Telephone: (540) 662–5792
Facsimile: (540) 662–5793
Email: office@painterlewis.com
CONSULTING ENGINEERS

COMMONWEALTH OF VIRGINIA
TIMOTHY G. PAINTER
Lic. No. 018260
PROFESSIONAL ENGINEER

M.E.P. ENGINEERS:

Comfort Designs Inc.
620 Pennsylvania Avenue
Winchester, VA 22604
540 665–2846

Seal

COMMONWEALTH OF VIRGINIA
M. Howell
MICHAEL F. HOWELL
No.008875
5 AUG 2019
PROFESSIONAL ENGINEER

ISSUE/REVISIONS:

DRAWING TITLE:
PHASE I
BUILDING 2

SHEET TITLE:
LIGHTING PLAN

DATE: AUGUST 5, 2019
PROJECT NO.: 1801014
SCALE: AS NOTED
SHEET: E1.1

COM*check* Software Version 4.1.0.0

Interior Lighting Compliance Certificate

Section 1: Project Information

Energy Code: **2009 IECC**
Project Title: CITY YARDS BLDG. 2
Project Type: New Construction

Construction Site:
301 E. CORK STREET
WINCHESTER, VA 22601

Owner/Agent:

Designer/Contractor:

Section 2: Interior Lighting and Power Calculation

A Area Category	B Floor Area (ft2)	C Allowed Watts / ft2	D Allowed Watts (B x C)
Warehouse	15016	0.8	12013
		Total Allowed Watts =	12013

Section 3: Interior Lighting Fixture Schedule

A Fixture ID : Description / Lamp / Wattage Per Lamp / Ballast	B Lamps/ Fixture	C # of Fixtures	D Fixture Watt.	E (C X D)
Warehouse (15016 sq.ft.)				
LED 1: Other:	1	55	43	2365
LED 2: Other:	1	9	30	270
			Total Proposed Watts =	2635

Section 4: Requirements Checklist

Interior Lighting PASSES. Design 78% better than code.

Lighting Wattage:

☐ 1. Total proposed watts must be less than or equal to total allowed watts.

Allowed Watts	Proposed Watts	Complies
12013	2635	YES

Section 5: Compliance Statement

Compliance Statement: The proposed lighting design represented in this document is consistent with the building plans, specifications and other calculations submitted with this permit application. The proposed lighting system has been designed to meet the 2009 IECC requirements in COM*check* Version 4.1.0.0 and to comply with the mandatory requirements in the Requirements Checklist.

Heather Bowers — Heather Bowers — 7-26-19
Name - Title — Signature — Date

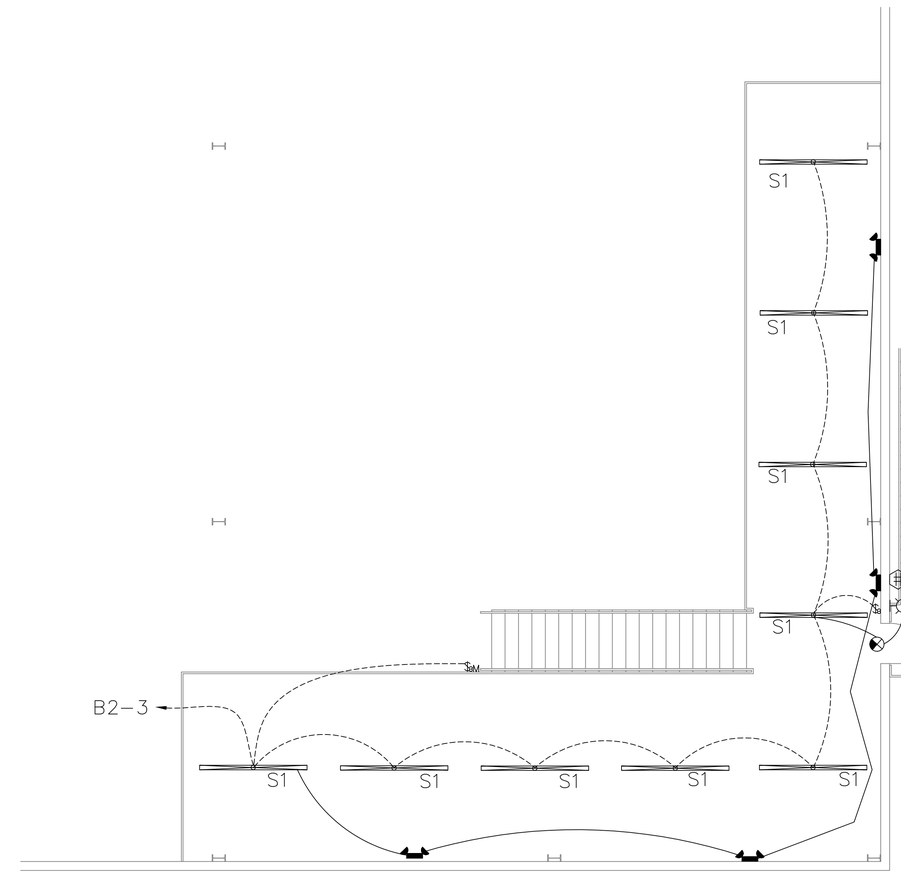

BUILDING #2: MEZZ LIGHTING PLAN

SCALE: $\frac{3}{16}$"=1'-0"

FIXTURE SCHEDULE		
SYMBOL	TYPE	DESCRIPTION/MODEL
○	D1	6" LED DOWNLIGHT– HE WILLIAMS– 6DR–TL–L30/835–DIM–UNV
	S1	8' STANDARD STRIP LED FIXTURE – HE WILLIAMS 76–8–L64/835–WG–7614–DRV–UNV
	S2	8' STANDARD STRIP LED FIXTURE – HE WILLIAMS 76–8–L106/835–WG–7614–DRV–UNV
	S3	2X4 RECESSED LED FIXTURE– HE WILLIAMS–LP–24–L50/835–DIM–UNV
	S4	1X4 STANDARD STRIP–HE WILLIAMS– 76–4–L32/835–DRV–UNV
	W2	DECORATIVE LED EMERGENCY LIGHT – HE WILLIAMS – EMER/DECO – WHT – LT – D
		LED EXIT SIGN – HE WILLIAMS – EXIT – R – EM – WHT – SDT – D
		LED EMERGENCY LIGHT – HE WILLIAMS – EMER/LED – WHT – SDT – D
	W1	LED EXTERIOR WALL PACK– LITHONIA– DSXW1LED 10C 350 30K TFTM MVOLT
	V1	FULLY ENCLOSED & GASKETED INDUSTRIAL LED– HE WILLIAMS– 96–4–L40/835–HIAFR–SS LATCH–DRV–UNV

LIGHTING SYMBOL LIST	
ALL JUNCTION BOXES AND OUTLETS SHALL HAVE A MECHANICALLY PRINTED PERMANENT LABEL ATTACHED INDICATING WHICH CIRCUIT AND PANEL SERVES THE JUNCTION BOX OR OUTLET.	
SYMBOL	DESCRIPTION
$	WALL SWITCH, 3 DENOTES 3–WAY OPERATION, 4 DENOTES 4–WAY OPERATION, D DENOTES FIXTURE COMPATIBLE DIMMER SWITCH, FAN DENOTES FAN COMPATIBLE SWITCH. ADA MOUNTING HEIGHT. WP DENOTES WEATHER PROOF COVER.
	PHOTOCELL SENSOR
	DASHED LINE REPRESENTS SWITCHED WIRING BETWEEN FIXTURES IN A SWITCHED GROUP. CONTAINS SWITCHED CONDUCTORS AND DIMMING CONTROL WIRES (0–10V) FOR DIMMING CIRCUITS. MAY ALSO CONTAIN UN–SWITCHED CONDUCTORS FOR CIRCUIT CONTINUATION OR EMERGENCY LIGHTING.
	UN–SWITCHED WIRING.
M	DENOTES LIGHT SWITCH FOR MEZZANINE AREA. FIELD COORDINATE LOCATION OF SWITCH PRIOR TO INSTALLATION.

NORTH (Building)

CITY YARDS MAINTENANCE FACILITY: RENOVATION AND ADDITIONS
301 EAST CORK ST.
WINCHESTER, VIRGINIA
22601

ARCHITECT:
GDA
Gross & DellOlio Architects plc.
Lisa DellOlio — DellOlio@Gda.com • GDA.com
20 Wigton Drive, Suite 1
Guardstown, WV 26505
304.363.7107
19 East Boscawen Street
Winchester, VA 22601
540.773.1206

Seal

PAINTER-LEWIS, P.L.C.
817 CEDAR CREEK GRADE, SUITE 120
WINCHESTER, VIRGINIA 22601
Telephone: (540) 662–5792
Facsimile: (540) 662–5793
Email: office@painterlewis.com
CONSULTING ENGINEERS

COMMONWEALTH OF VIRGINIA
TIMOTHY G. PAINTER
Lic. No. 018260
PROFESSIONAL ENGINEER

M.E.P. ENGINEERS:
CDi
Comfort Designs Inc.
620 Pennsylvania Avenue
Winchester, VA 22604
540 665–2846

Seal
COMMONWEALTH OF VIRGINIA
M. Howell
MICHAEL F. HOWELL
No.008875
5 AUG 2019
PROFESSIONAL ENGINEER

ISSUE/REVISIONS:

DRAWING TITLE:
PHASE I
BUILDING 2

SHEET TITLE:
MEZZ LIGHTING PLAN

DATE: AUGUST 5, 2019
PROJECT NO.: 1801014
SCALE: AS NOTED
SHEET: E1.2

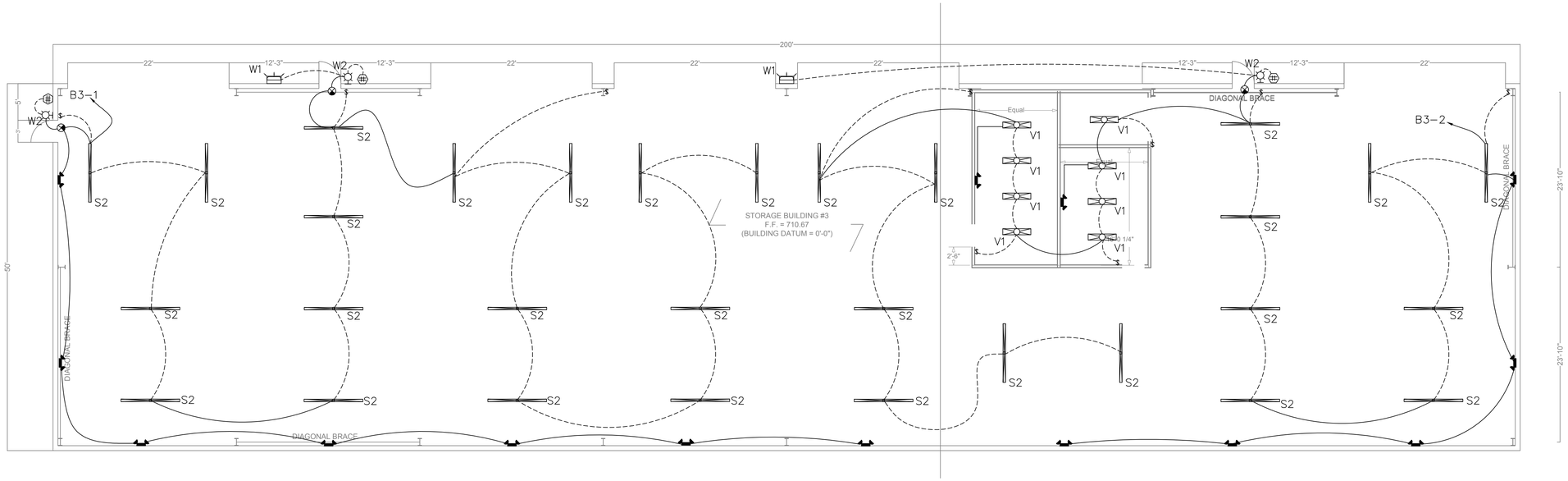

BUILDING #3: LIGHTING PLAN

SCALE: 1/8"=1'-0"

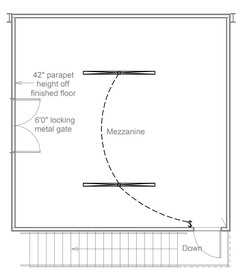

BUILDING #3: MEZZ LIGHTING PLAN

SCALE: 1/8"=1'-0"

LIGHTING SYMBOL LIST	
ALL JUNCTION BOXES AND OUTLETS SHALL HAVE A MECHANICALLY PRINTED PERMANENT LABEL ATTACHED INDICATING WHICH CIRCUIT AND PANEL SERVES THE JUNCTION BOX OR OUTLET.	
SYMBOL	DESCRIPTION
$	WALL SWITCH, 3 DENOTES 3-WAY OPERATION, 4 DENOTES 4-WAY OPERATION, D DENOTES FIXTURE COMPATIBLE DIMMER SWITCH, FAN DENOTES FAN COMPATIBLE SWITCH. ADA MOUNTING HEIGHT. WP DENOTES WEATHER PROOF COVER.
	PHOTOCELL SENSOR
	DASHED LINE REPRESENTS SWITCHED WIRING BETWEEN FIXTURES IN A SWITCHED GROUP. CONTAINS SWITCHED CONDUCTORS AND DIMMING CONTROL WIRES (0-10V) FOR DIMMING CIRCUITS. MAY ALSO CONTAIN UN-SWITCHED CONDUCTORS FOR CIRCUIT CONTINUATION OR EMERGENCY LIGHTING.
	UN-SWITCHED WIRING.
M	DENOTES LIGHT SWITCH FOR MEZZANINE AREA. FIELD COORDINATE LOCATION OF SWITCH PRIOR TO INSTALLATION.

FIXTURE SCHEDULE		
SYMBOL	TYPE	DESCRIPTION/MODEL
	D1	6" LED DOWNLIGHT- HE WILLIAMS- 6DR-TL-L30/835-DIM-UNV
	S1	8' STANDARD STRIP LED FIXTURE - HE WILLIAMS 76-8-L64/835-WG-7614-DRV-UNV
	S2	8' STANDARD STRIP LED FIXTURE - HE WILLIAMS 76-8-L106/835-WG-7614-DRV-UNV
	S3	2X4 RECESSED LED FIXTURE- HE WILLIAMS-LP-24-L50/835-DIM-UNV
	S4	1X4 STANDARD STRIP-HE WILLIAMS- 76-4-L32/835-DRV-UNV
	W2	DECORATIVE LED EMERGENCY LIGHT - HE WILLIAMS - EMER/DECO - WHT - LT - D
		LED EXIT SIGN - HE WILLIAMS - EXIT - R - EM - WHT - SDT - D
		LED EMERGENCY LIGHT - HE WILLIAMS - EMER/LED - WHT - SDT - D
	W1	LED EXTERIOR WALL PACK- LITHONIA- DSXW1LED 10C 350 30K TFTM MVOLT
	V1	FULLY ENCLOSED & GASKETED INDUSTRIAL LED- HE WILLIAMS- 96-4-L40/835-HIAFR-SS LATCH-DRV-UNV

COMcheck Software Version 4.1.0.0

Interior Lighting Compliance Certificate

Section 1: Project Information

Energy Code: **2009 IECC**
Project Title: CITY YARD BLDG. #3
Project Type: New Construction

Construction Site: 301 E. CORK STREET, WINCHESTER, VA 22601
Owner/Agent:
Designer/Contractor:

Section 2: Interior Lighting and Power Calculation

A Area Category	B Floor Area (ft2)	C Allowed Watts / ft2	D Allowed Watts (B x C)
Warehouse	10000	0.8	8000
		Total Allowed Watts =	8000

Section 3: Interior Lighting Fixture Schedule

A Fixture ID : Description / Lamp / Wattage Per Lamp / Ballast	B Lamps/ Fixture	C # of Fixtures	D Fixture Watt.	E (C X D)
Warehouse (10000 sq.ft.)				
LED 1: Other:	1	32	72	2304
LED 2: Other:	1	8	30	240
			Total Proposed Watts =	2544

Section 4: Requirements Checklist

Interior Lighting PASSES: Design 68% better than code.

Lighting Wattage:

❑ 1. Total proposed watts must be less than or equal to total allowed watts.

Allowed Watts	Proposed Watts	Complies
8000	2544	YES

Section 5: Compliance Statement

Compliance Statement: The proposed lighting design represented in this document is consistent with the building plans, specifications and other calculations submitted with this permit application. The proposed lighting system has been designed to meet the 2009 IECC requirements in COM*check* Version 4.1.0.0 and to comply with the mandatory requirements in the Requirements Checklist.

Heather Bowers — Heather Bowers — 7-26-19
Name - Title — Signature — Date

NORTH (Building)

CITY YARDS MAINTENANCE FACILITY: RENOVATION AND ADDITIONS
301 EAST CORK ST, WINCHESTER, VIRGINIA 22601

ARCHITECT:
GDA Architecture Planning Interiors
Greene & DuPont Office Architects pllc
Lisa DuPont Office: RuthCPlatt.com • GDAalt.com
125 Virginian Lane, Gerrardstown, WV 25420 304-931-2127
15 West Boscawen Street, Winchester, VA 22601 540-313-2106

Seal

PAINTER-LEWIS, P.L.C.
817 CEDAR CREEK GRADE, SUITE 120
WINCHESTER, VIRGINIA 22601
Telephone: (540) 662-5792
Facsimile: (540) 662-5793
Email: office@painterlewis.com
CONSULTING ENGINEERS

COMMONWEALTH OF VIRGINIA
TIMOTHY G. PAINTER
Lic. No. 018260
PROFESSIONAL ENGINEER

M.E.P. ENGINEERS:
CDi
Comfort Designs Inc.
620 Pennsylvania Avenue
Winchester, VA 22604
540 665-2846

Seal
COMMONWEALTH OF VIRGINIA
M. Howell
MICHAEL F. HOWELL
No.008875
5 AUG 2019
PROFESSIONAL ENGINEER

ISSUE/REVISIONS:

DRAWING TITLE:
PHASE I
BUILDING #3

SHEET TITLE:
LIGHTING PLAN

DATE: AUGUST 5, 2019
PROJECT NO.: 1801014
SCALE: AS NOTED
SHEET: E1.3

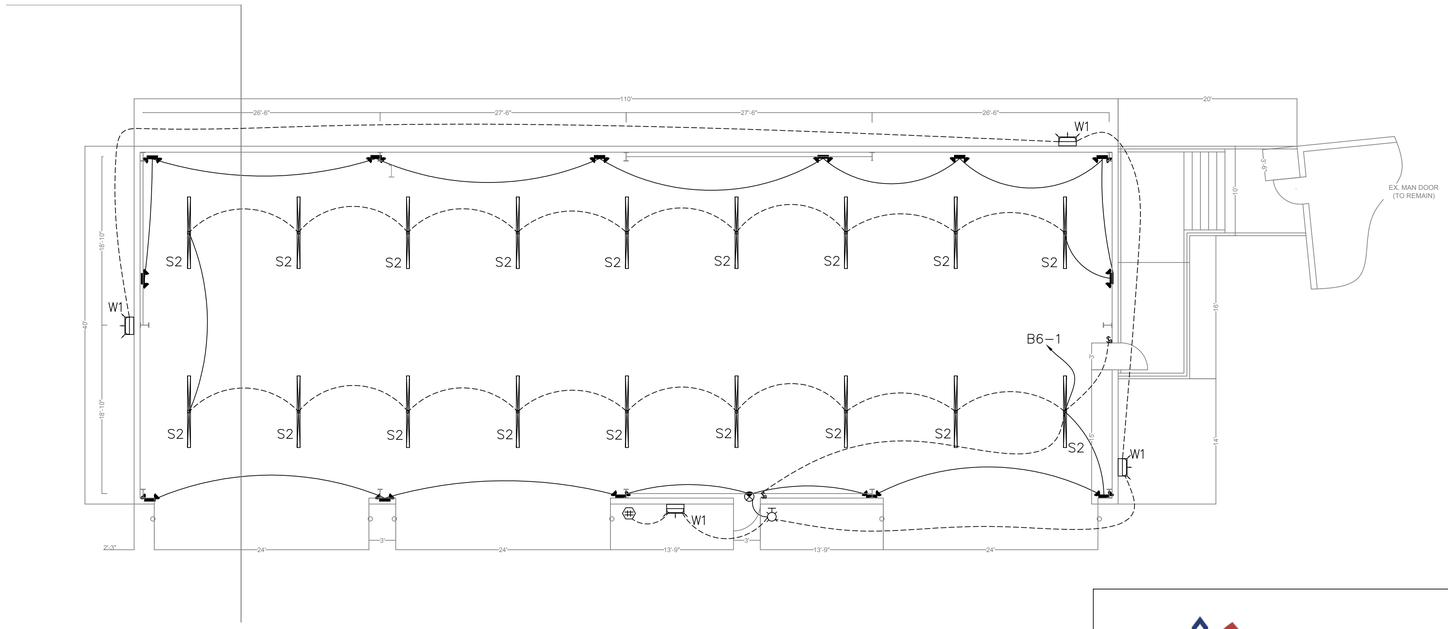

BUILDING #6 LIGHTING PLAN

SCALE: 1/8"=1'-0"

FIXTURE SCHEDULE		
SYMBOL	TYPE	DESCRIPTION/MODEL
○	D1	6" LED DOWNLIGHT– HE WILLIAMS– 6DR–TL–L30/835–DIM–UNV
	S1	8' STANDARD STRIP LED FIXTURE – HE WILLIAMS 76–8–L64/835–WG–7614–DRV–UNV
	S2	8' STANDARD STRIP LED FIXTURE – HE WILLIAMS 76–8–L106/835–WG–7614–DRV–UNV
	S3	2X4 RECESSED LED FIXTURE– HE WILLIAMS–LP–24–L50/835–DIM–UNV
	S4	1X4 STANDARD STRIP–HE WILLIAMS– 76–4–L32/835–DRV–UNV
	W2	DECORATIVE LED EMERGENCY LIGHT – HE WILLIAMS – EMER/DECO – WHT – LT – D
		LED EXIT SIGN – HE WILLIAMS – EXIT – R – EM – WHT – SDT – D
		LED EMERGENCY LIGHT – HE WILLIAMS – EMER/LED – WHT – SDT – D
	W1	LED EXTERIOR WALL PACK– LITHONIA– DSXW1LED 10C 350 30K TFTM MVOLT
	V1	FULLY ENCLOSED & GASKETED INDUSTRIAL LED– HE WILLIAMS– 96–4–L40/835–HIAFR–SS LATCH–DRV–UNV

LIGHTING SYMBOL LIST	
ALL JUNCTION BOXES AND OUTLETS SHALL HAVE A MECHANICALLY PRINTED PERMANENT LABEL ATTACHED INDICATING WHICH CIRCUIT AND PANEL SERVES THE JUNCTION BOX OR OUTLET.	
SYMBOL	DESCRIPTION
$	WALL SWITCH, 3 DENOTES 3–WAY OPERATION, 4 DENOTES 4–WAY OPERATION, D DENOTES FIXTURE COMPATIBLE DIMMER SWITCH, FAN DENOTES FAN COMPATIBLE SWITCH. ADA MOUNTING HEIGHT. WP DENOTES WEATHER PROOF COVER.
	PHOTOCELL SENSOR
	DASHED LINE REPRESENTS SWITCHED WIRING BETWEEN FIXTURES IN A SWITCHED GROUP. CONTAINS SWITCHED CONDUCTORS AND DIMMING CONTROL WIRES (0–10V) FOR DIMMING CIRCUITS. MAY ALSO CONTAIN UN–SWITCHED CONDUCTORS FOR CIRCUIT CONTINUATION OR EMERGENCY LIGHTING.
	UN–SWITCHED WIRING.
M	DENOTES LIGHT SWITCH FOR MEZZANINE AREA. FIELD COORDINATE LOCATION OF SWITCH PRIOR TO INSTALLATION.

COMcheck Software Version 4.1.1.0

Interior Lighting Compliance Certificate

Section 1: Project Information

Energy Code: **2009 IECC**
Project Title: City Yards Building 2
Project Type: New Construction

Construction Site:
15 N. Cameron Street
Winchester, VA 22601

Owner/Agent:

Designer/Contractor:

Section 2: Interior Lighting and Power Calculation

A Area Category	B Floor Area (ft2)	C Allowed Watts / ft2	D Allowed Watts (B x C)
Warehouse	4400	0.8	3520
		Total Allowed Watts =	3520

Section 3: Interior Lighting Fixture Schedule

A Fixture ID : Description / Lamp / Wattage Per Lamp / Ballast	B Lamps/ Fixture	C # of Fixtures	D Fixture Watt.	E (C X D)
Warehouse (4400 sq.ft.)				
LED 1: Other:	1	18	72	1296
			Total Proposed Watts =	1296

Section 4: Requirements Checklist

Interior Lighting PASSES: Design 63% better than code.

Lighting Wattage:

☐ 1. Total proposed watts must be less than or equal to total allowed watts.

Allowed Watts	Proposed Watts	Complies
3520	1296	YES

Section 5: Compliance Statement

Compliance Statement: The proposed lighting design represented in this document is consistent with the building plans, specifications and other calculations submitted with this permit application. The proposed lighting system has been designed to meet the 2009 IECC requirements in COM*check* Version 4.1.1.0 and to comply with the mandatory requirements in the Requirements Checklist.

Austin L. Catlett — Name - Title
Austin L. Catlett — Signature
7/23/19 — Date

NORTH (Building)

CITY YARDS MAINTENANCE FACILITY: RENOVATION AND ADDITIONS
301 EAST CORK ST.
WINCHESTER, VIRGINIA
22601

ARCHITECT:
GDA

Seal

PAINTER-LEWIS, P.L.C.
817 CEDAR CREEK GRADE, SUITE 120
WINCHESTER, VIRGINIA 22601
Telephone: (540) 662–5792
Facsimile: (540) 662–5793
Email: office@painterlewis.com
CONSULTING ENGINEERS

COMMONWEALTH OF VIRGINIA
TIMOTHY G. PAINTER
Lic. No. 018260
PROFESSIONAL ENGINEER

M.E.P. ENGINEERS:
CDi
Comfort Designs Inc.
620 Pennsylvania Avenue
Winchester, VA 22604
540 665–2846

Seal
COMMONWEALTH OF VIRGINIA
M. Howell
MICHAEL F. HOWELL
No. 008875
5 AUG 2019
PROFESSIONAL ENGINEER

ISSUE/REVISIONS:

DRAWING TITLE:
PHASE I
BUILDING #6

SHEET TITLE:
LIGHTING PLAN

DATE: AUGUST 5, 2019
PROJECT NO.: 1801014
SCALE: AS NOTED
SHEET:
E1.5

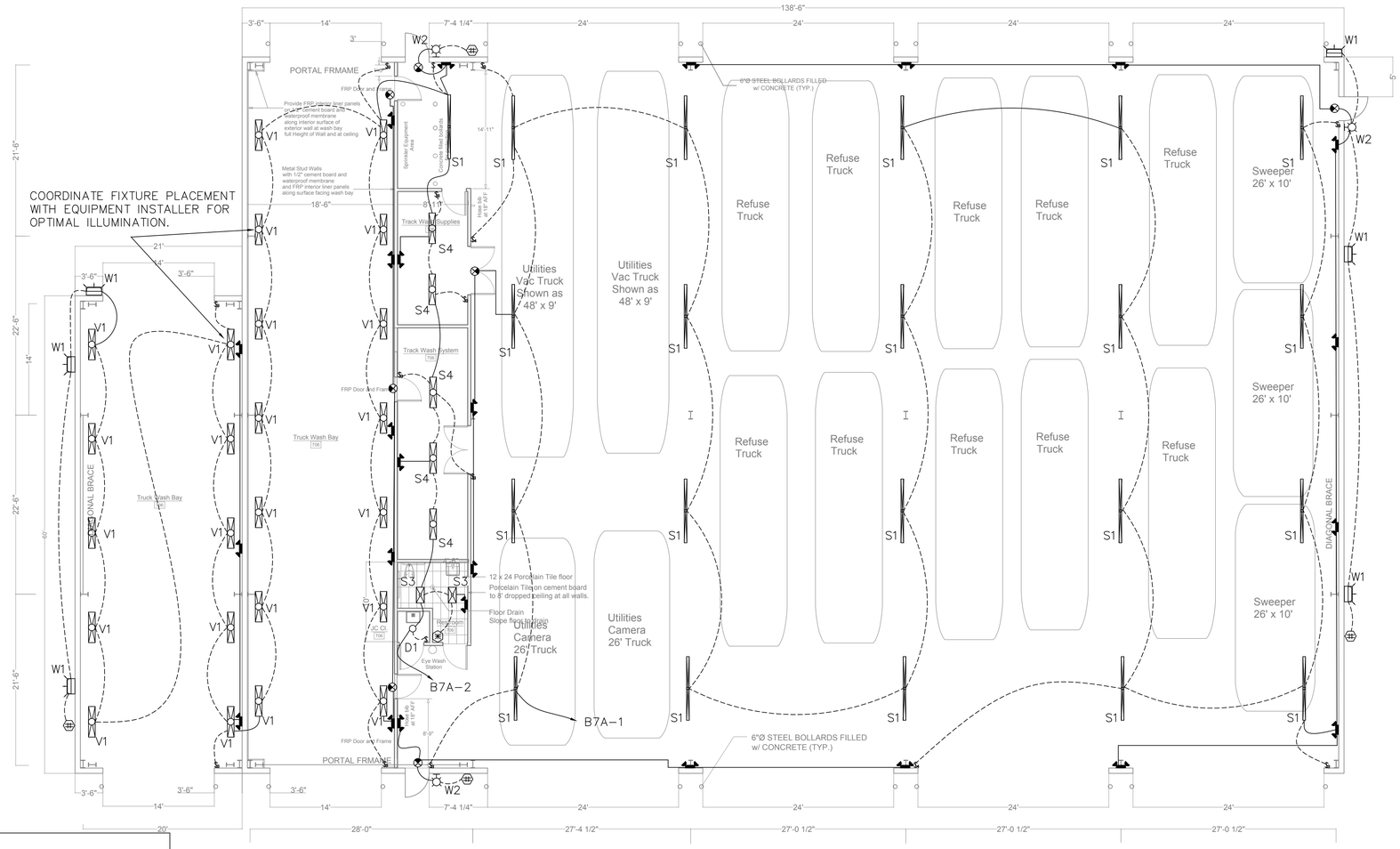

BUILDING #7 LIGHTING PLAN

SCALE: 1/8"=1'-0"

FIXTURE SCHEDULE		
SYMBOL	TYPE	DESCRIPTION/MODEL
○	D1	6" LED DOWNLIGHT– HE WILLIAMS– 6DR–TL–L30/835–DIM–UNV
	S1	8' STANDARD STRIP LED FIXTURE – HE WILLIAMS 76–8–L64/835–WG–7614–DRV–UNV
	S2	8' STANDARD STRIP LED FIXTURE – HE WILLIAMS 76–8–L106/835–WG–7614–DRV–UNV
	S3	2X4 RECESSED LED FIXTURE– HE WILLIAMS–LP–24–L50/835–DIM–UNV
	S4	1X4 STANDARD STRIP–HE WILLIAMS– 76–4–L32/835–DRV–UNV
	W2	DECORATIVE LED EMERGENCY LIGHT – HE WILLIAMS – EMER/DECO – WHT – LT – D
		LED EXIT SIGN – HE WILLIAMS – EXIT – R – EM – WHT – SDT – D
		LED EMERGENCY LIGHT – HE WILLIAMS – EMER/LED – WHT – SDT – D
	W1	LED EXTERIOR WALL PACK– LITHONIA– DSXW1LED 10C 350 30K TFTM MVOLT
	V1	FULLY ENCLOSED & GASKETED INDUSTRIAL LED– HE WILLIAMS– 96–4–L40/835–HIAFR–SS LATCH–DRV–UNV

LIGHTING SYMBOL LIST	
ALL JUNCTION BOXES AND OUTLETS SHALL HAVE A MECHANICALLY PRINTED PERMANENT LABEL ATTACHED INDICATING WHICH CIRCUIT AND PANEL SERVES THE JUNCTION BOX OR OUTLET.	
SYMBOL	DESCRIPTION
$	WALL SWITCH, 3 DENOTES 3–WAY OPERATION, 4 DENOTES 4–WAY OPERATION, D DENOTES FIXTURE COMPATIBLE DIMMER SWITCH, FAN DENOTES FAN COMPATIBLE SWITCH. ADA MOUNTING HEIGHT. WP DENOTES WEATHER PROOF COVER.
	PHOTOCELL SENSOR
	DASHED LINE REPRESENTS SWITCHED WIRING BETWEEN FIXTURES IN A SWITCHED GROUP. CONTAINS SWITCHED CONDUCTORS AND DIMMING CONTROL WIRES (0–10V) FOR DIMMING CIRCUITS. MAY ALSO CONTAIN UN–SWITCHED CONDUCTORS FOR CIRCUIT CONTINUATION OR EMERGENCY LIGHTING.
	UN–SWITCHED WIRING.
M	DENOTES LIGHT SWITCH FOR MEZZANINE AREA. FIELD COORDINATE LOCATION OF SWITCH PRIOR TO INSTALLATION.

COMcheck Software Version 4.1.0.0

Interior Lighting Compliance Certificate

Section 1: Project Information

Energy Code: **2009 IECC**
Project Title: CITY YARDS BLDG #7
Project Type: New Construction

Construction Site: 301 E. CORK STREET WINCHESTER, VA 22601
Owner/Agent:
Designer/Contractor:

Section 2: Interior Lighting and Power Calculation

A Area Category	B Floor Area (ft2)	C Allowed Watts / ft2	D Allowed Watts (B x C)
Warehouse	13100	0.8	10480
		Total Allowed Watts =	10480

Section 3: Interior Lighting Fixture Schedule

A Fixture ID : Description / Lamp / Wattage Per Lamp / Ballast	B Lamps/ Fixture	C # of Fixtures	D Fixture Watt.	E (C X D)
Warehouse (13100 sq.ft.)				
LED 1: Other:	1	21	72	1512
LED 2: Other:	1	1	26.9	26.9
LED 3: Other:	1	2	48.1	96.2
LED 4: Other:	1	24	30	720
LED 5: Other:	1	5	23	115
		Total Proposed Watts =		2470

Section 4: Requirements Checklist

Interior Lighting PASSES: Design 32% better than code

Lighting Wattage:

☐ 1. Total proposed watts must be less than or equal to total allowed watts.

Allowed Watts	Proposed Watts	Complies
10480	2470	YES

Section 5: Compliance Statement

Compliance Statement: The proposed lighting design represented in this document is consistent with the building plans, specifications and other calculations submitted with this permit application. The proposed lighting system has been designed to meet the 2009 IECC requirements in COMcheck Version 4.1.0.0 and to comply with the mandatory requirements in the Requirements Checklist.

Heather Bowers — Heather Bowers — 8-13-19
Name - Title — Signature — Date

NORTH (Building)

CITY YARDS MAINTENANCE FACILITY: RENOVATION AND ADDITIONS
301 EAST CORK ST.
WINCHESTER, VIRGINIA 22601

ARCHITECT:
GDA
Greene & Dull Office Architects, pllc
Architecture Planning Interiors Landscape
Est. 1970's

Seal

PAINTER-LEWIS, P.L.C.
817 CEDAR CREEK GRADE, SUITE 120
WINCHESTER, VIRGINIA 22601
Telephone: (540) 662–5792
Facsimile: (540) 662–5793
Email: office@painterlewis.com
CONSULTING ENGINEERS

COMMONWEALTH OF VIRGINIA
TIMOTHY G. PAINTER
Lic. No. 018260
PROFESSIONAL ENGINEER

M.E.P. ENGINEERS:
CDi
Comfort Designs Inc.
620 Pennsylvania Avenue
Winchester, VA 22604
540 665–2846

Seal
COMMONWEALTH OF VIRGINIA
M Howell
MICHAEL F. HOWELL
No.008875
5 AUG 2019
PROFESSIONAL ENGINEER

ISSUE/REVISIONS:

DRAWING TITLE:
PHASE II
BUILDING #7

SHEET TITLE:
LIGHTING PLAN

DATE: AUGUST 5, 2019
PROJECT NO.: 1801014
SCALE: AS NOTED
SHEET: E1.6

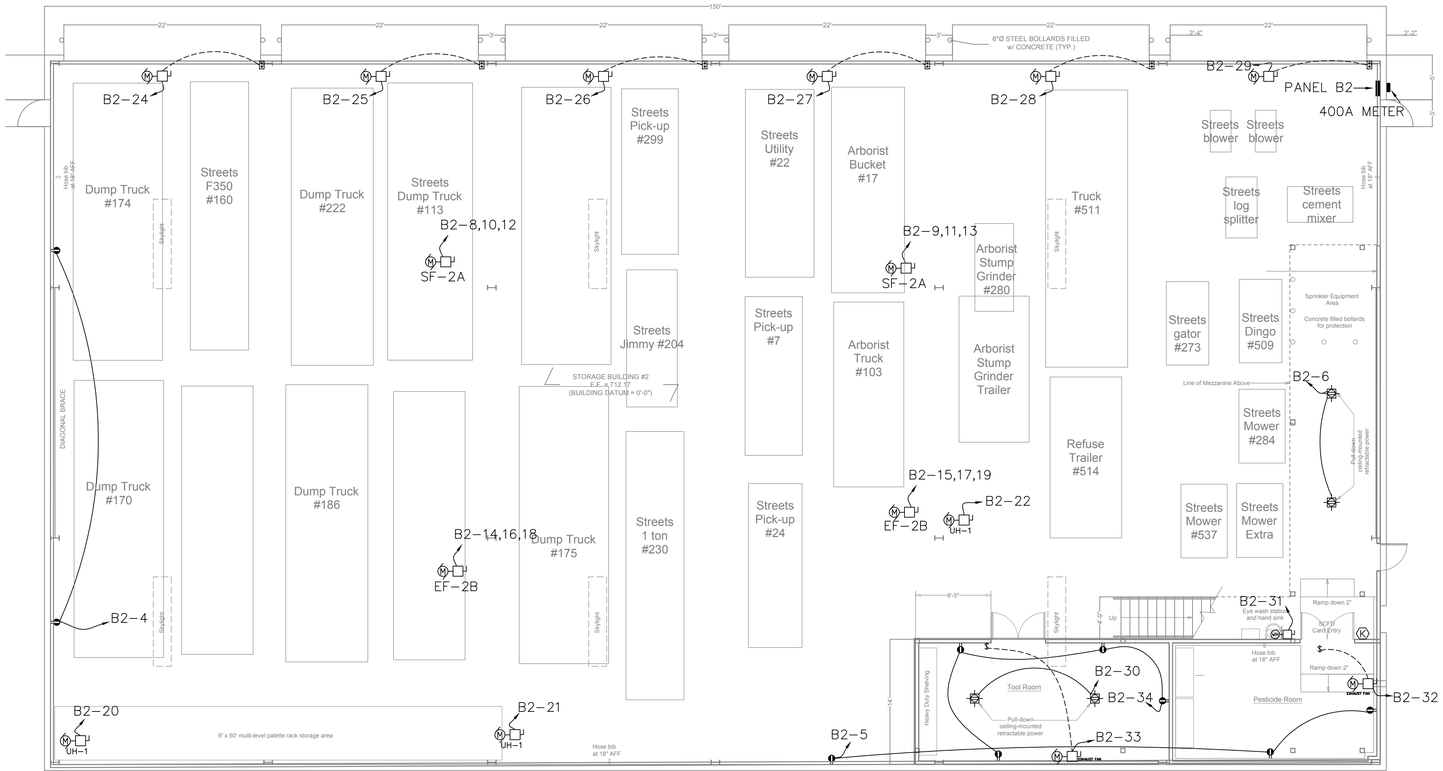

BUILDING #2: POWER PLAN

SCALE: 1/8"=1'-0"

POWER SYMBOL LIST	
ALL JUNCTION BOXES AND OUTLETS SHALL HAVE A MECHANICALLY PRINTED PERMANENT LABEL ATTACHED INDICATING WHICH CIRCUIT AND PANEL SERVES THE JUNCTION BOX OR OUTLET. PRINTING MINIMUM HEIGHT 3/16"	
OUTLET AND SWITCH COLOR SHALL BE AS DIRECTED BY THE ARCHITECT. OUTLET AND SWITCH PLATES SHALL BE STAINLESS STEEL.	
SYMBOL	DESCRIPTION
	DUPLEX RECEPTACLE
	GFCI RECEPTACLE. WP DENOTES WEATHERPROOF COVER. COORDINATE MOUNTING HEIGHT AT COUNTERS AND CASEWORK
	CEILING MOUNTED RECEPTACLE.
K	ELECTRONIC LOCK SET (CARD READER/PUSH BUTTON) SYSTEM. JUNCTION BOX LOCATED IN CEILING WITH PULL THRU WIRE TO SINGLE GANG BOX IN WALL. COORDINATE WITH OWNER FOR MOUNTING HEIGHT. (FOR EQUIPMENT INSTALLATION),
	CEILING MOUNTED JUNCTION BOX
M	FUSED DISCONNECT SWITCH AND MOTOR CONNECTION. PROVIDE FUSES PER NAMEPLATE DATA.
W	NFSS DISCONNECT AND WATER HEATER CONNECTION.
SF	SUPPLY FAN
EF	EXHAUST FAN
UH-1	UNIT HEATER
220	OUTLET CONNECTIONS FOR WELDER, AIR COMPRESSOR AND PLASMA CUTTER. FIELD COORDINATE EXACT LOCATIONS OF OUTLETS PRIOR TO INSTALLATION.
	PUSH BUTTON CONTROL FOR DOOR OPENERS

B2 — 400 A FRAME 3 PH 4 W 208Y/120 VOLT — MAIN CB PANELBOARD — AIR: 10KA

Ckt	DESCRIPTION	CB	POLE	PH	NEU	EGC	COND	VA	PH	VA	COND	EGC	NEU	PH	POLE	CB	DESCRIPTION	Ckt
1	BAY LIGHTS	15	1	14	14	14	MC	1332	A	1075	MC	14	14	14	1	15	BAY LIGHTS	2
3	MEZZ/ RM LTS	15	1	14	14	14	MC	657	B	360	MC	12	12	12	1	20	BAY REC R	4
5	BCK BAY REC	20	1	12	12	12	MC	540	C	540	MC	12	12	12	1	20	BAY CL REC	6
7	MEZZ REC	20	1	12	12	12	MC	540	A	3036	1	10		8	3	50	SF-2A (1)	8
9	SF-2A (2)	50	3	8		10	1	3036	B	3036				8			"	10
11	"			8				3036	C	3036				8			"	12
13	"			8				3036	A	5796	1-1/4	8		3	3	90	EF-2B (1)	14
15	EF-2B (2)	90	3	3		8	1-1/4	5796	B	5796				3			"	16
17	"			3				5796	C	5796				3			"	18
19	"			3				5796	A	858	MC	12	12	12	1	20	UH-1 (1)	20
21	UH-1 (2)	20	1	12	12	12	MC	858	B	858	MC	12	12	12	1	20	UH-1 (3)	22
23	UH-1 (4)	20	1	12	12	12	MC	858	C	1920	MC	10	10	10	1	30	DOOR OPENER (1)	24
25	DOOR OPENER (2)	30	1	10	10	10	MC	1920	A	1920	MC	10	10	10	1	30	DOOR OPENER (3)	26
27	DOOR OPENER (4)	30	1	10	10	10	MC	1920	B	1920	MC	10	10	10	1	30	DOOR OPENER (5)	28
29	DOOR OPENER (6)	30	1	10	10	10	MC	1920	C	360	MC	12	12	12	1	20	TOOL RM CL REC	30
31	HWH	20	1	12	12	12	MC	600	A	696	MC	14	14	14	1	15	EXHAUST FAN	32
33	EXHAUST FAN	15	1	14	14	14	MC	696	B	720	MC	12	12	12	1	20	TOOL RM REC	34
35	SPARE								C								SPARE	36
37	SPARE								A								SPARE	38
39	SPARE								B								SPARE	40
41	SPARE								C								SPARE	42

CONNECTED VA	26,605	A	222	CONNECTED AMPS	WIRES BASED ON 75° C RATED CU
CONNECTED VA	25,653	B	214	CONNECTED AMPS	WITH 75° C RATED TERMINALS
CONNECTED VA	23,802	C	198	CONNECTED AMPS	
TOTAL CONNECTED VA	76,060		211	AVERAGE CONNECTED AMPS	
DEMAND VA	79,283		220	NEC DEMAND AMPS	

\\MYCLOUDEX2ULTRA\Public\DATA\Projects\cdi19\E1946 City Yards Storage Buildngs\elect\PANELS\[BLDG 2 PANEL.xlsx]INPUT 8/13/2019 9:27

NORTH (Building)

CITY YARDS MAINTENANCE FACILITY: RENOVATION AND ADDITIONS
301 EAST CORK ST.
WINCHESTER, VIRGINIA 22601

ARCHITECT:
GDA

Seal

PAINTER-LEWIS, P.L.C.
817 CEDAR CREEK GRADE, SUITE 120
WINCHESTER, VIRGINIA 22601
Telephone: (540) 662-5792
Facsimile: (540) 662-5793
Email: office@painterlewis.com
CDi CONSULTING ENGINEERS

COMMONWEALTH OF VIRGINIA
TIMOTHY G. PAINTER
Lic. No. 018260
PROFESSIONAL ENGINEER

M.E.P. ENGINEERS:
CDi
Comfort Designs Inc.
620 Pennsylvania Avenue
Winchester, VA 22604
540 665-2846

Seal

COMMONWEALTH OF VIRGINIA
M Howell
MICHAEL F. HOWELL
No.008875
5 AUG 2019
PROFESSIONAL ENGINEER

ISSUE/REVISIONS:

DRAWING TITLE:
PHASE I
BUILDING #2

SHEET TITLE:
POWER PLAN

DATE: AUGUST 5, 2019
PROJECT NO.: 1801014
SCALE: AS NOTED
SHEET: E2.1

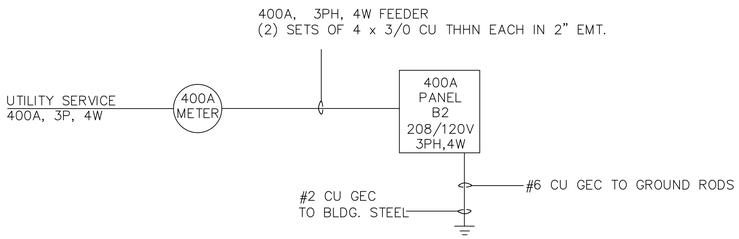

BUILDING #2: ONE LINE DIAGRAM

SCALE: N.T.S.

POWER SYMBOL LIST	
ALL JUNCTION BOXES AND OUTLETS SHALL HAVE A MECHANICALLY PRINTED PERMANENT LABEL ATTACHED INDICATING WHICH CIRCUIT AND PANEL SERVES THE JUNCTION BOX OR OUTLET. PRINTING MINIMUM HEIGHT 3/16"	
OUTLET AND SWITCH COLOR SHALL BE AS DIRECTED BY THE ARCHITECT. OUTLET AND SWITCH PLATES SHALL BE STAINLESS STEEL.	
SYMBOL	DESCRIPTION
	DUPLEX RECEPTACLE
	GFCI RECEPTACLE. WP DENOTES WEATHERPROOF COVER. COORDINATE MOUNTING HEIGHT AT COUNTERS AND CASEWORK
	CEILING MOUNTED RECEPTACLE.
K	ELECTRONIC LOCK SET (CARD READER/PUSH BUTTON) SYSTEM. JUNCTION BOX LOCATED IN CEILING WITH PULL THRU WIRE TO SINGLE GANG BOX IN WALL. COORDINATE WITH OWNER FOR MOUNTING HEIGHT. (FOR EQUIPMENT INSTALLATION),
	CEILING MOUNTED JUNCTION BOX
M	FUSED DISCONNECT SWITCH AND MOTOR CONNECTION. PROVIDE FUSES PER NAMEPLATE DATA.
NW	NFSS DISCONNECT AND WATER HEATER CONNECTION.
SF	SUPPLY FAN
EF	EXHAUST FAN
UH-1	UNIT HEATER
220	OUTLET CONNECTIONS FOR WELDER, AIR COMPRESSOR AND PLASMA CUTTER. FIELD COORDINATE EXACT LOCATIONS OF OUTLETS PRIOR TO INSTALLATION.
	PUSH BUTTON CONTROL FOR DOOR OPENERS

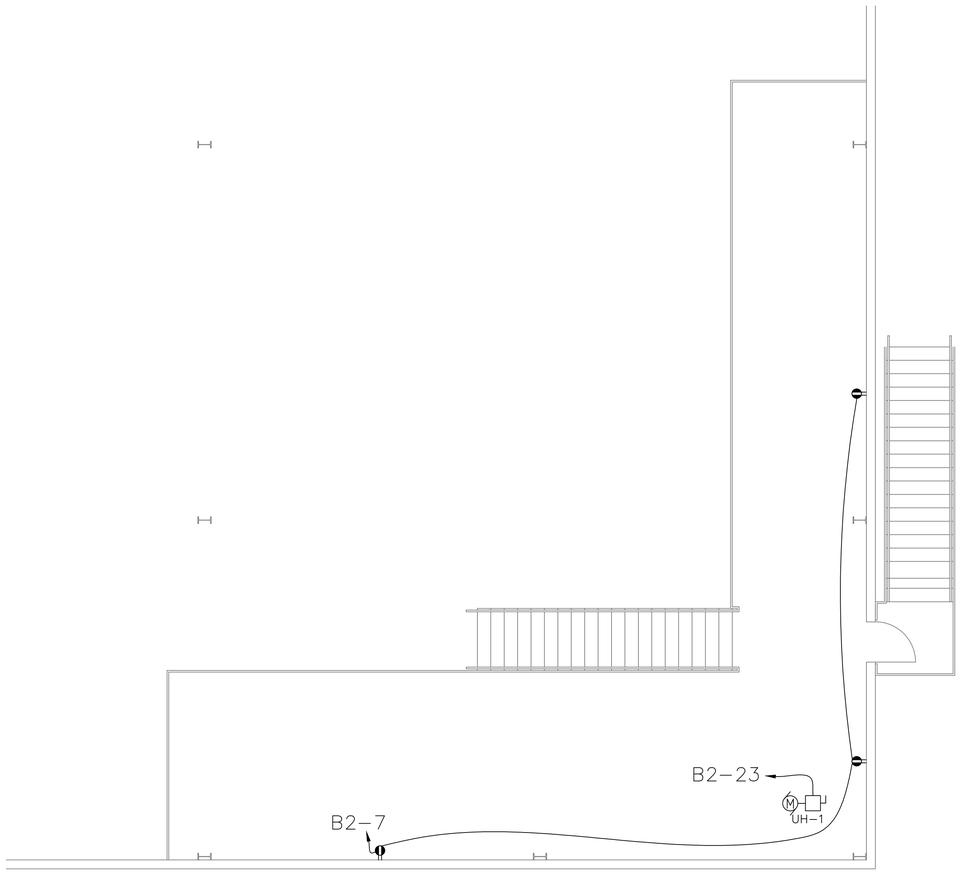

BUILDING #2: MEZZ POWER PLAN

SCALE: $\frac{3}{16}$"=1'-0"

NORTH (Building)

CITY YARDS MAINTENANCE FACILITY: RENOVATION AND ADDITIONS
301 EAST CORK ST.
WINCHESTER, VIRGINIA 22601

ARCHITECT:
GDA

PAINTER-LEWIS, P.L.C.
817 CEDAR CREEK GRADE, SUITE 120
WINCHESTER, VIRGINIA 22601
Telephone: (540) 662-5792
Facsimile: (540) 662-5793
Email: office@painterlewis.com
CONSULTING ENGINEERS

COMMONWEALTH OF VIRGINIA
TIMOTHY G. PAINTER
Lic. No. 018260
PROFESSIONAL ENGINEER

M.E.P. ENGINEERS:
CDi
Comfort Designs Inc.
620 Pennsylvania Avenue
Winchester, VA 22604
540 665-2846

Seal
COMMONWEALTH OF VIRGINIA
M. Howell
MICHAEL F. HOWELL
No.008875
5 AUG 2019
PROFESSIONAL ENGINEER

ISSUE/REVISIONS:

DRAWING TITLE:
PHASE I
BUILDING #2

SHEET TITLE:
MEZZ POWER PLAN

DATE: AUGUST 5, 2019
PROJECT NO.: 1801014
SCALE: AS NOTED
SHEET: E2.2

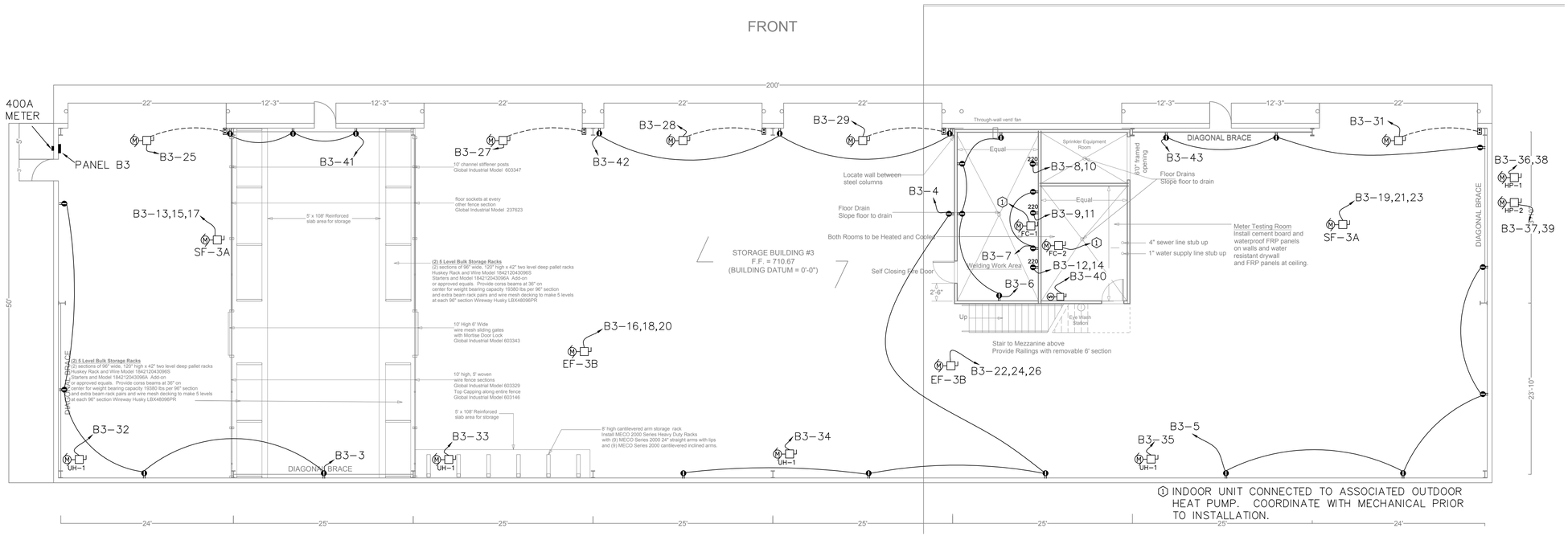

① INDOOR UNIT CONNECTED TO ASSOCIATED OUTDOOR HEAT PUMP. COORDINATE WITH MECHANICAL PRIOR TO INSTALLATION.

BUILDING #3: POWER PLAN

SCALE: 1/8"=1'-0"

POWER SYMBOL LIST	
ALL JUNCTION BOXES AND OUTLETS SHALL HAVE A MECHANICALLY PRINTED PERMANENT LABEL ATTACHED INDICATING WHICH CIRCUIT AND PANEL SERVES THE JUNCTION BOX OR OUTLET. PRINTING MINIMUM HEIGHT 3/16"	
OUTLET AND SWITCH COLOR SHALL BE AS DIRECTED BY THE ARCHITECT. OUTLET AND SWITCH PLATES SHALL BE STAINLESS STEEL.	
SYMBOL	DESCRIPTION
	DUPLEX RECEPTACLE
	GFCI RECEPTACLE. WP DENOTES WEATHERPROOF COVER. COORDINATE MOUNTING HEIGHT AT COUNTERS AND CASEWORK
	CEILING MOUNTED RECEPTACLE.
K	ELECTRONIC LOCK SET (CARD READER/PUSH BUTTON) SYSTEM. JUNCTION BOX LOCATED IN CEILING WITH PULL THRU WIRE TO SINGLE GANG BOX IN WALL. COORDINATE WITH OWNER FOR MOUNTING HEIGHT. (FOR EQUIPMENT INSTALLATION),
	CEILING MOUNTED JUNCTION BOX
M	FUSED DISCONNECT SWITCH AND MOTOR CONNECTION. PROVIDE FUSES PER NAMEPLATE DATA.
W	NFSS DISCONNECT AND WATER HEATER CONNECTION.
SF	SUPPLY FAN
EF	EXHAUST FAN
UH-1	UNIT HEATER
220	OUTLET CONNECTIONS FOR WELDER, AIR COMPRESSOR AND PLASMA CUTTER. FIELD COORDINATE EXACT LOCATIONS OF OUTLETS PRIOR TO INSTALLATION.
	PUSH BUTTON CONTROL FOR DOOR OPENERS

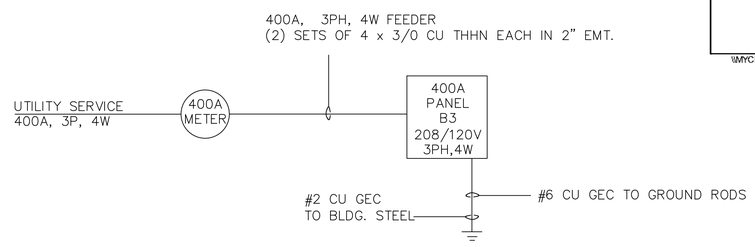

BUILDING #3: ONE LINE DIAGRAM

SCALE: N.T.S.

B3 — 400 A FRAME 3 PH 4 W 208Y/120 VOLT — MAIN CB PANELBOARD — AIR: 10KA

Ckt	DESCRIPTION	CB	POLE	PH	NEU	EGC	COND	VA	PH	VA	COND	EGC	NEU	PH	POLE	CB	DESCRIPTION	Ckt
1	BAY LIGHTS L	15	1	14	14	14	MC	1166	A	1406	MC	14	14	14	1	15	BAY LIGHTS R	2
3	BAY REC L	20	1	12	12	12	MC	720	B	720	MC	12	12	12	1	20	BAY REC M	4
5	BAY REC R	20	1	12	12	12	MC	720	C	720	MC	12	12	12	1	20	SHOP REC	6
7	SHOP 110 REC'S	20	1	12	12	12	MC	360	A	828	MC	12		12	2	20	AIR COMPRESSOR	8
9	WELDER	50	2	8		10	3/4	4500	B	828				12			"	10
11	"			8				4500	C	4500	3/4	10		8	2	50	PLASMA CUTTER	12
13	SF-3A (1)	35	3	8		10	3/4	2100	A	4500				8			"	14
15	"			8				2100	B	3036	3/4	10		8	3	50	EF-3B (1)	16
17	"			8				2100	C	3036				8			"	18
19	SF-3A (2)	35	3	8		10	3/4	2100	A	3036				8			"	20
21	"			8				2100	B	3036	3/4	10		8	3	50	EF-3B (2)	22
23	"			8				2100	C	3036				8			"	24
25	DOOR OPENER (1)	30	1	10	10	10	MC	1920	A	3036				8			"	26
27	DOOR OPENER (2)	30	1	10	10	10	MC	1920	B	3036	MC	10	10	10	1	30	DOOR OPENER (3)	28
29	DOOR OPENER (4)	30	1	10	10	10	MC	1920	C								SPARE	30
31	DOOR OPENER (5)	30	1	10	10	10	MC	1920	A	858	MC	12	12	12	1	20	UH-1 (1)	32
33	UH-1 (2)	20	1	12	12	12	MC	858	B	858	MC	12	12	12	1	20	UH-1 (3)	34
35	UH-1 (4)	20	1	12	12	12	MC	858	C	2052	MC	12		12	2	20	HP-1	36
37	HP-2	20	2	12		12	MC	2052	A	2052				12			"	38
39	"			12				2052	B	696	MC	14	14	14	1	15	HWH	40
41	BAY REC	20	1	12	12	12	MC	540	C	540	MC	12	12	12	1	20	BAY REC	42
43	BAY REC	20	1	12	12	12	MC	540	A								SPARE	44
45	SPARE								B								SPARE	46
47	SPARE								C								SPARE	48
49	SPARE								A								SPARE	50
51	SPARE								B								SPARE	52
53	SPARE								C								SPARE	54

CONNECTED VA	27,874	A	232	CONNECTED AMPS
CONNECTED VA	26,460	B	221	CONNECTED AMPS
CONNECTED VA	26,622	C	222	CONNECTED AMPS
TOTAL CONNECTED VA	80,956		225	AVERAGE CONNECTED AMPS
DEMAND VA	83,390		231	NEC DEMAND AMPS

WIRES BASED ON 75° C RATED CU WITH 75° C RATED TERMINALS

\\MYCLOUDEX2ULTRA\Public\DATA\Projects\cdi19\E1946 City Yards Storage Buildngs\elec\PANELS\[BLDG 3 PANEL.xlsx]INPUT 8/13/2019 9:40

NORTH (Building)

CITY YARDS MAINTENANCE FACILITY: RENOVATION AND ADDITIONS
301 EAST CORK ST.
WINCHESTER, VIRGINIA 22601

ARCHITECT:
GDA
Architecture Planning Interiors Landscape
Grube & Duff Olin Architects plc.
Lisa Duff Olin RuFF@Duff.com • GDAplc.com
201 Higgins Lane Charlottesville, VA 22903 434.293.1122
10 West Boscawen Street Winchester, VA 22601 540.723.1206

Seal

PAINTER-LEWIS, P.L.C.
817 CEDAR CREEK GRADE, SUITE 120
WINCHESTER, VIRGINIA 22601
Telephone: (540) 662-5792
Facsimile: (540) 662-5793
Email: office@painterlewis.com
CONSULTING ENGINEERS

COMMONWEALTH OF VIRGINIA
TIMOTHY G. PAINTER
Lic. No. 018260
PROFESSIONAL ENGINEER

M.E.P. ENGINEERS:
CDi
Comfort Designs Inc.
620 Pennsylvania Avenue
Winchester, VA 22604
540 665-2846

Seal
COMMONWEALTH OF VIRGINIA
M Howell
MICHAEL F. HOWELL
No.008875
5 AUG 2019
PROFESSIONAL ENGINEER

ISSUE/REVISIONS:

DRAWING TITLE:
PHASE I
BUILDING #3

SHEET TITLE:
POWER PLAN

DATE: AUGUST 5, 2019
PROJECT NO.: 1801014
SCALE: AS NOTED
SHEET:
E2.3

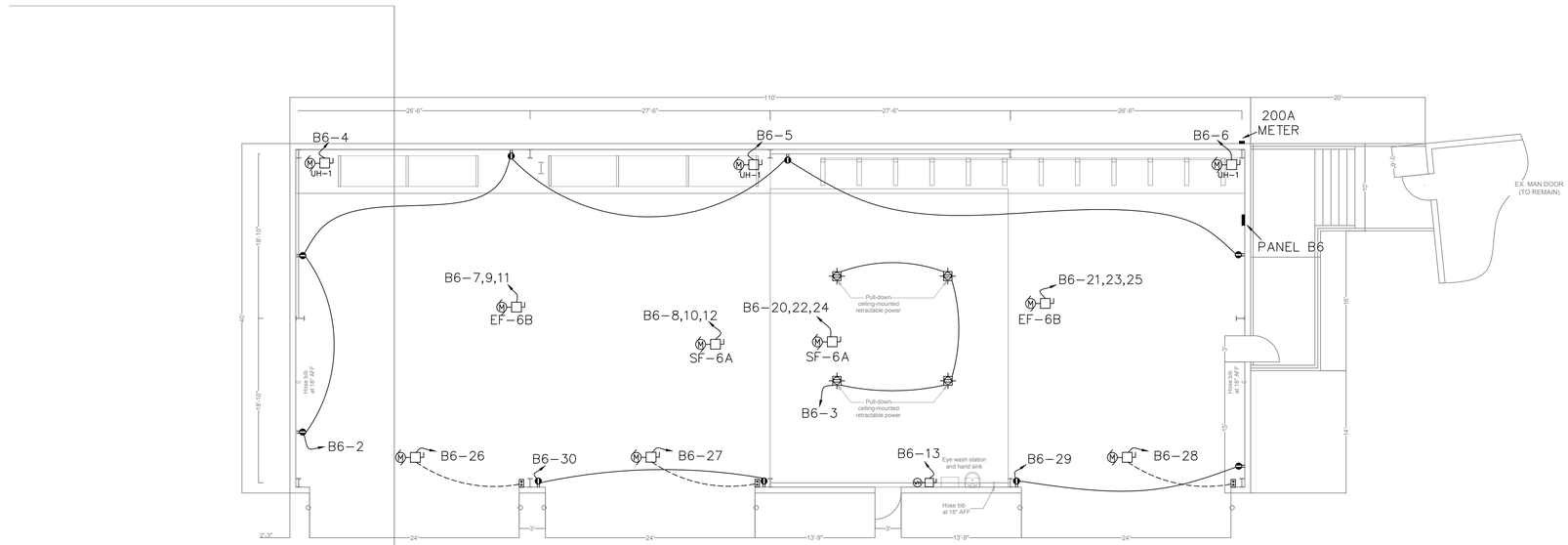

BUILDING #6 POWER PLAN

SCALE: 1/8"=1'-0"

POWER SYMBOL LIST	
ALL JUNCTION BOXES AND OUTLETS SHALL HAVE A MECHANICALLY PRINTED PERMANENT LABEL ATTACHED INDICATING WHICH CIRCUIT AND PANEL SERVES THE JUNCTION BOX OR OUTLET. PRINTING MINIMUM HEIGHT 3/16"	
OUTLET AND SWITCH COLOR SHALL BE AS DIRECTED BY THE ARCHITECT. OUTLET AND SWITCH PLATES SHALL BE STAINLESS STEEL.	
SYMBOL	DESCRIPTION
	DUPLEX RECEPTACLE
	GFCI RECEPTACLE. WP DENOTES WEATHERPROOF COVER. COORDINATE MOUNTING HEIGHT AT COUNTERS AND CASEWORK
	CEILING MOUNTED RECEPTACLE.
K	ELECTRONIC LOCK SET (CARD READER/PUSH BUTTON) SYSTEM. JUNCTION BOX LOCATED IN CEILING WITH PULL THRU WIRE TO SINGLE GANG BOX IN WALL. COORDINATE WITH OWNER FOR MOUNTING HEIGHT. (FOR EQUIPMENT INSTALLATION),
	CEILING MOUNTED JUNCTION BOX
M	FUSED DISCONNECT SWITCH AND MOTOR CONNECTION. PROVIDE FUSES PER NAMEPLATE DATA.
W	NFSS DISCONNECT AND WATER HEATER CONNECTION.
SF	SUPPLY FAN
EF	EXHAUST FAN
UH-1	UNIT HEATER
220	OUTLET CONNECTIONS FOR WELDER, AIR COMPRESSOR AND PLASMA CUTTER. FIELD COORDINATE EXACT LOCATIONS OF OUTLETS PRIOR TO INSTALLATION.
	PUSH BUTTON CONTROL FOR DOOR OPENERS

B6 — 200 A FRAME 3 PH 4 W 208Y/120 VOLT — MAIN CB PANELBOARD — AIR: 10KA

Ckt	DESCRIPTION	CB	POLE	PH	NEU	EGC	COND	VA	PH	VA	COND	EGC	NEU	PH	POLE	CB	DESCRIPTION	Ckt
1	BLDG 6 LGT	15	1	14	14	14	MC	1296	A	900	MC	12	12	12	1	20	BLDG 6 WALL REC	2
3	DROP CORDS	20	1	12	12	12	MC	720	B	858	MC	12	12	12	1	20	UH-1 (1)	4
5	UH-1 (2)	20	1	12	12	12	MC	858	C	858	MC	12	12	12	1	20	UH-1 (3)	6
7	EF-6B (1)	35	3	8		10	3/4	2100	A	2100	3/4	10		8	3	35	SF-6A (1)	8
9	"			8				2100	B	2100				8			"	10
11	"			8				2100	C	2100				8			"	12
13	HWH	15	1	14	14	14	MC	696	A								SPARE	14
15	SPARE								B	720	MC	14	14	14	1	15	BILDG 5 LGT	16
17	BILDG 5A LGT	15	1	14	14	14	MC	720	C	1260	MC	12	12	12	1	20	BLDG 5 REC	18
19	BLDG 5A REC	20	1	12	12	12	MC	1260	A	2100	3/4	10		8	3	35	SF-6A (2)	20
21	EF-6B (2)	35	3	8		10	3/4	2100	B	2100				8				22
23	"			8				2100	C	2100				8				24
25	"			8				2100	A	1920	MC	10	10	10	1	30	DOOR OPENER (1)	26
27	DOOR OPENER (2)	30	1	10	10	10	MC	1920	B	1920	MC	10	10	10	1	30	DOOR OPENER (3)	28
29	BAY REC	20	1	12	12	12	MC	360	C	360	MC	12	12	12	1	20	BAY REC	30
31	SPARE								A								SPARE	32
33	SPARE								B								SPARE	34
35	SPARE								C								SPARE	36
37	SPARE								A								SPARE	38
39	SPARE								B								SPARE	40
41	SPARE								C								SPARE	42

CONNECTED VA	14,472	A	121	CONNECTED AMPS
CONNECTED VA	14,538	B	121	CONNECTED AMPS
CONNECTED VA	12,816	C	107	CONNECTED AMPS
TOTAL CONNECTED VA	41,826		116	AVERAGE CONNECTED AMPS
DEMAND VA	43,853		122	NEC DEMAND AMPS

WIRES BASED ON 75° C RATED CU WITH 75° C RATED TERMINALS

\\MYCLOUDEX2ULTRA\Public\DATA\Projects\cdi19\E1946 City Yards Storage Buildngs\elec\PANELS\[BLDG 6 PANEL.xlsx]INPUT 8/13/2019 9:45

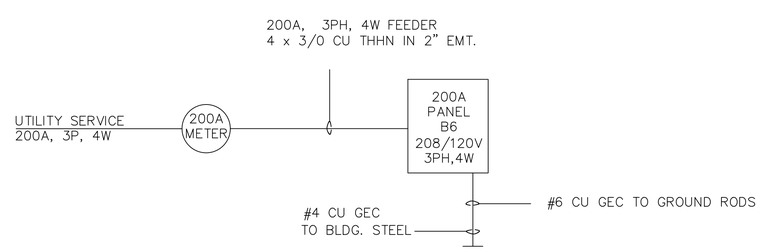

BUILDING #6 ONE LINE DIAGRAM

SCALE: N.T.S.

NORTH (Building)

CITY YARDS MAINTENANCE FACILITY:
RENOVATION AND ADDITIONS
301 EAST CORK ST.
WINCHESTER, VIRGINIA
22601

ARCHITECT:

Seal

PAINTER-LEWIS, P.L.C.
817 CEDAR CREEK GRADE, SUITE 120
WINCHESTER, VIRGINIA 22601
Telephone: (540) 662-5792
Facsimile: (540) 662-5793
Email: office@painterlewis.com
CONSULTING ENGINEERS

COMMONWEALTH OF VIRGINIA
TIMOTHY G. PAINTER
Lic. No. 018260
PROFESSIONAL ENGINEER

M.E.P. ENGINEERS:
CDi
Comfort Designs Inc.
620 Pennsylvania Avenue
Winchester, VA 22604
540 665-2846

Seal
COMMONWEALTH OF VIRGINIA
M. Howell
MICHAEL F. HOWELL
No.008875
5 AUG 2019
PROFESSIONAL ENGINEER

ISSUE/REVISIONS:

DRAWING TITLE:
PHASE I
BUILDING #6

SHEET TITLE:
POWER PLAN

DATE: AUGUST 5, 2019
PROJECT NO.: 1801014
SCALE: AS NOTED
SHEET:
E2.5

POWER SYMBOL LIST	
ALL JUNCTION BOXES AND OUTLETS SHALL HAVE A MECHANICALLY PRINTED PERMANENT LABEL ATTACHED INDICATING WHICH CIRCUIT AND PANEL SERVES THE JUNCTION BOX OR OUTLET. PRINTING MINIMUM HEIGHT 3/16"	
OUTLET AND SWITCH COLOR SHALL BE AS DIRECTED BY THE ARCHITECT. OUTLET AND SWITCH PLATES SHALL BE STAINLESS STEEL.	
SYMBOL	DESCRIPTION
	DUPLEX RECEPTACLE
	GFCI RECEPTACLE. WP DENOTES WEATHERPROOF COVER. COORDINATE MOUNTING HEIGHT AT COUNTERS AND CASEWORK
	CEILING MOUNTED RECEPTACLE.
	ELECTRONIC LOCK SET (CARD READER/PUSH BUTTON) SYSTEM. JUNCTION BOX LOCATED IN CEILING WITH PULL THRU WIRE TO SINGLE GANG BOX IN WALL. COORDINATE WITH OWNER FOR MOUNTING HEIGHT. (FOR EQUIPMENT INSTALLATION),
	CEILING MOUNTED JUNCTION BOX
	FUSED DISCONNECT SWITCH AND MOTOR CONNECTION. PROVIDE FUSES PER NAMEPLATE DATA.
	NFSS DISCONNECT AND WATER HEATER CONNECTION.
SF	SUPPLY FAN
EF	EXHAUST FAN
UH-1	UNIT HEATER
220	OUTLET CONNECTIONS FOR WELDER, AIR COMPRESSOR AND PLASMA CUTTER. FIELD COORDINATE EXACT LOCATIONS OF OUTLETS PRIOR TO INSTALLATION.
	PUSH BUTTON CONTROL FOR DOOR OPENERS

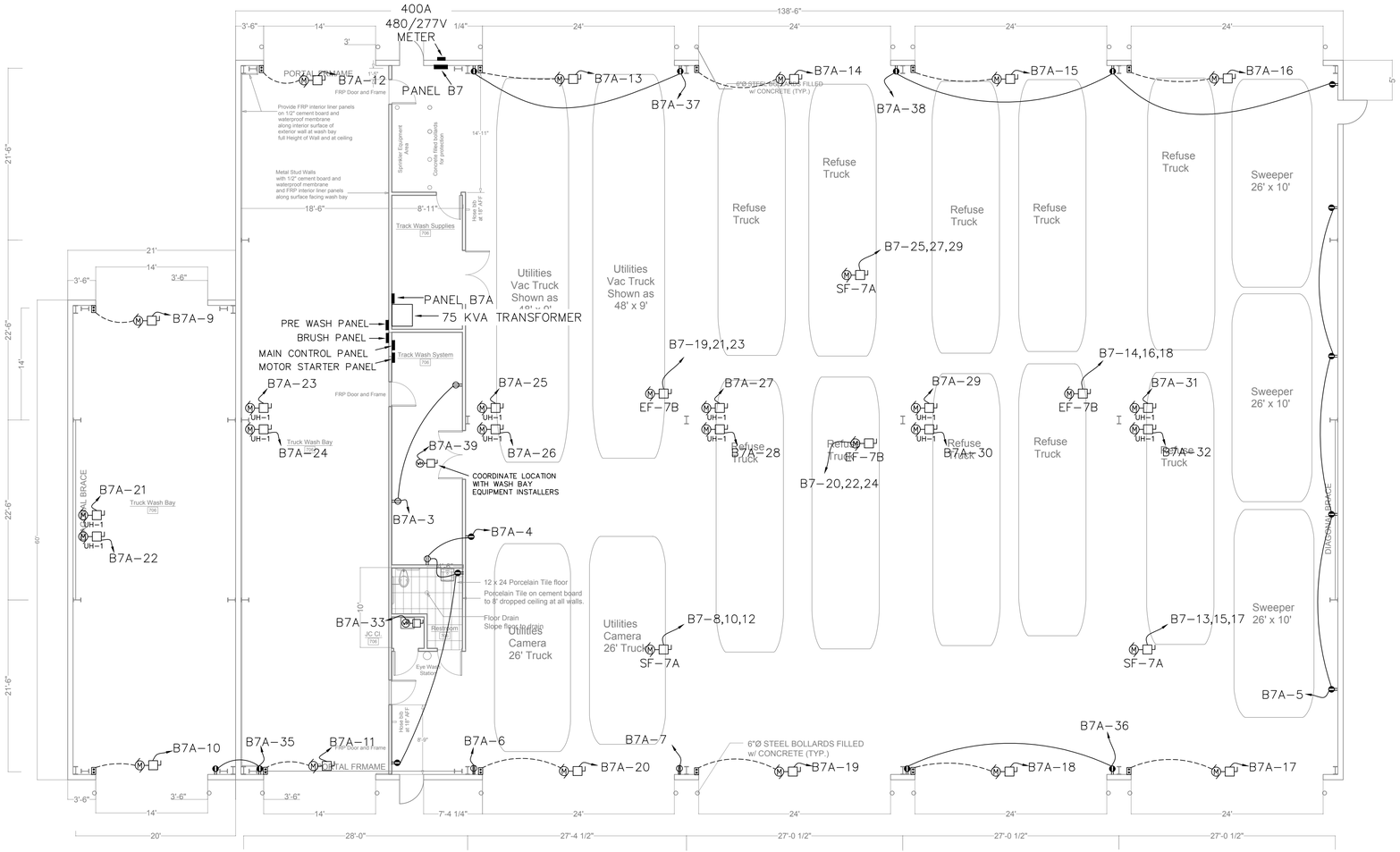

BUILDING #7 POWER PLAN

SCALE: 1/8"=1'-0"

B7		400	A	FRAME	3 PH	4 W	480Y/277	VOLT			MAIN CB SERVICE ENTRANCE				AIR:	10KA		
Ckt	DESCRIPTION	CB	POLE	PH	NEU	ECG	COND	VA	PH	VA	COND	EGC	NEU	PH	POLE	CB	DESCRIPTION	Ckt
1	BRUSH PANEL	20	3	12	12	12	MC	2493	A	5263	MC	10	10	10	3	30	PRE WASH PANEL	2
3	"			12				2493	B	5263				10			"	4
5	"			12				2493	C	5263				10			"	6
7	MOTOR STARTER	125	3	1	1	6	1-1/2	29916	A	5817	3/4	10		8	3	40	SF-7A (1)	8
9	"			1				29916	B	5817				8			"	10
11	"			1				29916	C	5817				8			"	12
13	SF-7A (2)	40	3	8		10	3/4	5817	A	5817	3/4	10		8	3	40	EF-7B (1)	14
15	"			8				5817	B	5817				8			"	16
17	"			8				5817	C	5817				8			"	18
19	EF-7B (2)	40	3	8		10	3/4	5817	A	5817	3/4	10		8	3	40	EF-7B (3)	20
21	"			8				5817	B	5817				8			"	22
23	"			8				5817	C	5817				8			"	24
25	SF-7A (3)	40	3	8		10	3/4	5817	A									26
27	"			8				5817	B									28
29	"			8				5817	C								SPARE	30
31	SPARE								A	15645	1-1/2	6		1	3	125	75KVA TRANSFORM	32
33	PANEL B7A	200	3	3/0	3/0	6	2		B	14280				1			"	34
35	"			3/0					C	13920				1			"	36
37	"			3/0					A								SPARE	38
39	SPARE								B								SPARE	40
41	SPARE								C								SPARE	42

CONNECTED VA	104,683	A	378	CONNECTED AMPS	WIRES BASED ON 75° C RATED CU
CONNECTED VA	101,134	B	365	CONNECTED AMPS	WITH 75° C RATED TERMINALS
CONNECTED VA	100,414	C	363	CONNECTED AMPS	
TOTAL CONNECTED VA	306,231		368	AVERAGE CONNECTED AMPS	
DEMAND VA	317,250		382	NEC DEMAND AMPS	

\\MYCLOUDEX2ULTRA\Public\DATA\Projects\cdi19\E1946 City Yards Storage Buildings\elec\PANELS\[B7 CITY YARDS BLD #7.xlsx]3ph42 8/13/2019 9:03

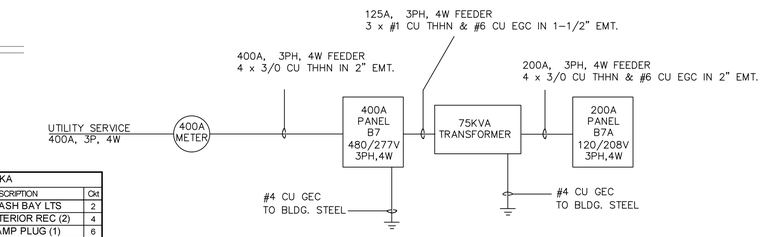

BUILDING #7 ONE LINE DIAGRAM

SCALE: N.T.S.

B7A		200	A	FRAME	3 PH	4 W	208Y/120	VOLT			MLO	PANELBOARD			AIR:	10KA		
Ckt	DESCRIPTION	CB	POLE	PH	NEU	ECG	COND	VA	PH	VA	COND	EGC	NEU	PH	POLE	CB	DESCRIPTION	Ckt
1	BAY LTS	20	1	12	12	12	MC	1489	A	983	MC	14	14	14	1	15	WASH BAY LTS	2
3	INTERIOR REC (1)	20	1	12	12	12	MC	900	B	900	MC	12	12	12	1	20	INTERIOR REC (2)	4
5	BAY WALL REC	20	1	12	12	12	MC	720	C	2880	MC	10	10	10	1	30	CAMP PLUG (1)	6
7	CAMP PLUG (2)	30	1	10	10	10	MC	2880	A								SPARE	8
9	DOOR OPENER (1)	15	1	14	14	14	MC	1176	B	1176	MC	14	14	14	1	15	DOOR OPENER (2)	10
11	DOOR OPENER (3)	15	1	14	14	14	MC	1176	C	1176	MC	14	14	14	1	15	DOOR OPENER (4)	12
13	DOOR OPENER (5)	20	1	12	12	12	MC	1920	A	1920	MC	12	12	12	1	20	DOOR OPENER (6)	14
15	DOOR OPENER (7)	20	1	12	12	12	MC	1920	B	1920	MC	12	12	12	1	20	DOOR OPENER (8)	16
17	DOOR OPENER (9)	20	1	12	12	12	MC	1920	C	1920	MC	12	12	12	1	20	DOOR OPENER (10)	18
19	DOOR OPENER (11)	20	1	12	12	12	MC	1920	A	1920	MC	12	12	12	1	20	DOOR OPENER (12)	20
21	UNIT HEATER (1)	20	1	12	12	12	MC	858	B	858	MC	12	12	12	1	20	UNIT HEATER (2)	22
23	UNIT HEATER (3)	20	1	12	12	12	MC	858	C	858	MC	12	12	12	1	20	UNIT HEATER (4)	24
25	UNIT HEATER (5)	20	1	12	12	12	MC	858	A	858	MC	12	12	12	1	20	UNIT HEATER (6)	26
27	UNIT HEATER (7)	20	1	12	12	12	MC	858	B	858	MC	12	12	12	1	20	UNIT HEATER (8)	28
29	UNIT HEATER (9)	20	1	12	12	12	MC	858	C	858	MC	12	12	12	1	20	UNIT HEATER (10)	30
31	UNIT HEATER (11)	20	1	12	12	12	MC	858	A	858	MC	12	12	12	1	20	UNIT HEATER (12)	32
33	HWH	15	1	14	14	14	MC	696	B	2160	MC	12	12	12	1	20	W MASTER PNL	34
35	BAY REC	20	1	12	12	12	MC	360	C	360	MC	12	12	12	1	20	BAY REC	36
37	BAY REC	20	1	12	12	12	MC	360	A	540	MC	12	12	12	1	20	BAY REC	38
39	HWH	15	1	14	14	14	MC	696	B								SPARE	40
41	SPARE								C								SPARE	42

CONNECTED VA	17,364	A	145	CONNECTED AMPS	WIRES BASED ON 75° C RATED CU
CONNECTED VA	14,976	B	125	CONNECTED AMPS	WITH 75° C RATED TERMINALS
CONNECTED VA	13,944	C	116	CONNECTED AMPS	
TOTAL CONNECTED VA	46,284		128	AVERAGE CONNECTED AMPS	
DEMAND VA	50,304		140	NEC DEMAND AMPS	

\\MYCLOUDEX2ULTRA\Public\DATA\Projects\cdi19\E1946 City Yards Storage Buildngs\elec\PANELS\[City Yards Bldg. #7 Panel.xlsx]INPUT 8/13/2019 10:02

NORTH (Building)

CITY YARDS MAINTENANCE FACILITY: RENOVATION AND ADDITIONS
301 EAST CORK ST.
WINCHESTER, VIRGINIA 22601

ARCHITECT:
GDA
Graves & Duff/Olio Architects plc

Seal

PAINTER-LEWIS, P.L.C.
817 CEDAR CREEK GRADE, SUITE 120
WINCHESTER, VIRGINIA 22601
Telephone: (540) 662-5792
Facsimile: (540) 662-5793
Email: office@painterlewis.com
CONSULTING ENGINEERS

COMMONWEALTH OF VIRGINIA
TIMOTHY G. PAINTER
Lic. No. 018260
PROFESSIONAL ENGINEER

M.E.P. ENGINEERS:
CDi
Comfort Designs Inc.
620 Pennsylvania Avenue
Winchester, VA 22604
540 665-2846

Seal
COMMONWEALTH OF VIRGINIA
M. Howell
MICHAEL F. HOWELL
No.008875
5 AUG 2019
PROFESSIONAL ENGINEER

ISSUE/REVISIONS:

DRAWING TITLE:
PHASE II
BUILDING #7

SHEET TITLE:
ONE LINE DIAGRAM

DATE: AUGUST 5, 2019
PROJECT NO.: 1801014
SCALE: AS NOTED
SHEET: E2.6

ELECTRICAL NOTES:

BASIC METHODS AND REQUIREMENTS:

1. The Electrical Contractor shall provide all labor, material, equipment, tools and services required to construct, install, complete, test, and commission the operation of the electrical systems identified within the construction documents. It is the intent of these contract documents to call for finished work, tested, and ready for operation.
2. Wherever the work "provide" is used it shall mean to furnish and install complete and ready for use.
   a. Provide all materials, bracing, hangers, connectors, and components as required to provide a complete operational electrical system.
   b. All items not specifically shown in the design documents, but which are necessary for a complete working installation in compliance with code requirements shall be provided at no additional cost.
3. The installation shall comply with applicable requirements of the International Building Code (IBC), NFPA 70 (NEC), NFPA 101 (Life Safety Code), ADA, and all local codes in effect at the project location at the time of contract award.
4. FAULT CURRENT AND ARC FLASH PROTECTION BOUNDARY: Service equipment in other than dwelling units shall be legibly marked in the field with the maximum available fault current. The contractor shall coordinate with the serving utility to obtain the fault current at the serving transformer and perform a fault current calculation that includes the service entrance conductors as routed in the field. This calculation shall be done prior to ordering service equipment, panelboards, etc. to confirm estimated values shown in the design prior to ordering. The markings shall include the date the fault current calculation was made and be of sufficient durability to withstand the environment of the installation. For projects that involve a modification to the electrical installation that will affect the available fault current, the contractor shall recalculate the available fault current based upon the components selected for the modification. The contractor shall coordinate with the supplier of the service equipment to determine the arc-flash protection boundary and required PPE in compliance with the requirements of NFPA 70E. The arc flash protection boundary shall be marked based upon the available fault current at the service equipment and the protective device response times being provided at the service disconnect. The equipment shall be marked with the incident energy or required level of PPE per NFPA 70E.
5. The drawings indicate the extent, general location and arrangement of equipment, components, and wiring. The contractor shall review all project requirements and coordinate the electrical installation with all trades.
   a. The Contractor shall become familiar with the work and verify all dimensions and locations so that the outlets, devices, raceways and equipment will be properly located and accessible. Actual field measurements shall prevail over any scaled measurements taken from these drawings.
   b. The Contractor shall confirm the location of all equipment that requires electrical connections with the trade installing the equipment prior to rough in of the associated electrical devices, disconnects, raceways, and wiring.
   c. The contractor shall confirm the electrical requirements and configuration (including overcurrent protective device ratings and conductor sizing) of circuits required for all equipment that requires electrical connection with the installer of such equipment prior to rough-in or installation of related electrical items.
   d. Rework required that results from failure to coordinate shall be done at the contractor's expense.
6. The drawings are diagrammatic only, intending to show general location of circuits, equipment, fixtures, and devices; and do not show all required details. All work shall be accurately laid out with reference to the drawings and in cooperation with other trades to avoid conflicts and to obtain a neat and workable installation which will afford maximum accessibility for operation, maintenance, and headroom. The electrical contractor is responsible for determining optimal routing of circuits and field investigations required to complete the installation in a professional workmanship manner. Refer to architectural drawings for exact dimensions and to mechanical drawings for locations of mechanical equipment. The contractor shall field determine final locations for outlets to comply with distance and spacing requirements of the NEC.
7. The drawings are not intended to be rigid in specific details. In the event they are in conflict with requirements of other drawings, codes, or recommendations of the manufacturers of equipment furnished, the Electrical Contractor shall inform the General Contractor and make recommendations as required to insure that equipment is installed and connected in conformance with codes and manufacturer's recommendations for safe, proper, and efficient operation. The General Contractor shall issue a Request for Information with the proposed recommendation to the Architect.
8. The contractor, by accepting the work, represents that it is qualified to successfully accomplish the work without additional direction by the design engineer. The design engineer is not responsible for means, methods, techniques, or procedures used by the contractor during construction.
9. By submitting a proposal, contractor agrees it is satisfied from its own investigation of the conditions and requirements to be met, that it fully understands its obligation, and that it will not make any claim for or have the right to cancellation of or relief from the Contract because of any misunderstanding or lack of information. A submission of a bid for this work acknowledges that the contractor has read all terms and conditions for the work and that all terms and conditions are acceptable.
10. In the event of conflict between various parts of the contract documents, including but not limited to drawings and general conditions, the more stringent (more costly) of the conditions shall apply for bidding purposes. The contractor shall request clarification for all conflicts prior to construction. The contractor shall make a thorough examination of the site and the contract documents. No claim for extra compensation will be recognized if difficulties are encountered which an examination of site conditions and contract documents prior to executing the contract would have revealed. Failure to request clarification shall not relieve the contractor of the requirement to provide the more costly implementation. If any conflicts occur necessitating departures from the drawings, details of and reasons for departures shall be submitted and approved prior to implementing any change.
11. All wiring not furnished and installed by others but which is required to provide a complete and operational system for equipment indicated on the drawings shall be furnished and installed by the electrical contractor. Except as otherwise noted, automatic control wiring, signaling, and protective devices for mechanical equipment shall be furnished and installed by the mechanical contractor. Each motor or group of motors requiring a single control shall be provided by others with a suitable controller. The electrical contractor shall install and connect the motor controllers furnished by others. Low voltage control devices (thermostats, limit switches, etc.) and wiring (24 Volts max.) will be installed by others. Control devices and wiring above 24 Volts shall be installed by the electrical contractor. Each motor shall be provided with a disconnecting means where required by NFPA 70, even if not shown on the drawings.
12. Procure and pay for all permits and certificates necessary to construct and place in operation all electrical work. Pay for all legally imposed charges made by the local authorities for full inspection and approval services of the bureaus administering applicable codes and regulations. This shall include the cost and back charge of installing any portion of the work where performed by utility departments, and utility companies such as for trenching and installation on conduit. Capital improvement costs that may be imposed by the utility for new or upgraded service (such as extending primary wiring to transformers or upgrading transformers) shall be paid by the owner.

MATERIALS

1. Material and equipment shall be new and shall be the standard specification grade products of established manufacturers. Materials, equipment, and installation shall conform to the requirements of ANSI, IEEE, NEMA, and UL as applicable
2. Submit for approval catalog information for: Lighting Fixtures, Lighting Controls, Panelboards, and Fire Alarm System (when shown on drawings).
3. Equipment and material shall be protected during shipment and storage against physical damage, dirt, moisture, cold and rain.
4. Unless otherwise indicated, wiring shall consist of insulated conductors installed in conduit or tubing. Unless shown otherwise, minimum conduit size shall be 3/4". All conductors shall be copper with type THWN/THHN insulation rated 90C. Conductor sizing is based upon use of terminals rated 75C. Aluminum conductors of equivalent ampacity may be used for circuits 100 Amps or larger. The Contractor shall make all required changes to conduit sizes, terminals, and sizing for voltage drop for conductor substitutions at no additional cost. Conductors shall be color coded: Black (A), Red (B), Blue (C) , White (neutral), for 208/120 and Brown (A), Orange (B), Yellow(C), Gray (Neutral) for 480/277. Ground (EGC) conductors shall be Green or Green/Yellow striped.
5. Where wiring type is shown as MC, NEC compliant installation of MC cable will be permitted. For projects that include patient care areas, exam rooms, and medical equipment circuits, cable shown as MC for these areas shall be type HCF-MC-AP and the installation shall comply with NEC 517.
6. Where wiring type is shown as NM, NEC compliant installation of type NM cable will be permitted.
7. Wire sizes, including equipment grounding conductors, shall be adjusted for voltage drop based upon actual circuit lengths of installed wiring to achieve 3% voltage drop for branch circuits and 2% voltage drop for feeders. Raceway sizes shall be revised as needed for upsized conductors.
8. Nonmetallic conduit and tubing shall be used in damp, wet, or corrosive locations. EMT may be installed only within buildings. EMT may be installed in concrete and grout in dry locations. EMT shall not be installed in damp or wet locations, or in the air space of exterior masonry cavity walls. Aluminum conduit may be used only where installed exposed in dry locations. Non-aluminum sleeves shall be used where aluminum conduit passes through concrete floors and fire walls. Conduit used in areas subject to damage shall be rigid steel up to a height of 10 ft. above finished floor. Flexible metallic cable (Type MC) may be used where allowed by NFPA 70. Non-metallic cable (Type NM-B) may only be used where allowed by NFPA 70 and when wiring type is shown as NM in panel schedules Bushings shall be of the insulating type
9. Panelboards shall be completely factory assembled with molded case circuit breakers. Short circuit interrupting ratings (AIR) of all provided components shall be coordinated with the ratings of all new and any existing electrical gear. Series rated assemblies are not permitted. Panelboards and loadcenters shall be equipped with arc fault circuit interrupter, combination type, circuit breakers to provide AFCI protection per NEC requirements.
10. Lighting controls shall be provided in accordance with IECC or ASHRAE requirements as enforced by state building codes. Control schemes shown on the drawings are diagrammatical only and the contractor shall finalize design details and component selection to achieve the required operational performance. Refer to functional testing requirements later in these notes.
11. Receptacles and switches shall be specification grade. Standard duplex receptacles shall be single phase, 15 Ampere, 120 volts, 2 pole, 3 wire, and conform to the NEMA 5-15R in dwellings and 5-20R in commercial applications. GFCI outlets shall be provided in all locations required by the NEC whether noted on plans or not. AFCI protection is required per the NEC. Devices and cover-plates shall be of the color and material determined by the architect. Outlets shall be hospital grade in patient bed areas of health care facilities per NEC. Dimmer switches shall be specification grade and be matched to the load being served (incandescent, fluorescent, LED, or 0-10V)

INSTALLATION

1. The work shall be laid out in advance, and where cutting, channeling, chasing, or drilling of floors, walls, partitions, ceilings, or other surfaces is necessary for the proper installation, support, or anchorage of the conduit, raceways, or other electrical work, this work shall be done and any damage to building, piping, or equipment shall be repaired by skilled tradesmen of the trades involved at no additional cost to the owner.
2. During installation, enclosures, equipment, controls, controllers, circuit protective devices, and other like items, shall be protected against entry of foreign matter; and be vacuum cleaned both inside and outside before testing, operating and painting.
   a. Damaged equipment shall be placed in first class operating condition or be returned to the source of supply for repair or replacement
   b. Painted surfaces shall be protected with factory installed removable heavy protective paper, sheet vinyl, or equivalent covering.
   c. Damaged paint on equipment and materials shall be refinished with the same quality of paint and workmanship as used by the manufacturer so that repaired areas are not obvious.
3. The contractor shall perform all temporary work necessary to maintain continuity of electrical service when connection is made to existing systems and facilities. Existing services shall not be interrupted without prior consent of the owner's authorized representative and may be interrupted only at and for the specified time designated by the owner's representative.
4. Electrical service entrance equipment, including arrangements for temporary power, shall conform to the serving power company's requirements. Coordinate routing, trenching, and conduit requirements with the power company.
5. The electrical contractor shall obtain available short circuit information from the supplying utility and perform a short circuit analysis of the available short circuit at the service equipment using the information obtained from the utility. The analysis shall include the impact of the service entrance conductors (size, material, distance) either installed by the utility or installed as part of the project. Based upon this information, the electrical contractor shall install a NEC compliant label on the service equipment stating:
   a. The available fault current at the service equipment.
   b. The nominal system voltage of the service equipment.
   c. The clearing time of the service protection device (based upon manufacrturer's date for the actual equipment installed).
   d. Date that the label was installed.
6. The contractor shall provide product finishes and constructions compatible with wall and ceiling types based upon the contractor's review of all project requirements.
7. Penetrations of above grade floor slabs, time-rated partitions, and fire walls shall be fire stopped. Penetrations of fire rated floors, walls, and ceilings shall be installed in accordance with listed UL applications. See architectural drawings for location of fire rated assemblies. Materials and equipment shall be installed in accordance with recommendations of the manufacturer. At floor, exterior wall, and roof conduit penetrations, completely seal clearances around the conduit and make watertight
8. Raceways shall be kept 6 inches away from parallel runs of flues and hot-water pipes. Raceways shall be concealed within finished walls, ceilings, and floors of finished areas. Raceways may be run exposed in non-finished areas, such as utility rooms. Install conduit in complete runs before pulling in cables or wires. Independently support conduit. Do not use other supports i.e., (suspended ceilings, suspended ceiling supporting members, lighting fixtures, mechanical piping, or mechanical ducts).
9. All electrical wiring below slab on grade shall be provided by a PVC conduit system. Raceways crossing structural expansion joints shall have expansion fittings. Changes in direction of runs shall be made with symmetrical bends or fittings. Crushed or deformed raceways shall not be installed. Trapped raceways in damp and wet locations shall not be installed. Clogged raceways shall be entirely free of obstructions or shall be replaced.
10. Panelboards shall be flush when installed on finished wall surfaces. Panelboards shall be surface mount when installed in unfinished rooms. Where designated on panel schedule as "space" or "spare", include all necessary bussing, device support and connections. Provide blank cover for each space.
11. Placement of lighting fixtures, outlets, panelboards, transformers, disconnect switches and other items shall be located to avoid interference with mechanical or structural features.
12. Lighting fixtures shall be symmetrically placed in rooms.
   a. Lighting fixtures that are non-IC rated shall be installed such that no insulation is within 3 inches of the fixture and none on top so as to trap heat. Non-IC lighting fixtures shall not be installed within 1/2 inch of combustible material.
   b. Lighting fixtures installed in fire rated ceilings shall be rated for equivalent fire resistance, or equipped with a boot or box-out to maintain the ceiling system fire rating.
   c. The contractor shall field confirm all new and existing ceiling types to identify mounting requirements prior to order of lighting fixtures. All accessories and options required to successfully install the fixtures in the ceilings shall be provided, including those needed for fire rated applications.
   d. All open bay and similar lighting fixtures shall be supported by unistrut that spans structural joists. Unistrut shall be supported by the top cord of the structural joists only. Alternative suppporting schemes must be approved.
   e. Connect recessed lighting fixtures to conduit runs with maximum six feet of flexible metal conduit extending from a junction box to the fixture.
   f. At completion of project, re-lamp/re-ballast fixtures which have failed lamps/ballasts. Clean fixtures, lenses, diffusers and louvers that have accumulated dust/dirt/fingerprints during construction. Replace damaged lenses, diffusers and louvers with new.
13. Where light switches are shown grouped together they shall be mounted under a multi-gang cover-plate. Where dimmer switched are used, the mounting box size shall be based upon thermal de-rating requirements of the dimmers.
14. Outlets shall be mounted not less than 15" above finished floor per ADA guidelines. Switches shall be mounted not more than 48" above finished floor per ADA guidelines. Outlets and switches at counter top locations shall be mounted not more than 44"-46" above finished floor per ADA guidelines. Field coordinate location of counter mounted devises with counter installer.
15. The Electrical contractor shall coordinate with the Mechanical contractor for the installation of electrical components required to serve mechanical equipment. The contractor shall confirm equipment circuit requirements with the Mechanical contractor prior to rough-in of electrical circuits. Any re-work required to provide the electrical installation needed for compliance with actual nameplate requirements for equipment shall be accomplished at no additional cost. Nameplate data of actual equipment supplied shall be used for final circuit configurations. Adjustments from values shown on panel schedules shall be made as part of the contract.
16. The electrical contractor shall review the hardware schedule and coordinate with the door hardware installer and provide 120V electrical power at locations required for proper operation of door openers, power supplies, and controls. Low voltage wiring by door installers.
17. Make final connections to equipment supplied by others. Controls and starters related to mechanical equipment shall be supplied by the mechanical contractor. Controls and starters for owner furnished equipment shall be supplied by others. Electrical contractor shall make electrical connections to equipment from point of electrical circuit shown on drawings for equipment. Electrical contractor shall make connections to owner furnished equipment serviced by either hard wiring or service cord drops. Electrical contractor shall provide means of disconnection of equipment from electrical circuit if starter or controller supplied with equipment does not meet NEC requirements for disconnect.
18. Install green grounding conductors with feeders and branch circuits as indicated in panel schedules and one line diagram. Bond the grounding wires to each pullbox, junction box, outlet box, cabinets, and other enclosures through which the ground wires pass. Bond all conductive piping systems in the building to the electrical system ground. Bonding connections shall be made as close as practical to the water pipe ground or service equipment ground bus.
19. Major pieces of electrical equipment shall be permanently marked with an identification nameplate. All panelboards shall have removable typewritten panel directories inserted into plastic sleeves mounted on the inside face of the panelboard door. The directory shall describe the as-built circuit configurations of the panel per NEC requirements. Marking directly on the panelboard is not permitted. All junction boxes and outlets shall have a mechanically printed permanent label attached indicating which circuit and panel serves the junction box or outlet.
20. Duct smoke detector requirements shall be installed per local code requirements. The Electrical contractor shall coordinate with the Mechanical contractor for control interface requirements.
21. After the electrical installation is completed, the Electrical Contractor shall conduct a safety and an operating test of the electrical system. The electrical contractor shall furnish all instruments and personnel required for the tests. No part of the electrical distribution system shall be energized prior to the testing of the grounding system. Resistance tests shall be made for service entrances and feeders installed as part of this project. Proper phase rotation shall be confirmed for all 3 phase motors.
22. Functional testing or lighting controls shall be performed in accordance with IECC or ASHRAE requirements locally enforced. The testing shall demonstrate controls are calibrated, adjusted, programmed and in proper working condition. Testing shall confirm proper operation of occupancy sensors, photo sensors, and time switches. The contractor shall instruct the client as to the proper operation and programming requirements of the system. The functional testing must be made by an independent party, such as a representative of the lighting control manufacturer, who is not part of the building design engineering firm or a member of the construction contractor's team. The testing party shall provide documentation certifying operational compliance with energy code requirements.
23. All work shall pass inspection by proper authorities prior to acceptance by the owner. Costs for permits, certificates, and inspections required for completion of the work shall be paid by the Electrical Contractor.
24. The contractor shall warrant the complete electrical installation at the time of completion for a period of one year. During the warranty period the contractor shall replace or repair any components or work which develop defects beyond normal wear and tear. The electrical contractor shall be responsible for, and shall incur financial responsibility for any damages caused by or resulting from defects in his work.
25. The contractor shall provide as-built and record drawings indicating all changes in equipment, devices, and conduit locations to the general contractor for delivery to the owner as part of the project close-out

END OF NOTES

NORTH (Building)

CITY YARDS MAINTENANCE FACILITY: RENOVATION AND ADDITIONS
301 East Cork St.
Winchester, Virginia 22601

CITY OF WINCHESTER VIRGINIA

ARCHITECT:

GDA

Seal

PAINTER-LEWIS, P.L.C.
817 CEDAR CREEK GRADE, SUITE 120
WINCHESTER, VIRGINIA 22601
Telephone: (540) 662-5792
Facsimile: (540) 662-5793
Email: office@painterlewis.com
CONSULTING ENGINEERS

COMMONWEALTH OF VIRGINIA
TIMOTHY G. PAINTER
Lic. No. 018260
PROFESSIONAL ENGINEER

M.E.P. ENGINEERS:
CDi
Comfort Designs Inc.
620 Pennsylvania Avenue
Winchester, VA 22604
540 665-2846

Seal

COMMONWEALTH OF VIRGINIA
M Howell
MICHAEL F. HOWELL
No.008875
5 AUG 2019
PROFESSIONAL ENGINEER

ISSUE/REVISIONS:

DRAWING TITLE:
ELECTRICAL NOTES

SHEET TITLE:
ELECTRICAL NOTES

DATE:	AUGUST 5, 2019
PROJECT NO.:	1801014
SCALE:	AS NOTED
SHEET:	E3.1