INVITATION TO BID
No. 201910

CONSTRUCTION OF GATEWAY "WELCOME TO WINCHESTER" SIGNS

FOR THE
DEPARTMENT OF PUBLIC SERVICES

City of Winchester
Rouss City Hall
15 North Cameron Street, Winchester, VA 22601

February 2019

CITY OF WINCHESTER
CONSTRUCTION OF GATEWAY "WELCOME TO WINCHESTER" SIGNS

ITB# 201910
Table of Contents

BIDDING DOCUMENTS

- Invitation to Bid
- Instructions to Bidders
- Bid Form
- Bid Bond
- Non-Collusion Affidavit
- Contract
- Performance Bond
- Labor and Material Payment Bond
- Notice of Intent to Award
- Notice of Award
- Notice to Proceed
- City of Winchester Required General Terms and Conditions
- General Conditions
- Supplement to General Conditions
- Special Terms and Conditions

TECHNICAL SPECIFICATIONS

- Scope of Work
- Traffic Control
- Welcome to Winchester Sign

DRAWINGS

INVITATION TO BID
CONSTRUCTION OF GATEWAY "WELCOME TO WINCHESTER" SIGNS
ITB# 201910

The City of Winchester is submitting this Invitation to Bid to establish a contract with qualified Contractors furnishing all labor, equipment, transportation and materials necessary for the following project:

CONSTRUCTION OF GATEWAY
"WELCOME TO WINCHESTER" SIGNS

Work will consist of constructing three (3) gateway signs at major entry points into the City of Winchester. These locations consist of the following: (1) U.S. Route 50 (Amherst Street); (2) U.S. Route 11 (Valley Avenue); and (3) Virginia Route 7 (Berryville Avenue).

Contract Specifications may be obtained from the below address and all bids shall be received at:

City of Winchester, Virginia
Finance Department - Purchasing Division
Rouss City Hall, 4th Floor
15 North Cameron Street
Winchester, Virginia 22601
Telephone (540) 667-2378

The contract documents and drawings may be downloaded at no cost from the City's website at: http://www.winchesterva.gov/purchasing/itbrfp.php

Any questions regarding the contract documents or drawings shall be sent **in writing via e-mail** to:

Perry Eisenach: perry.eisenach@winchesterva.gov

Bid prices shall be made on the blank Bid Form provided herein. Bids shall be delivered to the above address on or before **2:00 p.m. March 5, 2019,** at which time the bids shall be publicly read aloud.

Bids will be received only from contractors who are registered in the Commonwealth of Virginia. **Bidders shall indicate on the outside of the envelope containing the Bid their current Virginia Contractor's Registration Number. Bids without this information on the outside of the envelope may be non-responsive.**

Each Bid shall also be accompanied by a satisfactory Bid Guarantee in the amount of 5% of the bid, in the form of a certified or cashier's check drawn on a bank chartered under the laws of the Commonwealth of Virginia; payable to the Treasurer of the City of Winchester, or a Bid Bond, as a guarantee that the bidder will within fifteen (15) days after the date of the award of the Contract, execute an agreement and file insurance as required by the Contract Documents if his proposal is accepted. If the successful bidder fails to execute and file the agreement and insurance, the amount of the Bid Guarantee shall be forfeited. Bids without a satisfactory Bid Guarantee shall be rejected.

Performance and Payment Bonds will be required of the successful bidder, each in an amount equal to one hundred (100) percent of the amount of the Contract, conditioned upon the faithful performance of the Contract and to the payment in full to all persons furnishing labor, materials, equipment, etc., for and in connection with the work to be performed under the contract.

Bidder desiring to withdraw his bid after the bid opening procedure, shall give notice in writing of his claim of right to withdraw his bid within two (2) business days after the conclusion of the bid opening procedure. Bidder shall submit to the City his original work papers; documents and materials used in preparation of the bid sought to be withdrawn. Bidder withdrawing his bid that does not meet these requirements shall forfeit their bid bond.

The City of Winchester reserves the right to reject any proposal for failure to comply with all requirements of this notice or any of the Contract Documents; however, it may waive any minor defects or informalities at its discretion. The City further reserves the right to reject any and all proposals, cancel the ITB at any time prior to award or to award a contract that in its judgment is in the best interest of the City.

CITY OF WINCHESTER, VIRGINIA

BY: Mike Marzullo, Purchasing Agent

CONSTRUCTION OF GATEWAY
"WELCOME TO WINCHESTER"
SIGNS
ITB# 201910

INSTRUCTIONS TO BIDDERS

1. OWNER AND ENGINEER:

The Owner is the City of Winchester Department of Public Services, which shall be represented by the City Engineer or his designee who shall perform the duties of the Engineer. Telephone: Department of Public Services, (540) 667-1815.

2. COPIES OF CONTRACT DOCUMENTS:

2.01 Bidding Documents may be examined and downloaded from the City's website at http://www.winchesterva.gov/purchasing/itbrfp at no charge.

City of Winchester, Virginia
Finance Department - Purchasing Division
Rouss City Hall, 4th Floor
15 North Cameron Street
Winchester, Virginia 22601
Telephone: (540) 667-2378

2.02 Complete set of Bidding Documents shall be used in preparing bids; neither the Owner nor the Engineer assumes any responsibility for errors or misinterpretations resulting from the use of incomplete sets of Bidding Documents. Owner and Engineer in making copies of Bidding Documents available on the above terms do so only for the purpose of obtaining bids on the Work and do not confer a license or grant for any other use.

3. EXAMINATION OF CONTRACT DOCUMENTS AND SITE:

3.01 Before submitting a bid, each bidder must examine the Contract Documents thoroughly, visit the site to familiarize himself with local conditions that may in any manner affect cost, progress, or performance of the work, familiarize himself with federal, state, and local laws, ordinances, rules, and regulations that may in any manner affect cost, progress, or performance of the work; and study and carefully correlate bidder's observations with the Contract Documents.

3.02 Before submitting his bid, each bidder will, at his own expense, make such additional investigations and tests as the bidder may deem necessary to determine his bid for performance of the work in accordance with time and other terms and conditions of the Contract Documents. The Contractor shall be responsible for taking his own borings or making any investigations he requires to establish subsurface conditions in the area of this Contract. The City does not assume any responsibility for the subsurface conditions which may be encountered. On request, Owner will provide each bidder access to the site to conduct such investigations.

3.03 The submission of a bid will constitute an incontrovertible representation by the bidder that he has examined the site and that the Contract Documents are sufficient in scope and detail to indicate and convey understanding of all terms and conditions of the Work.

3.04 It is understood and agreed by the bidder that the estimate of quantities (if provided) are approximate, and are presented in order to obtain unit prices and approximate amount of the Contract. The Contractor shall make no claim against the City because of any estimate, tests or representations made by any officer or agent of the City, which may prove to be in any respect erroneous.

3.05 Scope of the work is as specified herein. The Owner, however, reserves the right to make adjustments to the scope of the work. Such adjustments shall be accomplished by appropriate Change Orders.

4. SPECIFICATIONS:

The technical specifications for the project are provided within this contract document or on the drawings.

5. INTERPRETATIONS:

All questions about the discrepancies or ambiguities in the Contract Documents prior to the bid opening shall be submitted in writing via e-mail to the following:

Perry Eisenach: perry.eisenach@winchesterva.gov

Replies to questions will be issued by Addenda mailed or delivered to all parties recorded by the Purchasing Agent as having received the Bidding Documents or by posting on a Question and Answer Bulletin Board posted at the following location:

http://www.winchesterva.gov/purchasing/itbrfp

Questions received less than five (5) calendar days prior to the date for opening of bids may not be answered. Only questions answered by formal written Addenda or in writing on the Question and Answer Bulletin Board will be binding.

6. **REQUIRED BOND - BID GUARANTEE:**

6.01 Bid Guarantee shall be made payable to Owner, in an amount of five percent (5%) of the bidder's maximum bid price and in a form of a certified or cashier's check drawn on a bank chartered under the laws of the Commonwealth of Virginia; payable to the Treasurer, City of Winchester, or a Bid Bond issued by a surety having registered resident agents in Virginia.

6.02 The Bid Guarantee of the successful bidder will be retained until such bidder has executed the Agreement and furnished the required Contract Security, whereupon it will be returned. If the successful bidder fails to execute the agreement and furnish the required Contract Security within fifteen (15) calendar days of the Notice of Award, Owner may annul Notice of Award and the Bid Guarantee of the bidder will be forfeited.

7. **REQUIRED BONDS – PAYMENT AND PERFORMANCE:**

Performance and Payment Bonds will be required of the Successful bidder, each in an amount equal to one hundred percent (100%) of the amount of the Contract, conditioned upon the faithful performance of the Contract and to the payment in full to all persons furnishing labor, materials, equipment, etc., for and in connection with the work to be performed under the Contract.

8. **CONTRACT TIME:**

Contractor agrees that all work shall be completed within **180 calendar days** following the Notice to Proceed.

Owner and Contractor recognize that the time is of essence in this Contract, and if the work is not completed within the specified times outlined above, plus any extensions allowed, then the Contractor shall pay, as liquidated damages, $750.00 for each calendar day that expires after the specified completion date.

9. **PAYMENT PROCEDURE:**

9.01 The basis for payment shall be the actual percentage of work completed, as determined in the field by the Engineer.

9.02 An amount equal to five percent (5%) of each progress payment shall be held from each payment as retainage.

10. SUBCONTRACTORS:

10.01 The apparent successful bidder and any other bidder so requested, will within seven (7) days after the day of bid opening submit to Owner a list of all subcontractors and other persons and organizations, including those who are to furnish the principal items of material and equipment, proposed for the work. Such list shall be accompanied by an experience statement with pertinent information as to similar projects and other evidence of qualification for each such subcontractor, person, and organization. If Owner or Engineer, after due investigation has reasonable objection to any proposed subcontractor, other person or organization, either may before giving the Notice of Award request the apparent successful bidder to submit an acceptable substitute without an increase in Bid price. If the apparent successful bidder declines to make any such substitution, the Contract shall not be awarded to such bidder, but his declining to make any such substitution will not constitute grounds for sacrificing his Bid Bond. Any subcontractor, other person, or organization so listed and to whom Owner or Engineer does not make written objection prior to the giving of the Notice of Award will be deemed acceptable to Owner and Engineer.

10.02 No Contractor shall be required to employ any subcontractor, other person, or organization against whom he has reasonable objection.

11. SUBSTITUTE MATERIAL AND EQUIPMENT

11.01 Whenever it is indicated in the Contract Documents that a substitute or "or equal" item of material or equipment may be furnished or used by Contractor if acceptable to Engineer, application for such acceptance will not be considered until after the Effective Date of the Contract Agreement. The procedure for submittal of any such application by Contractor and consideration by Engineer is set forth in the General Conditions.

12. PREPARATION OF BID:

12.01 The Bid Form is included in these Specifications, and may not be altered in any way. Additional copies may be obtained from the City of Winchester.

12.02 Bid Forms must be completed in ink or by typewriter. The Total Base Bid price must be stated in words and numerals; in case of conflict, words will take precedence.

12.03 A. Bids MUST give full firm name and address of bidder. Failure to manually sign bid may disqualify it. Person signing bid will show TITLE or AUTHORITY TO BIND THE FIRM IN A CONTRACT. Firm name and authorized signature must appear on bid in the space provided on the bid form. Those authorized to sign are as follows:

If a sole proprietorship, the owner may sign.
If a general partnership, any general partner may sign.
If a limited partnership, a general partner must sign.
If a limited liability company, a “member” may sign or a “manager” must sign if so specified by the articles or organization.
If a regular corporation, the CEO, President or Vice-President must sign. Others may be granted authority to sign but the City requires that a corporate document authorizing him/her to sign be submitted with bid.

B. Contractor's license or registration number shall be entered in the space provided on the Bid Form.

C. A bidder or offeror organized or authorized to transact business in the Commonwealth pursuant to Title 13.1 or Title 50 of the Code of Virginia shall include in its bid or proposal the identification number issued to it by the State Corporation Commission (SCC). Any bidder or offeror that is not required to be authorized to transact business in the Commonwealth as a foreign business entity under Title 13.1 or Title 50 of the Code of Virginia or as otherwise required by law shall include in its bid or proposal a statement describing why the bidder or offeror is not required to be so authorized. Any bidder or offeror described herein that fails to provide the required information may not receive an award unless a waiver of this requirement and the administrative policies and procedures established to implement this section is granted by the City Manager. The SCC may be reached at (804) 371-9733 or at http://www.scc.virginia.gov/default.aspx.

12.04 Bidder shall make acknowledgement on the Bid Form of receipt of all Addenda, the numbers of which shall be filled in the Bid Form.

SUBMISSION OF BIDS:

13.01 Bids shall be submitted at the time and place indicated in the Invitation to Bid and shall be included in an opaque sealed envelope, along with the Bid Bond, Non-collusion Affidavit, and other required documents. The sealed envelope shall indicate the Project Title, name and address of the bidder, and State Registration No. of the bidder. If the bid is sent through the mail, or other delivery system, the sealed envelope shall be enclosed in a separate envelope with the notation **"BID ENCLOSED"** on the face thereof.

13.02 Timely delivery of the Bid shall be the sole responsibility of the Bidder. Bids must be received not later than the time and date stated in the Invitation to Bid. Bids by telephone, facsimile or other forms shall not be accepted.

14. MODIFICATION AND WITHDRAWAL OF BIDS:

14.01 Bids may be modified or withdrawn by an appropriate document duly executed (in the manner that a bid must be executed) and delivered to the place where bids are to be submitted at any time prior to opening of the bids. The request for withdrawal or modification must be in writing and signed by a person duly authorized to do so.

14.02 No bidder may withdraw his bid within thirty (30) calendar days after the actual date of the bid opening, except as allowed by the Code of the City of Winchester, Virginia, Section 21-43(a), which states "the Bidder shall give notice in writing of his claim of rights to withdraw this bid within two (2) business days after the conclusion of the bid opening procedure". Bidder shall submit to the Owner his original work papers, documents and materials used in preparation of his bid sought to be withdrawn.

OPENING OF BIDS:

14.03 Bids shall be opened publicly, and will be read aloud at the time and location indicated on the Invitation to Bid. An abstract of the amounts of the Bids shall be made available after the opening of bids.

14.04 All bids shall remain open for sixty (60) days after the day of the bid opening, but Owner may, in his sole discretion, release any bid and return the Bid Bond prior to that date.

AWARD OF CONTRACT:

14.05 Owner reserves the right to reject any and all bids, to waive any and all informalities and to negotiate Contract terms with the successful bidder, and the right to disregard all nonconforming, nonresponsive, or conditional bids. Discrepancies between words and figures shall be resolved in favor of words. Discrepancies between indicated sum of any column of figures and the correct sum thereof will be resolved in favor of the correct sum.

14.06 In evaluating bids, Owner will consider the qualifications of the bidders, whether or not the bids comply with the prescribed requirements, and alternates and unit prices if requested in the Bid Form. Owner may consider the qualifications and

experience of subcontractors and other persons and organizations proposed for the work.

14.07 Owner may conduct such investigations as he deems necessary to assist in the evaluation of any bid and to establish the responsibility, qualifications, and financial ability of the bidders, proposed subcontractors and other persons and organizations, to do the work in accordance with the Contract Documents and to the Owner's satisfaction within the prescribed time.

14.08 Owner reserves the right to reject the bid of any bidder who does not pass any such evaluations to Owner's satisfaction.

14.09 If the Contract is to be awarded, it will be awarded on a Base Bid price basis to the lowest responsive and responsible bidder, and whose evaluation by the Owner indicates that the award will be in the best interest of the Project and the City. Discounts for prompt payment, liquidated damages, and cash incentives will not be part of the award.

15. **NEGOTIATION WITH THE LOWEST BIDDER**:

Unless all bids are cancelled or rejected, the City of Winchester reserves the right granted by § 2.2-4318 of the *Code of Virginia* to negotiate with the lowest responsive, responsible bidder to obtain a contract price within the funds available to the agency whenever such low bid exceeds the agency's available funds. For the purpose of determining when such negotiations may take place, the term "available funds" shall mean those funds which were budgeted by the agency for this contract prior to the issuance of the written Invitation for Bids. Negotiations with the low bidder may include both modifications of the bid price and the Scope of Work/Specifications to be performed. The agency shall initiate such negotiations by written notice to the lowest responsive, responsible bidder that its bid exceeds the available funds and that the agency wishes to negotiate a lower contract price. The times, places, and manner of negotiating shall be agreed to by the agency and the lowest responsive, responsible bidder.

16. **SIGNING OF CONTRACT:**

Owner shall give Notice of Award to the successful bidder accompanied by at least three (3) unsigned counterparts of the Contract and all other Contract Documents. Within fifteen (15) days thereafter, Contractor shall sign and deliver at least three (3) counterparts of the Contract to the Owner with all other Contract Documents attached. Within ten (10) days thereafter, Owner will deliver all fully signed counterparts to Contractor. Engineer will identify those

portions of the Contract Documents not fully signed by Owner and Contractor and shall ensure that all parties appropriately execute all required portions of the contract immediately.

*** * * END OF SECTION * * ***

BID FORM
CITY OF WINCHESTER
CONSTRUCTION OF GATEWAY "WELCOME TO WINCHESTER" SIGNS
ITB# 201910

This Bid is submitted to:

City of Winchester, Virginia
Finance Department - Purchasing Division
Rouss City Hall, 1st Floor
15 North Cameron Street
Winchester, Virginia 22601

In submitting this Bid, bidder acknowledges that the bidder has examined copies of the following Contract Documents:

BIDDING DOCUMENTS

- Invitation to Bid
- Instructions to Bidders
- Bid Form
- Bid Bond
- Non-Collusion Affidavit
- Contract
- Performance Bond
- Labor and Material Payment Bond
- Notice of Intent to Award
- Notice of Award
- Notice to Proceed
- City of Winchester Required General Terms and Conditions
- General Conditions
- Supplement to General Conditions
- Special Terms and Conditions

TECHNICAL SPECIFICATIONS

- Scope of Work
- Traffic Control
- Welcome to Winchester Sign

DRAWINGS

ADDENDA:

NUMBER	DESCRIPTION	DATE

Receipt of all of above is hereby acknowledged.

CONTRACTOR: _____

BY (SIGNATURE): _____

NAME AND TITLE: _____

DATE: _____

BID ITEMS/QUANTITIES

(a) The Contractor shall provide all unit prices or lump sum prices for all bid items on the Bid Form herein. **If a unit price or lump sum price is omitted or left blank the bid and bidder shall be non-responsive.** The bid forms designate which prices are for *Install* only work, complete and in place, (i.e. assumes equipment and/ or materials will be supplied by the City). All other bid prices are for Furnish and Install work, complete and in place.

(b) The quantities shown for unit bid items are based upon the best information available at time of preparation of these bid documents, and are established for the purpose of obtaining a bid price. No adjustments to the bid prices based on changes to quantities will be considered. All bid prices will be held throughout the duration of the contract regardless of any increase or decrease in bid quantity.

(c) Emergency work shall be negotiated with a maximum allowable amount of 50% over the bid price by item. This excludes all lump sum bid items.

(d) All other bid items not listed or described in the Contract Documents will be negotiated between the City and the Contractor before the time of need. Once a negotiated price is established, it will be used for the remainder of the contract.

The undersigned Bidder proposes to complete all work in accordance with the Contract Documents for the following unit prices:

Item	**Units**	**Bid Price**
Sign on Berryville Avenue	Lump Sum	
Sign on Amherst Street	Lump Sum	
Sign on Valley Avenue	Lump Sum	
Total for All Three (3) Signs		

TOTAL BASE BID: $_____

IN WORDS:

_____

CONTRACTOR: _____

BY: (SIGNATURE) _____

NAME AND TITLE: _____

_____

DATE: _____

ADDRESS: _____

_____

_____

TELEPHONE: _____

CURRENT VIRGINIA CONTRACTOR REGISTRATION NUMBER: _____

NOTE: REQUIRED BID GUARANTEE MUST BE ENCLOSED WITH THIS BID PROPOSAL.

BID BOND

ITB# 201910 – Construction of Gateway "Welcome to Winchester" Signs

KNOW ALL MEN BY THESE PRESENTS THAT

_____

(Here insert the name & address or legal title of the Contractor)

as Principal, hereinafter called the Contractor and

_____

(Here insert the legal title of the Surety)

as Surety, hereinafter called the Surety, are held and firmly bound unto the City of Winchester, Virginia, as obligee, hereinafter called the Owner, in the amount of

_____

(Dollars)

($_____) for the payment whereof Contractor and Surety bind themselves, their heirs, executors, administrators, successors and assigns, jointly and severally, firmly by these presents.

WHEREAS, the Principal has submitted a Bid for:

ITB# 201910 – Construction of Gateway "Welcome to Winchester" Signs

In accordance with Drawing and Specifications prepared for the Public Services Department, City of Winchester, Virginia.

NOW, THEREFORE, THE CONDITION OF THIS OBLIGATION is such that, if the Obligee shall accept the Bid of the Principal and the Principal shall enter into a Contract with the Obligee in accordance with terms of such Bid, and give such bonds as specified in the Contract Documents with good and sufficient surety for the faithful performance of such Contract and for the prompt payment of labor and material furnished in the prosecution thereof, or in the event of the failure of the Principal to enter such Contract and give such bonds, if the Principal shall pay the Obligee the difference not to exceed the penalty hereof between the amount specified in said Bid and such larger amount for which the Obligee may

in good faith contract with another party to perform the Work covered by said Bid, then this obligation shall be null and void, otherwise to remain in full force and effect.

SIGNED AND SEALED THIS_____DAY OF_____A.D., 2019.

_____
PRINCIPAL

_____
TITLE

_____
WITNESS

_____
SURETY

_____
TITLE

_____
WITNESS

NON-COLLUSION AFFIDAVIT

STATE OF VIRGINIA

Ss: **ITB# 201910 – Construction of Gateway "Welcome to Winchester" Signs**

CITY OF WINCHESTER, COUNTY of FREDERICK

I, _____ of the City of _____

In the County of _____ and the State of

_____

Of full age, being duly sworn according to law or my oath depose and say that:

I am _____ of the firm of

_____,
the Company making the Bid for the above named project, and that I executed the said Bid with full authority to do so; that the Company has not, directly or indirectly, entered into any agreement, participated in any collusion, or otherwise taken any action in restraint of free, competitive bid preparation in connection with the above named project; and that all statements contained in said Bid and in this affidavit are true and correct, and made with full knowledge that the City of Winchester relies upon the truth of the statements contained in said Bid and in the statements contained in this affidavit in awarding the Contract for said Project.

I further warrant that no person or selling agency has been employed or retained to solicit or secure such contract upon an agreement or understanding for a commission, percentage, brokerage or contingent fee, except bona fide employees or bona fide established commercial or selling agencies maintained by:

_____
(Name of Contractor)

Subscribed and sworn to

_____
(Type or print name of applicant under signature)

before me this _____ day of _____,
20____.

_____
(Notary Public)

of _____

My commission expires: _____, 20____.

Construction of Gateway "Welcome to Winchester" Signs
ITB# 201910

CONTRACT

THIS CONTRACT, made and entered into in triplicate originals this _____ day of _____**, 2019**, by and between the **City of Winchester, Virginia**, Party of the First Part, hereinafter referred to as the **"Owner"** and _____, Party of the Second Part, hereinafter referred to as the **"Contractor"**.

WITNESSETH, That the Contractor and the City for the consideration stated herein agree as follows:

ARTICLE I, SCOPE OF WORK - The Contractor shall perform everything required to be performed and shall provide and furnish all of the labor, materials, necessary tools, expendable equipment and all utility and transportation services required to perform and complete in a workmanlike manner all the work required in connection with:

ITB# 201910 Construction of Gateway "Welcome to Winchester" Signs

all in strict accordance with the Contract Documents prepared by the Public Services Department, City of Winchester, Virginia. The Contractor shall do everything required by this Contract and other Documents constituting a part thereof.

ARTICLE II, CONTRACT PRICE - The City shall pay to the Contractor for the performance of this Contract, subject to any additions or deductions provided therein, in current funds, the Contract Price computed as follows:

TOTAL CONTRACT PRICE= _____

ARTICLE III. PAYMENTS - Payments are to be made to the Contractor in accordance with and subject to provisions embodied in the Documents made a part of this Contract.

ARTICLE IV. CONTRACT TIME - Work under this Contract shall commence no later than the date to begin work set forth in a written Notice to Proceed from the City or its authorized representative, to the Contractor. The Contractor shall complete all work under this Contract within **180 calendar days** following the Notice to Proceed issued for the project.

The Work shall be prosecuted (performed) regularly, diligently and uninterruptedly at such rate of progress as will insure full completion thereof within the time specified. **It is expressly understood and agreed by and between the Contractor and the City that the time for the completion of the Work described herein is a reasonable time for**

the completion of the same.

ARTICLE V. ENGINEER – The project has been designed by the City of Winchester Public Services Department, Engineering Division, 15 N. Cameron Street, Winchester, VA 22601, who is hereinafter called ENGINEER and who is to act as OWNER's representative, assume all duties and responsibilities and have the rights and authority assigned to ENGINEER in the Contract Documents in connection with completion of the Work in accordance with the Contract Documents.

ARTICLE VI. HOLD HARMLESS CLAUSE - Bids shall provide that during the term of the Contract, including warranty period, for the successful bidder indemnifying, defending, and holding harmless the City, its officers, employees, agent and representatives thereof from all suits, actions, claims of any kind, including attorney's fees, brought on account of any personal injuries, damages, or violation of rights sustained by any person or property in consequence of any neglect in safeguarding contract work, or on account of any act or omission by the Contractor or his employees, or from any claims or amounts arising from violation of any law, bylaw, ordinance, regulation or decree. The Contractor agrees that this clause shall include claims involving infringement of patent or copyrights.

ARTICLE VII. LIQUIDATED DAMAGES AND INCENTIVES - **It is hereby fully understood and agreed that the time is of essence in the performance of this Contract**. For each and every calendar day that elapses between the Contract Completion Dates specified in Article IV of this Contract and the date on which the work covered by such Contract is actually completed, including the removal of all plant and obstructions from the site of such work, the Contractor shall pay to the City as liquidated damages and not as a penalty, the sum of SEVEN HUNDRED FIFTY DOLLARS PER CALENDAR DAY ($750.00). The total amount so payable by the Contractor as liquidated damages either may be deducted from any moneys due or payable to the Contractor by the City or so much thereof as is not so deducted shall be chargeable to and will be payable promptly by such Contractor and his Surety, or either of them, to the City. Such liquidated damages shall be payable to reimburse or compensate, at least in part, the City for (1) the administration of the work covered by such Contract and any other contract or contracts beyond the Contract Completion Date, including the additional expense to the City for supervision, inspection, and superintendence; (2) expenditures resulting from the inability of the City (and the general public) to use the improvement being constructed from and after such Contract Completion Date until the actual date of completion; (3) other miscellaneous obligations and expenditures incurred by the City directly as a result of the failure to complete the Work covered by such Contract on or before the Contract Completion Date.

ARTICLE VIII. COMPONENT PARTS OF THIS CONTRACT - That this Contract consists of the following component parts which are made a part of this agreement and Contract as fully and absolutely as if they were set out in detail in this Contract:

BIDDING DOCUMENTS

- Invitation to Bid
- Instructions to Bidders
- Bid Form
- Bid Bond
- Non-Collusion Affidavit
- Contract
- Performance Bond
- Labor and Material Payment Bond
- Notice of Intent to Award
- Notice of Award
- Notice to Proceed
- City of Winchester Required General Terms and Conditions
- General Conditions
- Supplement to General Conditions
- Special Terms and Conditions

TECHNICAL SPECIFICATIONS

- Scope of Work
- Traffic Control
- Welcome to Winchester Sign

DRAWINGS

ADDENDA:

Above components are complimentary and what is called for by one shall be binding as if called by all.

IN WITNESS WHEREOF, the parties hereto have hereunto set their hands and seals the date first written above.

CONTRACTOR:	CITY OF WINCHESTER, VIRGINIA:
_____	_____ CITY MANAGER
_____ NAME AND TITLE	_____ ATTEST
_____ ATTEST	

PERFORMANCE BOND

KNOW ALL MEN BY THESE PRESENTS, that we_____

_____as Principal, hereinafter

called Contractor, and _____

Surety Company, with General Offices in _____

_____, a corporation organized under the laws of the State of _____ and authorized to transact business in the State of Virginia as Surety, hereinafter called Surety, are held and firmly bound onto the City of Winchester, Virginia, hereinafter called Owner, in the penal sum _____

(_____)Dollars, lawful money of the United States, for the payment of which sum, will and truly be made, the Said Contractor and Surety bind themselves, their successors and assigns, jointly and severally, firmly by these presents.

Signed, sealed and delivered this_____day of _____, 2019.

WHEREAS, the above named and bounded Contractor has entered into a written contract with the Owner, dated_____, 2019 for:

ITB# 201910 – Construction of Gateway "Welcome to Winchester" Signs

in accordance with the Drawings and Specifications prepared by the Engineering Department, City of Winchester, Virginia, which Contract is by reference made a part hereof, and is hereinafter referred to as the Contract.

NOW, THEREFORE, THE CONDITION OF THIS OBLIGATION is such that, if the Contractor shall promptly and faithfully perform said Contract, then this obligation shall be null and void; otherwise it shall remain in full force and effect.

The Surety hereby waives notice of any alteration or extension of time made by the Owner.

Whenever Contractor shall be, and declared by Owner to be in default under the Contract, the Owner having performed Owner's obligations thereunder, the Surety may promptly remedy the default, or shall promptly:

1. Complete the Contract in accordance with its terms and conditions, or

2. Obtain a bid or bids for completing the Contract in accordance with its terms and conditions, and upon determination by Surety of the lowest responsible bidder, or, if the Owner elects, upon determination by the Owner and the Surety jointly of the lowest responsible bidder, arrange for a contract between such bidder and Owner, and make available as work progresses (even though there should be a default or a succession of defaults under the contract or contracts of completion arranged under this paragraph) sufficient funds to pay the cost of completion less the balance of the contract price; but not exceeding, including other costs and damages for which Surety may be liable hereunder, the amount set forth in the first paragraph hereof. The term "balance of contract price," as used in this paragraph, shall mean the total amount payable by the Owner to Contractor under the Contract and any amendments thereto, less the amount properly paid by Owner to Contractor.

Any suit under this bond must be instituted before the expiration of two (2) years from the date on which final payment under the Contract falls due.

No right of action shall accrue on this bond to or for the use of any person or corporation other than the Owner named herein or the heirs, executors, administrators or successors of the Owner.

Signed and sealed this _____day of_____ 2019.

_____	_____
PRINCIPAL	SURETY
_____	_____
TITLE	TITLE
_____	_____
WITNESS	WITNESS

LABOR AND MATERIAL PAYMENT BOND

KNOW ALL MEN BY THESE PRESENTS, that we _____

_____as Principal, hereinafter

called Contractor, and _____

Surety Company, with General Offices in _____

_____, a corporation organized under the laws of the State of _____ and authorized to transact business in the State of Virginia as Surety, hereinafter called Surety, are held and firmly bound unto the City of Winchester, Virginia, hereinafter called Owner, in the penal sum _____

(_____)Dollars, lawful money of the United States, for the payment of which sum, will and truly be made, the Said Contractor and Surety bind themselves, their successors and assigns, jointly and severally, firmly by these presents.

Signed, sealed and delivered this _____day of_____ 2019.
WHEREAS, the above named and bounded Contractor has entered into a written contract

with the Owner, dated_____, 2019 for:

ITB# 201910 – Construction of Gateway "Welcome to Winchester" Signs

in accordance with the Drawings and Specifications prepared by the Engineering Department, City of Winchester, Virginia, which Contract is by reference made a part hereof, and is hereinafter referred to as the Contract.

NOW, THEREFORE, THE CONDITION OF THIS OBLIGATION is such that, if the Contractor shall promptly make payment to all claimants as hereinafter defined, for all labor and material used or reasonably required for use in the performance of the Contract, then this obligation shall be void; otherwise it shall remain full force and effect, subject, however, to the following conditions:

1. A claimant is defined as one having a direct contract with the Principal or with a Subcontractor of the Principal for labor, material, or both, used or reasonably required for use in the performance of the Contract, labor and material being construed to include that part of water, gas, power, light, heat, oil, gasoline, telephone service or rental of equipment directly applicable to the Contract.

2. The above named Principal and Surety hereby jointly and severally agree with the Owner that every claimant as herein defined, who has not been paid in full before

the expiration of a period of ninety (90) days after the date on which the last of such claimant's work or labor was done or performed, or materials were furnished by such claimant, may sue on this bond for the use of such claimant, prosecute the suit to final judgement for such sum or sums as my be justly due claimant, and have execution thereon. The Owner shall not be liable for the payment of any costs or expenses of any such suit.

3. No suit or action shall be commenced hereunder by any claimant:

a) Unless claimant, other than the one having a direct Contract with the Principal, shall have given written notice to any two of the following: the Principal, the Owner, or the Surety above named, within (90) days after such claimant did or performed the last of the work or labor, or furnished the last of the materials for which said claim is made, stating with substantial accuracy the amount claimed and the name of the party to whom the materials were furnished, or for whom the work or labor was done or performed. Such notice shall be served by mailing the same by registered mail or certified mail, postage paid, in an envelope addressed to the Principal, Owner or Surety, at any place where an office is regularly maintained for the transaction of business, or served in any manner in which legal process may be served in the state in which the aforesaid project is located, save that such service need not be made by a public officer.

b) After the expiration of one (1) year following the date on which Principal ceased work on said Contract, it being understood, however, that if any limitation embodied in this bond is prohibited by any law controlling the construction hereof such limitation shall be deemed to be amended so as to be equal to the minimum period of limitation permitted by such law.

c) Other than in a state court of competent jurisdiction in and for the county or other political subdivision of the state in which the project, or any part thereof, is situated, or in the United States District Court for the district in which the project, or any part thereof, is situated, and not elsewhere.

4. The amount of this bond shall be reduced by and to the extent of any payment or payments made in good faith hereunder, inclusive of the payment by Surety of mechanic's liens which may by be filed of record against said improvement, whether or not claim for the amount of such lien be presented under and against this bond.

Signed and sealed this _____day of_____, 2019.

_____
PRINCIPAL

_____
TITLE

_____
WITNESS

_____
SURETY

_____
TITLE

_____
WITNESS

CITY OF WINCHESTER, VIRGINIA

NOTICE OF INTENT TO AWARD

Date:

To:

Thank you for your proposal concerning our Invitation to Bid For: **Construction of Gateway "Welcome to Winchester" Signs; ITB #201910.**

The City of Winchester intends to award this Invitation to Bid to:

This is not a Notice of Award or a Notice to Proceed.

Sincerely,

Michael Marzullo, CPPB
City of Winchester
Purchasing
Finance Department
15 N. Cameron Street
Winchester, VA 22601
(540) 667-1815 EXT 1477

NOTICE OF AWARD

DATE:

TO:

PROJECT TITLE: ITB# 201910 – Construction of Gateway "Welcome to Winchester" Signs

Gentlemen:

Your Bid, dated _____, for the above Project has been considered and you are the apparent successful bidder. You are hereby notified that you have been awarded a Contract for:

The Contract Price of your contract is $_____.

Three copies each of the proposed Contract between Owner and Contractor and the Contract Documents accompany this Notice of Award.

You must comply with the following conditions precedent within fifteen days of the date

of this Notice of Award, that is by _____.

1. You must deliver to the Owner three (3) fully executed counterparts of the Contract between Owner and Contractor including all the Contract Documents. This includes the sets of Plans and Specifications. Each of the Contract Documents must bear your signature on the Index page of the Plans and on the Specification Table of Contents page.
2. You must deliver with the executed Contract, Payment and Performance Bonds, and required Certificates of Insurance. The Certificate of Insurance must identify the above referenced project as the project for which insurance is being provided. *Additionally, it must indicate the City of Winchester as the Certificate Holder, and name the City of Winchester as an additional insured.*

Failure to comply with these conditions within the time specified will entitle Owner to consider your bid abandoned, to annul this Notice of Award and to declare your Bid Security forfeited.

After you comply with those conditions, and upon approval of the Contract Security by the Owner, the Owner will return to you one fully signed counterpart of the Contract with the Contract Documents.

City of Winchester, Virginia

By: _____
City Manager

NOTICE TO PROCEED

DATE:

TO:

Re: City of Winchester, Department of Public Services

PROJECT TITLE: ITB# 201910 – Construction of Gateway "Welcome to Winchester" Signs

Gentlemen:

In accordance with the Contract between Owner and Contractor, you are notified that the Time for Completion under the above Contract will commence to run on _____, 2019. By that date, you are to start performing your obligations under the Contract Documents. In accordance with the Contract between Owner and Contractor, the Work shall be substantially completed within 180 calendar days which is _____, 2019.

City of Winchester, Virginia

By: _____
Public Services Director

CITY OF WINCHESTER

REQUIRED GENERAL TERMS AND CONDITIONS

A. APPLICABLE LAWS AND COURTS
B. ANTI-DISCRIMINATION
C. ETHICS IN PUBLIC CONTRACTING
E. IMMIGRATION REFORM AND CONTROL ACT OF 1986
F. DEBARMENT STATUS
G. ANTITRUST
H. MANDATORY USE OF CITY FORM AND TERMS AND CONDITIONS
I. CLARIFICATION OF TERMS
J. PAYMENT
K. PRECEDENCE OF TERMS
L. QUALIFICATIONS OF BIDDERS OR OFFERORS
M. TESTING AND INSPECTION
N. ASSIGNMENT OF CONTRACT
O. SEVERABILITY
P. CHANGES TO THE CONTRACT
Q. DEFAULT
R. TAXES
S. USE OF BRAND NAMES
T. TRANSPORTATION AND PACKAGING
U. INSURANCE
V. ANNOUNCEMENT OF AWARD
W. DRUG-FREE WORKPLACE
X. NONDISCRIMINATION OF CONTRACTORS
Y. AVAILABILITY OF FUNDS
Z. LICENSES AND PERMITS
AZ. TERMINATION
BZ. HOLD HARMLESS INDEMNIFICATION
CZ. CONFIDENTIALITY OF PERSONALLY IDENTIFIABLE INFORMATION
DZ. BID PRICE CURRENCY

These General Terms and Conditions are required for all sealed and unsealed written or verbal solicitations issued by the City of Winchester for procurements that are subject to the Winchester City Code unless changed, deleted or revised by the City Attorney.

A. **APPLICABLE LAWS AND COURTS:** This solicitation and any resulting contract shall be governed by the laws of the Commonwealth of Virginia. Any dispute arising from the performance or non-performance of this Agreement shall be resolved or otherwise litigated in the Circuit Court for the City of Winchester, Virginia or the Fourth Circuit Federal District Court in Harrisonburg, Virginia. The agency and the contractor are encouraged to resolve any issues in controversy arising from the award of the contract or any contractual dispute following the Winchester City Code, Chapter 21-61. The contractor shall comply with all applicable federal, state and local laws, rules and regulations.

B. **ANTI-DISCRIMINATION:** By submitting their (bids/proposals), (bidders/offerors) certify to the City of Winchester that they will conform to the provisions of the Federal Civil Rights Act of 1964, as amended, as well as the Virginia Fair Employment Contracting Act of 1975, as amended, where applicable, the Virginians With Disabilities Act, the Americans With Disabilities Act and § 2.2-4311 of the *Virginia Public Procurement Act (VPPA).* If the award is made to a faith-based organization, the organization shall not discriminate against any recipient of goods, services, or disbursements made pursuant to the contract on the basis of the recipient's religion, religious belief, refusal to participate in a religious practice, or on the basis of race, age, color, gender or national origin and shall be subject to the same rules as other organizations that contract with public bodies to account for the use of the funds provided; however, if the faith-based organization segregates public funds into separate accounts, only the accounts and programs funded with public funds shall be subject to audit by the public body. (*Code of Virginia*, § 2.2-4343.1E).

In every contract over $10,000 the provisions in 1. and 2. below apply:

1. During the performance of this contract, the contractor agrees as follows:

a. The contractor will not discriminate against any employee or applicant for employment because of race, religion, color, sex, national origin, age, disability, or any other basis prohibited by state law relating to discrimination in employment, except where there is a bona fide occupational qualification reasonably necessary to the normal operation of the contractor. The contractor agrees to post in conspicuous places, available to employees and applicants for employment, notices setting forth the provisions of this nondiscrimination clause.

b. The contractor, in all solicitations or advertisements for employees placed by or on behalf of the contractor, will state that such contractor is an equal opportunity employer.

c. Notices, advertisements and solicitations placed in accordance with federal law, rule or regulation shall be deemed sufficient for the purpose of meeting these requirements.

2. The contractor will include the provisions of 1. above in every subcontract or purchase order over $10,000, so that the provisions will be binding upon each subcontractor or vendor.

C. **ETHICS IN PUBLIC CONTRACTING:** By submitting their (bids/proposals), (bidders/offerors) certify that their (bids/proposals) are made without collusion or fraud and that they have not offered or received any kickbacks or inducements from any other (bidder/offeror), supplier, manufacturer or subcontractor in connection with their (bid/proposal), and that they have not conferred on any public employee having official responsibility for this procurement transaction any payment, loan, subscription, advance, deposit of money, services or anything of more than nominal value, present or promised, unless consideration of substantially equal or greater value was exchanged.

D. **IMMIGRATION REFORM AND CONTROL ACT OF 1986:** By submitting their (bids/proposals), (bidders/offerors) certify that they do not and will not during the performance of this contract employ illegal alien workers or otherwise violate the provisions of the federal Immigration Reform and Control Act of 1986.

E. **DEBARMENT STATUS:** By submitting their (bids/proposals), (bidders/offerors) certify that they are not currently debarred by the Federal Government, Commonwealth of Virginia, or by any City, Town or County from submitting bids or proposals on contracts for the type of goods and/or services covered by this solicitation, nor are they an agent of any person or entity that is currently so debarred.

F. **ANTITRUST:** By entering into a contract, the contractor conveys, sells, assigns, and transfers to the City of Winchester all rights, title and interest in and to all causes of action it may now have or hereafter acquire under the antitrust laws of the United States and the Commonwealth of Virginia, relating to the particular goods or services purchased or acquired by the City of Winchester under said contract.

H. **MANDATORY USE OF CITY FORM AND TERMS AND CONDITIONS:** Failure to submit a bid/proposal on the official City form provided for that purpose may be a cause for rejection of the bid/proposal. Modification of or additions to the General Terms and Conditions of the solicitation may be cause for rejection of the bid/proposal; however, the City of Winchester reserves the right to decide, on a case by case basis, in its sole discretion, whether to reject such a bid/proposal.

I. **CLARIFICATION OF TERMS:** If any prospective (bidder/offeror) has questions about the specifications or other solicitation documents, the prospective (bidder/offeror) should contact the buyer whose name appears on the face of the solicitation no later than five working days before the due date. Any revisions to the solicitation will be made only by addendum issued by the Purchasing Agent, or designee.

J. **PAYMENT:**

1. To Prime Contractor:

a. Invoices for items ordered, delivered and accepted shall be submitted by the contractor directly to the payment address shown on the purchase order/contract. All invoices shall show the state contract number and/or purchase order number; social security number (for individual contractors) or the federal employer identification number (for proprietorships, partnerships, and corporations).

b. Any payment terms requiring payment in less than 30 days will be regarded as requiring payment 30 days after invoice or delivery, whichever occurs last. This shall not affect offers of discounts for payment in less than 30 days, however.

c. All goods or services provided under this contract or purchase order, that are to be paid for with public funds, shall be billed by the contractor at the contract price, regardless of which department is being billed.

d. The following shall be deemed to be the date of payment: the date of postmark in all cases where payment is made by mail.

e. **Unreasonable Charges**. Under certain emergency procurements and for most time and material purchases, final job costs cannot be accurately determined at the time orders are placed. In such cases, contractors should be put on notice that final payment in full is contingent on a determination of reasonableness with respect to all invoiced charges. Charges which appear to be unreasonable will be researched and challenged, and that portion of the invoice held in abeyance until a settlement can be reached. Upon determining that invoiced charges are not reasonable, the City of Winchester shall promptly notify the contractor, in writing, as to those charges which it considers unreasonable and the basis for the determination. A contractor may not institute legal action unless a settlement cannot be reached within thirty (30) days of notification. The provisions of this section do not relieve an agency of its prompt payment obligations with respect to those charges which are not in dispute (*Code of Virginia*, § 2.2-4363).

2. To Subcontractors:

a. A contractor awarded a contract under this solicitation is hereby obligated:

(1) To pay the subcontractor(s) within seven (7) days of the contractor's receipt of payment from the City of Winchester for the proportionate share of the payment received for work performed by the subcontractor(s) under the contract; or

(2) To notify the agency and the subcontractor(s), in writing, of the contractor's intention to withhold payment and the reason.

b. The contractor is obligated to pay the subcontractor(s) interest at the rate of one percent per month (unless otherwise provided under the terms of the contract) on all amounts owed by the contractor that remain unpaid seven (7) days following receipt of payment from the City of Winchester, except for amounts withheld as stated in (2) above. The date of mailing of any payment by U. S. Mail is deemed to be payment to the addressee. These provisions apply to each sub-tier contractor performing under the primary contract. A contractor's obligation to pay an interest charge to a subcontractor may not be construed to be an obligation of the City of Winchester.

K. **PRECEDENCE OF TERMS:** The following General Terms and Conditions APPLICABLE LAWS AND COURTS, ANTI-DISCRIMINATION, ETHICS IN PUBLIC CONTRACTING, IMMIGRATION REFORM AND CONTROL ACT OF 1986, DEBARMENT STATUS, ANTITRUST, MANDATORY USE OF CITY FORM AND TERMS AND CONDITIONS, CLARIFICATION OF TERMS, PAYMENT shall apply in all instances. In the event there is a conflict between any of the other General Terms and Conditions and any Special Terms and Conditions in this solicitation, the Special Terms and Conditions shall apply and take precedence.

The City's procurement, Contractor's response and written negotiation summary shall form part of the Contract. In the case of conflicts, discrepancies, errors or omissions among the City's procurement, the Contractor's response, written negotiation summary and the main body of the Contract, the documents and amendments to them shall take precedence and govern in the following order:

1. Contract
2. Negotiation Summary
3. City's Procurement Document(s)
4. Contractor's Response
5. Other Documents

L. **QUALIFICATIONS OF (BIDDERS/OFFERORS):** The City of Winchester may make such reasonable investigations as deemed proper and necessary to determine the ability of the (bidder/offeror) to perform the services/furnish the goods and the (bidder/offeror) shall furnish to the City of Winchester all such information and data for this purpose as may be requested. The City of Winchester reserves the right to inspect (bidder's/offeror's) physical facilities prior to award to satisfy questions regarding the (bidder's/offeror's) capabilities. The City of Winchester further reserves the right to reject any (bid/proposal) if the evidence submitted by, or investigations of, such (bidder/offeror) fails to satisfy the City of Winchester that such (bidder/offeror) is properly qualified to carry out the obligations of the contract and to provide the services and/or furnish the goods contemplated therein.

M. **TESTING AND INSPECTION:** The City of Winchester reserves the right to conduct any test/inspection it may deem advisable to assure goods and services conform to the specifications.

N. **ASSIGNMENT OF CONTRACT:** A contract shall not be assignable by the contractor in whole or in part without the written consent of the City of Winchester.

O. **SEVERABILITY OF CONTRACT:** In the event that any provision shall be adjudged or decreed to be invalid, such ruling shall not invalidate the entire Agreement but shall pertain only to the provision in question and the remaining provisions shall continue to be valid, binding and in full force and effect.

P. **CHANGES TO THE CONTRACT:**

1. A public contract may include provisions for modification of the contract during performance, but no fixed-price contract may be increased by more than twenty-five percent of the amount of the contract or ten thousand dollars ($10,000), whichever is greater, without the advance written approval of the City Council. In no event may the amount of any contract, without adequate consideration, be increased for any purpose, including, but not limited to, relief of an offeror from the consequences of an error in its bid or offer (Winchester City Code 21-44).

2. Changes can be made to the contract in any of the following ways:

   a. The parties may agree in writing to modify the scope of the contract. An increase or decrease in the price of the contract resulting from such modification shall be agreed to by the parties as a part of their written agreement to modify the scope of the contract.

   b. The City of Winchester may order changes within the general scope of the contract at any time by written notice to the contractor. Changes within the scope of the contract include, but are not limited to, things such as services to be performed, the method of packing or shipment, and the place of delivery or installation. The contractor shall comply with the notice upon receipt. The contractor shall be compensated for any additional costs incurred as the result of such order and shall give the City of Winchester a credit for any savings. Said compensation shall be determined by one of the following methods:

      1. By mutual agreement between the parties in writing; or
      2. By agreeing upon a unit price or using a unit price set forth in the contract, if the work to be done can be expressed in units, and the contractor accounts for the number of units of work performed, subject to the City of Winchester's right to audit the contractor's records and/or to determine the correct number of units independently; or
      3. By ordering the contractor to proceed with the work and keep a record of all costs incurred and savings realized. A markup for overhead and profit may be allowed if provided by the contract. The same markup shall be used for determining a decrease in price as the result of savings realized. The contractor shall present the City of Winchester with all vouchers and records of expenses incurred and savings realized. The City of Winchester shall have the right to audit the records of the contractor as it deems necessary to determine costs or savings. Any claim for an adjustment in price under this provision must be asserted by written notice to the City of Winchester within thirty (30) days from the date of receipt of the written order from the City of Winchester. If the parties fail to agree on an amount of adjustment, the question of an increase or decrease in the contract price or time for performance shall be resolved in accordance with the procedures for resolving disputes provided by the Disputes Clause of this contract or, if there is none, in accordance with the disputes provisions of the City of Winchester Code. Neither the existence of a claim nor a dispute resolution process, litigation or any other provision of this contract shall excuse the contractor from promptly complying with the changes ordered by the City of Winchester or with the performance of the contract generally.

Q. **DEFAULT:** In case of failure to deliver goods or services in accordance with the contract terms and conditions, the City of Winchester, after due oral or written notice, may procure them from other sources and hold the contractor responsible for any resulting additional purchase and administrative costs. This remedy shall be in addition to any other remedies which the City of Winchester may have.

R. **TAXES:** Sales to the City of Winchester are normally exempt from State sales tax. State sales and use tax certificates of exemption, Form ST-12, will be issued upon request.

S. **USE OF BRAND NAMES:** Unless otherwise provided in this solicitation, the name of a certain brand, make or manufacturer does not restrict (bidders/offerors) to the specific brand, make or manufacturer named, but conveys the general style, type, character, and quality of the article desired. Any article which the public body, in its sole discretion, determines to be the equal of that specified, considering quality, workmanship, economy of operation, and suitability for the purpose intended, shall be accepted. The (bidder/offeror) is responsible to clearly and specifically identify the product being offered and to provide sufficient descriptive literature, catalog cuts and technical detail to enable the City of Winchester to determine if the product offered meets the requirements of the solicitation. This is required even if offering the exact brand, make or manufacturer specified. Normally in competitive sealed bidding only the information furnished with the bid will be considered in the evaluation. Failure to furnish adequate data for evaluation purposes may result in declaring a bid nonresponsive. Unless the (bidder/offeror) clearly indicates in its (bid/proposal) that the product offered is an equal product, such (bid/proposal) will be considered to offer the brand name product referenced in the solicitation.

T. **TRANSPORTATION AND PACKAGING:** By submitting their (bids/proposals), all (bidders/offerors) certify and warrant that the price offered for FOB destination includes only the actual freight rate costs at the lowest and best rate and is based upon the actual weight of the goods to be shipped. Except as otherwise specified herein, standard commercial packaging, packing and shipping containers shall be used. All shipping containers shall be legibly marked or labeled on the outside with purchase order number, commodity description, and quantity.

U. INSURANCE: By signing and submitting a bid or proposal under this solicitation, the bidder or offeror certifies that if awarded the contract, it will have the following insurance coverage at the time the contract is awarded. For construction contracts, if any subcontractors are involved, the subcontractor will have workers' compensation insurance in accordance with §§ 2.2-4332 and 65.2-800 et seq. of the *Code of Virginia*. The bidder or offeror further certifies that the contractor and any subcontractors will maintain these insurance coverage during the entire term of the contract and that all insurance coverage will be provided by insurance companies authorized to sell insurance in Virginia by the Virginia State Corporation Commission.

MINIMUM INSURANCE COVERAGES AND LIMITS REQUIRED FOR MOST CONTRACTS:

1. Workers' Compensation - Statutory requirements and benefits. Coverage is compulsory for employers of three or more employees, to include the employer. Contractors who fail to notify the City of Winchester of increases in the number of employees that change their workers' compensation requirements under the *Code of Virginia* during the course of the contract shall be in noncompliance with the contract. The insurer must have an A.M. Best rating of A- or better.

2. Employer's Liability - $100,000.

3. Commercial General Liability - $1,000,000 per occurrence. Commercial General Liability is to include bodily injury and property damage, personal injury and advertising injury, products and completed operations coverage. The City of Winchester must be named as an additional insured and so endorsed on the policy by the insurer. A notation on the certificate of insurance is not sufficient.

4. Automobile Liability - $1,000,000 per occurrence. (Only used if motor vehicle is to be used in the contract.)

NOTE: In addition, various Professional Liability/Errors and Omissions coverages are required when soliciting those services as follows:

Profession/Service	**Limits**
Accounting	$1,000,000 per occurrence, $3,000,000 aggregate
Architecture	$2,000,000 per occurrence, $6,000,000 aggregate
Asbestos Design, Inspection or Abatement Contractors	$1,000,000 per occurrence, $3,000,000 aggregate
Health Care Practitioner (to include Dentists, Licensed Dental Hygienists, Optometrists, Registered or Licensed Practical Nurses, Pharmacists, Physicians, Podiatrists, Chiropractors, Physical Therapists, Physical Therapist Assistants, Clinical Psychologists, Clinical Social Workers, Professional Counselors, Hospitals, or Health Maintenance Organizations.)	$1,925,000 per occurrence, $3,000,000 aggregate

(Limits increase each July 1 through fiscal year 2008, as follows:

July 1, 2008 - $2,000,000. This complies with §8.01-581.15 of the *Code of Virginia*.

Insurance/Risk Management	$1,000,000 per occurrence, $3,000,000 aggregate
Landscape/Architecture	$1,000,000 per occurrence, $1,000,000 aggregate
Legal	$1,000,000 per occurrence, $5,000,000 aggregate
Professional Engineer	$2,000,000 per occurrence, $6,000,000 aggregate
Surveying	$1,000,000 per occurrence, $1,000,000 aggregate

V. **ANNOUNCEMENT OF AWARD:** Upon the award or the announcement of the decision to award a contract over $50,000, as a result of this solicitation, the Purchasing Agent will publicly post such notice on the City of Winchester's web site (www.winchesterva.gov/purchasing) for a minimum of 10 days.

W. **DRUG-FREE WORKPLACE:** During the performance of this contract, the contractor agrees to (i) provide a drug-free workplace for the contractor's employees; (ii) post in conspicuous places, available to employees and applicants for employment, a statement notifying employees that the unlawful manufacture, sale, distribution, dispensation, possession, or use of a controlled substance or marijuana is prohibited in the contractor's workplace and specifying the actions that will be taken against employees for violations of such prohibition; (iii) state in all solicitations or advertisements for employees placed by or on behalf of the contractor that the contractor maintains a drug-free workplace; and (iv) include the provisions of the foregoing clauses in every subcontract or purchase order of over $10,000, so that the provisions will be binding upon each subcontractor or vendor.

For the purposes of this section, "*drug-free workplace*" means a site for the performance of work done in connection with a specific contract awarded to a contractor, the employees of whom are prohibited from engaging in the unlawful manufacture, sale, distribution, dispensation, possession or use of any controlled substance or marijuana during the performance of the contract.

X. **NONDISCRIMINATION OF CONTRACTORS**: A bidder, offeror, or contractor shall not be discriminated against in the solicitation or award of this contract because of race, religion, color, sex, national origin, age, disability, faith-based organizational status, any other basis prohibited by state law relating to discrimination in employment or because the bidder or offeror employs ex-offenders unless the state agency, department or institution has made a written determination that employing ex-offenders on the specific contract is not in its best interest. If the award of this contract is made to a faith-based organization and an individual, who applies for or receives goods, services, or disbursements provided pursuant to this contract objects to the religious character of the faith-based organization from which the individual receives or would receive the goods, services, or disbursements, the public body shall offer the individual, within a reasonable period of time after the date of his objection, access to equivalent goods, services, or disbursements from an alternative provider.

Y. **AVAILABILITY OF FUNDS:** In the event that funds are not appropriated for this Contract for any City fiscal year, following the City's current year, the Contract shall terminate automatically as of the last day for which funds were appropriated without the City providing written notice to the Contractor prior to the date of termination. The City shall not consider termination of the Contract pursuant to this section default. Upon such termination, the City shall be released from any obligation to make future payments and shall not be liable for cancellation or termination charges.

Z. **LICENSES AND PERMITS:** Contractors will be responsible for all licenses and permits, if required. Any person, firm, or corporation responding to the City's procurement which is required to have a current and valid City of Winchester business license and, in fact, does not, will not be considered a "responsive bidder" as such term is defined by the Code of Virginia §2.2-4301, as amended. Any bid received from such an entity may be rejected, at the City's sole option, for that reason alone. In addition, the successful bidder or offeror will be required to produce affirmative evidence, satisfactory to the Purchasing Agent, or designee that it has such a license, or is not required to have such a license, prior to approval and execution of any contract to perform the work herein described.

AZ **TERMINATION:**

a. Termination for Convenience: The City of Winchester may terminate a contract, in whole or in part, whenever the City OF Winchester determines that such termination is in the best interest of the City of Winchester, without showing cause, upon giving ten (10) days written notice to the vendor.
b. Termination for Default: When the vendor has not performed or has unsatisfactorily performed the contract, the City of Winchester may terminate the contract for default. Upon termination for default, payment may be withheld at the discretion of the City of Winchester. The Vendor will be paid for work satisfactorily performed prior to termination.

BZ **HOLD HARMLESS:** Bids/Proposal shall provide that during the term of the contract, including warranty period, for the successful bidder/offeror indemnifying, defending, and holding harmless the City, its officers, employees, agent and representatives thereof from all suits, actions, claims of any kind (including claims for attorney's fees) brought on account of any personal injuries, damages, or violation of rights sustained by any person or property in consequence of any neglect in safeguarding contract work, or on account of any act or omission by the contractor or his employees, or from any claims or amounts arising from violation of any law, bylaw, ordinance, regulation or decree. The vendor agrees that this clause shall include claims involving infringement of patent or copyrights.

CZ**.** **CONFIDENTIALITY OF PERSONALLY IDENTIFIABLE INFORMATION:** The contractor assures that information and data obtained as to personal facts and circumstances related to patients or clients will be collected and held confidential, during and following the term of this agreement, and will not be divulged without the individual's and the agency's written consent and only in accordance with federal law or the Code of Virginia. Contractors who utilize, access, or store personally identifiably information as part of the performance of a contract are required to safeguard this information and immediately notify the agency of any breach or suspected breach in the security of such information. Contractors shall allow the City to both participate in the investigation of incidents and exercise control over decisions regarding external reporting. Contractors and their employees working on this project may be required to sign a confidentiality statement.

DZ**.** **BID PRICE CURRENCY:** Prices are to be stated in US dollars unless otherwise specified in the solicitation.

This document has important legal consequences; consultation with an attorney is encouraged with respect to its use or modification. This document should be adapted to the particular circumstances of the contemplated Project and the Controlling Law.

STANDARD GENERAL CONDITIONS OF THE CONSTRUCTION CONTRACT

Prepared by

ENGINEERS JOINT CONTRACT DOCUMENTS COMMITTEE

and

Issued and Published Jointly By

PROFESSIONAL ENGINEERS IN PRIVATE PRACTICE
a practice division of the
NATIONAL SOCIETY OF PROFESSIONAL ENGINEERS

AMERICAN COUNCIL OF ENGINEERING COMPANIES

AMERICAN SOCIETY OF CIVIL ENGINEERS

This document has been approved and endorsed by

The Associated General Contractors of America

Construction Specifications Institute

EJCDC C-700 Standard General Conditions of the Construction Contract.
Copyright © 2002 National Society of Professional Engineers for EJCDC. All rights reserved.
00700 - 1

Copyright ©2002

National Society of Professional Engineers
1420 King Street, Alexandria, VA 22314

American Council of Engineering Companies
1015 15th Street, N.W., Washington, DC 20005

American Society of Civil Engineers
1801 Alexander Bell Drive, Reston, VA 20191-4400

These General Conditions have been prepared for use with the Suggested Forms of Agreement Between Owner and Contractor Nos. C-520 or C-525 (2002 Editions). Their provisions are interrelated and a change in one may necessitate a change in the other. Comments concerning their usage are contained in the EJCDC Construction Documents, General and Instructions (No. C-001) (2002 Edition). For guidance in the preparation of Supplementary Conditions, see Guide to the Preparation of Supplementary Conditions (No. C-800) (2002 Edition).

Copyright © 2002 National Society of Professional Engineers for EJCDC. All rights reserved.

TABLE OF CONTENTS

Page

ARTICLE 1 - DEFINITIONS AND TERMINOLOGY 6
1.01 *Defined Terms* 6
1.02 *Terminology* 8
ARTICLE 2 - PRELIMINARY MATTERS 9
2.01 *Delivery of Bonds and Evidence of Insurance* 9
2.02 *Copies of Documents* 9
2.03 *Commencement of Contract Times; Notice to Proceed* 10
2.04 *Starting the Work* 10
2.05 *Before Starting Construction* 10
2.06 *Preconstruction Conference* 10
2.07 *Initial Acceptance of Schedules* 10
ARTICLE 3 - CONTRACT DOCUMENTS: INTENT, AMENDING, REUSE 10
3.01 *Intent* 10
3.02 *Reference Standards* 11
3.03 *Reporting and Resolving Discrepancies* 11
3.04 *Amending and Supplementing Contract Documents* 11
3.05 *Reuse of Documents* 12
3.06 *Electronic Data* 12
ARTICLE 4 - AVAILABILITY OF LANDS; SUBSURFACE AND PHYSICAL CONDITIONS; HAZARDOUS ENVIRONMENTAL CONDITIONS; REFERENCE POINTS 12
4.01 *Availability of Lands* 12
4.02 *Subsurface and Physical Conditions* 12
4.03 *Differing Subsurface or Physical Conditions* 13
4.04 *Underground Facilities* 14
4.05 *Reference Points* 14
4.06 *Hazardous Environmental Condition at Site* 14
ARTICLE 5 - BONDS AND INSURANCE 16
5.01 *Performance, Payment, and Other Bonds* 16
5.02 *Licensed Sureties and Insurers* 16
5.03 *Certificates of Insurance* 16
5.04 *Contractor's Liability Insurance* 16
5.05 *Owner's Liability Insurance* 17
5.06 *Property Insurance* 17
5.07 *Waiver of Rights* 18
5.08 *Receipt and Application of Insurance Proceeds* 19
5.09 *Acceptance of Bonds and Insurance; Option to Replace* 19
5.10 *Partial Utilization, Acknowledgment of Property Insurer* 19
ARTICLE 6 - CONTRACTOR'S RESPONSIBILITIES 19
6.01 *Supervision and Superintendence* 19
6.02 *Labor; Working Hours* 20
6.03 *Services, Materials, and Equipment* 20
6.04 *Progress Schedule* 20
6.05 *Substitutes and "Or-Equals"* 20
6.06 *Concerning Subcontractors, Suppliers, and Others* 22
6.07 *Patent Fees and Royalties* 23
6.08 *Permits* 23
6.09 *Laws and Regulations* 23
6.10 *Taxes* 23

EJCDC C-700 Standard General Conditions of the Construction Contract.
Copyright © 2002 National Society of Professional Engineers for EJCDC. All rights reserved.

6.11 *Use of Site and Other Areas* 23
6.12 *Record Documents* 24
6.13 *Safety and Protection* 24
6.14 *Safety Representative* 25
6.15 *Hazard Communication Programs* 25
6.16 *Emergencies* 25
6.17 *Shop Drawings and Samples* 25
6.18 *Continuing the Work* 26
6.19 *Contractor's General Warranty and Guarantee* 26
6.20 *Indemnification* 27
6.21 *Delegation of Professional Design Services* 27
ARTICLE 7 - OTHER WORK AT THE SITE 28
7.01 *Related Work at Site* 28
7.02 *Coordination* 28
7.03 *Legal Relationships* 28
ARTICLE 8 - OWNER'S RESPONSIBILITIES 29
8.01 *Communications to Contractor* 29
8.02 *Replacement of Engineer* 29
8.03 *Furnish Data* 29
8.04 *Pay When Due* 29
8.05 *Lands and Easements; Reports and Tests* 29
8.06 *Insurance* 29
8.07 *Change Orders* 29
8.08 *Inspections, Tests, and Approvals* 29
8.09 *Limitations on Owner's Responsibilities* 29
8.10 *Undisclosed Hazardous Environmental Condition* 29
8.11 *Evidence of Financial Arrangements* 29
ARTICLE 9 - ENGINEER'S STATUS DURING CONSTRUCTION 29
9.01 *Owner's Representative* 29
9.02 *Visits to Site* 29
9.03 *Project Representative* 30
9.04 *Authorized Variations in Work* 30
9.05 *Rejecting Defective Work* 30
9.06 *Shop Drawings, Change Orders and Payments* 30
9.07 *Determinations for Unit Price Work* 30
9.08 *Decisions on Requirements of Contract Documents and Acceptability of Work* 30
9.09 *Limitations on Engineer's Authority and Responsibilities* 31
ARTICLE 10 - CHANGES IN THE WORK; CLAIMS 31
10.01 *Authorized Changes in the Work* 31
10.02 *Unauthorized Changes in the Work* 31
10.03 *Execution of Change Orders* 31
10.04 *Notification to Surety* 32
10.05 *Claims* 32
ARTICLE 11 - COST OF THE WORK; ALLOWANCES; UNIT PRICE WORK 32
11.01 *Cost of the Work* 32
11.02 *Allowances* 34
11.03 *Unit Price Work* 35
ARTICLE 12 - CHANGE OF CONTRACT PRICE; CHANGE OF CONTRACT TIMES 35
12.01 *Change of Contract Price* 35
12.02 *Change of Contract Times* 36
12.03 *Delays* 36
ARTICLE 13 - TESTS AND INSPECTIONS; CORRECTION, REMOVAL OR ACCEPTANCE OF DEFECTIVE WORK 36
13.01 *Notice of Defects* 36
13.02 *Access to Work* 36
13.03 *Tests and Inspections* 37
13.04 *Uncovering Work* 37

EJCDC C-700 Standard General Conditions of the Construction Contract.
Copyright © 2002 National Society of Professional Engineers for EJCDC. All rights reserved.

13.05 *Owner May Stop the Work* 37
13.06 *Correction or Removal of Defective Work* 37
13.07 *Correction Period* 38
13.08 *Acceptance of Defective Work* 38
13.09 *Owner May Correct Defective Work* 38
ARTICLE 14 - PAYMENTS TO CONTRACTOR AND COMPLETION 39
14.01 *Schedule of Values* 39
14.02 *Progress Payments* 39
14.03 *Contractor's Warranty of Title* 41
14.04 *Substantial Completion* 41
14.05 *Partial Utilization* 41
14.06 *Final Inspection* 42
14.07 *Final Payment* 42
14.08 *Final Completion Delayed* 43
14.09 *Waiver of Claims* 43
ARTICLE 15 - SUSPENSION OF WORK AND TERMINATION 43
15.01 *Owner May Suspend Work* 43
15.02 *Owner May Terminate for Cause* 43
15.03 *Owner May Terminate For Convenience* 44
15.04 *Contractor May Stop Work or Terminate* 44
ARTICLE 16 - DISPUTE RESOLUTION 45
16.01 *Methods and Procedures* 45
ARTICLE 17 - MISCELLANEOUS 45
17.01 *Giving Notice* 45
17.02 *Computation of Times* 45
17.03 *Cumulative Remedies* 45
17.04 *Survival of Obligations* 45
17.05 *Controlling Law* 46
17.06 *Headings* 46

EJCDC C-700 Standard General Conditions of the Construction Contract.
Copyright © 2002 National Society of Professional Engineers for EJCDC. All rights reserved.

GENERAL CONDITIONS

ARTICLE 1 - DEFINITIONS AND TERMINOLOGY

1.01 *Defined Terms*

A. Wherever used in the Bidding Requirements or Contract Documents and printed with initial capital letters, the terms listed below will have the meanings indicated which are applicable to both the singular and plural thereof. In addition to terms specifically defined, terms with initial capital letters in the Contract Documents include references to identified articles and paragraphs, and the titles of other documents or forms.

1. *Addenda*--Written or graphic instruments issued prior to the opening of Bids which clarify, correct, or change the Bidding Requirements or the proposed Contract Documents.

2. *Agreement*--The written instrument which is evidence of the agreement between Owner and Contractor covering the Work.

3. *Application for Payment*--The form acceptable to Engineer which is to be used by Contractor during the course of the Work in requesting progress or final payments and which is to be accompanied by such supporting documentation as is required by the Contract Documents.

4. *Asbestos*--Any material that contains more than one percent asbestos and is friable or is releasing asbestos fibers into the air above current action levels established by the United States Occupational Safety and Health Administration.

5. *Bid*--The offer or proposal of a Bidder submitted on the prescribed form setting forth the prices for the Work to be performed.

6. *Bidder*--The individual or entity who submits a Bid directly to Owner.

7. *Bidding Documents*--The Bidding Requirements and the proposed Contract Documents (including all Addenda).

8. *Bidding Requirements*--The Advertisement or Invitation to Bid, Instructions to Bidders, bid security of acceptable form, if any, and the Bid Form with any supplements.

9. *Change Order*--A document recommended by Engineer which is signed by Contractor and Owner and authorizes an addition, deletion, or revision in the Work or an adjustment in the Contract Price or the Contract Times, issued on or after the Effective Date of the Agreement.

10. *Claim*--A demand or assertion by Owner or Contractor seeking an adjustment of Contract Price or Contract Times, or both, or other relief with respect to the terms of the Contract. A demand for money or services by a third party is not a Claim.

11. *Contract*--The entire and integrated written agreement between the Owner and Contractor concerning the Work. The Contract supersedes prior negotiations, representations, or agreements, whether written or oral.

12. *Contract Documents*-- Those items so designated in the Agreement. Only printed or hard copies of the items listed in the Agreement are Contract Documents. Approved Shop Drawings, other Contractor's submittals, and the reports and drawings of subsurface and physical conditions are not Contract Documents.

13. *Contract Price*--The moneys payable by Owner to Contractor for completion of the Work in accordance with the Contract Documents as stated in the Agreement (subject to the provisions of Paragraph 11.03 in the case of Unit Price Work).

14. *Contract Times*--The number of days or the dates stated in the Agreement to: (i) achieve Milestones, if any, (ii) achieve Substantial Completion; and (iii) complete the Work so that it is ready for final payment as evidenced by Engineer's written recommendation of final payment.

15. *Contractor*--The individual or entity with whom Owner has entered into the Agreement.

16. *Cost of the Work*--See Paragraph 11.01.A for definition.

17. *Drawings*--That part of the Contract Documents prepared or approved by Engineer which graphically shows the scope, extent, and character of the Work to be performed by Contractor. Shop Drawings and

EJCDC C-700 Standard General Conditions of the Construction Contract.
Copyright © 2002 National Society of Professional Engineers for EJCDC. All rights reserved.

other Contractor submittals are not Drawings as so defined.

18. *Effective Date of the Agreement*--The date indicated in the Agreement on which it becomes effective, but if no such date is indicated, it means the date on which the Agreement is signed and delivered by the last of the two parties to sign and deliver.

19. *Engineer*--The individual or entity named as such in the Agreement.

20. *Field Order*--A written order issued by Engineer which requires minor changes in the Work but which does not involve a change in the Contract Price or the Contract Times.

21. *General Requirements*--Sections of Division 1 of the Specifications. The General Requirements pertain to all sections of the Specifications.

22. *Hazardous Environmental Condition*--The presence at the Site of Asbestos, PCBs, Petroleum, Hazardous Waste, or Radioactive Material in such quantities or circumstances that may present a substantial danger to persons or property exposed thereto in connection with the Work.

23. *Hazardous Waste*--The term Hazardous Waste shall have the meaning provided in Section 1004 of the Solid Waste Disposal Act (42 USC Section 6903) as amended from time to time.

24. *Laws and Regulations; Laws or Regulations*--Any and all applicable laws, rules, regulations, ordinances, codes, and orders of any and all governmental bodies, agencies, authorities, and courts having jurisdiction.

25. *Liens*--Charges, security interests, or encumbrances upon Project funds, real property, or personal property.

26. *Milestone*--A principal event specified in the Contract Documents relating to an intermediate completion date or time prior to Substantial Completion of all the Work.

27. *Notice of Award*--The written notice by Owner to the Successful Bidder stating that upon timely compliance by the Successful Bidder with the conditions precedent listed therein, Owner will sign and deliver the Agreement.

28. *Notice to Proceed*--A written notice given by Owner to Contractor fixing the date on which the Contract Times will commence to run and on which Contractor shall start to perform the Work under the Contract Documents.

29. *Owner*--The individual or entity with whom Contractor has entered into the Agreement and for whom the Work is to be performed.

30. *PCBs*--Polychlorinated biphenyls.

31. *Petroleum*--Petroleum, including crude oil or any fraction thereof which is liquid at standard conditions of temperature and pressure (60 degrees Fahrenheit and 14.7 pounds per square inch absolute), such as oil, petroleum, fuel oil, oil sludge, oil refuse, gasoline, kerosene, and oil mixed with other non-Hazardous Waste and crude oils.

32. *Progress Schedule*--A schedule, prepared and maintained by Contractor, describing the sequence and duration of the activities comprising the Contractor's plan to accomplish the Work within the Contract Times.

33. *Project*--The total construction of which the Work to be performed under the Contract Documents may be the whole, or a part.

34. *Project Manual*--The bound documentary information prepared for bidding and constructing the Work. A listing of the contents of the Project Manual, which may be bound in one or more volumes, is contained in the table(s) of contents.

35. *Radioactive Material*--Source, special nuclear, or byproduct material as defined by the Atomic Energy Act of 1954 (42 USC Section 2011 et seq.) as amended from time to time.

36. *Related Entity* -- An officer, director, partner, employee, agent, consultant, or subcontractor.

EJCDC C-700 Standard General Conditions of the Construction Contract.
Copyright © 2002 National Society of Professional Engineers for EJCDC. All rights reserved.

37. *Resident Project Representative*--The authorized representative of Engineer who may be assigned to the Site or any part thereof.

38. *Samples*--Physical examples of materials, equipment, or workmanship that are representative of some portion of the Work and which establish the standards by which such portion of the Work will be judged.

39. *Schedule of Submittals*--A schedule, prepared and maintained by Contractor, of required submittals and the time requirements to support scheduled performance of related construction activities.

40. *Schedule of Values*--A schedule, prepared and maintained by Contractor, allocating portions of the Contract Price to various portions of the Work and used as the basis for reviewing Contractor's Applications for Payment.

41. *Shop Drawings*--All drawings, diagrams, illustrations, schedules, and other data or information which are specifically prepared or assembled by or for Contractor and submitted by Contractor to illustrate some portion of the Work.

42. *Site*--Lands or areas indicated in the Contract Documents as being furnished by Owner upon which the Work is to be performed, including rights-of-way and easements for access thereto, and such other lands furnished by Owner which are designated for the use of Contractor.

43. *Specifications*--That part of the Contract Documents consisting of written requirements for materials, equipment, systems, standards and workmanship as applied to the Work, and certain administrative requirements and procedural matters applicable thereto.

44. *Subcontractor*--An individual or entity having a direct contract with Contractor or with any other Subcontractor for the performance of a part of the Work at the Site.

45. *Substantial Completion*--The time at which the Work (or a specified part thereof) has progressed to the point where, in the opinion of Engineer, the Work (or a specified part thereof) is sufficiently complete, in accordance with the Contract Documents, so that the Work (or a specified part thereof) can be utilized for the purposes for which it is intended. The terms "substantially complete" and "substantially completed" as applied to all or part of the Work refer to Substantial Completion thereof.

46. *Successful Bidder*--The Bidder submitting a responsive Bid to whom Owner makes an award.

47. *Supplementary Conditions*--That part of the Contract Documents which amends or supplements these General Conditions.

48. *Supplier*--A manufacturer, fabricator, supplier, distributor, materialman, or vendor having a direct contract with Contractor or with any Subcontractor to furnish materials or equipment to be incorporated in the Work by Contractor or any Subcontractor.

49. *Underground Facilities*--All underground pipelines, conduits, ducts, cables, wires, manholes, vaults, tanks, tunnels, or other such facilities or attachments, and any encasements containing such facilities, including those that convey electricity, gases, steam, liquid petroleum products, telephone or other communications, cable television, water, wastewater, storm water, other liquids or chemicals, or traffic or other control systems.

50. *Unit Price Work*--Work to be paid for on the basis of unit prices.

51. *Work*--The entire construction or the various separately identifiable parts thereof required to be provided under the Contract Documents. Work includes and is the result of performing or providing all labor, services, and documentation necessary to produce such construction, and furnishing, installing, and incorporating all materials and equipment into such construction, all as required by the Contract Documents.

52. *Work Change Directive*--A written statement to Contractor issued on or after the Effective Date of the Agreement and signed by Owner and recommended by Engineer ordering an addition, deletion, or revision in the Work, or responding to differing or unforeseen subsurface or physical conditions under which the Work is to be performed or to emergencies. A Work Change Directive will not change the Contract Price or the Contract Times but is evidence that the parties expect that the change ordered or documented by a Work Change Directive will be incorporated in a subsequently issued Change Order following negotiations by the parties as to its effect, if any, on the Contract Price or Contract Times.

EJCDC C-700 Standard General Conditions of the Construction Contract.
Copyright © 2002 National Society of Professional Engineers for EJCDC. All rights reserved.

1.02 *Terminology*

A. The following words or terms are not defined but, when used in the Bidding Requirements or Contract Documents, have the following meaning.

B. *Intent of Certain Terms or Adjectives*

1. The Contract Documents include the terms "as allowed," "as approved," "as ordered", "as directed" or terms of like effect or import to authorize an exercise of professional judgment by Engineer. In addition, the adjectives "reasonable," "suitable," "acceptable," "proper," "satisfactory," or adjectives of like effect or import are used to describe an action or determination of Engineer as to the Work. It is intended that such exercise of professional judgment, action or determination will be solely to evaluate, in general, the Work for compliance with the requirements of and information in the Contract Documents and conformance with the design concept of the completed Project as a functioning whole as shown or indicated in the Contract Documents (unless there is a specific statement indicating otherwise). The use of any such term or adjective is not intended to and shall not be effective to assign to Engineer any duty or authority to supervise or direct the performance of the Work or any duty or authority to undertake responsibility contrary to the provisions of Paragraph 9.09 or any other provision of the Contract Documents.

C. *Day*

1. The word "day" means a calendar day of 24 hours measured from midnight to the next midnight.

D. *Defective*

1. The word "defective," when modifying the word "Work," refers to Work that is unsatisfactory, faulty, or deficient in that it:

a. does not conform to the Contract Documents, or

b. does not meet the requirements of any applicable inspection, reference standard, test, or approval referred to in the Contract Documents, or

c. has been damaged prior to Engineer's - recommendation of final payment (unless responsibility for the protection thereof has been assumed by Owner at Substantial Completion in accordance with Paragraph 14.04 or 14.05).

E. *Furnish, Install, Perform, Provide*

1. The word "furnish," when used in connection with services, materials, or equipment, shall mean to supply and deliver said services, materials, or equipment to the Site (or some other specified location) ready for use or installation and in usable or operable condition.

2. The word "install," when used in connection with services, materials, or equipment, shall mean to put into use or place in final position said services, materials, or equipment complete and ready for intended use.

3. The words "perform" or "provide," when used in connection with services, materials, or equipment, shall mean to furnish and install said services, materials, or equipment complete and ready for intended use.

4. When "furnish," "install," "perform," or "provide" is not used in connection with services, materials, or equipment in a context clearly requiring an obligation of Contractor, "provide" is implied.

F. Unless stated otherwise in the Contract Documents, words or phrases which have a well-known technical or construction industry or trade meaning are used in the Contract Documents in accordance with such recognized meaning.

ARTICLE 2 - PRELIMINARY MATTERS

2.01 *Delivery of Bonds and Evidence of Insurance*

A. When Contractor delivers the executed counterparts of the Agreement to Owner, Contractor shall also deliver to Owner such bonds as Contractor may be required to furnish.

B. *Evidence of Insurance:* Before any Work at the Site is started, Contractor and Owner shall each deliver to the other, with copies to each additional insured identified in the Supplementary Conditions, certificates of insurance (and other evidence of insurance which either of them or any additional insured may reasonably request) which Contractor and Owner respectively are required to purchase and maintain in accordance with Article 5.

2.02 *Copies of Documents*

A. Owner shall furnish to Contractor up to ten printed or hard copies of the Drawings and Project

EJCDC C-700 Standard General Conditions of the Construction Contract.
Copyright © 2002 National Society of Professional Engineers for EJCDC. All rights reserved.

Manual. Additional copies will be furnished upon request at the cost of reproduction.

2.03 *Commencement of Contract Times; Notice to Proceed*

A. The Contract Times will commence to run on the thirtieth day after the Effective Date of the Agreement or, if a Notice to Proceed is given, on the day indicated in the Notice to Proceed. A Notice to Proceed may be given at any time within 30 days after the Effective Date of the Agreement. In no event will the Contract Times commence to run later than the sixtieth day after the day of Bid opening or the thirtieth day after the Effective Date of the Agreement, whichever date is earlier.

2.04 *Starting the Work*

A. Contractor shall start to perform the Work on the date when the Contract Times commence to run. No Work shall be done at the Site prior to the date on which the Contract Times commence to run.

2.05 *Before Starting Construction*

A. *Preliminary Schedules:* Within 10 days after the Effective Date of the Agreement (unless otherwise specified in the General Requirements), Contractor shall submit to Engineer for timely review**:**

1. a preliminary Progress Schedule; indicating the times (numbers of days or dates) for starting and completing the various stages of the Work, including any Milestones specified in the Contract Documents;

2. a preliminary Schedule of Submittals; and

3. a preliminary Schedule of Values for all of the Work which includes quantities and prices of items which when added together equal the Contract Price and subdivides the Work into component parts in sufficient detail to serve as the basis for progress payments during performance of the Work. Such prices will include an appropriate amount of overhead and profit applicable to each item of Work.

2.06 *Preconstruction Conference*

A. Before any Work at the Site is started, a conference attended by Owner, Contractor, Engineer, and others as appropriate will be held to establish a working understanding among the parties as to the Work and to discuss the schedules referred to in Paragraph 2.05.A, procedures for handling Shop Drawings and other submittals, processing Applications for Payment, and maintaining required records.

2.07 *Initial Acceptance of Schedules*

A. At least 10 days before submission of the first Application for Payment a conference attended by Contractor, Engineer, and others as appropriate will be held to review for acceptability to Engineer as provided below the schedules submitted in accordance with Paragraph 2.05.A. Contractor shall have an additional 10 days to make corrections and adjustments and to complete and resubmit the schedules. No progress payment shall be made to Contractor until acceptable schedules are submitted to Engineer.

1. The Progress Schedule will be acceptable to Engineer if it provides an orderly progression of the Work to completion within the Contract Times. Such acceptance will not impose on Engineer responsibility for the Progress Schedule, for sequencing, scheduling, or progress of the Work nor interfere with or relieve Contractor from Contractor's full responsibility therefor.

2. Contractor's Schedule of Submittals will be acceptable to Engineer if it provides a workable arrangement for reviewing and processing the required submittals.

3. Contractor's Schedule of Values will be acceptable to Engineer as to form and substance if it provides a reasonable allocation of the Contract Price to component parts of the Work.

ARTICLE 3 - CONTRACT DOCUMENTS: INTENT, AMENDING, REUSE

3.01 *Intent*

A. The Contract Documents are complementary; what is required by one is as binding as if required by all.

B. It is the intent of the Contract Documents to describe a functionally complete Project (or part thereof) to be constructed in accordance with the Contract Documents. Any labor, documentation, services, materials, or equipment that may reasonably be inferred from the Contract Documents or from prevailing custom or trade usage as being required to produce the intended result will be provided whether or not specifically called for at no additional cost to Owner.

EJCDC C-700 Standard General Conditions of the Construction Contract.
Copyright © 2002 National Society of Professional Engineers for EJCDC. All rights reserved.

C. Clarifications and interpretations of the Contract Documents shall be issued by Engineer as provided in Article 9.

3.02 *Reference Standards*

A. Standards, Specifications, Codes, Laws, and Regulations.

1. Reference to standards, specifications, manuals, or codes of any technical society, organization, or association, or to Laws or Regulations, whether such reference be specific or by implication, shall mean the standard, specification, manual, code, or Laws or Regulations in effect at the time of opening of Bids (or on the Effective Date of the Agreement if there were no Bids), except as may be otherwise specifically stated in the Contract Documents.

2. No provision of any such standard, specification, manual or code, or any instruction of a Supplier shall be effective to change the duties or responsibilities of Owner, Contractor, or Engineer, or any of their subcontractors, consultants, agents, or employees from those set forth in the Contract Documents. No such provision or instruction shall be effective to assign to Owner, or Engineer, or any of, their Related Entities, any duty or authority to supervise or direct the performance of the Work or any duty or authority to undertake responsibility inconsistent with the provisions of the Contract Documents.

3.03 *Reporting and Resolving Discrepancies*

A. Reporting Discrepancies

1. *Contractor's Review of Contract Documents Before Starting Work*: Before undertaking each part of the Work, Contractor shall carefully study and compare the Contract Documents and check and verify pertinent figures therein and all applicable field measurements. Contractor shall promptly report in writing to Engineer any conflict, error, ambiguity, or discrepancy which Contractor may discover and shall obtain a written interpretation or clarification from Engineer before proceeding with any Work affected thereby.

2. *Contractor's Review of Contract Documents During Performance of Work*: If, during the performance of the Work, Contractor discovers any conflict, error, ambiguity, or discrepancy within the Contract Documents or between the Contract Documents and any provision of any Law or Regulation applicable to the performance of the Work or of any standard, specification, manual or code, or of any instruction of any Supplier, Contractor shall promptly report it to Engineer in writing. Contractor shall not proceed with the Work affected thereby (except in an emergency as required by Paragraph 6.16.A) until an amendment or supplement to the Contract Documents has been issued by one of the methods indicated in Paragraph 3.04.

3. Contractor shall not be liable to Owner or Engineer for failure to report any conflict, error, ambiguity, or discrepancy in the Contract Documents unless Contractor knew or reasonably should have known thereof.

B. Resolving Discrepancies

1. Except as may be otherwise specifically stated in the Contract Documents, the provisions of the Contract Documents shall take precedence in resolving any conflict, error, ambiguity, or discrepancy between the provisions of the Contract Documents and:

a. the provisions of any standard, specification, manual, code, or instruction (whether or not specifically incorporated by reference in the Contract Documents); or

b. the provisions of any Laws or Regulations applicable to the performance of the Work (unless such an interpretation of the provisions of the Contract Documents would result in violation of such Law or Regulation).

3.04 *Amending and Supplementing Contract Documents*

A. The Contract Documents may be amended to provide for additions, deletions, and revisions in the Work or to modify the terms and conditions thereof by either a Change Order or a Work Change Directive.

B. The requirements of the Contract Documents may be supplemented, and minor variations and deviations in the Work may be authorized, by one or more of the following ways:

1. A Field Order;

2. Engineer's approval of a Shop Drawing or Sample; (Subject to the provisions of Paragraph 6.17.D.3); or

3. Engineer's written interpretation or clarification.

EJCDC C-700 Standard General Conditions of the Construction Contract.
Copyright © 2002 National Society of Professional Engineers for EJCDC. All rights reserved.

3.05 *Reuse of Documents*

A. Contractor and any Subcontractor or Supplier or other individual or entity performing or furnishing all of the Work under a direct or indirect contract with Contractor, shall not:

1. have or acquire any title to or ownership rights in any of the Drawings, Specifications, or other documents (or copies of any thereof) prepared by or bearing the seal of Engineer or Engineer's consultants, including electronic media editions; or

2. reuse any of such Drawings, Specifications, other documents, or copies thereof on extensions of the Project or any other project without written consent of Owner and Engineer and specific written verification or adaption by Engineer.

B. The prohibition of this Paragraph 3.05 will survive final payment, or termination of the Contract. Nothing herein shall preclude Contractor from retaining copies of the Contract Documents for record purposes.

3.06 *Electronic Data*

A. Copies of data furnished by Owner or Engineer to Contractor or Contractor to Owner or Engineer that may be relied upon are limited to the printed copies (also known as hard copies). Files in electronic media format of text, data, graphics, or other types are furnished only for the convenience of the receiving party. Any conclusion or information obtained or derived from such electronic files will be at the user's sole risk. If there is a discrepancy between the electronic files and the hard copies, the hard copies govern.

B. Because data stored in electronic media format can deteriorate or be modified inadvertently or otherwise without authorization of the data's creator, the party receiving electronic files agrees that it will perform acceptance tests or procedures within 60 days, after which the receiving party shall be deemed to have accepted the data thus transferred. Any errors detected within the 60-day acceptance period will be corrected by the transferring party..

C. When transferring documents in electronic media format, the transferring party makes no representations as to long term compatibility, usability, or readability of documents resulting from the use of software application packages, operating systems, or computer hardware differing from those used by the data's creator.

ARTICLE 4 - AVAILABILITY OF LANDS; SUBSURFACE AND PHYSICAL CONDITIONS; HAZARDOUS ENVIRONMENTAL CONDITIONS; REFERENCE POINTS

4.01 *Availability of Lands*

A. Owner shall furnish the Site. Owner shall notify Contractor of any encumbrances or restrictions not of general application but specifically related to use of the Site with which Contractor must comply in performing the Work. Owner will obtain in a timely manner and pay for easements for permanent structures or permanent changes in existing facilities. If Contractor and Owner are unable to agree on entitlement to or on the amount or extent, if any, of any adjustment in the Contract Price or Contract Times, or both, as a result of any delay in Owner's furnishing the Site or a part thereof, Contractor may make a Claim therefor as provided in Paragraph 10.05.

B. Upon reasonable written request, Owner shall furnish Contractor with a current statement of record legal title and legal description of the lands upon which the Work is to be performed and Owner's interest therein as necessary for giving notice of or filing a mechanic's or construction lien against such lands in accordance with applicable Laws and Regulations.

C. Contractor shall provide for all additional lands and access thereto that may be required for temporary construction facilities or storage of materials and equipment.

4.02 *Subsurface and Physical Conditions*

A. *Reports and Drawings:* The Supplementary Conditions identify:

1. those reports of explorations and tests of subsurface conditions at or contiguous to the Site that Engineer has used in preparing the Contract Documents; and

2. those drawings of physical conditions in or relating to existing surface or subsurface structures at or contiguous to the Site (except Underground Facilities) that Engineer has used in preparing the Contract Documents.

B. *Limited Reliance by Contractor on Technical Data Authorized:* Contractor may rely upon the general accuracy of the "technical data" contained in such reports and drawings, but such reports and drawings are not

EJCDC C-700 Standard General Conditions of the Construction Contract.
Copyright © 2002 National Society of Professional Engineers for EJCDC. All rights reserved.

Contract Documents. Such "technical data" is identified in the Supplementary Conditions. Except for such reliance on such "technical data," Contractor may not rely upon or make any claim against Owner or Engineer, or any of their Related Entities with respect to:

1. the completeness of such reports and drawings for Contractor's purposes, including, but not limited to, any aspects of the means, methods, techniques, sequences, and procedures of construction to be employed by Contractor, and safety precautions and programs incident thereto; or

2. other data, interpretations, opinions, and information contained in such reports or shown or indicated in such drawings; or

3. any Contractor interpretation of or conclusion drawn from any "technical data" or any such other data, interpretations, opinions, or information.

4.03 *Differing Subsurface or Physical Conditions*

A. *Notice:* If Contractor believes that any subsurface or physical condition at or contiguous to the Site that is uncovered or revealed either:

1. is of such a nature as to establish that any "technical data" on which Contractor is entitled to rely as provided in Paragraph 4.02 is materially inaccurate; or

2. is of such a nature as to require a change in the Contract Documents; or

3. differs materially from that shown or indicated in the Contract Documents; or

4. is of an unusual nature, and differs materially from conditions ordinarily encountered and generally recognized as inherent in work of the character provided for in the Contract Documents;

then Contractor shall, promptly after becoming aware thereof and before further disturbing the subsurface or physical conditions or performing any Work in connection therewith (except in an emergency as required by Paragraph 6.16.A), notify Owner and Engineer in writing about such condition. Contractor shall not further disturb such condition or perform any Work in connection therewith (except as aforesaid) until receipt of written order to do so.

B. *Engineer's Review*: After receipt of written notice as required by Paragraph 4.03.A, Engineer will promptly review the pertinent condition, determine the necessity of Owner's obtaining additional exploration or tests with respect thereto, and advise Owner in writing (with a copy to Contractor) of Engineer's findings and conclusions.

C. Possible Price and Times Adjustments

1. The Contract Price or the Contract Times, or both, will be equitably adjusted to the extent that the existence of such differing subsurface or physical condition causes an increase or decrease in Contractor's cost of, or time required for, performance of the Work; subject, however, to the following:

a. such condition must meet any one or more of the categories described in Paragraph 4.03.A; and

b. with respect to Work that is paid for on a Unit Price Basis, any adjustment in Contract Price will be subject to the provisions of Paragraphs 9.07 and 11.03.

2. Contractor shall not be entitled to any adjustment in the Contract Price or Contract Times if:

a. Contractor knew of the existence of such conditions at the time Contractor made a final commitment to Owner with respect to Contract Price and Contract Times by the submission of a Bid or becoming bound under a negotiated contract; or

b. the existence of such condition could reasonably have been discovered or revealed as a result of any examination, investigation, exploration, test, or study of the Site and contiguous areas required by the Bidding Requirements or Contract Documents to be conducted by or for Contractor prior to Contractor's making such final commitment; or

c. Contractor failed to give the written notice as required by Paragraph 4.03.A.

3. If Owner and Contractor are unable to agree on entitlement to or on the amount or extent, if any, of any adjustment in the Contract Price or Contract Times, or both, a Claim may be made therefor as provided in Paragraph 10.05. However, Owner and Engineer, and any of their Related Entities shall not be liable to Contractor for any claims, costs, losses, or damages (including but

EJCDC C-700 Standard General Conditions of the Construction Contract.
Copyright © 2002 National Society of Professional Engineers for EJCDC. All rights reserved.

not limited to all fees and charges of engineers, architects, attorneys, and other professionals and all court or arbitration or other dispute resolution costs) sustained by Contractor on or in connection with any other project or anticipated project.

4.04 *Underground Facilities*

A. *Shown or Indicated:* The information and data shown or indicated in the Contract Documents with respect to existing Underground Facilities at or contiguous to the Site is based on information and data furnished to Owner or Engineer by the owners of such Underground Facilities, including Owner, or by others. Unless it is otherwise expressly provided in the Supplementary Conditions:

1. Owner and Engineer shall not be responsible for the accuracy or completeness of any such information or data; and

2. the cost of all of the following will be included in the Contract Price, and Contractor shall have full responsibility for:

a. reviewing and checking all such information and data,

b. locating all Underground Facilities shown or indicated in the Contract Documents,

c. coordination of the Work with the owners of such Underground Facilities, including Owner, during construction, and

d. the safety and protection of all such Underground Facilities and repairing any damage thereto resulting from the Work.

B. *Not Shown or Indicated*

1. If an Underground Facility is uncovered or revealed at or contiguous to the Site which was not shown or indicated, or not shown or indicated with reasonable accuracy in the Contract Documents, Contractor shall, promptly after becoming aware thereof and before further disturbing conditions affected thereby or performing any Work in connection therewith (except in an emergency as required by Paragraph 6.16.A), identify the owner of such Underground Facility and give written notice to that owner and to Owner and Engineer. Engineer will promptly review the Underground Facility and determine the extent, if any, to which a change is required in the Contract Documents to reflect and document the consequences of the existence or location of the Underground Facility. During such time, Contractor shall be responsible for the safety and protection of such Underground Facility.

2. If Engineer concludes that a change in the Contract Documents is required, a Work Change Directive or a Change Order will be issued to reflect and document such consequences. An equitable adjustment shall be made in the Contract Price or Contract Times, or both, to the extent that they are attributable to the existence or location of any Underground Facility that was not shown or indicated or not shown or indicated with reasonable accuracy in the Contract Documents and that Contractor did not know of and could not reasonably have been expected to be aware of or to have anticipated. If Owner and Contractor are unable to agree on entitlement to or on the amount or extent, if any, of any such adjustment in Contract Price or Contract Times, Owner or Contractor may make a Claim therefor as provided in Paragraph 10.05.

4.05 *Reference Points*

A. Owner shall provide engineering surveys to establish reference points for construction which in Engineer's judgment are necessary to enable Contractor to proceed with the Work. Contractor shall be responsible for laying out the Work, shall protect and preserve the established reference points and property monuments, and shall make no changes or relocations without the prior written approval of Owner. Contractor shall report to Engineer whenever any reference point or property monument is lost or destroyed or requires relocation because of necessary changes in grades or locations, and shall be responsible for the accurate replacement or relocation of such reference points or property monuments by professionally qualified personnel.

4.06 *Hazardous Environmental Condition at Site*

A. *Reports and Drawings:* Reference is made to the Supplementary Conditions for the identification of those reports and drawings relating to a Hazardous Environmental Condition identified at the Site, if any, that have been utilized by the Engineer in the preparation of the Contract Documents.

B. *Limited Reliance by Contractor on Technical Data Authorized:* Contractor may rely upon the general accuracy of the "technical data" contained in such reports and drawings, but such reports and drawings are not Contract Documents. Such "technical data" is identified in the Supplementary Conditions. Except for such reliance on such "technical data," Contractor may not rely upon or make any claim against Owner or Engineer, or any of their Related Entities with respect to:

EJCDC C-700 Standard General Conditions of the Construction Contract.
Copyright © 2002 National Society of Professional Engineers for EJCDC. All rights reserved.

1. the completeness of such reports and drawings for Contractor's purposes, including, but not limited to, any aspects of the means, methods, techniques, sequences and procedures of construction to be employed by Contractor and safety precautions and programs incident thereto; or

2. other data, interpretations, opinions and information contained in such reports or shown or indicated in such drawings; or

3. any Contractor interpretation of or conclusion drawn from any "technical data" or any such other data, interpretations, opinions or information.

C. Contractor shall not be responsible for any Hazardous Environmental Condition uncovered or revealed at the Site which was not shown or indicated in Drawings or Specifications or identified in the Contract Documents to be within the scope of the Work. Contractor shall be responsible for a Hazardous Environmental Condition created with any materials brought to the Site by Contractor, Subcontractors, Suppliers, or anyone else for whom Contractor is responsible.

D. If Contractor encounters a Hazardous Environmental Condition or if Contractor or anyone for whom Contractor is responsible creates a Hazardous Environmental Condition, Contractor shall immediately: (i) secure or otherwise isolate such condition; (ii) stop all Work in connection with such condition and in any area affected thereby (except in an emergency as required by Paragraph 6.16.A); and (iii) notify Owner and Engineer (and promptly thereafter confirm such notice in writing). Owner shall promptly consult with Engineer concerning the necessity for Owner to retain a qualified expert to evaluate such condition or take corrective action, if any.

E. Contractor shall not be required to resume Work in connection with such condition or in any affected area until after Owner has obtained any required permits related thereto and delivered to Contractor written notice: (i) specifying that such condition and any affected area is or has been rendered safe for the resumption of Work; or (ii) specifying any special conditions under which such Work may be resumed safely. If Owner and Contractor cannot agree as to entitlement to or on the amount or extent, if any, of any adjustment in Contract Price or Contract Times, or both, as a result of such Work stoppage or such special conditions under which Work is agreed to be resumed by Contractor, either party may make a Claim therefor as provided in Paragraph 10.05.

F. If after receipt of such written notice Contractor does not agree to resume such Work based on a reasonable belief it is unsafe, or does not agree to resume such Work under such special conditions, then Owner may order the portion of the Work that is in the area affected by such condition to be deleted from the Work. If Owner and Contractor cannot agree as to entitlement to or on the amount or extent, if any, of an adjustment in Contract Price or Contract Times as a result of deleting such portion of the Work, then either party may make a Claim therefor as provided in Paragraph 10.05. Owner may have such deleted portion of the Work performed by Owner's own forces or others in accordance with Article 7.

G. To the fullest extent permitted by Laws and Regulations, Owner shall indemnify and hold harmless Contractor, Subcontractors, and Engineer, and the officers, directors, partners, employees, agents, consultants, and subcontractors of each and any of them from and against all claims, costs, losses, and damages (including but not limited to all fees and charges of engineers, architects, attorneys, and other professionals and all court or arbitration or other dispute resolution costs) arising out of or relating to a Hazardous Environmental Condition, provided that such Hazardous Environmental Condition: (i) was not shown or indicated in the Drawings or Specifications or identified in the Contract Documents to be included within the scope of the Work, and (ii) was not created by Contractor or by anyone for whom Contractor is responsible. Nothing in this Paragraph 4.06. G shall obligate Owner to indemnify any individual or entity from and against the consequences of that individual's or entity's own negligence.

H. To the fullest extent permitted by Laws and Regulations, Contractor shall indemnify and hold harmless Owner and Engineer, and the officers, directors, partners, employees, agents, consultants, and subcontractors of each and any of them from and against all claims, costs, losses, and damages (including but not limited to all fees and charges of engineers, architects, attorneys, and other professionals and all court or arbitration or other dispute resolution costs) arising out of or relating to a Hazardous Environmental Condition created by Contractor or by anyone for whom Contractor is responsible. Nothing in this Paragraph 4.06.H shall obligate Contractor to indemnify any individual or entity from and against the consequences of that individual's or entity's own negligence.

I. The provisions of Paragraphs 4.02, 4.03, and 4.04 do not apply to a Hazardous Environmental Condition uncovered or revealed at the Site.

EJCDC C-700 Standard General Conditions of the Construction Contract.
Copyright © 2002 National Society of Professional Engineers for EJCDC. All rights reserved.

ARTICLE 5 - BONDS AND INSURANCE

5.01 *Performance, Payment, and Other Bonds*

A. Contractor shall furnish performance and payment bonds, each in an amount at least equal to the Contract Price as security for the faithful performance and payment of all of Contractor's obligations under the Contract Documents. These bonds shall remain in effect until one year after the date when final payment becomes due or until completion of the correction period specified in Paragraph 13.07, whichever is later, except as provided otherwise by Laws or Regulations or by the Contract Documents. Contractor shall also furnish such other bonds as are required by the Contract Documents.

B. All bonds shall be in the form prescribed by the Contract Documents except as provided otherwise by Laws or Regulations, and shall be executed by such sureties as are named in the current list of "Companies Holding Certificates of Authority as Acceptable Sureties on Federal Bonds and as Acceptable Reinsuring Companies" as published in Circular 570 (amended) by the Financial Management Service, Surety Bond Branch, U.S. Department of the Treasury. All bonds signed by an agent must be accompanied by a certified copy of the agent's authority to act.

C. If the surety on any bond furnished by Contractor is declared bankrupt or becomes insolvent or its right to do business is terminated in any state where any part of the Project is located or it ceases to meet the requirements of Paragraph 5.01.B, Contractor shall promptly notify Owner and Engineer and shall, within 20 days after the event giving rise to such notification, provide another bond and surety, both of which shall comply with the requirements of Paragraphs 5.01.B and 5.02.

5.02 *Licensed Sureties and Insurers*

A. All bonds and insurance required by the Contract Documents to be purchased and maintained by Owner or Contractor shall be obtained from surety or insurance companies that are duly licensed or authorized in the jurisdiction in which the Project is located to issue bonds or insurance policies for the limits and coverages so required. Such surety and insurance companies shall also meet such additional requirements and qualifications as may be provided in the Supplementary Conditions.

5.03 *Certificates of Insurance*

A. Contractor shall deliver to Owner, with copies to each additional insured identified in the Supplementary Conditions, certificates of insurance (and other evidence of insurance requested by Owner or any other additional insured) which Contractor is required to purchase and maintain.

B. Owner shall deliver to Contractor, with copies to each additional insured identified in the Supplementary Conditions, certificates of insurance (and other evidence of insurance requested by Contractor or any other additional insured) which Owner is required to purchase and maintain.

5.04 *Contractor's Liability Insurance*

A. Contractor shall purchase and maintain such liability and other insurance as is appropriate for the Work being performed and as will provide protection from claims set forth below which may arise out of or result from Contractor's performance of the Work and Contractor's other obligations under the Contract Documents, whether it is to be performed by Contractor, any Subcontractor or Supplier, or by anyone directly or indirectly employed by any of them to perform any of the Work, or by anyone for whose acts any of them may be liable:

1. claims under workers' compensation, disability benefits, and other similar employee benefit acts;

2. claims for damages because of bodily injury, occupational sickness or disease, or death of Contractor's employees;

3. claims for damages because of bodily injury, sickness or disease, or death of any person other than Contractor's employees;

4. claims for damages insured by reasonably available personal injury liability coverage which are sustained:

a. by any person as a result of an offense directly or indirectly related to the employment of such person by Contractor, or

b. by any other person for any other reason;

5. claims for damages, other than to the Work itself, because of injury to or destruction of tangible

EJCDC C-700 Standard General Conditions of the Construction Contract.
Copyright © 2002 National Society of Professional Engineers for EJCDC. All rights reserved.

property wherever located, including loss of use resulting therefrom; and

6. claims for damages because of bodily injury or death of any person or property damage arising out of the ownership, maintenance or use of any motor vehicle.

B. The policies of insurance required by this Paragraph 5.04 shall:

1. with respect to insurance required by Paragraphs 5.04.A.3 through 5.04.A.6 inclusive, include as additional insured (subject to any customary exclusion regarding professional liability) Owner and Engineer, and any other individuals or entities identified in the Supplementary Conditions, all of whom shall be listed as additional insureds, and include coverage for the respective officers, directors, partners, employees, agents, consultants and subcontractors of each and any of all such additional insureds, and the insurance afforded to these additional insureds shall provide primary coverage for all claims covered thereby;

2. include at least the specific coverages and be written for not less than the limits of liability provided in the Supplementary Conditions or required by Laws or Regulations, whichever is greater;

3. include completed operations insurance;

4. include contractual liability insurance covering Contractor's indemnity obligations under Paragraphs 6.11 and 6.20;

5. contain a provision or endorsement that the coverage afforded will not be canceled, materially changed or renewal refused until at least 30 days prior written notice has been given to Owner and Contractor and to each other additional insured identified in the Supplementary Conditions to whom a certificate of insurance has been issued (and the certificates of insurance furnished by the Contractor pursuant to Paragraph 5.03 will so provide);

6. remain in effect at least until final payment and at all times thereafter when Contractor may be correcting, removing, or replacing defective Work in accordance with Paragraph 13.07; and

7. with respect to completed operations insurance, and any insurance coverage written on a claims-made basis, remain in effect for at least two years after final payment.

a. Contractor shall furnish Owner and each other additional insured identified in the Supplementary Conditions, to whom a certificate of insurance has been issued, evidence satisfactory to Owner and any such additional insured of continuation of such insurance at final payment and one year thereafter.

5.05 *Owner's Liability Insurance*

A. In addition to the insurance required to be provided by Contractor under Paragraph 5.04, Owner, at Owner's option, may purchase and maintain at Owner's expense Owner's own liability insurance as will protect Owner against claims which may arise from operations under the Contract Documents.

5.06 *Property Insurance*

A. Unless otherwise provided in the Supplementary Conditions, Owner shall purchase and maintain property insurance upon the Work at the Site in the amount of the full replacement cost thereof (subject to such deductible amounts as may be provided in the Supplementary Conditions or required by Laws and Regulations). This insurance shall:

1. include the interests of Owner, Contractor, Subcontractors, and Engineer, and any other individuals or entities identified in the Supplementary Conditions, and the officers, directors, partners, employees, agents, consultants and subcontractors of each and any of them, each of whom is deemed to have an insurable interest and shall be listed as an insured or additional insured;

2. be written on a Builder's Risk "all-risk" or open peril or special causes of loss policy form that shall at least include insurance for physical loss or damage to the Work, temporary buildings, false work, and materials and equipment in transit, and shall insure against at least the following perils or causes of loss: fire, lightning, extended coverage, theft, vandalism and malicious mischief, earthquake, collapse, debris removal, demolition occasioned by enforcement of Laws and Regulations, water damage, (other than caused by flood) and such other perils or causes of loss as may be specifically required by the Supplementary Conditions;

3. include expenses incurred in the repair or replacement of any insured property (including but not limited to fees and charges of engineers and architects);

EJCDC C-700 Standard General Conditions of the Construction Contract.
Copyright © 2002 National Society of Professional Engineers for EJCDC. All rights reserved.

4. cover materials and equipment stored at the Site or at another location that was agreed to in writing by Owner prior to being incorporated in the Work, provided that such materials and equipment have been included in an Application for Payment recommended by Engineer;

5. allow for partial utilization of the Work by Owner;

6. include testing and startup; and

7. be maintained in effect until final payment is made unless otherwise agreed to in writing by Owner, Contractor, and Engineer with 30 days written notice to each other additional insured to whom a certificate of insurance has been issued.

B. Owner shall purchase and maintain such boiler and machinery insurance or additional property insurance as may be required by the Supplementary Conditions or Laws and Regulations which will include the interests of Owner, Contractor, Subcontractors, and Engineer, and any other individuals or entities identified in the Supplementary Conditions, and the officers, directors, partners, employees, agents, consultants and subcontractors of each and any of them, each of whom is deemed to have an insurable interest and shall be listed as an insured or additional insured.

C. All the policies of insurance (and the certificates or other evidence thereof) required to be purchased and maintained in accordance with Paragraph 5.06 will contain a provision or endorsement that the coverage afforded will not be canceled or materially changed or renewal refused until at least 30 days prior written notice has been given to Owner and Contractor and to each other additional insured to whom a certificate of insurance has been issued and will contain waiver provisions in accordance with Paragraph 5.07.

D. Owner shall not be responsible for purchasing and maintaining any property insurance specified in this Paragraph 5.06 to protect the interests of Contractor, Subcontractors, or others in the Work to the extent of any deductible amounts that are identified in the Supplementary Conditions. The risk of loss within such identified deductible amount will be borne by Contractor, Subcontractors, or others suffering any such loss, and if any of them wishes property insurance coverage within the limits of such amounts, each may purchase and maintain it at the purchaser's own expense.

E. If Contractor requests in writing that other special insurance be included in the property insurance policies provided under Paragraph 5.06, Owner shall, if possible, include such insurance, and the cost thereof will be charged to Contractor by appropriate Change Order. Prior to commencement of the Work at the Site, Owner shall in writing advise Contractor whether or not such other insurance has been procured by Owner.

5.07 *Waiver of Rights*

A. Owner and Contractor intend that all policies purchased in accordance with Paragraph 5.06 will protect Owner, Contractor, Subcontractors, and Engineer, and all other individuals or entities identified in the Supplementary Conditions to be listed as insureds or additional insureds (and the officers, directors, partners, employees, agents, consultants and subcontractors of each and any of them) in such policies and will provide primary coverage for all losses and damages caused by the perils or causes of loss covered thereby. All such policies shall contain provisions to the effect that in the event of payment of any loss or damage the insurers will have no rights of recovery against any of the insureds or additional insureds thereunder. Owner and Contractor waive all rights against each other and their respective officers, directors, partners, employees, agents, consultants and subcontractors of each and any of them for all losses and damages caused by, arising out of or resulting from any of the perils or causes of loss covered by such policies and any other property insurance applicable to the Work; and, in addition, waive all such rights against Subcontractors, and Engineer, and all other individuals or entities identified in the Supplementary Conditions to be listed as insured or additional insured (and the officers, directors, partners, employees, agents, consultants and subcontractors of each and any of them) under such policies for losses and damages so caused. None of the above waivers shall extend to the rights that any party making such waiver may have to the proceeds of insurance held by Owner as trustee or otherwise payable under any policy so issued.

B. Owner waives all rights against Contractor, Subcontractors, and Engineer, and the officers, directors, partners, employees, agents, consultants and subcontractors of each and any of them for:

1. loss due to business interruption, loss of use, or other consequential loss extending beyond direct physical loss or damage to Owner's property or the Work caused by, arising out of, or resulting from fire or other perils whether or not insured by Owner; and

2. loss or damage to the completed Project or part thereof caused by, arising out of, or resulting from fire or other insured peril or cause of loss covered by any property insurance maintained on the completed Project

EJCDC C-700 Standard General Conditions of the Construction Contract.
Copyright © 2002 National Society of Professional Engineers for EJCDC. All rights reserved.

or part thereof by Owner during partial utilization pursuant to Paragraph 14.05, after Substantial Completion pursuant to Paragraph 14.04, or after final payment pursuant to Paragraph 14.07.

C. Any insurance policy maintained by Owner covering any loss, damage or consequential loss referred to in Paragraph 5.07.B shall contain provisions to the effect that in the event of payment of any such loss, damage, or consequential loss, the insurers will have no rights of recovery against Contractor, Subcontractors, or Engineer, and the officers, directors, partners, employees, agents, consultants and subcontractors of each and any of them.

5.08 *Receipt and Application of Insurance Proceeds*

A. Any insured loss under the policies of insurance required by Paragraph 5.06 will be adjusted with Owner and made payable to Owner as fiduciary for the insureds, as their interests may appear, subject to the requirements of any applicable mortgage clause and of Paragraph 5.08.B. Owner shall deposit in a separate account any money so received and shall distribute it in accordance with such agreement as the parties in interest may reach. If no other special agreement is reached, the damaged Work shall be repaired or replaced, the moneys so received applied on account thereof, and the Work and the cost thereof covered by an appropriate Change Order .

B. Owner as fiduciary shall have power to adjust and settle any loss with the insurers unless one of the parties in interest shall object in writing within 15 days after the occurrence of loss to Owner's exercise of this power. If such objection be made, Owner as fiduciary shall make settlement with the insurers in accordance with such agreement as the parties in interest may reach. If no such agreement among the parties in interest is reached, Owner as fiduciary shall adjust and settle the loss with the insurers and, if required in writing by any party in interest, Owner as fiduciary shall give bond for the proper performance of such duties.

5.09 *Acceptance of Bonds and Insurance; Option to Replace*

A. If either Owner or Contractor has any objection to the coverage afforded by or other provisions of the bonds or insurance required to be purchased and maintained by the other party in accordance with Article 5 on the basis of non-conformance with the Contract Documents, the objecting party shall so notify the other party in writing within 10 days after receipt of the certificates (or other evidence requested) required by Paragraph 2.01.B. Owner and Contractor shall each provide to the other such additional information in respect of insurance provided as the other may reasonably request. If either party does not purchase or maintain all of the bonds and insurance required of such party by the Contract Documents, such party shall notify the other party in writing of such failure to purchase prior to the start of the Work, or of such failure to maintain prior to any change in the required coverage. Without prejudice to any other right or remedy, the other party may elect to obtain equivalent bonds or insurance to protect such other party's interests at the expense of the party who was required to provide such coverage, and a Change Order shall be issued to adjust the Contract Price accordingly.

5.10 *Partial Utilization, Acknowledgment of Property Insurer*

A. If Owner finds it necessary to occupy or use a portion or portions of the Work prior to Substantial Completion of all the Work as provided in Paragraph 14.05, no such use or occupancy shall commence before the insurers providing the property insurance pursuant to Paragraph 5.06 have acknowledged notice thereof and in writing effected any changes in coverage necessitated thereby. The insurers providing the property insurance shall consent by endorsement on the policy or policies, but the property insurance shall not be canceled or permitted to lapse on account of any such partial use or occupancy.

ARTICLE 6 - CONTRACTOR'S RESPONSIBILITIES

6.01 *Supervision and Superintendence*

A. Contractor shall supervise, inspect, and direct the Work competently and efficiently, devoting such attention thereto and applying such skills and expertise as may be necessary to perform the Work in accordance with the Contract Documents. Contractor shall be solely responsible for the means, methods, techniques, sequences, and procedures of construction. Contractor shall not be responsible for the negligence of Owner or Engineer in the design or specification of a specific means, method, technique, sequence, or procedure of construction which is shown or indicated in and expressly required by the Contract Documents.

B. At all times during the progress of the Work, Contractor shall assign a competent resident superintendent who shall not be replaced without written notice to Owner and Engineer except under extraordinary circumstances. The superintendent will be Contractor's representative at the Site and shall have authority to act on behalf of Contractor. All communications given to or

EJCDC C-700 Standard General Conditions of the Construction Contract.
Copyright © 2002 National Society of Professional Engineers for EJCDC. All rights reserved.

received from the superintendent shall be binding on Contractor.

6.02 *Labor; Working Hours*

A. Contractor shall provide competent, suitably qualified personnel to survey and lay out the Work and perform construction as required by the Contract Documents. Contractor shall at all times maintain good discipline and order at the Site.

B. Except as otherwise required for the safety or protection of persons or the Work or property at the Site or adjacent thereto, and except as otherwise stated in the Contract Documents, all Work at the Site shall be performed during regular working hours. Contractor will not permit the performance of Work on a Saturday, Sunday, or any legal holiday without Owner's written consent (which will not be unreasonably withheld) given after prior written notice to Engineer.

6.03 *Services, Materials, and Equipment*

A. Unless otherwise specified in the Contract Documents, Contractor shall provide and assume full responsibility for all services, materials, equipment, labor, transportation, construction equipment and machinery, tools, appliances, fuel, power, light, heat, telephone, water, sanitary facilities, temporary facilities, and all other facilities and incidentals necessary for the performance, testing, start-up, and completion of the Work.

B. All materials and equipment incorporated into the Work shall be as specified or, if not specified, shall be of good quality and new, except as otherwise provided in the Contract Documents. All special warranties and guarantees required by the Specifications shall expressly run to the benefit of Owner. If required by Engineer, Contractor shall furnish satisfactory evidence (including reports of required tests) as to the source, kind, and quality of materials and equipment.

C. All materials and equipment shall be stored, applied, installed, connected, erected, protected, used, cleaned, and conditioned in accordance with instructions of the applicable Supplier, except as otherwise may be provided in the Contract Documents.

6.04 *Progress Schedule*

A. Contractor shall adhere to the Progress Schedule established in accordance with Paragraph 2.07 as it may be adjusted from time to time as provided below.

1. Contractor shall submit to Engineer for acceptance (to the extent indicated in Paragraph 2.07) proposed adjustments in the Progress Schedule that will not result in changing the Contract Times. Such adjustments will comply with any provisions of the General Requirements applicable thereto.

2. Proposed adjustments in the Progress Schedule that will change the Contract Times shall be submitted in accordance with the requirements of Article 12. Adjustments in Contract Times may only be made by a Change Order.

6.05 *Substitutes and "Or-Equals"*

A. Whenever an item of material or equipment is specified or described in the Contract Documents by using the name of a proprietary item or the name of a particular Supplier, the specification or description is intended to establish the type, function, appearance, and quality required. Unless the specification or description contains or is followed by words reading that no like, equivalent, or "or-equal" item or no substitution is permitted, other items of material or equipment or material or equipment of other Suppliers may be submitted to Engineer for review under the circumstances described below.

1. *"Or-Equal" Items:* If in Engineer's sole discretion an item of material or equipment proposed by Contractor is functionally equal to that named and sufficiently similar so that no change in related Work will be required, it may be considered by Engineer as an "or-equal" item, in which case review and approval of the proposed item may, in Engineer's sole discretion, be accomplished without compliance with some or all of the requirements for approval of proposed substitute items. For the purposes of this Paragraph 6.05.A.1, a proposed item of material or equipment will be considered functionally equal to an item so named if:

a. in the exercise of reasonable judgment Engineer determines that:

1) it is at least equal in materials of construction, quality, durability, appearance, strength, and design characteristics;

2) it will reliably perform at least equally well the function and achieve the results imposed by the design concept of the completed Project as a functioning whole,

3) it has a proven record of performance and availability of responsive service; and

EJCDC C-700 Standard General Conditions of the Construction Contract.
Copyright © 2002 National Society of Professional Engineers for EJCDC. All rights reserved.

b. Contractor certifies that, if approved and incorporated into the Work:

1) there will be no increase in cost to the Owner or increase in Contract Times, and

2) it will conform substantially to the detailed requirements of the item named in the Contract Documents.

2. Substitute Items

a. If in Engineer's sole discretion an item of material or equipment proposed by Contractor does not qualify as an "or-equal" item under Paragraph 6.05.A.1, it will be considered a proposed substitute item.

b. Contractor shall submit sufficient information as provided below to allow Engineer to determine that the item of material or equipment proposed is essentially equivalent to that named and an acceptable substitute therefor. Requests for review of proposed substitute items of material or equipment will not be accepted by Engineer from anyone other than Contractor.

c. The requirements for review by Engineer will be as set forth in Paragraph 6.05.A.2.d, as supplemented in the General Requirements and as Engineer may decide is appropriate under the circumstances.

d. Contractor shall make written application to Engineer for review of a proposed substitute item of material or equipment that Contractor seeks to furnish or use. The application:

1) shall certify that the proposed substitute item will:

a) perform adequately the functions and achieve the results called for by the general design,

b) be similar in substance to that specified, and

c) be suited to the same use as that specified;

2) will state:

a) the extent, if any, to which the use of the proposed substitute item will prejudice Contractor's achievement of Substantial Completion on time;

b) whether or not use of the proposed substitute item in the Work will require a change in any of the Contract Documents (or in the provisions of any other direct contract with Owner for other work on the Project) to adapt the design to the proposed substitute item; and

c) whether or not incorporation or use of the proposed substitute item in connection with the Work is subject to payment of any license fee or royalty;

3) will identify:

a) all variations of the proposed substitute item from that specified , and

b) available engineering, sales, maintenance, repair, and replacement services;

4) and shall contain an itemized estimate of all costs or credits that will result directly or indirectly from use of such substitute item, including costs of redesign and claims of other contractors affected by any resulting change,

B. *Substitute Construction Methods or Procedures:* If a specific means, method, technique, sequence, or procedure of construction is expressly required by the Contract Documents, Contractor may furnish or utilize a substitute means, method, technique, sequence, or procedure of construction approved by Engineer. Contractor shall submit sufficient information to allow Engineer, in Engineer's sole discretion, to determine that the substitute proposed is equivalent to that expressly called for by the Contract Documents. The requirements for review by Engineer will be similar to those provided in Paragraph 6.05.A.2.

C. *Engineer's Evaluation:* Engineer will be allowed a reasonable time within which to evaluate each proposal or submittal made pursuant to Paragraphs 6.05.A and 6.05.B. Engineer may require Contractor to furnish additional data about the proposed substitute item. Engineer will be the sole judge of acceptability. No "or equal" or substitute will be ordered, installed or utilized until Engineer's review is complete, which will be evidenced by either a Change Order for a substitute or an approved Shop Drawing for an "or equal." Engineer will

EJCDC C-700 Standard General Conditions of the Construction Contract.
Copyright © 2002 National Society of Professional Engineers for EJCDC. All rights reserved.

advise Contractor in writing of any negative determination.

D. *Special Guarantee:* Owner may require Contractor to furnish at Contractor's expense a special performance guarantee or other surety with respect to any substitute.

E. *Engineer's Cost Reimbursement*: Engineer will record Engineer's costs in evaluating a substitute proposed or submitted by Contractor pursuant to Paragraphs 6.05.A.2 and 6.05.B Whether or not Engineer approves a substitute item so proposed or submitted by Contractor, Contractor shall reimburse Owner for the charges of Engineer for evaluating each such proposed substitute. Contractor shall also reimburse Owner for the charges of Engineer for making changes in the Contract Documents (or in the provisions of any other direct contract with Owner) resulting from the acceptance of each proposed substitute.

F. *Contractor's Expense*: Contractor shall provide all data in support of any proposed substitute or "or-equal" at Contractor's expense.

6.06 *Concerning Subcontractors, Suppliers, and Others*

A. Contractor shall not employ any Subcontractor, Supplier, or other individual or entity (including those acceptable to Owner as indicated in Paragraph 6.06.B), whether initially or as a replacement, against whom Owner may have reasonable objection. Contractor shall not be required to employ any Subcontractor, Supplier, or other individual or entity to furnish or perform any of the Work against whom Contractor has reasonable objection.

B. If the Supplementary Conditions require the identity of certain Subcontractors, Suppliers, or other individuals or entities to be submitted to Owner in advance for acceptance by Owner by a specified date prior to the Effective Date of the Agreement, and if Contractor has submitted a list thereof in accordance with the Supplementary Conditions, Owner's acceptance (either in writing or by failing to make written objection thereto by the date indicated for acceptance or objection in the Bidding Documents or the Contract Documents) of any such Subcontractor, Supplier, or other individual or entity so identified may be revoked on the basis of reasonable objection after due investigation. Contractor shall submit an acceptable replacement for the rejected Subcontractor, Supplier, or other individual or entity, and the Contract Price will be adjusted by the difference in the cost occasioned by such replacement, and an appropriate Change Order will be issued . No acceptance by Owner of any such Subcontractor, Supplier, or other individual or entity, whether initially or as a replacement, shall constitute a waiver of any right of Owner or Engineer to reject defective Work.

C. Contractor shall be fully responsible to Owner and Engineer for all acts and omissions of the Subcontractors, Suppliers, and other individuals or entities performing or furnishing any of the Work just as Contractor is responsible for Contractor's own acts and omissions. Nothing in the Contract Documents:

1. shall create for the benefit of any such Subcontractor, Supplier, or other individual or entity any contractual relationship between Owner or Engineer and any such Subcontractor, Supplier or other individual or entity, nor

2. shall anything in the Contract Documents create any obligation on the part of Owner or Engineer to pay or to see to the payment of any moneys due any such Subcontractor, Supplier, or other individual or entity except as may otherwise be required by Laws and Regulations.

D. Contractor shall be solely responsible for scheduling and coordinating the Work of Subcontractors, Suppliers, and other individuals or entities performing or furnishing any of the Work under a direct or indirect contract with Contractor.

E. Contractor shall require all Subcontractors, Suppliers, and such other individuals or entities performing or furnishing any of the Work to communicate with Engineer through Contractor.

F. The divisions and sections of the Specifications and the identifications of any Drawings shall not control Contractor in dividing the Work among Subcontractors or Suppliers or delineating the Work to be performed by any specific trade.

G. All Work performed for Contractor by a Subcontractor or Supplier will be pursuant to an appropriate agreement between Contractor and the Subcontractor or Supplier which specifically binds the Subcontractor or Supplier to the applicable terms and conditions of the Contract Documents for the benefit of Owner and Engineer. Whenever any such agreement is with a Subcontractor or Supplier who is listed as an additional insured on the property insurance provided in Paragraph 5.06, the agreement between the Contractor and the Subcontractor or Supplier will contain provisions whereby the Subcontractor or Supplier waives all rights against Owner, Contractor, and Engineer,, and all other

EJCDC C-700 Standard General Conditions of the Construction Contract.
Copyright © 2002 National Society of Professional Engineers for EJCDC. All rights reserved.

individuals or entities identified in the Supplementary Conditions to be listed as insureds or additional insureds (and the officers, directors, partners, employees, agents, consultants and subcontractors of each and any of them) for all losses and damages caused by, arising out of, relating to, or resulting from any of the perils or causes of loss covered by such policies and any other property insurance applicable to the Work. If the insurers on any such policies require separate waiver forms to be signed by any Subcontractor or Supplier, Contractor will obtain the same.

6.07 *Patent Fees and Royalties*

A. Contractor shall pay all license fees and royalties and assume all costs incident to the use in the performance of the Work or the incorporation in the Work of any invention, design, process, product, or device which is the subject of patent rights or copyrights held by others. If a particular invention, design, process, product, or device is specified in the Contract Documents for use in the performance of the Work and if to the actual knowledge of Owner or Engineer its use is subject to patent rights or copyrights calling for the payment of any license fee or royalty to others, the existence of such rights shall be disclosed by Owner in the Contract Documents.

B. To the fullest extent permitted by Laws and Regulations, Contractor shall indemnify and hold harmless Owner and Engineer, and the officers, directors, partners, employees, agents, consultants and subcontractors of each and any of them from and against all claims, costs, losses, and damages (including but not limited to all fees and charges of engineers, architects, attorneys, and other professionals and all court or arbitration or other dispute resolution costs) arising out of or relating to any infringement of patent rights or copyrights incident to the use in the performance of the Work or resulting from the incorporation in the Work of any invention, design, process, product, or device not specified in the Contract Documents.

6.08 *Permits*

A. Unless otherwise provided in the Supplementary Conditions, Contractor shall obtain and pay for all construction permits and licenses. Owner shall assist Contractor, when necessary, in obtaining such permits and licenses. Contractor shall pay all governmental charges and inspection fees necessary for the prosecution of the Work which are applicable at the time of opening of Bids, or, if there are no Bids, on the Effective Date of the Agreement. Owner shall pay all charges of utility owners for connections for providing permanent service to the Work.

6.09 *Laws and Regulations*

A. Contractor shall give all notices required by and shall comply with all Laws and Regulations applicable to the performance of the Work. Except where otherwise expressly required by applicable Laws and Regulations, neither Owner nor Engineer shall be responsible for monitoring Contractor's compliance with any Laws or Regulations.

B. If Contractor performs any Work knowing or having reason to know that it is contrary to Laws or Regulations, Contractor shall bear all claims, costs, losses, and damages (including but not limited to all fees and charges of engineers, architects, attorneys, and other professionals and all court or arbitration or other dispute resolution costs) arising out of or relating to such Work. However, it shall not be Contractor's primary responsibility to make certain that the Specifications and Drawings are in accordance with Laws and Regulations, but this shall not relieve Contractor of Contractor's obligations under Paragraph 3.03.

C. Changes in Laws or Regulations not known at the time of opening of Bids (or, on the Effective Date of the Agreement if there were no Bids) having an effect on the cost or time of performance of the Work shall be the subject of an adjustment in Contract Price or Contract Times. If Owner and Contractor are unable to agree on entitlement to or on the amount or extent, if any, of any such adjustment, a Claim may be made therefor as provided in Paragraph 10.05.

6.10 *Taxes*

A. Contractor shall pay all sales, consumer, use, and other similar taxes required to be paid by Contractor in accordance with the Laws and Regulations of the place of the Project which are applicable during the performance of the Work.

6.11 *Use of Site and Other Areas*

A. Limitation on Use of Site and Other Areas

EJCDC C-700 Standard General Conditions of the Construction Contract.
Copyright © 2002 National Society of Professional Engineers for EJCDC. All rights reserved.

1. Contractor shall confine construction equipment, the storage of materials and equipment, and the operations of workers to the Site and other areas permitted by Laws and Regulations, and shall not unreasonably encumber the Site and other areas with construction equipment or other materials or equipment. Contractor shall assume full responsibility for any damage to any such land or area, or to the owner or occupant thereof, or of any adjacent land or areas resulting from the performance of the Work.

2. Should any claim be made by any such owner or occupant because of the performance of the Work, Contractor shall promptly settle with such other party by negotiation or otherwise resolve the claim by arbitration or other dispute resolution proceeding or at law.

3. To the fullest extent permitted by Laws and Regulations, Contractor shall indemnify and hold harmless Owner and Engineer, and the officers, directors, partners, employees, agents, consultants and subcontractors of each and any of them from and against all claims, costs, losses, and damages (including but not limited to all fees and charges of engineers, architects, attorneys, and other professionals and all court or arbitration or other dispute resolution costs) arising out of or relating to any claim or action, legal or equitable, brought by any such owner or occupant against Owner, Engineer, or any other party indemnified hereunder to the extent caused by or based upon Contractor's performance of the Work.

B. *Removal of Debris During Performance of the Work:* During the progress of the Work Contractor shall keep the Site and other areas free from accumulations of waste materials, rubbish, and other debris. Removal and disposal of such waste materials, rubbish, and other debris shall conform to applicable Laws and Regulations.

C. *Cleaning:* Prior to Substantial Completion of the Work Contractor shall clean the Site and the Work and make it ready for utilization by Owner. At the completion of the Work Contractor shall remove from the Site all tools, appliances, construction equipment and machinery, and surplus materials and shall restore to original condition all property not designated for alteration by the Contract Documents.

D. *Loading Structures:* Contractor shall not load nor permit any part of any structure to be loaded in any manner that will endanger the structure, nor shall Contractor subject any part of the Work or adjacent property to stresses or pressures that will endanger it.

6.12 *Record Documents*

A. Contractor shall maintain in a safe place at the Site one record copy of all Drawings, Specifications, Addenda, Change Orders, Work Change Directives, Field Orders, and written interpretations and clarifications in good order and annotated to show changes made during construction. These record documents together with all approved Samples and a counterpart of all approved Shop Drawings will be available to Engineer for reference. Upon completion of the Work, these record documents, Samples, and Shop Drawings will be delivered to Engineer for Owner.

6.13 *Safety and Protection*

A. Contractor shall be solely responsible for initiating, maintaining and supervising all safety precautions and programs in connection with the Work. Contractor shall take all necessary precautions for the safety of, and shall provide the necessary protection to prevent damage, injury or loss to:

1. all persons on the Site or who may be affected by the Work;

2. all the Work and materials and equipment to be incorporated therein, whether in storage on or off the Site; and

3. other property at the Site or adjacent thereto, including trees, shrubs, lawns, walks, pavements, roadways, structures, utilities, and Underground Facilities not designated for removal, relocation, or replacement in the course of construction.

B. Contractor shall comply with all applicable Laws and Regulations relating to the safety of persons or property, or to the protection of persons or property from damage, injury, or loss; and shall erect and maintain all necessary safeguards for such safety and protection. Contractor shall notify owners of adjacent property and of Underground Facilities and other utility owners when prosecution of the Work may affect them, and shall cooperate with them in the protection, removal, relocation, and replacement of their property.

C. All damage, injury, or loss to any property referred to in Paragraph 6.13.A.2 or 6.13.A.3 caused, directly or indirectly, in whole or in part, by Contractor, any Subcontractor, Supplier, or any other individual or entity directly or indirectly employed by any of them to perform any of the Work, or anyone for whose acts any of them may be liable, shall be remedied by Contractor (except damage or loss attributable to the fault of Draw-

EJCDC C-700 Standard General Conditions of the Construction Contract.
Copyright © 2002 National Society of Professional Engineers for EJCDC. All rights reserved.

ings or Specifications or to the acts or omissions of Owner or Engineer or , or anyone employed by any of them, or anyone for whose acts any of them may be liable, and not attributable, directly or indirectly, in whole or in part, to the fault or negligence of Contractor or any Subcontractor, Supplier, or other individual or entity directly or indirectly employed by any of them).

D. Contractor's duties and responsibilities for safety and for protection of the Work shall continue until such time as all the Work is completed and Engineer has issued a notice to Owner and Contractor in accordance with Paragraph 14.07.B that the Work is acceptable (except as otherwise expressly provided in connection with Substantial Completion).

6.14 *Safety Representative*

A. Contractor shall designate a qualified and experienced safety representative at the Site whose duties and responsibilities shall be the prevention of accidents and the maintaining and supervising of safety precautions and programs.

6.15 *Hazard Communication Programs*

A. Contractor shall be responsible for coordinating any exchange of material safety data sheets or other hazard communication information required to be made available to or exchanged between or among employers at the Site in accordance with Laws or Regulations.

6.16 *Emergencies*

A. In emergencies affecting the safety or protection of persons or the Work or property at the Site or adjacent thereto, Contractor is obligated to act to prevent threatened damage, injury, or loss. Contractor shall give Engineer prompt written notice if Contractor believes that any significant changes in the Work or variations from the Contract Documents have been caused thereby or are required as a result thereof. If Engineer determines that a change in the Contract Documents is required because of the action taken by Contractor in response to such an emergency, a Work Change Directive or Change Order will be issued.

6.17 *Shop Drawings and Samples*

A. Contractor shall submit Shop Drawings and Samples to Engineer for review and approval in accordance with the acceptable Schedule of Submittals (as required by Paragraph 2.07). Each submittal will be identified as Engineer may require.

1. Shop Drawings

a. Submit number of copies specified in the General Requirements.

b. Data shown on the Shop Drawings will be complete with respect to quantities, dimensions, specified performance and design criteria, materials, and similar data to show Engineer the services, materials, and equipment Contractor proposes to provide and to enable Engineer to review the information for the limited purposes required by Paragraph 6.17.D.

2. *Samples:* Contractor shall also submit Samples to Engineer for review and approval in accordance with the acceptable schedule of Shop Drawings and Sample submittals.

a. Submit number of Samples specified in the Specifications.

b. Clearly identify each Sample as to material, Supplier, pertinent data such as catalog numbers, the use for which intended and other data as Engineer may require to enable Engineer to review the submittal for the limited purposes required by Paragraph 6.17.D.

B. Where a Shop Drawing or Sample is required by the Contract Documents or the Schedule of Submittals , any related Work performed prior to Engineer's review and approval of the pertinent submittal will be at the sole expense and responsibility of Contractor.

C. Submittal Procedures

1. Before submitting each Shop Drawing or Sample, Contractor shall have determined and verified:

a. all field measurements, quantities, dimensions, specified performance and design criteria, installation requirements, materials, catalog numbers, and similar information with respect thereto;

b. the suitability of all materials with respect to intended use, fabrication, shipping, handling, storage, assembly, and installation pertaining to the performance of the Work;

c. all information relative to Contractor's responsibilities for means, methods, techniques, sequences, and procedures of construction, and

EJCDC C-700 Standard General Conditions of the Construction Contract.
Copyright © 2002 National Society of Professional Engineers for EJCDC. All rights reserved.

safety precautions and programs incident thereto; and

d. shall also have reviewed and coordinated each Shop Drawing or Sample with other Shop Drawings and Samples and with the requirements of the Work and the Contract Documents.

2. Each submittal shall bear a stamp or specific written certification that Contractor has satisfied Contractor's obligations under the Contract Documents with respect to Contractor's review and approval of that submittal.

3. With each submittal, Contractor shall give Engineer specific written notice of any variations, that the Shop Drawing or Sample may have from the requirements of the Contract Documents. This notice shall be both a written communication separate from the Shop Drawing's or Sample Submittal; and, in addition, by a specific notation made on each Shop Drawing or Sample submitted to Engineer for review and approval of each such variation.

D. *Engineer's Review*

1. Engineer will provide timely review of Shop Drawings and Samples in accordance with the Schedule of Submittals acceptable to Engineer. Engineer's review and approval will be only to determine if the items covered by the submittals will, after installation or incorporation in the Work, conform to the information given in the Contract Documents and be compatible with the design concept of the completed Project as a functioning whole as indicated by the Contract Documents.

2. Engineer's review and approval will not extend to means, methods, techniques, sequences, or procedures of construction (except where a particular means, method, technique, sequence, or procedure of construction is specifically and expressly called for by the Contract Documents) or to safety precautions or programs incident thereto. The review and approval of a separate item as such will not indicate approval of the assembly in which the item functions.

3. Engineer's review and approval shall not relieve Contractor from responsibility for any variation from the requirements of the Contract Documents unless Contractor has complied with the requirements of Paragraph 6.17.C.3 and Engineer has given written approval of each such variation by specific written notation thereof incorporated in or accompanying the Shop Drawing or Sample. Engineer's review and approval shall not relieve Contractor from responsibility for complying with the requirements of Paragraph 6.17.C.1.

E. *Resubmittal Procedures*

1. Contractor shall make corrections required by Engineer and shall return the required number of corrected copies of Shop Drawings and submit, as required, new Samples for review and approval. Contractor shall direct specific attention in writing to revisions other than the corrections called for by Engineer on previous submittals.

6.18 *Continuing the Work*

A. Contractor shall carry on the Work and adhere to the Progress Schedule during all disputes or disagreements with Owner. No Work shall be delayed or postponed pending resolution of any disputes or disagreements, except as permitted by Paragraph 15.04 or as Owner and Contractor may otherwise agree in writing.

6.19 *Contractor's General Warranty and Guarantee*

A. Contractor warrants and guarantees to Owner that all Work will be in accordance with the Contract Documents and will not be defective. Engineer and its Related Entities shall be entitled to rely on representation of Contractor's warranty and guarantee.

B. Contractor's warranty and guarantee hereunder excludes defects or damage caused by:

1. abuse, modification, or improper maintenance or operation by persons other than Contractor, Subcontractors, Suppliers, or any other individual or entity for whom Contractor is responsible; or

2. normal wear and tear under normal usage.

C. Contractor's obligation to perform and complete the Work in accordance with the Contract Documents shall be absolute. None of the following will constitute an acceptance of Work that is not in accordance with the Contract Documents or a release of Contractor's obligation to perform the Work in accordance with the Contract Documents:

1. observations by Engineer;

EJCDC C-700 Standard General Conditions of the Construction Contract.
Copyright © 2002 National Society of Professional Engineers for EJCDC. All rights reserved.

2. recommendation by Engineer or payment by Owner of any progress or final payment;

3. the issuance of a certificate of Substantial Completion by Engineer or any payment related thereto by Owner;

4. use or occupancy of the Work or any part thereof by Owner;

5. any review and approval of a Shop Drawing or Sample submittal or the issuance of a notice of acceptability by Engineer;

6. any inspection, test, or approval by others; or

7. any correction of defective Work by Owner.

6.20 *Indemnification*

A. To the fullest extent permitted by Laws and Regulations, Contractor shall indemnify and hold harmless Owner and Engineer, and the officers, directors, partners, employees, agents, consultants and subcontractors of each and any of them from and against all claims, costs, losses, and damages (including but not limited to all fees and charges of engineers, architects, attorneys, and other professionals and all court or arbitration or other dispute resolution costs) arising out of or relating to the performance of the Work, provided that any such claim, cost, loss, or damage is attributable to bodily injury, sickness, disease, or death, or to injury to or destruction of tangible property (other than the Work itself), including the loss of use resulting therefrom but only to the extent caused by any negligent act or omission of Contractor, any Subcontractor, any Supplier, or any individual or entity directly or indirectly employed by any of them to perform any of the Work or anyone for whose acts any of them may be liable .

B. In any and all claims against Owner or Engineer or any of their respective consultants, agents, officers, directors, partners, or employees by any employee (or the survivor or personal representative of such employee) of Contractor, any Subcontractor, any Supplier, or any individual or entity directly or indirectly employed by any of them to perform any of the Work, or anyone for whose acts any of them may be liable, the indemnification obligation under Paragraph 6.20.A shall not be limited in any way by any limitation on the amount or type of damages, compensation, or benefits payable by or for Contractor or any such Subcontractor, Supplier, or other individual or entity under workers' compensation acts, disability benefit acts, or other employee benefit acts.

C. The indemnification obligations of Contractor under Paragraph 6.20.A shall not extend to the liability of Engineer and Engineer's officers, directors, partners, employees, agents, consultants and subcontractors arising out of:

1. the preparation or approval of, or the failure to prepare or approve, maps, Drawings, opinions, reports, surveys, Change Orders, designs, or Specifications; or

2. giving directions or instructions, or failing to give them, if that is the primary cause of the injury or damage.

6.21 *Delegation of Professional Design Services*

A. Contractor will not be required to provide professional design services unless such services are specifically required by the Contract Documents for a portion of the Work or unless such services are required to carry out Contractor's responsibilities for construction means, methods, techniques, sequences and procedures. Contractor shall not be required to provide professional services in violation of applicable law.

B. If professional design services or certifications by a design professional related to systems, materials or equipment are specifically required of Contractor by the Contract Documents, Owner and Engineer will specify all performance and design criteria that such services must satisfy. Contractor shall cause such services or certifications to be provided by a properly licensed professional, whose signature and seal shall appear on all drawings, calculations, specifications, certifications, Shop Drawings and other submittals prepared by such professional. Shop Drawings and other submittals related to the Work designed or certified by such professional, if prepared by others, shall bear such professional's written approval when submitted to Engineer.

C. Owner and Engineer shall be entitled to rely upon the adequacy, accuracy and completeness of the services, certifications or approvals performed by such design professionals, provided Owner and Engineer have specified to Contractor all performance and design criteria that such services must satisfy.

D. Pursuant to this Paragraph 6.21, Engineer's review and approval of design calculations and design drawings will be only for the limited purpose of checking for conformance with performance and design criteria

EJCDC C-700 Standard General Conditions of the Construction Contract.
Copyright © 2002 National Society of Professional Engineers for EJCDC. All rights reserved.

given and the design concept expressed in the Contract Documents. Engineer's review and approval of Shop Drawings and other submittals (except design calculations and design drawings) will be only for the purpose stated in Paragraph 6.17.D.1.

E. Contractor shall not be responsible for the adequacy of the performance or design criteria required by the Contract Documents.

ARTICLE 7 - OTHER WORK AT THE SITE

7.01 *Related Work at Site*

A. Owner may perform other work related to the Project at the Site with Owner's employees, or via other direct contracts therefor, or have other work performed by utility owners. If such other work is not noted in the Contract Documents, then:

1. written notice thereof will be given to Contractor prior to starting any such other work; and

2. if Owner and Contractor are unable to agree on entitlement to or on the amount or extent, if any, of any adjustment in the Contract Price or Contract Times that should be allowed as a result of such other work, a Claim may be made therefor as provided in Paragraph 10.05.

B. Contractor shall afford each other contractor who is a party to such a direct contract, each utility owner and Owner, if Owner is performing other work with Owner's employees, proper and safe access to the Site, a reasonable opportunity for the introduction and storage of materials and equipment and the execution of such other work, and shall properly coordinate the Work with theirs. Contractor shall do all cutting, fitting, and patching of the Work that may be required to properly connect or otherwise make its several parts come together and properly integrate with such other work. Contractor shall not endanger any work of others by cutting, excavating, or otherwise altering their work and will only cut or alter their work with the written consent of Engineer and the others whose work will be affected. The duties and responsibilities of Contractor under this Paragraph are for the benefit of such utility owners and other contractors to the extent that there are comparable provisions for the benefit of Contractor in said direct contracts between Owner and such utility owners and other contractors.

C. If the proper execution or results of any part of Contractor's Work depends upon work performed by others under this Article 7, Contractor shall inspect such other work and promptly report to Engineer in writing any delays, defects, or deficiencies in such other work that render it unavailable or unsuitable for the proper execution and results of Contractor's Work. Contractor's failure to so report will constitute an acceptance of such other work as fit and proper for integration with Contractor's Work except for latent defects and deficiencies in such other work.

7.02 *Coordination*

A. If Owner intends to contract with others for the performance of other work on the Project at the Site, the following will be set forth in Supplementary Conditions:

1. the individual or entity who will have authority and responsibility for coordination of the activities among the various contractors will be identified;

2. the specific matters to be covered by such authority and responsibility will be itemized; and

3. the extent of such authority and responsibilities will be provided.

B. Unless otherwise provided in the Supplementary Conditions, Owner shall have sole authority and responsibility for such coordination.

7.03 *Legal Relationships*

A. Paragraphs 7.01.A and 7.02 are not applicable for utilities not under the control of Owner.

B. Each other direct contract of Owner under Paragraph 7.01.A shall provide that the other contractor is liable to Owner and Contractor for the reasonable direct delay and disruption costs incurred by Contractor as a result of the other contractor's actions or inactions.

C. Contractor shall be liable to Owner and any other contractor for the reasonable direct delay and disruption costs incurred by such other contractor as a result of Contractor's action or inactions.

EJCDC C-700 Standard General Conditions of the Construction Contract.
Copyright © 2002 National Society of Professional Engineers for EJCDC. All rights reserved.

ARTICLE 8 - OWNER'S RESPONSIBILITIES

8.01 *Communications to Contractor*

A. Except as otherwise provided in these General Conditions, Owner shall issue all communications to Contractor through Engineer.

8.02 *Replacement of Engineer*

A. In case of termination of the employment of Engineer, Owner shall appoint an engineer to whom Contractor makes no reasonable objection, whose status under the Contract Documents shall be that of the former Engineer.

8.03 *Furnish Data*

A. Owner shall promptly furnish the data required of Owner under the Contract Documents.

8.04 *Pay When Due*

A. Owner shall make payments to Contractor when they are due as provided in Paragraphs 14.02.C and 14.07.C.

8.05 *Lands and Easements; Reports and Tests*

A. Owner's duties in respect of providing lands and easements and providing engineering surveys to establish reference points are set forth in Paragraphs 4.01 and 4.05. Paragraph 4.02 refers to Owner's identifying and making available to Contractor copies of reports of explorations and tests of subsurface conditions and drawings of physical conditions in or relating to existing surface or subsurface structures at or contiguous to the Site that have been utilized by Engineer in preparing the Contract Documents.

8.06 *Insurance*

A. Owner's responsibilities, if any, in respect to purchasing and maintaining liability and property insurance are set forth in Article 5.

8.07 *Change Orders*

A. Owner is obligated to execute Change Orders as indicated in Paragraph 10.03.

8.08 *Inspections, Tests, and Approvals*

A. Owner's responsibility in respect to certain inspections, tests, and approvals is set forth in Paragraph 13.03.B.

8.09 *Limitations on Owner's Responsibilities*

A. The Owner shall not supervise, direct, or have control or authority over, nor be responsible for, Contractor's means, methods, techniques, sequences, or procedures of construction, or the safety precautions and programs incident thereto, or for any failure of Contractor to comply with Laws and Regulations applicable to the performance of the Work. Owner will not be responsible for Contractor's failure to perform the Work in accordance with the Contract Documents.

8.10 *Undisclosed Hazardous Environmental Condition*

A. Owner's responsibility in respect to an undisclosed Hazardous Environmental Condition is set forth in Paragraph 4.06.

8.11 *Evidence of Financial Arrangements*

A. If and to the extent Owner has agreed to furnish Contractor reasonable evidence that financial arrangements have been made to satisfy Owner's obligations under the Contract Documents, Owner's responsibility in respect thereof will be as set forth in the Supplementary Conditions.

ARTICLE 9 - ENGINEER'S STATUS DURING CONSTRUCTION

9.01 *Owner's Representative*

A. Engineer will be Owner's representative during the construction period. The duties and responsibilities and the limitations of authority of Engineer as Owner's representative during construction are set forth in the Contract Documents and will not be changed without written consent of Owner and Engineer.

9.02 *Visits to Site*

A. Engineer will make visits to the Site at intervals appropriate to the various stages of construction as Engineer deems necessary in order to observe as an experienced and qualified design professional the progress that has been made and the quality of the various aspects of Contractor's executed Work. Based on

EJCDC C-700 Standard General Conditions of the Construction Contract.
Copyright © 2002 National Society of Professional Engineers for EJCDC. All rights reserved.

information obtained during such visits and observations, Engineer, for the benefit of Owner, will determine, in general, if the Work is proceeding in accordance with the Contract Documents. Engineer will not be required to make exhaustive or continuous inspections on the Site to check the quality or quantity of the Work. Engineer's efforts will be directed toward providing for Owner a greater degree of confidence that the completed Work will conform generally to the Contract Documents. On the basis of such visits and observations, Engineer will keep Owner informed of the progress of the Work and will endeavor to guard Owner against defective Work.

B. Engineer's visits and observations are subject to all the limitations on Engineer's authority and responsibility set forth in Paragraph 9.09. Particularly, but without limitation, during or as a result of Engineer's visits or observations of Contractor's Work Engineer will not supervise, direct, control, or have authority over or be responsible for Contractor's means, methods, techniques, sequences, or procedures of construction, or the safety precautions and programs incident thereto, or for any failure of Contractor to comply with Laws and Regulations applicable to the performance of the Work.

9.03 *Project Representative*

A. If Owner and Engineer agree, Engineer will furnish a Resident Project Representative to assist Engineer in providing more extensive observation of the Work. The authority and responsibilities of any such Resident Project Representative and assistants will be as provided in the Supplementary Conditions, and limitations on the responsibilities thereof will be as provided in Paragraph 9.09. If Owner designates another representative or agent to represent Owner at the Site who is not Engineer's consultant, agent or employee, the responsibilities and authority and limitations thereon of such other individual or entity will be as provided in the Supplementary Conditions.

9.04 *Authorized Variations in Work*

A. Engineer may authorize minor variations in the Work from the requirements of the Contract Documents which do not involve an adjustment in the Contract Price or the Contract Times and are compatible with the design concept of the completed Project as a functioning whole as indicated by the Contract Documents. These may be accomplished by a Field Order and will be binding on Owner and also on Contractor, who shall perform the Work involved promptly. If Owner or Contractor believes that a Field Order justifies an adjustment in the Contract Price or Contract Times, or both, and the parties are unable to agree on entitlement to or on the amount or extent, if any, of any such adjustment , a Claim may be made therefor as provided in Paragraph 10.05.

9.05 *Rejecting Defective Work*

A. Engineer will have authority to reject Work which Engineer believes to be defective, or that Engineer believes will not produce a completed Project that conforms to the Contract Documents or that will prejudice the integrity of the design concept of the completed Project as a functioning whole as indicated by the Contract Documents. Engineer will also have authority to require special inspection or testing of the Work as provided in Paragraph 13.04, whether or not the Work is fabricated, installed, or completed.

9.06 *Shop Drawings, Change Orders and Payments*

A. In connection with Engineer's authority, and limitations thereof, as to Shop Drawings and Samples, see Paragraph 6.17.

B. In connection with Engineer's authority, and limitations thereof, as to design calculations and design drawings submitted in response to a delegation of professional design services, if any, see Paragraph 6.21.

C. In connection with Engineer's authority as to Change Orders, see Articles 10, 11, and 12.

D. In connection with Engineer's authority as to Applications for Payment, see Article 14.

9.07 *Determinations for Unit Price Work*

A. Engineer will determine the actual quantities and classifications of Unit Price Work performed by Contractor. Engineer will review with Contractor the Engineer's preliminary determinations on such matters before rendering a written decision thereon (by recommendation of an Application for Payment or otherwise). Engineer's written decision thereon will be final and binding (except as modified by Engineer to reflect changed factual conditions or more accurate data) upon Owner and Contractor, subject to the provisions of Paragraph 10.05.

9.08 *Decisions on Requirements of Contract Documents and Acceptability of Work*

A. Engineer will be the initial interpreter of the requirements of the Contract Documents and judge of the acceptability of the Work thereunder. All matters in question and other matters between Owner and Contractor arising prior to the date final payment is due relating to the acceptability of the Work, and the interpretation of the

EJCDC C-700 Standard General Conditions of the Construction Contract.
Copyright © 2002 National Society of Professional Engineers for EJCDC. All rights reserved.

requirements of the Contract Documents pertaining to the performance of the Work, will be referred initially to Engineer in writing within 30 days of the event giving rise to the question

B. Engineer will, with reasonable promptness, render a written decision on the issue referred. If Owner or Contractor believe that any such decision entitles them to an adjustment in the Contract Price or Contract Times or both, a Claim may be made under Paragraph 10.05. The date of Engineer's decision shall be the date of the event giving rise to the issues referenced for the purposes of Paragraph 10.05.B.

C. Engineer's written decision on the issue referred will be final and binding on Owner and Contractor, subject to the provisions of Paragraph 10.05.

D. When functioning as interpreter and judge under this Paragraph 9.08, Engineer will not show partiality to Owner or Contractor and will not be liable in connection with any interpretation or decision rendered in good faith in such capacity.

9.09 *Limitations on Engineer's Authority and Responsibilities*

A. Neither Engineer's authority or responsibility under this Article 9 or under any other provision of the Contract Documents nor any decision made by Engineer in good faith either to exercise or not exercise such authority or responsibility or the undertaking, exercise, or performance of any authority or responsibility by Engineer shall create, impose, or give rise to any duty in contract, tort, or otherwise owed by Engineer to Contractor, any Subcontractor, any Supplier, any other individual or entity, or to any surety for or employee or agent of any of them.

B. Engineer will not supervise, direct, control, or have authority over or be responsible for Contractor's means, methods, techniques, sequences, or procedures of construction, or the safety precautions and programs incident thereto, or for any failure of Contractor to comply with Laws and Regulations applicable to the performance of the Work. Engineer will not be responsible for Contractor's failure to perform the Work in accordance with the Contract Documents.

C. Engineer will not be responsible for the acts or omissions of Contractor or of any Subcontractor, any Supplier, or of any other individual or entity performing any of the Work.

D. Engineer's review of the final Application for Payment and accompanying documentation and all maintenance and operating instructions, schedules, guarantees, bonds, certificates of inspection, tests and approvals, and other documentation required to be delivered by Paragraph 14.07.A will only be to determine generally that their content complies with the requirements of, and in the case of certificates of inspections, tests, and approvals that the results certified indicate compliance with the Contract Documents.

E. The limitations upon authority and responsibility set forth in this Paragraph 9.09 shall also apply to, the Resident Project Representative, if any, and assistants, if any.

ARTICLE 10 - CHANGES IN THE WORK; CLAIMS

10.01 *Authorized Changes in the Work*

A. Without invalidating the Contract and without notice to any surety, Owner may, at any time or from time to time, order additions, deletions, or revisions in the Work by a Change Order, or a Work Change Directive. Upon receipt of any such document, Contractor shall promptly proceed with the Work involved which will be performed under the applicable conditions of the Contract Documents (except as otherwise specifically provided).

B. If Owner and Contractor are unable to agree on entitlement to, or on the amount or extent, if any, of an adjustment in the Contract Price or Contract Times, or both, that should be allowed as a result of a Work Change Directive, a Claim may be made therefor as provided in Paragraph 10.05.

10.02 *Unauthorized Changes in the Work*

A.Contractor shall not be entitled to an increase in the Contract Price or an extension of the Contract Times with respect to any work performed that is not required by the Contract Documents as amended, modified, or supplemented as provided in Paragraph 3.04, except in the case of an emergency as provided in Paragraph 6.16 or in the case of uncovering Work as provided in Paragraph 13.04.B.

10.03 *Execution of Change Orders*

A. Owner and Contractor shall execute appropriate Change Orders recommended by Engineer covering:

1. changes in the Work which are: (i) ordered by Owner pursuant to Paragraph 10.01.A, (ii) required because of acceptance of defective Work under Paragraph

EJCDC C-700 Standard General Conditions of the Construction Contract.
Copyright © 2002 National Society of Professional Engineers for EJCDC. All rights reserved.

13.08.A or Owner's correction of defective Work under Paragraph 13.09, or (iii) agreed to by the parties;

2. changes in the Contract Price or Contract Times which are agreed to by the parties, including any undisputed sum or amount of time for Work actually performed in accordance with a Work Change Directive; and

3. changes in the Contract Price or Contract Times which embody the substance of any written decision rendered by Engineer pursuant to Paragraph 10.05; provided that, in lieu of executing any such Change Order, an appeal may be taken from any such decision in accordance with the provisions of the Contract Documents and applicable Laws and Regulations, but during any such appeal, Contractor shall carry on the Work and adhere to the Progress Schedule as provided in Paragraph 6.18.A.

10.04 *Notification to Surety*

A. If notice of any change affecting the general scope of the Work or the provisions of the Contract Documents (including, but not limited to, Contract Price or Contract Times) is required by the provisions of any bond to be given to a surety, the giving of any such notice will be Contractor's responsibility. The amount of each applicable bond will be adjusted to reflect the effect of any such change.

10.05 *Claims*

A. *Engineer's Decision Required*: All Claims, except those waived pursuant to Paragraph 14.09, shall be referred to the Engineer for decision. A decision by Engineer shall be required as a condition precedent to any exercise by Owner or Contractor of any rights or remedies either may otherwise have under the Contract Documents or by Laws and Regulations in respect of such Claims.

B. *Notice:* Written notice stating the general nature of each Claim, shall be delivered by the claimant to Engineer and the other party to the Contract promptly (but in no event later than 30 days) after the start of the event giving rise thereto. The responsibility to substantiate a Claim shall rest with the party making the Claim. Notice of the amount or extent of the Claim, with supporting data shall be delivered to the Engineer and the other party to the Contract within 60 days after the start of such event (unless Engineer allows additional time for claimant to submit additional or more accurate data in support of such Claim). A Claim for an adjustment in Contract Price shall be prepared in accordance with the provisions of Paragraph 12.01.B. A Claim for an adjustment in Contract Time shall be prepared in accordance with the provisions of Paragraph 12.02.B. Each Claim shall be accompanied by claimant's written statement that the adjustment claimed is the entire adjustment to which the claimant believes it is entitled as a result of said event. The opposing party shall submit any response to Engineer and the claimant within 30 days after receipt of the claimant's last submittal (unless Engineer allows additional time).

C. *Engineer's Action*: Engineer will review each Claim and, within 30 days after receipt of the last submittal of the claimant or the last submittal of the opposing party, if any, take one of the following actions in writing:

1. deny the Claim in whole or in part,

2. approve the Claim, or

3. notify the parties that the Engineer is unable to resolve the Claim if, in the Engineer's sole discretion, it would be inappropriate for the Engineer to do so. For purposes of further resolution of the Claim, such notice shall be deemed a denial.

D. In the event that Engineer does not take action on a Claim within said 30 days, the Claim shall be deemed denied.

E. Engineer's written action under Paragraph 10.05.C or denial pursuant to Paragraphs 10.05.C.3 or 10.05.D will be final and binding upon Owner and Contractor, unless Owner or Contractor invoke the dispute resolution procedure set forth in Article 16 within 30 days of such action or denial.

F. No Claim for an adjustment in Contract Price or Contract Times will be valid if not submitted in accordance with this Paragraph 10.05.

ARTICLE 11 - COST OF THE WORK; ALLOWANCES; UNIT PRICE WORK

11.01 *Cost of the Work*

A. *Costs Included:* The term Cost of the Work means the sum of all costs, except those excluded in Paragraph 11.01.B, necessarily incurred and paid by Contractor in the proper performance of the Work. When the value of any Work covered by a Change Order or when a Claim for an adjustment in Contract Price is determined on the basis of Cost of the Work, the costs to be reimbursed to Contractor will be only those additional

EJCDC C-700 Standard General Conditions of the Construction Contract.
Copyright © 2002 National Society of Professional Engineers for EJCDC. All rights reserved.

or incremental costs required because of the change in the Work or because of the event giving rise to the Claim. Except as otherwise may be agreed to in writing by Owner, such costs shall be in amounts no higher than those prevailing in the locality of the Project, shall include only the following items, and shall not include any of the costs itemized in Paragraph 11.01.B.

1. Payroll costs for employees in the direct employ of Contractor in the performance of the Work under schedules of job classifications agreed upon by Owner and Contractor. Such employees shall include, without limitation, superintendents, foremen, and other personnel employed full time at the Site. Payroll costs for employees not employed full time on the Work shall be apportioned on the basis of their time spent on the Work. Payroll costs shall include, but not be limited to, salaries and wages plus the cost of fringe benefits, which shall include social security contributions, unemployment, excise, and payroll taxes, workers' compensation, health and retirement benefits, bonuses, sick leave, vacation and holiday pay applicable thereto. The expenses of performing Work outside of regular working hours, on Saturday, Sunday, or legal holidays, shall be included in the above to the extent authorized by Owner.

2. Cost of all materials and equipment furnished and incorporated in the Work, including costs of transportation and storage thereof, and Suppliers' field services required in connection therewith. All cash discounts shall accrue to Contractor unless Owner deposits funds with Contractor with which to make payments, in which case the cash discounts shall accrue to Owner. All trade discounts, rebates and refunds and returns from sale of surplus materials and equipment shall accrue to Owner, and Contractor shall make provisions so that they may be obtained.

3. Payments made by Contractor to Subcontractors for Work performed by Subcontractors. If required by Owner, Contractor shall obtain competitive bids from subcontractors acceptable to Owner and Contractor and shall deliver such bids to Owner, who will then determine, with the advice of Engineer, which bids, if any, will be acceptable. If any subcontract provides that the Subcontractor is to be paid on the basis of Cost of the Work plus a fee, the Subcontractor's Cost of the Work and fee shall be determined in the same manner as Contractor's Cost of the Work and fee as provided in this Paragraph 11.01.

4. Costs of special consultants (including but not limited to Engineers, architects, testing laboratories, surveyors, attorneys, and accountants) employed for services specifically related to the Work.

5. Supplemental costs including the following:

a. The proportion of necessary transportation, travel, and subsistence expenses of Contractor's employees incurred in discharge of duties connected with the Work.

b. Cost, including transportation and maintenance, of all materials, supplies, equipment, machinery, appliances, office, and temporary facilities at the Site, and hand tools not owned by the workers, which are consumed in the performance of the Work, and cost, less market value, of such items used but not consumed which remain the property of Contractor.

c. Rentals of all construction equipment and machinery, and the parts thereof whether rented from Contractor or others in accordance with rental agreements approved by Owner with the advice of Engineer, and the costs of transportation, loading, unloading, assembly, dismantling, and removal thereof. All such costs shall be in accordance with the terms of said rental agreements. The rental of any such equipment, machinery, or parts shall cease when the use thereof is no longer necessary for the Work.

d. Sales, consumer, use, and other similar taxes related to the Work, and for which Contractor is liable, imposed by Laws and Regulations.

e. Deposits lost for causes other than negligence of Contractor, any Subcontractor, or anyone directly or indirectly employed by any of them or for whose acts any of them may be liable, and royalty payments and fees for permits and licenses.

f. Losses and damages (and related expenses) caused by damage to the Work, not compensated by insurance or otherwise, sustained by Contractor in connection with the performance of the Work (except losses and damages within the deductible amounts of property insurance established in accordance with Paragraph 5.06.D), provided such losses and damages have resulted from causes other than the negligence of Contractor, any Subcontractor, or anyone directly or indirectly employed by any of them or for whose acts any of them may be liable. Such losses shall include settlements made with the written consent and approval of Owner. No such

EJCDC C-700 Standard General Conditions of the Construction Contract.
Copyright © 2002 National Society of Professional Engineers for EJCDC. All rights reserved.

losses, damages, and expenses shall be included in the Cost of the Work for the purpose of determining Contractor's fee.

g. The cost of utilities, fuel, and sanitary facilities at the Site.

h. Minor expenses such as telegrams, long distance telephone calls, telephone service at the Site, expresses, and similar petty cash items in connection with the Work.

i. The costs of premiums for all bonds and insurance Contractor is required by the Contract Documents to purchase and maintain.

B. *Costs Excluded:* The term Cost of the Work shall not include any of the following items:

1. Payroll costs and other compensation of Contractor's officers, executives, principals (of partnerships and sole proprietorships), general managers, safety managers, engineers, architects, estimators, attorneys, auditors, accountants, purchasing and contracting agents, expediters, timekeepers, clerks, and other personnel employed by Contractor, whether at the Site or in Contractor's principal or branch office for general administration of the Work and not specifically included in the agreed upon schedule of job classifications referred to in Paragraph 11.01.A.1 or specifically covered by Paragraph 11.01.A.4, all of which are to be considered administrative costs covered by the Contractor's fee.

2. Expenses of Contractor's principal and branch offices other than Contractor's office at the Site.

3. Any part of Contractor's capital expenses, including interest on Contractor's capital employed for the Work and charges against Contractor for delinquent payments.

4. Costs due to the negligence of Contractor, any Subcontractor, or anyone directly or indirectly employed by any of them or for whose acts any of them may be liable, including but not limited to, the correction of defective Work, disposal of materials or equipment wrongly supplied, and making good any damage to property.

5. Other overhead or general expense costs of any kind and the costs of any item not specifically and expressly included in Paragraphs 11.01.A and 11.01.B.

C. *Contractor's Fee:* When all the Work is performed on the basis of cost-plus, Contractor's fee shall be determined as set forth in the Agreement. When the value of any Work covered by a Change Order or when a Claim for an adjustment in Contract Price is determined on the basis of Cost of the Work, Contractor's fee shall be determined as set forth in Paragraph 12.01.C.

D. *Documentation:* Whenever the Cost of the Work for any purpose is to be determined pursuant to Paragraphs 11.01.A and 11.01.B, Contractor will establish and maintain records thereof in accordance with generally accepted accounting practices and submit in a form acceptable to Engineer an itemized cost breakdown together with supporting data.

11.02 *Allowances*

A. It is understood that Contractor has included in the Contract Price all allowances so named in the Contract Documents and shall cause the Work so covered to be performed for such sums and by such persons or entities as may be acceptable to Owner and Engineer.

B. *Cash Allowances*

1. Contractor agrees that:

a. the cash allowances include the cost to Contractor (less any applicable trade discounts) of materials and equipment required by the allowances to be delivered at the Site, and all applicable taxes; and

b. Contractor's costs for unloading and handling on the Site, labor, installation , overhead, profit, and other expenses contemplated for the cash allowances have been included in the Contract Price and not in the allowances, and no demand for additional payment on account of any of the foregoing will be valid.

C. Contingency Allowance

1. Contractor agrees that a contingency allowance, if any, is for the sole use of Owner to cover unanticipated costs.

D. Prior to final payment, an appropriate Change Order will be issued as recommended by Engineer to reflect actual amounts due Contractor on account of Work covered by allowances, and the Contract Price shall be correspondingly adjusted.

EJCDC C-700 Standard General Conditions of the Construction Contract.
Copyright © 2002 National Society of Professional Engineers for EJCDC. All rights reserved.

11.03 *Unit Price Work*

A. Where the Contract Documents provide that all or part of the Work is to be Unit Price Work, initially the Contract Price will be deemed to include for all Unit Price Work an amount equal to the sum of the unit price for each separately identified item of Unit Price Work times the estimated quantity of each item as indicated in the Agreement.

B. The estimated quantities of items of Unit Price Work are not guaranteed and are solely for the purpose of comparison of Bids and determining an initial Contract Price. Determinations of the actual quantities and classifications of Unit Price Work performed by Contractor will be made by Engineer subject to the provisions of Paragraph 9.07.

C. Each unit price will be deemed to include an amount considered by Contractor to be adequate to cover Contractor's overhead and profit for each separately identified item.

D. Owner or Contractor may make a Claim for an adjustment in the Contract Price in accordance with Paragraph 10.05 if:

1. the quantity of any item of Unit Price Work performed by Contractor differs materially and significantly from the estimated quantity of such item indicated in the Agreement; and

2. there is no corresponding adjustment with respect any other item of Work; and

3. Contractor believes that Contractor is entitled to an increase in Contract Price as a result of having incurred additional expense or Owner believes that Owner is entitled to a decrease in Contract Price and the parties are unable to agree as to the amount of any such increase or decrease.

ARTICLE 12 - CHANGE OF CONTRACT PRICE; CHANGE OF CONTRACT TIMES

12.01 *Change of Contract Price*

A. The Contract Price may only be changed by a Change Order. Any Claim for an adjustment in the Contract Price shall be based on written notice submitted by the party making the Claim to the Engineer and the other party to the Contract in accordance with the provisions of Paragraph 10.05.

B. The value of any Work covered by a Change Order or of any Claim for an adjustment in the Contract Price will be determined as follows:

1. where the Work involved is covered by unit prices contained in the Contract Documents, by application of such unit prices to the quantities of the items involved (subject to the provisions of Paragraph 11.03); or

2. where the Work involved is not covered by unit prices contained in the Contract Documents, by a mutually agreed lump sum (which may include an allowance for overhead and profit not necessarily in accordance with Paragraph 12.01.C.2); or

3. where the Work involved is not covered by unit prices contained in the Contract Documents and agreement to a lump sum is not reached under Paragraph 12.01.B.2, on the basis of the Cost of the Work (determined as provided in Paragraph 11.01) plus a Contractor's fee for overhead and profit (determined as provided in Paragraph 12.01.C).

C. *Contractor's Fee:* The Contractor's fee for overhead and profit shall be determined as follows:

1. a mutually acceptable fixed fee; or

2. if a fixed fee is not agreed upon, then a fee based on the following percentages of the various portions of the Cost of the Work:

a. for costs incurred under Paragraphs 11.01.A.1 and 11.01.A.2, the Contractor's fee shall be 15 percent;

b. for costs incurred under Paragraph 11.01.A.3, the Contractor's fee shall be five percent;

c. where one or more tiers of subcontracts are on the basis of Cost of the Work plus a fee and no fixed fee is agreed upon, the intent of Paragraph 12.01.C.2.a is that the Subcontractor who actually performs the Work, at whatever tier, will be paid a fee of 15 percent of the costs incurred by such Subcontractor under Paragraphs 11.01.A.1 and 11.01.A.2 and that any higher tier Subcontractor and Contractor will each be paid a fee of five percent of the amount paid to the next lower tier Subcontractor;

EJCDC C-700 Standard General Conditions of the Construction Contract.
Copyright © 2002 National Society of Professional Engineers for EJCDC. All rights reserved.

d. no fee shall be payable on the basis of costs itemized under Paragraphs 11.01.A.4, 11.01.A.5, and 11.01.B;

e. the amount of credit to be allowed by Contractor to Owner for any change which results in a net decrease in cost will be the amount of the actual net decrease in cost plus a deduction in Contractor's fee by an amount equal to five percent of such net decrease; and

f. when both additions and credits are involved in any one change, the adjustment in Contractor's fee shall be computed on the basis of the net change in accordance with Paragraphs 12.01.C.2.a through 12.01.C.2.e, inclusive.

12.02 *Change of Contract Times*

A. The Contract Times may only be changed by a Change Order. Any Claim for an adjustment in the Contract Times shall be based on written notice submitted by the party making the Claim to the Engineer and the other party to the Contract in accordance with the provisions of Paragraph 10.05.

B. Any adjustment of the Contract Times covered by a Change Order or any Claim for an adjustment in the Contract Times will be determined in accordance with the provisions of this Article 12.

12.03 *Delays*

A. Where Contractor is prevented from completing any part of the Work within the Contract Times due to delay beyond the control of Contractor, the Contract Times will be extended in an amount equal to the time lost due to such delay if a Claim is made therefor as provided in Paragraph 12.02.A. Delays beyond the control of Contractor shall include, but not be limited to, acts or neglect by Owner, acts or neglect of utility owners or other contractors performing other work as contemplated by Article 7, fires, floods, epidemics, abnormal weather conditions, or acts of God.

B. If Owner, Engineer, or other contractors or utility owners performing other work for Owner as contemplated by Article 7, or anyone for whom Owner is responsible, delays, disrupts, or interferes with the performance or progress of the Work, then Contractor shall be entitled to an equitable adjustment in the Contract Price or the Contract Times , or both. Contractor's entitlement to an adjustment of the Contract Times is conditioned on such adjustment being essential to Contractor's ability to complete the Work within the Contract Times.

C If Contractor is delayed in the performance or progress of the Work by fire, flood, epidemic, abnormal weather conditions, acts of God, acts or failures to act of utility owners not under the control of Owner, or other causes not the fault of and beyond control of Owner and Contractor, then Contractor shall be entitled to an equitable adjustment in Contract Times, if such adjustment is essential to Contractor's ability to complete the Work within the Contract Times. Such an adjustment shall be Contractor's sole and exclusive remedy for the delays described in this Paragraph 12.03.C.

D. Owner, Engineer and the Related Entities of each of them shall not be liable to Contractor for any claims, costs, losses, or damages (including but not limited to all fees and charges of Engineers, architects, attorneys, and other professionals and all court or arbitration or other dispute resolution costs) sustained by Contractor on or in connection with any other project or anticipated project.

E. Contractor shall not be entitled to an adjustment in Contract Price or Contract Times for delays within the control of Contractor. Delays attributable to and within the control of a Subcontractor or Supplier shall be deemed to be delays within the control of Contractor.

ARTICLE 13 - TESTS AND INSPECTIONS; CORRECTION, REMOVAL OR ACCEPTANCE OF DEFECTIVE WORK

13.01 *Notice of Defects*

A. Prompt notice of all defective Work of which Owner or Engineer has actual knowledge will be given to Contractor. All defective Work may be rejected, corrected, or accepted as provided in this Article 13.

13.02 *Access to Work*

A. Owner, Engineer, their consultants and other representatives and personnel of Owner, independent testing laboratories, and governmental agencies with jurisdictional interests will have access to the Site and the Work at reasonable times for their observation, inspecting, and testing. Contractor shall provide them proper and safe conditions for such access and advise them of Contractor's Site safety procedures and programs so that they may comply therewith as applicable.

EJCDC C-700 Standard General Conditions of the Construction Contract.
Copyright © 2002 National Society of Professional Engineers for EJCDC. All rights reserved.

13.03 *Tests and Inspections*

A. Contractor shall give Engineer timely notice of readiness of the Work for all required inspections, tests, or approvals and shall cooperate with inspection and testing personnel to facilitate required inspections or tests.

B. Owner shall employ and pay for the services of an independent testing laboratory to perform all inspections, tests, or approvals required by the Contract Documents except:

1. for inspections, tests, or approvals covered by Paragraphs 13.03.C and 13.03.D below;

2. that costs incurred in connection with tests or inspections conducted pursuant to Paragraph 13.04.B shall be paid as provided in said Paragraph 13.04.C; and

3. as otherwise specifically provided in the Contract Documents.

C. If Laws or Regulations of any public body having jurisdiction require any Work (or part thereof) specifically to be inspected, tested, or approved by an employee or other representative of such public body, Contractor shall assume full responsibility for arranging and obtaining such inspections, tests, or approvals, pay all costs in connection therewith, and furnish Engineer the required certificates of inspection or approval.

D. Contractor shall be responsible for arranging and obtaining and shall pay all costs in connection with any inspections, tests, or approvals required for Owner's and Engineer's acceptance of materials or equipment to be incorporated in the Work; or acceptance of materials, mix designs, or equipment submitted for approval prior to Contractor's purchase thereof for incorporation in the Work. Such inspections, tests, or approvals shall be performed by organizations acceptable to Owner and Engineer.

E. If any Work (or the work of others) that is to be inspected, tested, or approved is covered by Contractor without written concurrence of Engineer, it must, if requested by Engineer, be uncovered for observation.

F. Uncovering Work as provided in Paragraph 13.03.E shall be at Contractor's expense unless Contractor has given Engineer timely notice of Contractor's intention to cover the same and Engineer has not acted with reasonable promptness in response to such notice.

13.04 *Uncovering Work*

A. If any Work is covered contrary to the written request of Engineer, it must, if requested by Engineer, be uncovered for Engineer's observation and replaced at Contractor's expense.

B. If Engineer considers it necessary or advisable that covered Work be observed by Engineer or inspected or tested by others, Contractor, at Engineer's request, shall uncover, expose, or otherwise make available for observation, inspection, or testing as Engineer may require, that portion of the Work in question, furnishing all necessary labor, material, and equipment.

C. If it is found that the uncovered Work is defective, Contractor shall pay all claims, costs, losses, and damages (including but not limited to all fees and charges of engineers, architects, attorneys, and other professionals and all court or arbitration or other dispute resolution costs) arising out of or relating to such uncovering, exposure, observation, inspection, and testing, and of satisfactory replacement or reconstruction (including but not limited to all costs of repair or replacement of work of others); and Owner shall be entitled to an appropriate decrease in the Contract Price. If the parties are unable to agree as to the amount thereof, Owner may make a Claim therefor as provided in Paragraph 10.05.

D. If, the uncovered Work is not found to be defective, Contractor shall be allowed an increase in the Contract Price or an extension of the Contract Times, or both, directly attributable to such uncovering, exposure, observation, inspection, testing, replacement, and reconstruction. If the parties are unable to agree as to the amount or extent thereof, Contractor may make a Claim therefor as provided in Paragraph 10.05.

13.05 *Owner May Stop the Work*

A. If the Work is defective, or Contractor fails to supply sufficient skilled workers or suitable materials or equipment, or fails to perform the Work in such a way that the completed Work will conform to the Contract Documents, Owner may order Contractor to stop the Work, or any portion thereof, until the cause for such order has been eliminated; however, this right of Owner to stop the Work shall not give rise to any duty on the part of Owner to exercise this right for the benefit of Contractor, any Subcontractor, any Supplier, any other individual or entity, or any surety for, or employee or agent of any of them.

13.06 *Correction or Removal of Defective Work*

EJCDC C-700 Standard General Conditions of the Construction Contract.
Copyright © 2002 National Society of Professional Engineers for EJCDC. All rights reserved.

A. Promptly after receipt of notice, Contractor shall correct all defective Work, whether or not fabricated, installed, or completed, or, if the Work has been rejected by Engineer, remove it from the Project and replace it with Work that is not defective. Contractor shall pay all claims, costs, losses, and damages (including but not limited to all fees and charges of engineers, architects, attorneys, and other professionals and all court or arbitration or other dispute resolution costs) arising out of or relating to such correction or removal (including but not limited to all costs of repair or replacement of work of others).

B. When correcting defective Work under the terms of this Paragraph 13.06 or Paragraph 13.07, Contractor shall take no action that would void or otherwise impair Owner's special warranty and guarantee, if any, on said Work.

13.07 *Correction Period*

A. If within one year after the date of Substantial Completion (or such longer period of time as may be prescribed by the terms of any applicable special guarantee required by the Contract Documents) or by any specific provision of the Contract Documents, any Work is found to be defective, or if the repair of any damages to the land or areas made available for Contractor's use by Owner or permitted by Laws and Regulations as contemplated in Paragraph 6.11.A is found to be defective, Contractor shall promptly, without cost to Owner and in accordance with Owner's written instructions:

1. repair such defective land or areas; or

2. correct such defective Work; or

3. if the defective Work has been rejected by Owner, remove it from the Project and replace it with Work that is not defective, and

4. satisfactorily correct or repair or remove and replace any damage to other Work, to the work of others or other land or areas resulting therefrom.

B. If Contractor does not promptly comply with the terms of Owner's written instructions, or in an emergency where delay would cause serious risk of loss or damage, Owner may have the defective Work corrected or repaired or may have the rejected Work removed and replaced. All claims, costs, losses, and damages (including but not limited to all fees and charges of engineers, architects, attorneys, and other professionals and all court or arbitration or other dispute resolution costs) arising out of or relating to such correction or repair or such removal and replacement (including but not limited to all costs of repair or replacement of work of others) will be paid by Contractor.

C. In special circumstances where a particular item of equipment is placed in continuous service before Substantial Completion of all the Work, the correction period for that item may start to run from an earlier date if so provided in the Specifications .

D. Where defective Work (and damage to other Work resulting therefrom) has been corrected or removed and replaced under this Paragraph 13.07, the correction period hereunder with respect to such Work will be extended for an additional period of one year after such correction or removal and replacement has been satisfactorily completed.

E. Contractor's obligations under this Paragraph 13.07 are in addition to any other obligation or warranty. The provisions of this Paragraph 13.07 shall not be construed as a substitute for or a waiver of the provisions of any applicable statute of limitation or repose.

13.08 *Acceptance of Defective Work*

A. If, instead of requiring correction or removal and replacement of defective Work, Owner (and, prior to Engineer's recommendation of final payment, Engineer) prefers to accept it, Owner may do so. Contractor shall pay all claims, costs, losses, and damages (including but not limited to all fees and charges of engineers, architects, attorneys, and other professionals and all court or arbitration or other dispute resolution costs) attributable to Owner's evaluation of and determination to accept such defective Work (such costs to be approved by Engineer as to reasonableness) and the diminished value of the Work to the extent not otherwise paid by Contractor pursuant to this sentence. If any such acceptance occurs prior to Engineer's recommendation of final payment, a Change Order will be issued incorporating the necessary revisions in the Contract Documents with respect to the Work, and Owner shall be entitled to an appropriate decrease in the Contract Price, reflecting the diminished value of Work so accepted. If the parties are unable to agree as to the amount thereof, Owner may make a Claim therefor as provided in Paragraph 10.05. If the acceptance occurs after such recommendation, an appropriate amount will be paid by Contractor to Owner.

13.09 *Owner May Correct Defective Work*

A. If Contractor fails within a reasonable time after written notice from Engineer to correct defective

EJCDC C-700 Standard General Conditions of the Construction Contract.
Copyright © 2002 National Society of Professional Engineers for EJCDC. All rights reserved.

Work or to remove and replace rejected Work as required by Engineer in accordance with Paragraph 13.06.A, or if Contractor fails to perform the Work in accordance with the Contract Documents, or if Contractor fails to comply with any other provision of the Contract Documents, Owner may, after seven days written notice to Contractor, correct or remedy any such deficiency.

B. In exercising the rights and remedies under this Paragraph 13.09, Owner shall proceed expeditiously. In connection with such corrective or remedial action, Owner may exclude Contractor from all or part of the Site, take possession of all or part of the Work and suspend Contractor's services related thereto, take possession of Contractor's tools, appliances, construction equipment and machinery at the Site, and incorporate in the Work all materials and equipment stored at the Site or for which Owner has paid Contractor but which are stored elsewhere. Contractor shall allow Owner, Owner's representatives, agents and employees, Owner's other contractors, and Engineer and Engineer's consultants access to the Site to enable Owner to exercise the rights and remedies under this Paragraph.

C. All claims, costs, losses, and damages (including but not limited to all fees and charges of engineers, architects, attorneys, and other professionals and all court or arbitration or other dispute resolution costs) incurred or sustained by Owner in exercising the rights and remedies under this Paragraph 13.09 will be charged against Contractor, and a Change Order will be issued incorporating the necessary revisions in the Contract Documents with respect to the Work; and Owner shall be entitled to an appropriate decrease in the Contract Price. If the parties are unable to agree as to the amount of the adjustment, Owner may make a Claim therefor as provided in Paragraph 10.05. Such claims, costs, losses and damages will include but not be limited to all costs of repair, or replacement of work of others destroyed or damaged by correction, removal, or replacement of Contractor's defective Work.

D. Contractor shall not be allowed an extension of the Contract Times because of any delay in the performance of the Work attributable to the exercise by Owner of Owner's rights and remedies under this Paragraph 13.09.

ARTICLE 14 - PAYMENTS TO CONTRACTOR AND COMPLETION

14.01 *Schedule of Values*

A. The Schedule of Values established as provided in Paragraph 2.07.A will serve as the basis for progress payments and will be incorporated into a form of Application for Payment acceptable to Engineer. Progress payments on account of Unit Price Work will be based on the number of units completed.

14.02 *Progress Payments*

A. Applications for Payments

1. At least 20 days before the date established in the Agreement for each progress payment (but not more often than once a month), Contractor shall submit to Engineer for review an Application for Payment filled out and signed by Contractor covering the Work completed as of the date of the Application and accompanied by such supporting documentation as is required by the Contract Documents. If payment is requested on the basis of materials and equipment not incorporated in the Work but delivered and suitably stored at the Site or at another location agreed to in writing, the Application for Payment shall also be accompanied by a bill of sale, invoice, or other documentation warranting that Owner has received the materials and equipment free and clear of all Liens and evidence that the materials and equipment are covered by appropriate property insurance or other arrangements to protect Owner's interest therein, all of which must be satisfactory to Owner.

2. Beginning with the second Application for Payment, each Application shall include an affidavit of Contractor stating that all previous progress payments received on account of the Work have been applied on account to discharge Contractor's legitimate obligations associated with prior Applications for Payment.

3. The amount of retainage with respect to progress payments will be as stipulated in the Agreement.

B. *Review of Applications*

1. Engineer will, within 10 days after receipt of each Application for Payment, either indicate in writing a recommendation of payment and present the Application to Owner or return the Application to Contractor indicating in writing Engineer's reasons for refusing to recommend payment. In the latter case, Contractor may

EJCDC C-700 Standard General Conditions of the Construction Contract.
Copyright © 2002 National Society of Professional Engineers for EJCDC. All rights reserved.

make the necessary corrections and resubmit the Application.

2. Engineer's recommendation of any payment requested in an Application for Payment will constitute a representation by Engineer to Owner, based on Engineer's observations on the Site of the executed Work as an experienced and qualified design professional and on Engineer's review of the Application for Payment and the accompanying data and schedules, that to the best of Engineer's knowledge, information and belief:

a. the Work has progressed to the point indicated;

b. the quality of the Work is generally in accordance with the Contract Documents (subject to an evaluation of the Work as a functioning whole prior to or upon Substantial Completion, to the results of any subsequent tests called for in the Contract Documents, to a final determination of quantities and classifications for Unit Price Work under Paragraph 9.07, and to any other qualifications stated in the recommendation); and

c. the conditions precedent to Contractor's being entitled to such payment appear to have been fulfilled in so far as it is Engineer's responsibility to observe the Work.

3. By recommending any such payment Engineer will not thereby be deemed to have represented that:

a. inspections made to check the quality or the quantity of the Work as it has been performed have been exhaustive, extended to every aspect of the Work in progress, or involved detailed inspections of the Work beyond the responsibilities specifically assigned to Engineer in the Contract Documents; or

b. that there may not be other matters or issues between the parties that might entitle Contractor to be paid additionally by Owner or entitle Owner to withhold payment to Contractor.

4. Neither Engineer's review of Contractor's Work for the purposes of recommending payments nor Engineer's recommendation of any payment, including final payment, will impose responsibility on Engineer:

a. to supervise, direct, or control the Work, or

b. for the means, methods, techniques, sequences, or procedures of construction, or the safety precautions and programs incident thereto, or

c. for Contractor's failure to comply with Laws and Regulations applicable to Contractor's performance of the Work, or

d. to make any examination to ascertain how or for what purposes Contractor has used the moneys paid on account of the Contract Price, or

e. to determine that title to any of the Work, materials, or equipment has passed to Owner free and clear of any Liens.

5. Engineer may refuse to recommend the whole or any part of any payment if, in Engineer's opinion, it would be incorrect to make the representations to Owner stated in Paragraph 14.02.B.2. Engineer may also refuse to recommend any such payment or, because of subsequently discovered evidence or the results of subsequent inspections or tests, revise or revoke any such payment recommendation previously made, to such extent as may be necessary in Engineer's opinion to protect Owner from loss because:

a. the Work is defective, or completed Work has been damaged, requiring correction or replacement;

b. the Contract Price has been reduced by Change Orders;

c. Owner has been required to correct defective Work or complete Work in accordance with Paragraph 13.09; or

d. Engineer has actual knowledge of the occurrence of any of the events enumerated in Paragraph 15.02.A.

C. *Payment Becomes Due*

1. Ten days after presentation of the Application for Payment to Owner with Engineer's recommendation, the amount recommended will (subject to the provisions of Paragraph 14.02.D) become due, and when due will be paid by Owner to Contractor.

D. *Reduction in Payment*

1. Owner may refuse to make payment of the full amount recommended by Engineer because:

EJCDC C-700 Standard General Conditions of the Construction Contract.
Copyright © 2002 National Society of Professional Engineers for EJCDC. All rights reserved.

a. claims have been made against Owner on account of Contractor's performance or furnishing of the Work;

b. Liens have been filed in connection with the Work, except where Contractor has delivered a specific bond satisfactory to Owner to secure the satisfaction and discharge of such Liens;

c. there are other items entitling Owner to a set-off against the amount recommended; or

d. Owner has actual knowledge of the occurrence of any of the events enumerated in Paragraphs 14.02.B.5.a through 14.02.B.5.c or Paragraph 15.02.A.

2. If Owner refuses to make payment of the full amount recommended by Engineer, Owner will give Contractor immediate written notice (with a copy to Engineer) stating the reasons for such action and promptly pay Contractor any amount remaining after deduction of the amount so withheld. Owner shall promptly pay Contractor the amount so withheld, or any adjustment thereto agreed to by Owner and Contractor, when Contractor corrects to Owner's satisfaction the reasons for such action.

3. If it is subsequently determined that Owner's refusal of payment was not justified, the amount wrongfully withheld shall be treated as an amount due as determined by Paragraph 14.02.C.1.

14.03 *Contractor's Warranty of Title*

A. Contractor warrants and guarantees that title to all Work, materials, and equipment covered by any Application for Payment, whether incorporated in the Project or not, will pass to Owner no later than the time of payment free and clear of all Liens.

14.04 *Substantial Completion*

A. When Contractor considers the entire Work ready for its intended use Contractor shall notify Owner and Engineer in writing that the entire Work is substantially complete (except for items specifically listed by Contractor as incomplete) and request that Engineer issue a certificate of Substantial Completion.

B. Promptly after Contractor's notification, , Owner, Contractor, and Engineer shall make an inspection of the Work to determine the status of completion. If Engineer does not consider the Work substantially complete, Engineer will notify Contractor in writing giving the reasons therefor.

C. If Engineer considers the Work substantially complete, Engineer will deliver to Owner a tentative certificate of Substantial Completion which shall fix the date of Substantial Completion. There shall be attached to the certificate a tentative list of items to be completed or corrected before final payment. Owner shall have seven days after receipt of the tentative certificate during which to make written objection to Engineer as to any provisions of the certificate or attached list. If, after considering such objections, Engineer concludes that the Work is not substantially complete, Engineer will within 14 days after submission of the tentative certificate to Owner notify Contractor in writing, stating the reasons therefor. If, after consideration of Owner's objections, Engineer considers the Work substantially complete, Engineer will within said 14 days execute and deliver to Owner and Contractor a definitive certificate of Substantial Completion (with a revised tentative list of items to be completed or corrected) reflecting such changes from the tentative certificate as Engineer believes justified after consideration of any objections from Owner.

D. At the time of delivery of the tentative certificate of Substantial Completion, Engineer will deliver to Owner and Contractor a written recommendation as to division of responsibilities pending final payment between Owner and Contractor with respect to security, operation, safety, and protection of the Work, maintenance, heat, utilities, insurance, and warranties and guarantees. Unless Owner and Contractor agree otherwise in writing and so inform Engineer in writing prior to Engineer's issuing the definitive certificate of Substantial Completion, Engineer's aforesaid recommendation will be binding on Owner and Contractor until final payment.

E. Owner shall have the right to exclude Contractor from the Site after the date of Substantial Completion subject to allowing Contractor reasonable access to complete or correct items on the tentative list.

14.05 *Partial Utilization*

A. Prior to Substantial Completion of all the Work, Owner may use or occupy any substantially completed part of the Work which has specifically been identified in the Contract Documents, or which Owner, Engineer, and Contractor agree constitutes a separately functioning and usable part of the Work that can be used by Owner for its intended purpose without significant interference with Contractor's performance of the remainder of the Work, subject to the following conditions.

EJCDC C-700 Standard General Conditions of the Construction Contract.
Copyright © 2002 National Society of Professional Engineers for EJCDC. All rights reserved.

1. Owner at any time may request Contractor in writing to permit Owner to use or occupy any such part of the Work which Owner believes to be ready for its intended use and substantially complete. If and when Contractor agrees that such part of the Work is substantially complete, Contractor will certify to Owner and Engineer that such part of the Work is substantially complete and request Engineer to issue a certificate of Substantial Completion for that part of the Work.

2. Contractor at any time may notify Owner and Engineer in writing that Contractor considers any such part of the Work ready for its intended use and substantially complete and request Engineer to issue a certificate of Substantial Completion for that part of the Work.

3. Within a reasonable time after either such request, Owner, Contractor, and Engineer shall make an inspection of that part of the Work to determine its status of completion. If Engineer does not consider that part of the Work to be substantially complete, Engineer will notify Owner and Contractor in writing giving the reasons therefor. If Engineer considers that part of the Work to be substantially complete, the provisions of Paragraph 14.04 will apply with respect to certification of Substantial Completion of that part of the Work and the division of responsibility in respect thereof and access thereto.

4. No use or occupancy or separate operation of part of the Work may occur prior to compliance with the requirements of Paragraph 5.10 regarding property insurance.

14.06 *Final Inspection*

A. Upon written notice from Contractor that the entire Work or an agreed portion thereof is complete, Engineer will promptly make a final inspection with Owner and Contractor and will notify Contractor in writing of all particulars in which this inspection reveals that the Work is incomplete or defective. Contractor shall immediately take such measures as are necessary to complete such Work or remedy such deficiencies.

14.07 *Final Payment*

A. Application for Payment

1. After Contractor has, in the opinion of Engineer, satisfactorily completed all corrections identified during the final inspection and has delivered, in accordance with the Contract Documents, all maintenance and operating instructions, schedules, guarantees, bonds, certificates or other evidence of insurance certificates of inspection, marked-up record documents (as provided in Paragraph 6.12), and other documents, Contractor may make application for final payment following the procedure for progress payments.

2. The final Application for Payment shall be accompanied (except as previously delivered) by:

a. all documentation called for in the Contract Documents, including but not limited to the evidence of insurance required by Paragraph 5.04.B.7;

b. consent of the surety, if any, to final payment;

c. a list of all Claims against Owner that Contractor believes are unsettled; and

d. complete and legally effective releases or waivers (satisfactory to Owner) of all Lien rights arising out of or Liens filed in connection with the Work.

3. In lieu of the releases or waivers of Liens specified in Paragraph 14.07.A.2 and as approved by Owner, Contractor may furnish receipts or releases in full and an affidavit of Contractor that: (i) the releases and receipts include all labor, services, material, and equipment for which a Lien could be filed; and (ii) all payrolls, material and equipment bills, and other indebtedness connected with the Work for which Owner or Owner's property might in any way be responsible have been paid or otherwise satisfied. If any Subcontractor or Supplier fails to furnish such a release or receipt in full, Contractor may furnish a bond or other collateral satisfactory to Owner to indemnify Owner against any Lien.

B. *Engineer's Review of Application and Acceptance*

1. If, on the basis of Engineer's observation of the Work during construction and final inspection, and Engineer's review of the final Application for Payment and accompanying documentation as required by the Contract Documents, Engineer is satisfied that the Work has been completed and Contractor's other obligations under the Contract Documents have been fulfilled, Engineer will, within ten days after receipt of the final Application for Payment, indicate in writing Engineer's recommendation of payment and present the Application for Payment to Owner for payment. At the same time Engineer will also give written notice to Owner and Contractor that the Work is acceptable subject to the provisions of Paragraph 14.09. Otherwise, Engineer will

EJCDC C-700 Standard General Conditions of the Construction Contract.
Copyright © 2002 National Society of Professional Engineers for EJCDC. All rights reserved.

return the Application for Payment to Contractor, indicating in writing the reasons for refusing to recommend final payment, in which case Contractor shall make the necessary corrections and resubmit the Application for Payment.

C. Payment Becomes Due

1. Thirty days after the presentation to Owner of the Application for Payment and accompanying documentation, the amount recommended by Engineer, less any sum Owner is entitled to set off against Engineer's recommendation, including but not limited to liquidated damages, will become due and , will be paid by Owner to Contractor.

14.08 *Final Completion Delayed*

A. If, through no fault of Contractor, final completion of the Work is significantly delayed, and if Engineer so confirms, Owner shall, upon receipt of Contractor's final Application for Payment (for Work fully completed and accepted) and recommendation of Engineer, and without terminating the Contract, make payment of the balance due for that portion of the Work fully completed and accepted. If the remaining balance to be held by Owner for Work not fully completed or corrected is less than the retainage stipulated in the Agreement, and if bonds have been furnished as required in Paragraph 5.01, the written consent of the surety to the payment of the balance due for that portion of the Work fully completed and accepted shall be submitted by Contractor to Engineer with the Application for such payment. Such payment shall be made under the terms and conditions governing final payment, except that it shall not constitute a waiver of Claims.

14.09 *Waiver of Claims*

A. The making and acceptance of final payment will constitute:

1. a waiver of all Claims by Owner against Contractor, except Claims arising from unsettled Liens, from defective Work appearing after final inspection pursuant to Paragraph 14.06, from failure to comply with the Contract Documents or the terms of any special guarantees specified therein, or from Contractor's continuing obligations under the Contract Documents; and

2. a waiver of all Claims by Contractor against Owner other than those previously made in accordance with the requirements herein and expressly acknowledged by Owner in writing as still unsettled.

ARTICLE 15 - SUSPENSION OF WORK AND TERMINATION

15.01 *Owner May Suspend Work*

A. At any time and without cause, Owner may suspend the Work or any portion thereof for a period of not more than 90 consecutive days by notice in writing to Contractor and Engineer which will fix the date on which Work will be resumed. Contractor shall resume the Work on the date so fixed. Contractor shall be granted an adjustment in the Contract Price or an extension of the Contract Times, or both, directly attributable to any such suspension if Contractor makes a Claim therefor as provided in Paragraph 10.05.

15.02 *Owner May Terminate for Cause*

A. The occurrence of any one or more of the following events will justify termination for cause:

1. Contractor's persistent failure to perform the Work in accordance with the Contract Documents (including, but not limited to, failure to supply sufficient skilled workers or suitable materials or equipment or failure to adhere to the Progress Schedule established under Paragraph 2.07 as adjusted from time to time pursuant to Paragraph 6.04);

2. Contractor's disregard of Laws or Regulations of any public body having jurisdiction;

3. Contractor's disregard of the authority of Engineer; or

4. Contractor's violation in any substantial way of any provisions of the Contract Documents.

B. If one or more of the events identified in Paragraph 15.02.A occur, Owner may, after giving Contractor (and surety) seven days written notice of its intent to terminate the services of Contractor:

1. exclude Contractor from the Site, and take possession of the Work and of all Contractor's tools, appliances, construction equipment, and machinery at the

EJCDC C-700 Standard General Conditions of the Construction Contract.
Copyright © 2002 National Society of Professional Engineers for EJCDC. All rights reserved.

Site, and use the same to the full extent they could be used by Contractor (without liability to Contractor for trespass or conversion),

2. incorporate in the Work all materials and equipment stored at the Site or for which Owner has paid Contractor but which are stored elsewhere, and

3. complete the Work as Owner may deem expedient.

C. If Owner proceeds as provided in Paragraph 15.02.B, Contractor shall not be entitled to receive any further payment until the Work is completed. If the unpaid balance of the Contract Price exceeds all claims, costs, losses, and damages (including but not limited to all fees and charges of engineers, architects, attorneys, and other professionals and all court or arbitration or other dispute resolution costs) sustained by Owner arising out of or relating to completing the Work, such excess will be paid to Contractor. If such claims, costs, losses, and damages exceed such unpaid balance, Contractor shall pay the difference to Owner. Such claims, costs, losses, and damages incurred by Owner will be reviewed by Engineer as to their reasonableness and, when so approved by Engineer, incorporated in a Change Order. When exercising any rights or remedies under this Paragraph Owner shall not be required to obtain the lowest price for the Work performed.

D. Notwithstanding Paragraphs 15.02.B and 15.02.C, Contractor's services will not be terminated if Contractor begins within seven days of receipt of notice of intent to terminate to correct its failure to perform and proceeds diligently to cure such failure within no more than 30 days of receipt of said notice.

E. Where Contractor's services have been so terminated by Owner, the termination will not affect any rights or remedies of Owner against Contractor then existing or which may thereafter accrue. Any retention or payment of moneys due Contractor by Owner will not release Contractor from liability.

F. If and to the extent that Contractor has provided a performance bond under the provisions of Paragraph 5.01.A, the termination procedures of that bond shall supersede the provisions of Paragraphs 15.02.B, and 15.02.C.

15.03 *Owner May Terminate For Convenience*

A. Upon seven days written notice to Contractor and Engineer, Owner may, without cause and without prejudice to any other right or remedy of Owner, terminate the Contract. In such case, Contractor shall be paid for (without duplication of any items):

1. completed and acceptable Work executed in accordance with the Contract Documents prior to the effective date of termination, including fair and reasonable sums for overhead and profit on such Work;

2. expenses sustained prior to the effective date of termination in performing services and furnishing labor, materials, or equipment as required by the Contract Documents in connection with uncompleted Work, plus fair and reasonable sums for overhead and profit on such expenses;

3. all claims, costs, losses, and damages (including but not limited to all fees and charges of engineers, architects, attorneys, and other professionals and all court or arbitration or other dispute resolution costs) incurred in settlement of terminated contracts with Subcontractors, Suppliers, and others; and

4. reasonable expenses directly attributable to termination.

B. Contractor shall not be paid on account of loss of anticipated profits or revenue or other economic loss arising out of or resulting from such termination.

15.04 *Contractor May Stop Work or Terminate*

A. If, through no act or fault of Contractor, (i) the Work is suspended for more than 90 consecutive days by Owner or under an order of court or other public authority, or (ii) Engineer fails to act on any Application for Payment within 30 days after it is submitted, or (iii) Owner fails for 30 days to pay Contractor any sum finally determined to be due, then Contractor may, upon seven days written notice to Owner and Engineer, and provided Owner or Engineer do not remedy such suspension or failure within that time, terminate the Contract and recover from Owner payment on the same terms as provided in Paragraph 15.03.

B. In lieu of terminating the Contract and without prejudice to any other right or remedy, if Engineer has failed to act on an Application for Payment within 30 days after it is submitted, or Owner has failed for 30 days to pay Contractor any sum finally determined to be due, Contractor may, seven days after written notice to Owner and Engineer, stop the Work until payment is made of all such amounts due Contractor, including interest thereon. The provisions of this Paragraph 15.04 are not intended to preclude Contractor from making a

EJCDC C-700 Standard General Conditions of the Construction Contract.
Copyright © 2002 National Society of Professional Engineers for EJCDC. All rights reserved.

Claim under Paragraph 10.05 for an adjustment in Contract Price or Contract Times or otherwise for expenses or damage directly attributable to Contractor's stopping the Work as permitted by this Paragraph.

ARTICLE 16 - DISPUTE RESOLUTION

16.01 *Methods and Procedures*

A. Either Owner or Contractor may request mediation of any Claim submitted to Engineer for a decision under Paragraph 10.05 before such decision becomes final and binding. The mediation will be governed by the Construction Industry Mediation Rules of the American Arbitration Association in effect as of the Effective Date of the Agreement. The request for mediation shall be submitted in writing to the American Arbitration Association and the other party to the Contract. Timely submission of the request shall stay the effect of Paragraph 10.05.E.

B. Owner and Contractor shall participate in the mediation process in good faith. The process shall be concluded within 60 days of filing of the request. The date of termination of the mediation shall be determined by application of the mediation rules referenced above.

C. If the Claim is not resolved by mediation, Engineer's action under Paragraph 10.05.C or a denial pursuant to Paragraphs 10.05.C.3 or 10.05.D shall become final and binding 30 days after termination of the mediation unless, within that time period, Owner or Contractor:

1. elects in writing to invoke any dispute resolution process provided for in the Supplementary Conditions, or

2. agrees with the other party to submit the Claim to another dispute resolution process, or

3. gives written notice to the other party of their intent to submit the Claim to a court of competent jurisdiction.

ARTICLE 17 - MISCELLANEOUS

17.01 *Giving Notice*

A. Whenever any provision of the Contract Documents requires the giving of written notice, it will be deemed to have been validly given if:

1. delivered in person to the individual or to a member of the firm or to an officer of the corporation for whom it is intended, or

2. delivered at or sent by registered or certified mail, postage prepaid, to the last business address known to the giver of the notice.

17.02 *Computation of Times*

A. When any period of time is referred to in the Contract Documents by days, it will be computed to exclude the first and include the last day of such period. If the last day of any such period falls on a Saturday or Sunday or on a day made a legal holiday by the law of the applicable jurisdiction, such day will be omitted from the computation.

17.03 *Cumulative Remedies*

A. The duties and obligations imposed by these General Conditions and the rights and remedies available hereunder to the parties hereto are in addition to, and are not to be construed in any way as a limitation of, any rights and remedies available to any or all of them which are otherwise imposed or available by Laws or Regulations, by special warranty or guarantee, or by other provisions of the Contract Documents. The provisions of this Paragraph will be as effective as if repeated specifically in the Contract Documents in connection with each particular duty, obligation, right, and remedy to which they apply.

17.04 *Survival of Obligations*

A. All representations, indemnifications, warranties, and guarantees made in, required by, or given in accordance with the Contract Documents, as well as all continuing obligations indicated in the Contract Documents, will survive final payment, completion, and acceptance of the Work or termination or completion of the Contract or termination of the services of Contractor.

EJCDC C-700 Standard General Conditions of the Construction Contract.
Copyright © 2002 National Society of Professional Engineers for EJCDC. All rights reserved.

17.05 *Controlling Law*

A. This Contract is to be governed by the law of the state in which the Project is located.

17.06 *Headings*

A. Article and paragraph headings are inserted for convenience only and do not constitute parts of these General Conditions.

EJCDC C-700 Standard General Conditions of the Construction Contract.
Copyright © 2002 National Society of Professional Engineers for EJCDC. All rights reserved.

1. Delete subparagraph 5.06(A), 5.06(A) Sections 1-7, and subparagraph 5.06(B)

2. Delete sentence in subparagraph 5.07(A) beginning with "All such projects shall contain provisions…."

3. Delete subparagraph 5.07(B), 5.06(B) Sections 1-2, and subparagraph 5.06(C)

4. Delete Paragraph 10.05 (Claims) and replace Paragraph 10.05 (Claims) by reference with the Winchester City Code, Section 21-61 (Contractual Disputes), as amended and where the Winchester City Code does not specify in writing the Virginia Public Procurement Act (VPPA) §2.2-4363 shall apply, as amended. Under Winchester City Code 21-61(C), the Purchasing Agent will render such decision within thirty (30) days.

5. Add subparagraph 12.01(D), as follows:
   "In accordance with Winchester City Code, Section 21-44, Contract Modification: A public contract may include provisions for modification of the contract during performance, but no fixed-price contract may be increased by more than twenty-five percent of the amount of the contract or ten thousand dollars ($10,000), whichever is greater, without the advance written approval of the City Council. In no event may the amount of any contract, without adequate consideration, be increased for any purpose, including, but not limited to, relief of an offeror from the consequences of an error in its bid or offer."

6. Add the following language to 14.02 (A3), as follows: "See Special Conditions, Section 4.02."

7. Delete paragraph 14.09

8. Add subparagraph 17.01 (B), as follows: "This section, or any other General Condition in conflict with Virginia Code §8.01-222 shall not supercede the Commonwealth of Virginia statutory notice provisions. Virginia Code §8.01-222 shall prevail under all circumstances.

ITB# 201910 Construction of Gateway "Welcome to Winchester" Signs

SPECIAL CONDITIONS

1. **SPECIFICATIONS**

Unless otherwise described in the Contract Documents, the following specifications and standards apply to this work:

1. VDOT Road and Bridge Specifications (most current version)
2. City of Winchester – Public Services Standards Manual

2. **INSURANCE REQUIREMENTS – CITY OF WINCHESTER**

2.01 Before any work at the site is started, Contractor shall deliver to Owner, with a Copy to Engineer, an executed Certificate of Insurance. The Certificate shall indicate that the required insurance is in force and state that the policies will not be materially changed or canceled without a thirty (30) day advance notice by registered mail to Owner and Engineer. The representative signing the Certificate shall furnish evidence that he is authorized to so sign as well as his address and the name and address of the agency or agencies through which the insurance was obtained. Contractor shall take out and maintain the following insurance:

2.02 Contractor's Comprehensive General Liability (bodily injury and property damage) shall be provided for the following limits:

A. Combined single limit 1,000,000 dollars each occurrence
B. Combined single limit: 2,000,000 dollars annual aggregate
C. The general liability insurance shall include the following coverage:

1. Comprehensive Form
2. Premises - Operation
3. Explosion and Collapse Hazard
4. Underground Hazards
5. Products/Completed - Operations Hazards
6. Contractual Liability Insurance
7. Broad Form Comprehensive General Liability, Property Damage, including Completed Operations
8. Independent Contractors (Contractor's Protective Liability)
9. Personal Injury (all insuring agreements), Deleting the Employee Exclusion
10. If protection is under an umbrella policy, it shall not exclude any of the above items under the basic policy.

D. City of Winchester shall be named by endorsement as Additional Insured.

2.03 Contractor's Automobile Liability (bodily injury and property damage) shall be provided for the following limits:

A. Combined single limit: 1,000,000 dollars each occurrence

B. The Automobile Liability Insurance shall include the following coverage:

1. Comprehensive Form
2. Owned
3. Hired
4. Non-Owner

2.04 Contractor's Workers Compensation Insurance as required by Federal, State, and Municipal Laws for the protection of all Contractor's employees working on or in connection with the Project, including broad form, all state and voluntary compensation coverage, and employer's liability coverage with the following limits:

A. Bodily injury by accident 1,000,000 Dollars each accident

B. Bodily injury by disease 1,000,000 Dollars policy limit

C. Bodily injury by disease 1,000,000 Dollars for each employee

2.05 All insurers shall be licensed to conduct business in the Commonwealth of Virginia and all insurance companies are required to have an A.M. Best Company financial rating of A- or better.

2.06 Contractor shall require his insurance agent to certify on the insurance certificate that the insurance coverage specified by these specifications is fully in effect, both in scope and amount. If insurance coverage is effected with more than one company, the individual certificates shall identify the items of insurance which the individual companies cover. The insurance certificates shall contain a provision that the coverage afforded under the policies will not be canceled or materially changed unless at least a thirty (30) days prior written notice has been given to the Owner.

2.07 Left Intentionally Blank

2.08 Notification and Handling of an Insurance Claim:

The general contractor on any City construction project shall be responsible for ensuring that all matters concerning the completion of an assigned project, including but not limited to handling of insurance claims by third parties arising as a result of the acts and omissions of the general contractor or his subcontractors, are handled in a professional manner. To this end, the City expects the general contractor to act responsibly with regard to prompt payment of valid insurance claims and upon notice of a claim, the general contractor shall immediately notify the Owner’s project manager, investigate and document the claim, and make a liability determination within ten (10) business days. Pending subrogation between the general contractor and/or sub-contractor and/or any insurance carrier will not be a cause for delay in payment of a valid claim. Default of this provision may result in retainage

payments being withheld and jeopardize the general contractor's future bid opportunities with the City of Winchester.

3. **WORKING HOURS - HOLIDAYS**

Work under the Contract shall not be prosecuted on Saturdays, Sundays, or on legal holidays. Work hours (Monday – Friday) shall be from 7:00 a.m. until 6:00 p.m. If the Contractor wishes to prosecute any portion of the Work outside of the established work hours or on Saturdays, Sundays or legal holidays, he shall first obtain written permission from the Engineer. Such requests shall be submitted at least 48 hours in advance of the period proposed for such overtime work. For the purpose of this Contract, the legal holidays are identified as:

- Independence Day
- Labor Day
- Veteran's Day
- Thanksgiving Day
- Day after Thanksgiving
- Christmas Eve observed
- Christmas Day
- New Year's Day
- Martin Luther King Day
- Memorial Day
- Independence Day

4. **PROGRESS PAYMENTS**

4.01 The basis for payments shall be the actual quantity of work completed, as determined in field by the Engineer.

4.02 An amount equal to five percent (5%) of each progress payment shall be held from each payment as retainage.

5. **MISCELLANEOUS OTHER CONDITIONS**

5.01 It shall be the responsibility of the Contractor to locate utilities in the field. Contractor shall give all utility companies that may have subsurface or surface utilities in the area adequate notice at least 48 hours in advance that the Contractor is to perform work in this area.

5.02 The attention of the Contractor is drawn to the fact that the possibility exists of the Contractor encountering various water, chemical, electrical, or other lines. Contractor shall exercise extreme care before and during construction to locate and flag these items so as to avoid damage to existing lines. Should damage occur to an existing line, the Contractor shall repair the line at no cost to the Owner. Temporary support, adequate protection and maintenance of all underground and surface utility installations and structures, drains, and other obstructions encountered in the progress of the work shall be provided by the

Contractor at his own expense.

5.03 Contractor shall be responsible for the temporary removal and re-installation of structures including, but not limited, to piping, conduits, drains, that may interfere with the work. The cost of such work shall be included in the Bid for the project and shall not result in any additional cost to the Owner. It shall be the Contractor's responsibility to contact and obtain permission from various authorities having jurisdiction over such structures, prior to start of the work.

5.04 Local drainage is not to be blocked. Shoulders, ditches, and drainage facilities shall be kept clear at all times and in condition satisfactory to the Engineer.

5.05 Adequate barricades, construction signs, or other traffic control devices as required shall be placed and maintained during the course of the work, and until it is safe for the pedestrian and vehicular traffic to use the area. The rules and regulations of the Local and State and Federal authorities respecting safety provisions shall be observed.

5.06 All acceptance and payment of work is subject to inspection by the City of Winchester.

5.07 The Contractor shall be responsible to establish and maintain communications with the residents and business owners of the area affected by the construction. The purpose of this communication is to notify the residents and business owners of construction activities which affect them, and to coordinate accommodations for them during construction. The Contractor shall also be required to assist businesses and residents as necessary with access into or out of their property during the construction.

5.08 Contractor and all sub-contractors shall obtain a City of Winchester Business License before beginning work.

5.09 Contractor is responsible for correcting any damages caused to private property as a result of construction, at their own expense. Contractor shall be responsible for completing a video recording (DVD) of the entire project area within the City's right-of-way before construction begins and providing a copy of the DVD to the City. This recording will be the basis for help in determining any damages to private property that may occur during construction that the contractor may be responsible for.

5.10 The Contractor shall be solely responsible for adhering to all OSHA requirements at all times during the construction of the project.

5.11 The Contractor shall be responsible to construct the new facilities and/or modify existing facilities to ensure positive drainage at all locations.

*****END SPECIAL CONDITIONS*****

I. Description.

This specification summarizes the scope of work for this project.

II. Scope of Work

In general, the project consists of the construction of three (3) "Welcome to Winchester" gateway signs. These signs will be located at:

1. Berryville Avenue
2. Amherst Street
3. Valley Avenue

Schematics showing the location of each sign are provided at the end of this section.

The contractor shall be responsible for constructing the signs as shown on the drawings and restoring the area to its existing condition. The contractor **shall not** be responsible for installing the light or electrical work.

III. Sequence of Construction

The Contractor shall determine the sequence of construction for the project.

IV. Measurement and Payment.

There is no separate payment for this section.

New Sign On
Berryville Avenue
BERRYVILLE AVE
BERRYVILLE AVE
INTERSTATE 81 RAMP

CAMPUS BLVD
AMHERST ST
AMHERST ST
New Sign On
Amherst Street
WESTSIDE STATION DR

VALLEY AVE
New Sign On
Valley Avenue
SHAWNEE DR

CITY OF WINCHESTER
SPECIAL PROVISION
TRAFFIC CONTROL

January 30, 2019

I. Description.

This work shall consist of maintaining and protecting traffic (vehicular and pedestrian) through areas of construction, maintaining public and private entrances, constructing and obliterating detours, and protecting the traveling public (both vehicles and pedestrians) within the limits of the project and over detours.

II. Procedures

Traffic shall be maintained and protected in accordance with the requirements of Section 105.14 of the VDOT Specifications. Work shall be scheduled and performed so as to provide minimum interference with and maximum protection for traffic. The Contractor's personnel, equipment, machinery, tools, and supplies shall be kept outside the clear zone and clear of active traffic lanes except as necessary for prosecuting active work. Stabilized construction entrances shall be used in construction areas where there is a potential for construction vehicles to track material from the construction site onto a paved surface. Material that is spilled or tracked onto the traveled pavement during prosecution of the work shall be promptly removed.

The Contractor shall maintain the traffic control devices, which shall include, but not be limited to, repositioning of displaced devices including traffic barrier service, replacement due to inadequate structural integrity including traffic barrier service, replacement due to loss of reflectivity, repair of defaced sheeting and legend, replacement of broken supports, repositioning of leaning signs so they are plumb and the sign face is perpendicular to the pavement edge, cleaning of dirty devices, and replacement of stolen or vandalized devices. Barricades, barriers, and other safety devices shall be inspected at least daily, and deficiencies shall be immediately corrected. Safety and protective devices furnished by the Contractor will remain the property of the Contractor and shall be removed from the project site upon completion of the work or as directed by the City.

The procedures and devices for the maintenance of traffic shall be the same as in Section 512 of the VDOT Specifications.

The following are specific requirements for this project:

A. **All work is outside of the roadway and traffic shall generally not be impacted during the construction of the project.**
B. **If material deliveries are necessary that would temporarily close a maximum of one travel lane, the contractor shall be responsible for installing all temporary signage or flagging traffic. The contractor shall notify the City at least 24 hours in advance before any lane closures occur.**

The Contractor shall submit a traffic control plan that shall be reviewed and approved by the City before construction commences. **The Contractor shall make immediate changes to the traffic control devices as directed by the City to maintain safety.**

III. Measurement and Payment.

There is no separate payment for this work and the cost of traffic control should be included in the lump sum price for each sign.

CITY OF WINCHESTER
TECHNICAL
SPECIFICATION
WELCOME TO
WINCHESTER
GATEWAY SIGN

January 30, 2019

I. Description.

This work shall consist of furnishing and installing new "Welcome to Winchester" gateway monument signs at the locations and as detailed in the Contract Documents and as directed by the Engineer.

II. Materials

All materials shall be identical to (or an approved equal to) the existing sign recently installed at east end of Crossover Boulevard (close to Interstate-81).

a) Brick – Pine Hall "Winchester Handcraft" M/S
b) Mortar – Brick-Lok Type N
c) Sand – Yellow Washed
d) Precast Stone
    a. Cement – Federal White Type 1
    b. Course Aggregate – Lafarge Texas #7
    c. Fine Aggregate – Lafarge Texas C33
    d. Admixtures
        i. ADVA Cast 575 type F
        ii. MB AE 90 air-entraining agent
e) Sign Panel – ALPOLIC architectural solid color aluminum composite material and Acrylite FF

III. Procedures

Contractor shall install all materials in accordance with the contract drawings and the manufacturer's specifications.

IV. Measurement and Payment.

"Sign" will be measured and paid for at the contract lump sum price. This price shall include all equipment, labor and materials necessary to complete the work.

Payment will be made under:

Pay Item	**Pay Unit**
Sign (location)	Lump Sum

ALPOLIC®
MATERIALS
MITSUBISHI PLASTICS COMPOSITES AMERICA, INC.

architectural – solid

ALPOLIC® architectural Solid color aluminum composite materials are manufactured with a polyethylene core and a 2-coat fluoropolymer paint finish. Distinctive classics of the industry, they are stocked for immediate shipment.

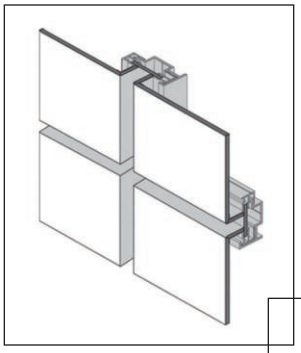

CONSTRUCTION INFORMATION

PROJECT: Ashland Community College

LOCATION: Grayson, KY

ARCHITECT: Clotfelter-Samokar

PRODUCT: ALPOLIC® Mist White & KDX

GENERAL INFORMATION

Picture your next project in attractive, clean colors and designs that only our lightweight aluminum composite material (ACM) panels can achieve. They are stocked in two widths – 50 and 62 inches; and two lengths – 146 and 196 inches. These 4mm-thick panels are manufactured to architectural standards with a traditional polyethylene core.

BONE WHITE	MIST WHITE	OYSTER	ALUMINUM GREY	TOB BLACK
4-4BNT-G30	4-4MST-G30	4-4CRT-G30	4-4AGT-G30	4-4TOB-G15

ALPOLIC® solid

INTERIOR AND EXTERIOR SURFACING
INTERIOR AND EXTERIOR SIGNAGE

SURFACE TREATMENT

ALPOLIC® architectural Solid color panels are stocked with a FEVE LUMIFLON™ or a PVDF Kynar finish, both are fluoroploymer paint systems that feature excellent durability and weathering for architectural needs. Available stock architectural Solid colors include Bone White, Mist White, Oyster, Aluminum Grey, BGY Grey, and TOB Black.

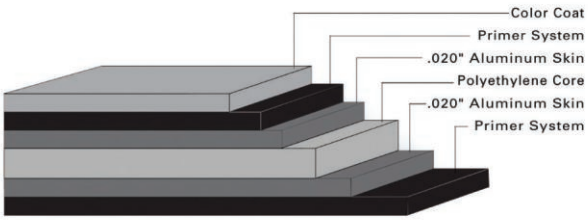

STANDARD PANEL SIZE

Standard widths are 50" (1270mm) and 62" (1575mm) and lengths of 146" (3708mm) and 196" (4978mm). Panels are stocked in 4mm thickness. Standard crate is 50 pieces. Custom lengths and thickness available. Please contact ALPOLIC® Customer Service for current available stock and additional information.

FINISH TOLERANCE

Color:	DE 1.0 max from standard
Gloss:	Nominal +/- 10 units

PRODUCT TOLERANCE

Width:	± 0.08" (2mm)
Length:	± 0.16" (4mm)
Thickness:	4mm ± 0.008" (0.2mm)
	6mm ± 0.012" (0.3mm)
Bow:	maximum 0.5% of length and/or width
Squareness:	maximum 0.2" (5mm)
Peel Strength:	>22 in lb/in (ASTM D1781)

ALPOLIC® material is trimmed and squared with cut edges to offer the best panel edge conditions in the industry.

FIRE PERFORMANCE

Standard ALPOLIC® architectural Solid finish panels with a polyethylene core have been tested by independent testing laboratories using nationally recognized tests.

This material meets all requirements of the International Building Code for combustible construction:

IBC Listed
UL Listed

Please visit www.alpolic-northamerica.com or call technical support for complete report listings and additional information.

WARRANTY

Standard panel warranty:	10 Year
Finish warranty:	30 Year*

Call ALPOLIC® Customer Service for exclusions and warranty details. *30 year warranty only applies to standard architectural colors.

PRODUCT NOTES

- Panels should be stored flat in a dry, indoor environment.
- Fabricate panels at temperatures above 55°F.
- Protective film should be removed from panels soon after installation.
- Please refer to ALPOLIC® Painted ACM Fabrication Manual for routing and fabrication recommendations.
- Crating fees apply to orders for less than standard piece crate.

FOR TECHNICAL INFORMATION, PLEASE CALL 1.800.422.7270

U.S. HEADQUARTERS
MITSUBISHI PLASTICS COMPOSITES AMERICA, INC.
401 Volvo Parkway, Chesapeake, VA 23320
Telephone: 800-422-7270, Facsimile: 757-436-1896
www.alpolic-northamerica.com e-mail: info@alpolic.com

Close X

Loading Image...

NORVA PLASTICS logo

Ph: (757) 622-9281 Toll Free: 1(800) 826-0758

Acrylite FF®

ACRYLITE® FF is a continuously manufactured acrylic sheet. It is produced by an innovative process, resulting in a sheet offering the easy handling and processing of extruded sheet, along with the high optical characteristics and low stress levels expected of cast products.

The clarity and light stability of acrylic resin make it possible to manufacture crystal clear ACRYLITE FF sheet.

Characteristics
ACRYLITE FF acrylic sheet is a lightweight, rigid and weather-resistant thermoplastic. ACRYLITE FF sheets are dimensionally stable and resistant to breakage. They can be easily sawed, machined, heat-formed and cemented.

Because of its virtually distortion-free clarity, it is well suited for use in a variety of applications.

• Skylights • Recreational Vehicles • Boat, Motorcycle, and Snowmobile Farings	• Signs • Displays • Boutique Items

Availability
ACRYLITE FF acrylic sheet is available in thicknesses from 0.080" to .236", and actual sheet sizes from 48" x 72" to 72" x 96". All sheets are protected with polyethylene film or paper masking.

Safety
ACRYLITE FF sheet is safer than glass because of its greater breakage resistance. If subjected to impact beyond the limit of its resistance, it does not shatter into small slivers, but breaks into comparatively large pieces. ACRYLITE FF sheet complies with American National Standard Z97.1-1975, Safety Glazing for Buildings.

Weather Resistance
ACRYLITE FF will withstand exposure to blazing sun, extreme cold, sudden temperature changes, salt water spray, etc. It will not deteriorate after many years of service because of the inherent stability of acrylic resins. ACRYLITE FF has been widely accepted for use in school buildings, industrial plants, aircraft glazing and outdoor signs.

Dimensional Stability
Although ACRYLITE FF will expand and contract due to changes in temperature or humidity, it will not shrink with age. Some shrinkage occurs when ACRYLITE FF is heated to forming temperature, but post-forming stability is excellent.

Light Weight
ACRYLITE FF sheet is only half the weight of glass, and 43% the weight of aluminum.

Rigidity
ACRYLITE FF sheet is not as rigid as glass or metals. However, it is more rigid than many other plastics such as acetates or vinyls. Under wind load a sheet will bow and foreshorten as a result of deflection.

For glazing installations the maximum wind load and the size of the window must be considered when the thickness of a panel is to be

determined.

If ACRYLITE FF is formed into ribbed or domed shapes, rigidity will be increased and deflection minimized. **- top**

Cold Flow
Large, flat, ACRYLITE FF sheets, if insufficiently supported, may deform permanently due to continuous loads such as snow, or even due to their own weight. Increased rigidity obtained by forming will minimize cold flow.

Strength and Stresses
Although the tensile strength of ACRYLITE FF acrylic sheet is 10,000 psi at room temperature (ASTM 0638), stress-crazing can be caused by continuous loads below this value. For glazing applications continuously imposed design loads should not exceed 1 ,500 psi. For applications subject to continuous loading, design loads should not exceed 750 psi
at 23°C (73°F).

Localized, concentrated stresses must be avoided. For this reason, and because of thermal expansion and contraction, **large sheets should never be fastened with bolts, but should always be installed in frames**.

All thermoplastic materials-including ACRYLITE FF sheet--will gradually lose tensile strength as the ambient temperature approaches the maximum recommended for continuous service-160°F. **- top**

Expansion and Contraction
Like most other plastics, ACRYLITE FF sheet will expand and contract I from 3 to 8 times as much as glass or metals. The designer should be aware of the problems that could be caused by this rather large coefficient of expansion. A 48" panel will expand and contract approximately .002" for each degree F. change in temperature. In outdoor use, where summer and winter temperatures differ as much as 100°F., **a 48" sheet will expand and contract approximately ¼". Sash rabbets must be of sufficient depth to allow for expansion as well as for contraction.**

ACRYLITE FF sheet also absorbs water when exposed to high relative humidities resulting in an expansion of the sheet. At relative humidities of 100%, 80% and 60%, the dimensional changes are 0.3%, 0.2% and 0.1 % respectively. **- top**

Heat Resistance
ACRYLITE FF sheets can be used at temperatures from -30°F. up to + 190°F., depending on the application. **It Is recommended that temperatures not exceed 160°F. for continuous service, or 190°F. for short intermittent use.** Components made of ACRYLITE FF should not be exposed to high heat sources, such as high wattage incandescent lamps, unless the finished product is ventilated to permit the dissipation of heat.

Light Transmission
Clear, colorless ACRYLITE FF acrylic sheet has a light transmittance of 92%. It is clearer than glass and will not turn yellow.

Solar Energy Control
Transparent colored ACRYLITE FF sheet can be used to reduce glare and solar energy transmittance. **Transparent colored sheets are available in a range of color densities.**

This wide range of transmittance values enables the architect to select a density which will provide adequate daylight and at the same time will control glare and solar heat build-up.

Chemical Resistance
ACRYLITE FF sheet has excellent resistance to many chemicals including:

• solutions of in organic alkalies such as ammonia
• dilute acids such as sulfuric acid
• aliphatic hydrocarbons such as hexane and VM&P naphtha.

ACRYLITE FF is not attacked by most foods, and foods are not affected by it. It is attacked, in varying degrees, by:

• aromatic solvents such as benzene and toluene
• chlorinated hydrocarbons such as methylene chloride and carbon tetrachloride
• ethyl and methyl alcohols.
• some organic acids such as acetic acid
• lacquer thinners, esters, ketones and ethers

For a listing of the resistance of ACRYLITE FF sheet to more than 60 chemicals refer to Table at bottom of page.

Formability **- top**
ACRYLITE FF sheet will soften as the temperature is increased above 170°F. As the temperature is increased the sheet passes through the thermo elastic state to the thermo plastic state. The change is gradual rather than sharply defined. The forming temperature range is between 290°F. and 320°F. Because the sheet gradually becomes thermo plastic certain

procedures should be considered during thermoforming: if the sheet is to be hung in an oven it will be necessary to use a continuous clamp rather than several individual clamps to prevent the sheet from permanently deforming between clamps; if the sheet is to be heated by infra red heaters while clamped in a horizontal frame it may be necessary to block out the heaters above the center of the sheet to prevent the center from becoming too hot and permanently sagging and deforming under its own weight.

The sheet will exhibit very little "memory" after forming and probably will not return to its original flat condition if reheated.

ACRYLITE FF will shrink in the machine direction when heated without a frame. Sheets up to 3mm thick will shrink a maximum of 6%. Sheets thicker than 3mm will shrink a maximum of 3%.

Some expansion may occur in the transverse machine direction. This will be limited to less than 2% in all cases.

Cutting and Machining
ACRYLITE FF sheet can be sawed on circular saws or band saws. It can be drilled, routed, filed and machined much like hardwood or brass. Because the new sheet softens quickly, it is necessary to keep the cutting tool and machined edge of the sheet as cool as possible. Cooling of the cutting tool is recommended. Tool sharpness and "trueness" are essential to prevent gumming, heat buildup and stresses in the part. Heat buildup at the machined edge could lead to subsequent stress crazing and therefore must be avoided.

Laser Cutting
Laser technology is being rapidly accepted by industry for quickly and accurately cutting, welding, drilling, scribing, and engraving plastics.

CO2 lasers focus a large amount of light energy on a very small area which is extremely effective for cutting complex shapes in acrylic sheet. The laser beam produces a narrow kerf in the plastic allowing for close nesting of parts and minimal waste. CO2 lasers vaporize the acrylic as they advance resulting in a clean polished edge but with high stress levels; annealing acrylic sheet after laser cutting is recommended to minimize the chance of crazing during the service life of the part.

Cementing
ACRYLITE FF acrylic sheet can be cemented using common solvent cements or polymerizable cements. The most critcial factor is the edge of the part to be cemented. The edge must have been properly machined so as to have no stresses in the edge. Annealing of the part prior to cementing is recommended. Cement and cement fumes should not contact formed or polished surfaces.

Flammability
ACRYLITE FF acrylic sheet is a combustible thermoplastic. Precaution should be used to protect material from flames and high heat sources. Access panels may be required for evacuation and venting of rooms glazed with ACRYLITE FF acrylic sheet.

It has a burning rate of 1.0 inches per minute (for 1/8 inch thickness) according to ASTM 0-635.

Other properties related to flammability:
Flame spread is 175 according to ASTM E-84 or 100-145 according to ULC-S102.2.

The self-ignition temperature is 830°F. , when measured in accordance with ASTM 0-1929. Smoke density measured by ASTM 0-2843 is 5%-10%.

While these test data are based on small scale laboratory tests, frequently referenced in various Building Codes, these tests do not duplicate actual fire conditions.

The products of combustion, if sufficient air is present, are carbon dioxide and water. However, in many fires sufficient air will not be available and toxic carbon monoxide will be formed as it will from other common combustible materials.

Consult your Building Code for approved uses for ACRYLITE FF acrylic sheet

Thermal Conductivity **- top**
The thermal conductivity of a material-its ability to conduct heat-is called k-Factor. The k-Factor is an inherent property of the material, and is independent of its thickness and of the surroundings to which it is exposed.

The k-Factor of ACRYLITE FF sheet is:

$$\frac{1.3 \text{ B.T.U.}}{\text{(hour) (sq. ft.) (OF./inch)}}$$

Whereas the k-Factor is a physical property of the material, the U-Factor -or overall coefficient of heat transmission-is the value used to calculate the total heat loss or gain through a window.

The U-Factor is the amount of heat, expressed in BTU's, which will pass through one square foot of a material of a specific thickness, per

hour, for each degree F. difference between inside and outside air temperatures.

This value takes into account the thickness of the sheet, whether the sheet IS in a horizontal or vertical position, as well as the wind velocity.

U-Factors are based on specific conditions (e.g., single-glazed or double-glazed installations) and are different for summer and winter.

Listed below are U-Factors for several thicknesses of ACRYLITE FF sheet for single-glazed, vertical installations, based on the standard ASHRAE* summer and winter design conditions.

U-Factors--BTU/hour sq. ft. Fº .		
ACRYLITE FF Sheet Thickness	**Summer Conditions**	**Winter Conditions**
1/8"	0.98	1.06
3/16	0.94	1.02
1/4	0.90	0.97
5/16	0.87	0.93
3/8	0.83	0.89

* American Society of Heating, Refrigerating and Air-Conditioning Engineers

The total heat loss or gain through a window (due to temperature difference only) can be calculated by multiplying the area of the window in square feet, times the difference between indoor and outdoor temperatures in degrees Fahrenheit, times the appropriate U-Factor (from Table above). The answer will be expressed in BTU's per hour. Heat intake through solar radiation must be added to arrive at the total heat gain.

ACRYLITE FF sheet is a better insulator than glass. Its U-Factor or overall coefficient of heat transfer is approximately 10% lower than that of glass of the same thickness.

Thermal Shock and Stresses
ACRYLITE FF sheet is more resistant than glass to thermal shock and to stresses caused by substantial temperature differences between a sunlit and a shaded area of a window or between opposite surfaces of a window.

Surface Hardness
The surface of plastics is not as hard as that of glass. Therefore, reasonable care should be exercised in handling and cleaning ACRYLITE FF sheet.

Electrical Properties
ACRYLITE FF has many desirable electrical properties. It is a good insulator. Its surface resistivity is higher than those of rpost plastics. Continuous outdoor exposure has little effect on its electrical properties..

Physical Properties of ACRYLITE FF **- top**

Property[a]		**ASTM Method**	**Typical Value (.236" Thickness)**[b]
Mechanical	Specific Gravity	D 792	1.19
	Tensile Strength Elongation, Rupture Modulus of Elasticity	D 638	10,000 psi (69 M Pa) 4.5% 400,000 psi (2800 M Pa)
	Flexural Strength (Rupture) Modulus of Elasticity	D 790	17,500 psi (117 M Pa) 480,000 psi (3300 M Pa)
	Compressive Strength (Yield)	D 695	17,000 psi (117 M Pa)
	Impact Strength Izod Milled Notch	D 256	0.4 ft. lbs/in. of notch (21.6 J/m of notch)
	Rockwell Hardness	D 5	M-93
	Barcol Hardness	D 2583	48
Optical (Clear Material)	Refractive Index	D 542	1.49
	Light Transmission, Total	D 1003	92%
Thermal	Forming Temperature	--	300ºF (149ºC)
	Deflection Temperature under load, 264 psi	D 648	195ºF (91ºC)
	Vicat Softening Point	D 1525	230ºF (110ºC)
	Maximum Recommended Continuous Service Temperature	--	160ºF[d] (71ºC)
	Coefficient of Linear Thermal Expansion	D 696	.00004 in/in-ºF (.000064 in/in-ºC)
	Coefficient of		1.3 BTU/(Hr)(Sq. Ft.)(ºF/in.)

	Thermal Conductivity (k-Factor)	Cenco-Fitch	(0.19 w/m*K)
	Flammability (Burning Rate 3mm thickness)	D 635	1.0 in/min. (25 mm/min.)
	Self-Ignition Temperature	D 1929	830ºF (443ºC)
	Specific Heat @ 77ºF.	--	0.35 BTU/(lb.)(ºF) (1470J/Kg*k)
	Smoke Density Rating	D 2843	5-10%
Electrical	Dielectric Strength Short Time (0.125"-thickness)	D 149	430 volts/mil (17 KV/mm)
	Dielectric Constant 60 Hertz 1,000 Hertz 1,000,000 Hertz	D 150	3.6 3.3 2.8
	Dissipation Factor 60 Hertz 1,000 Hertz 1,000,000 Hertz	D 150	0.06 0.04 0.02
	Volume Resistivity	D 2	10^{16}ohm-cm
	Surface Resistivity	D 2	10^{15}ohms
Water Absorption	24 hrs @ 73ºF	D 0	0.2%
Odor		--	None
Taste		--	None

Chemical Resistance of Acrylite FF

The table below gives an indication of the chemical resistance of ACRYLITE FF. The code used to describe chemical resistance is as follows--

R=Resistant
ACRYLITE FF withstands this substance for long periods and at temperatures up to 120°F(49°C).

LR=Limited Resistance
ACRYLITE FF only resists the action of this substance for short periods at room temperatures. The resistance for a particular application must be determined.

N=Not Resistant
ACRYLITE FF is not resistant to this substance. It is either swelled, attacked, dissolved or damaged in some manner.

Plastic materials can be attacked by chemicals in severval ways. The methods of fabrication and/or conditions of exposure of ACRYLITE FF sheet, as well as the manner in which the chemicals are applied, can influence the final results even for "R" coded chemicals. Some of these factors are listed below:

Fabrication--Stress generated while sawing, sanding, machining, drilling, and /or forming.

Exposure--Length of exposure, stresses induced during the life of the product due to various loads, changes in temperatures, etc.

Application of Chemicals--by contact, rubbing, wiping, spraying, etc.

The table should therefore be used as only a general guide and, in case of doubt, it should be supplemented by tests made under actual working conditions.

Chemical	Code	Chemical	Code
Acetic Acid(5%)	LR	Hydrogen Peroxide (3%)	R
Acetic Acid(Glacial)	N	Hydrogen Peroxide (28%)	LR
Acetone	N	Isopropyl Alcohol	LR
Ammonium Chloride	R	Kerosene	R
Ammonium Hydroxide(10%)	R	Lacquer Thinner	N
Ammonium Hydroxide(Conc.)	R	Methyl Alcohol(30%)	LR
Aniline	N	Methyl Alcohol(100%)	N
Battery Acid	R	Methyl Ethyl Ketone (MEK)	N
Benzene	N	Methylene Chloride	N
Butyl Acetate	N	Mineral Oil	R

Calcium Chloride (Sat.)	R	Nitric Acid(10%)	R
Calcium Hypochlorite	R	Nitric Acid(40%)	LR
Carbon Tetrachloride	LR	Nitric Acid(Conc.)	N
Chloroform	N	Oleic Acid	R
Chromic Acid	LR	Olive Oil	R
Citric Acid(10%)	R	Phenol Solution(5%)	N
Cottonseed Oil(Edible)	R	Soap Solution(Ivory)	R
Detergent Solution (Heavy Duty)	R	Sodium Carbonate(2%)	R
Diesel Oil	R	Sodium Carbonate(20%)	R
Diethyl Ether	N	Sodium Chloride(10%)	R
Dimethyl Formamide	N	Sodium Hydroxide(1%)	R
Dioctyl Phthalate	N	Sodium Hydroxide(10%)	R
Ethyl Actate	N	Sodium Hydroxide(60%)	R
Ethyl Alcohol(30%)	LR	Sodium Hypochlorite(5%)	R
Ethyl Alcohol(95%)	N	Sulfuric Acid(3%)	R
Ethylene Dichloride	N	Sulfuric Acid(30%)	R
Ethylene Glycol	R	Sulfuric Acid(Conc.)	N
Gasoline	LR	Toluene	N
Glycerine	R	Transformer Oil	R
Heptane	R	Trichloroethylene	N
Hexane	R	Turpentine	R
Hydrochloric Acid	R	Water (Distilled)	R
Hydrofluoric Acid (25%)	N	Xylene	N

Suicide Prevention Door
Developed for Patient Human Rights surveyors to provide additional privacy.

Suicide Prevention Sink Faucet
Self-closing, push-button, metered faucets water, and money.

Suicide Prevention Shower Control Handles
Control knob is recessed, no hanging points.

Suicide Prevention Soap Dispenser
Secured to the wall is virtually indestructible – Safe for the Patients

Sentinel Event Reduction Door
the first recognized and patented door designed with safety features to prevent inpatient suicides.

Suicide Resistant Toilet Paper Dispenser
One piece- impact resistant Solid Surface Material.

Life Safety Lexan Covers High-impact polycarbonate Withstand major abuse (field tested for over 7 years)

Impact Resistant Polycarbonate Light Lenses and Mirrors
We can fabricate any size.

Hospital Pharmacy Drug Return Drop Box
Made of Polycarbonate - unbreakable.

Suicide Prevention Door Handles, Patient Doors
Suicide Resistant, no hanging points.

ABS High-Impact Plumbing Covers
Toilet and underneath sink plumbing covers.

Suicide Resistant Sink/ Vanity Combo Unit
LEED product, meets Federal standards.

ADA Compliant Grab Bars
For Healthcare and Correctional Facilities or Retrofit Applications

Polycarbonate Two-way MRI Warning Doors
Doors move both directions for easy movement of patients

Precision Board - High Density Urethane
Sizes: ½", ¾", 1", 1.5", 2", 3" - Densities: 15, 18 & 30 lbs

Acrylics
Acrylics
Krinkglas, Acrylite FF
Acrylite GP,
Acrylite Plus
Acrylite AR
Acrylite Rod
Acrylite Sheet
Acrylite Tubing

Marine and Signage
Polycarve,
Woodgrain Panel
Burl Plastic Panel
Stone and Marble
Hi-Tech
Color Cores

PVC
PVC
Type 1
CPVC Vintec
Celtec
Komacel
Celtec Expanded
Celtec 700

Nylon
Nylon
Nylon,
Cast Nylon

Polyethylene
Low Density,
High Density,
Cutting Board,

Kydex
General Info,
Available Grades

PVC Vinyl Strip

Adhesives

Polyethylene

Kydex

Adhesives

Seaboard

Phenolic

Fabrication Info, Phenolic Selection Chart, Canvas C-CE, G10-FR4, G11-FR5, GPO-1, GPO-3, Paper X-XX-XXX, Linen L-LE, G5-G9, G7, Counter plate Laminate, Static Dissipate Laminate, Ballistic-Resistant Laminate

Phenolic

Additional Products

Corian, Delrin, Polypropylene, Teflon, UHMW, Hydlar, ABS, Starboard, Flexible Tubing, Coraplast, Kytec, LUMAsite, Machinable Boards, Lexan Life Safety Products, Sentinel Event Reduction Doors

Norva Plastics, Inc. • 3911 Killam Ave., Norfolk, Virginia 23508
Toll Free: 1(800) 826-0758 • Ph: (757) 622-9281 • Fax: (757) 623-2859 • Email: info@norvaplastics.com

Warranty

Superior Durability & UV Protection

Primer / Topcoat System Warranty	North America Canada (excludes Gulf Coast & Florida)	U.S. Gulf Coast & Florida	U.S. Desert South West, Mexico & Central America
Grip-Gard ® Plus or Grip Gard BC System with high gloss clear-coat.	10 years	7 years	7 years

Durability and UV Protection

Durability has many beneficial aspects. Having a tough outer coat protects the surface for a variety of manufactured sign substrates, allow the finished sign product to maintain its color… longer. AkzoNobel achieves this by providing clear coats and pigmented products which con UV properties that enhance product durability. In turn, film integrity and exibility are maintained for an extended time due to a slower breakdo of the technology that holds the paint film together. This means that come rain or shine your exterior surfaces that demand flexibility will be to adapt; giving fewer cracks, and less flaking and chalking.

Gloss Levels

Gloss levels range from ultra-high gloss to matted finishes for both interior and exterior sign products. The level of gloss which is speci ed determines the length of your warranty. Please reference chart below.

MSDS Test Data

Grip-Gard finishes have been tested for chemical resistance using ASTM test methods. Test results against a variety of substrates can be on our website. ASTM test methods are widely used by the US Military, US Post Office, TSA and the US Federal government, as well as S and local governments this data is required.

ASTM Standards for Grip-Gard Plus click here (/signfinishes/en-us/Architects/Documents/ASTM_Grip-Gard%20Plus%20Physical%20Properties.pdf).