COPYRIGHT: AUG. 26, 2016

GENERAL PROJECT REQUIREMENTS

A. CODE COMPLIANCE:

1. THE CONTRACTOR SHALL COMPLY WITH THE LAWS, ORDINANCES, RULES, AND REGULATIONS OF ALL GOVERNMENTAL AUTHORITIES HAVING JURISDICTION, THE NATIONAL FIRE PROTECTION ASSOCIATION, THE NATIONAL ELECTRICAL CODE, AND THE PUBLIC UTILITIES HAVING JURISDICTION OVER ANY OF THE SYSTEMS HEREIN SPECIFIED.

B. PERMIT FEES:

1. THE CONTRACTOR SHALL OBTAIN AND PAY FOR ALL NECESSARY PERMITS, INSPECTIONS, AND APPROVALS TO COMPLETE THE PROJECT WORK. ALL CERTIFICATES SHALL BE IN DUPLICATE AND BE DELIVERED TO THE OWNER'S REPRESENTATIVE.

C. DEFINITIONS:

1. "PROVIDE" UNDER THIS CONTRACT IS DEFINED AS FURNISH AND INSTALL.
2. "CONCEALED" UNDER THIS CONTRACT IS DEFINED AS HIDDEN BY ARCHITECTURAL WALLS AND CEILINGS.
3. "EXPOSED" UNDER THIS CONTRACT IS DEFINED AS VISIBLE TO VIEW.
4. "INDICATED" UNDER THIS CONTRACT IS DEFINED AS SHOWN IN THE CONTRACTED DOCUMENTS.

D. SCOPE OF WORK:

1. PROVIDE ALL WORK INDICATED IN THE CONTRACT DOCUMENTS.

E. EXISTING CONDITIONS:

1. THE SITE, LOCATION AND ROUTING OF SYSTEMS INDICATED TO HAVE NEW CONNECTIONS MADE TO THEM ARE SHOWN AS ACCURATELY AS FIELD CONDITIONS WOULD PERMIT. BIDDING CONTRACTORS SHALL VISIT THE SITE AND THOROUGHLY EXAMINE THE CONTRACT DRAWINGS. CONTRACTORS WHO DO NOT VISIT THE SITE MAY BE UNILATERALLY NOT PERMITTED TO SUBMIT A BID IF THE OWNER SO DECIDES. ALL EXISTING CONDITIONS SHALL BE EXAMINED AND THEIR EXACT LOCATIONS VERIFIED.
2. THE CONTRACTORS SHALL REPORT TO THE OWNER, BEFORE SUBMITTING A BID, ANY CONDITIONS WHICH MIGHT MAKE THE INSTALLATION OF THE REQUIRED EQUIPMENT A PROBLEM. NO CONSIDERATION OR ALLOWANCE WILL BE GRANTED FOR FAILURE TO INVESTIGATE EXISTING CONDITIONS OR MISUNDERSTANDINGS OF THE CONTRACT DOCUMENTS.

F. DEMOLITION:

1. ALL RECYCLABLE MATERIALS AS DIRECTED IN THE SCOPE OF WORK, SHALL BE TURNED OVER TO THE OWNERS OR ITS REPRESENTATIVES. THE CONTRACTOR IS REQUIRED TO RECEIVE A WRITTEN WAIVER FROM THE OWNER BEFORE TAKING POSSESSION OR REMOVING ANY RECYCLABLE MATERIAL.
2. THE CONTRACTOR SHALL REMOVE ALL EQUIPMENT NOT INDICATED TO BE REUSED TO A DESIGNATED LOCATION AT THE PROJECT SITE. AFTER THE EQUIPMENT HAS BEEN ASSEMBLED FOR INSPECTION BY THE OWNER AND POSSIBLE RETENTION, ALL EQUIPMENT NOT TO BE RETAINED BY THE OWNER SHALL BE REMOVED FROM THE SITE BY THE CONTRACTOR.

G. CONTRACT DOCUMENTS:

1. THE CONTRACT DOCUMENTS SHALL BE CONSIDERED AS DIAGRAMMATIC PURPOSES ONLY. ATTENTION IS CALLED TO THE FACT THAT WHILE THE DOCUMENTS ARE GENERALLY TO SCALE AND ARE AS ACCURATE AS THE SCALE WILL PERMIT, ALL IMPORTANT DIMENSIONS SHALL BE DETERMINED IN THE FIELD.
2. THE DRAWINGS ARE NOT TO BE CONSIDERED AS CONSTRUCTION SHOP DRAWINGS. THE DRAWINGS DO NOT INDICATE EVERY FITTING, ELBOW, OFFSET, VALVE, PULL BOX OR SIMILAR COMPONENTS WHICH ARE REQUIRED TO COMPLETE THE PROJECT WORK. PREPARE FIELD COORDINATION DRAWINGS TO ENSURE PROPER INSTALLATION. PROVIDE ALL NECESSARY OFFSETS AND FITTINGS TO INSTALL THE SYSTEMS AS DIAGRAMMED AT NO ADDITIONAL COST.

H. EQUIPMENT AND MATERIALS:

1. ALL EQUIPMENT AND MATERIALS SHALL BE NEW, UNLESS INDICATED OTHERWISE, AND THE CURRENT MODEL FOR WHICH REPLACEMENT PARTS ARE AVAILABLE. SUBSTITUTIONS SHALL ONLY BE ACCEPTED AT THE DISCRETION OF THE OWNER'S REPRESENTATIVE OR THE ENGINEER.
2. THE CONTRACTOR SHALL INSTALL AND CONNECT ALL EQUIPMENT AND MATERIALS IN ACCORDANCE WITH THE BEST ENGINEERING PRACTICE AND UNLESS OTHERWISE INDICATED SHALL FOLLOW THE MANUFACTURER'S PUBLISHED INSTRUCTIONS AND RECOMMENDATIONS. FURNISH AND INSTALL ALL REQUIRED AUXILIARY ITEMS TO PROVIDE A COMPLETE & OPERABLE SYSTEM.
3. THE CONTRACTOR SHALL FURNISH AND INSTALL ALL REQUIRED AUXILIARY ITEMS FOR A COMPLETE. SYSTEM.
4. ALL EQUIPMENT SHALL BE MOUNTED VIBRATION FREE.

I. COORDINATION:

1. THE CONTRACTOR SHALL INSTALL ALL DUCTWORK, PIPING, RACEWAYS, CIRCUITRY, CONDUIT, ETC., AS HIGH AS POSSIBLE TO MAXIMIZE HEADROOM. RUN PARALLEL OR PERPENDICULAR TO THE BUILDING WALLS IN A NEAT WORKMANLIKE MANNER. AVOID CONFLICT WITH NEW EQUIPMENT, LIGHTS, CABLE TRAYS, ETC. IF CONFLICT WITH DOES OCCUR, THE CONTRACTOR SHALL REROUTE CONFLICTING PROJECT WORK AS DIRECTED BY THE OWNER'S REPRESENTATIVE AT NO ADDITIONAL COST.
2. THE CONTRACTOR SHALL PROVIDE COMPLETE COORDINATION DRAWINGS FOR EACH LEVEL. SHOW ALL RELEVANT TRADES AND AVAILABLE CEILING PLENUM HEIGHT.
3. THE CONTRACTOR SHALL TAKE ALL FIELD MEASUREMENTS NECESSARY FOR THIS WORK AND ASSURE RESPONSIBILITY FOR THEIR ACCURACY. THE DRAWINGS AS SHOWN ARE DIAGRAMMATIC AND SHALL NOT BE SCALED. REFER TO MANUFACTURER'S STANDARD ROUGH-IN DRAWINGS FOR PLUMBING FIXTURES, AND TO ARCHITECTURAL DRAWINGS FOR EXACT LOCATIONS. REPORT ANY CONFLICTS OR DISCREPANCIES TO THE ARCHITECT/ENGINEER.
4. SHOULD ANY STRUCTURAL IMPEDIMENTS (I.E. BEAMS, SLAB FOLDS, POST-TENSIONED SLABS, COLUMNS, SHEAR WALLS, ETC.) PREVENT THE SETTING OF CABINETS, PANELBOARDS, EQUIPMENT, FEEDER CONDUITS, ETC. AT THE LOCATION INDICATED ON THE PLANS, THE CONTRACTOR SHALL MAKE ANY NECESSARY DEVIATIONS, AS COORDINATED WITH THE ARCHITECT/ENGINEER AND IMPLEMENTED AT NO ADDITIONAL COST.
5. COORDINATE WITH ALL TRADES TO AVOID INTERFERENCE AMONG MECHANICAL, ELECTRICAL, ARCHITECTURAL, AND STRUCTURAL ITEMS. PROVIDE ALL NECESSARY OFFSETS AND FITTINGS IN CIRCUITRY AND OTHER ITEMS REQUIRED TO INSTALL THE WORK WITHOUT INTERFERENCES.
6. COORDINATE WITH THE WORK OF OTHER SECTIONS AND TRADES, WITH EQUIPMENT FURNISHED BY OTHERS, AND WITH THE CONSTRAINTS OF THE EXISTING CONDITIONS OF THE PROJECT SITE.

J. PARTITIONS AND DUCTWORK:

1. THE CONTRACTOR SHALL REPAIR ALL OPENINGS IN WALLS, CEILINGS, FLOORS, ROOF, ETC., WHICH ARE CREATED BY DEMOLITION AND/OR NEW PROJECT WORK. THE REPAIRS SHALL BE WITH MATERIALS AND FINISH TO MATCH EXISTING. OPENINGS AND PENETRATIONS IN FIRE RATED PARTITIONS OR DUCTWORK SHALL BE SEALED PER U.L. APPROVED FIRE ASSEMBLY TO MAINTAIN FIRE RESISTANT INTEGRITY. DUCTWORK AND PIPING SHALL BE CAPPED, SEALED AIR AND WATERTIGHT, AND INSULATED TO MATCH EXISTING.
2. WHERE IT IS NECESSARY TO CUT WALLS, FLOORS OR CEILINGS FOR THE INSTALLATION OF ANY ELECTRICAL WORK, SUCH CUTTING SHALL BE THE RESPONSIBILITY OF THIS CONTRACTOR. ALL AFFECTED AREAS SHALL BE PATCHED BY THE CONTRACTOR TO MATCH THE ORIGINAL CONDITION, RATING AND APPEARANCE. BEFORE CUTTING TAKES PLACE, THE CONTRACTOR SHALL OBTAIN APPROVAL FROM THE ARCHITECT AND/OR BUILDING MANAGEMENT.
3. WHERE IT IS NECESSARY TO CORE DRILL THE FLOORS FOR INSTALLATION OF SPECIFIED WORK, THE CONTRACTOR SHALL HAVE THE AREA TO BE CORE DRILLED X-RAYED TO ENSURE THE STRUCTURAL SYSTEM WILL NOT BE COMPROMISED. DO NOT CORE DRILL, PENETRATE OR CUT EXISTING CONCRETE FLOOR SLABS WITHOUT CONSULTING WITH THE BASE BUILDINGS STRUCTURAL ENGINEER OF RECORD, AND/OR A REGISTERED PROFESSIONAL STRUCTURAL ENGINEER. DO NOT PROCEED WITH WORK WITHOUT WRITTEN PERMISSION FROM THE ABOVE PROFESSIONALS. ARRANGE MOBILIZATION AND PAYMENT FOR X-RAY EQUIPMENT, IF NECESSARY, TO INVESTIGATE ALL POTENTIAL STRUCTURAL IMPEDIMENTS.
4. ALL NEW FLOOR OPENINGS, AND OPENINGS IN SLAB-TO-SLAB WALLS SHALL BE PATCHED BY THE CONTRACTOR OR TRADE WHOSE WORK REQUIRES PATCHING TO MATCH ORIGINAL CONDITION, APPEARANCE AND FIRE RATING.
5. PROTECT ADJACENT MATERIALS INDICATED TO REMAIN. INSTALL AND MAINTAIN DUST AND NOISE BARRIERS TO KEEP DIRT, DUST, AND NOISE FROM BEING TRANSMITTED TO ADJACENT AREAS. REMOVE PROTECTION AND BARRIERS AFTER DEMOLITION OPERATIONS ARE COMPLETE
6. FIRE STOPPING SHALL BE UL APPROVED AND COMPLIANT WITH ALL LOCAL AND FEDERAL CODES AND REGULATIONS. CONTRACTOR SHALL ENGAGE THE SERVICES OF TECHNICIAN'S TRAINED AND CERTIFIED IN THE APPLICATION OF FIRE STOP MATERIALS. WHERE REQUIRED BY LOCAL CODES, THE TECHNICIAN SHALL BE LICENSED.

K. SITE CLEANUP:

1. THE CONTRACTOR SHALL CLEAN UP THE JOBSITE DAILY. THE CONTRACT AREA AND ALL OTHER AREAS USED FOR STORAGE, STAGING, ETC. SHALL BE BROOM CLEANED AND MATERIALS, TOOLS, ETC. SHALL BE LEFT IN AN ORDERLY MANNER.
2. UPON COMPLETION OF THE WORK, THE CONTRACTOR SHALL THOROUGHLY CLEAN THE CONTRACT AREA AND ALL OTHER AREAS USED FOR STORAGE, STAGING, ETC. THIS SHALL INCLUDE, BUT NOT BE LIMITED TO WASHING AND/OR REPAIRING GLASS, REMOVING SPOTS AND STAINS, CLEANING ALL FIXTURES AND WASHING ALL FLOORS, WALLS AND CEILINGS IF APPROPRIATE.

L. GUARANTEES:

1. THE CONTRACTOR SHALL TEST ALL EQUIPMENT INSTALLED UNDER THIS CONTRACT AND DEMONSTRATE TO THE OWNER'S REPRESENTATIVE ITS PROPER OPERATION(S). ALL NEW EQUIPMENT SHALL BE MOUNTED VIBRATION FREE. THE CONTRACTOR SHALL PROVIDE ALL LABOR AS REQUIRED DURING COMMISSIONING AND INSTRUCTION OF OWNERS PERSONNEL PROCESSES.
2. THE CONTRACTOR SHALL REPAIR OR REPLACE ANY DEFECTIVE OR INOPERATIVE EQUIPMENT AND COMPONENTS FURNISHED BY THE CLIENT AT NO COST TO THE CLIENT.
3. THE CONTRACTOR'S GUARANTEE SHALL INCLUDE ALL EQUIPMENT SUPPLIED BY THE CONTRACTOR OR CLIENT.

M. RECORD DRAWINGS:

1. THE CONTRACTOR SHALL MAINTAIN THREE (3) SETS OF ALL RECORD DOCUMENTS, FOR DISTRIBUTION TO THE CLIENT. THESE DOCUMENTS SHALL INCLUDE; CONTRACT DRAWINGS AND SPECIFICATIONS, APPROVED SIGNED-OFF PERMIT DRAWINGS AND BUILDING PERMITS, ADDENDA(S), AND APPROVED SHOP DRAWINGS. THESE DOCUMENTS SHALL BE MARKED AS REQUIRED TO RECORD ALL CHANGES DURING CONSTRUCTION. THESE DRAWINGS SHALL BE DELIVERED TO THE OWNER, IN GOOD CONDITION AND ORDER TO THE FOLLOWING PARTIES: THE ORIGINAL DOCUMENTS TO THE TENANT, ONE (1) COPY TO THE BUILDING MANAGEMENT AND ONE COPY TO THE ARCHITECT.

N. BUILDING SMOKE/FIRE ALARM SYSTEM:

1. PROTECT THE BUILDING SMOKE/FIRE ALARM DETECTION SYSTEM AS REQUIRED TO PREVENT FALSE ALARMS WITHIN THE PROJECT CONSTRUCTION AREA.

O. EQUIPMENT SERVICE ACCESS:

1. PROVIDE ACCESS DOORS IN DRYWALL CEILINGS AND PARTITIONS TO SERVICE EQUIPMENT, BALANCE DIFFUSERS, AND EXPOSE JUNCTION BOXES. COORDINATE THE EXACT LOCATIONS AND STYLE OF FLANGELESS ACCESS DOORS WITH THE ENGINEER.

P. PROJECT COMPLETION (IF APPLICABLE):

1. THE CONTRACTOR SHALL NOTIFY THE ENGINEER WHEN THE PROJECT IS APPROXIMATELY 75% COMPLETE IN ORDER TO SCHEDULE A PRE-FINAL REVIEW OF CONSTRUCTION. NO WORK SHALL BE CONCEALED BY CEILINGS, WALLS, ETC. FINAL REVIEW SHALL BE SCHEDULED AT 100% COMPLETION OF CONSTRUCTION. ALL PUNCH LIST ITEMS MUST BE ACCOMPLISHED PRIOR TO FINAL ACCEPTANCE.

Q. JOB RESPONSIBILITY:

1. PROVIDE ADEQUATE STORAGE FACILITIES FOR MATERIALS AND EQUIPMENT DURING THE PROGRESS OF THE WORK.
2. BE RESPONSIBLE FOR THE CONDITION OF ALL MATERIAL AND EQUIPMENT EMPLOYED IN THE INSTALLATION UNTIL FINAL ACCEPTANCE BY THE OWNER. PROTECT SAME FROM ANY CAUSE WHATSOEVER.
3. BE RESPONSIBLE FOR THE REPLACEMENT OF ALL DAMAGED OR DEFECTIVE WORK, MATERIALS EQUIPMENT. DO NOT INSTALL SENSITIVE OR DELICATE EQUIPMENT UNTIL MAJOR CONSTRUCTION WORK IS COMPLETED.
4. OBSERVE AND CONFORM TO APPLICABLE SAFETY REGULATIONS, INCLUDING THOSE REQUIRED BY THE OWNER'S REPRESENTATIVE.
5. ERECT AND MAINTAIN SUITABLE BARRIERS, PROTECTIVE DEVICES, LIGHTS AND WARNING SIGNS FOR THE PROTECTION OF OCCUPANTS, TRANSIENTS AND WORKMEN FROM DANGER DUE TO WORK PERFORMED BY THE CONTRACTOR.
6. MAKE GOOD ANY DAMAGE TO THE WORK CAUSED BY FLOODS, STORMS, ACCIDENTS, ACTS OF NEGLIGENCE, STRIKES, VIOLENCE OR THEFT UP TO THE TIME OF FINAL ACCEPTANCE BY THE OWNER.
7. BE RESPONSIBLE FOR ANY LOSS OR INJURY TO PERSONS OR PROPERTY RESULTING FROM NEGLECT OR ANY OTHER CAUSES ON THE PART OF THE EMPLOYEES.
8. DO NOT LEAVE ANY WORK IN A HAZARDOUS CONDITION, EVEN TEMPORARILY.
9. ERECT, MAINTAIN AND FINALLY REMOVE ALL SCAFFOLDING, STAGING, FORMS, PLATFORMS AND LADDERS REQUIRED FOR THE INSTALLATION.
10. DO NOT INSTALL WORK FOR WHICH AN EXTRA CHARGE IS TO BE MADE WITHOUT WRITTEN APPROVAL FROM THE OWNER'S REPRESENTATIVE AND THE OWNER. A WRITTEN REQUEST FOR EXTRA WORK SHALL STATE THE NATURE OF THE WORK, BY WHOM REQUESTED, AND THE PRICE TO BE CHARGED.
11. CONTRACTOR SHALL SUBMIT A COPY OF THEIR SAFETY TRAINING PROGRAM AND QUALITY CONTROL PROGRAM FOR REVIEW AND ACCEPTANCE.
12. CONTRACTOR SHALL ACCEPT ALL OWNER SUPPLIED EQUIPMENT AND PROVIDE ON OR OFF SITE STORAGE, RIGGING, AND HANDLING AS NEEDED.

MECHANICAL SPECIFICATIONS:

A. GENERAL

1. THE DRAWINGS PREPARED FOR THIS PROJECT ARE AN OUTLINE TO SHOW WHERE PIPES, DUCTS AND APPARATUSES MUST GO IN ORDER TO HARMONIZE WITH THE BUILDING AND INSTALLATION OF THE VARIOUS TRADES. WORK MUST BE INSTALLED IN ACCORDANCE WITH THE DRAWINGS AS MUCH AS POSSIBLE. DRAWINGS SHALL BE CAREFULLY CHECKED DURING THE COURSE OF CONSTRUCTION. IF DISCREPANCIES, ERRORS OR OMISSIONS ARE DISCOVERED PRIOR TO OR DURING CONSTRUCTION PHASE, NOTIFY THE ENGINEER IMMEDIATELY FOR INTERPRETATION OR CORRECTION. TAKE NECESSARY MEASUREMENTS INCLUDING CLEARANCES FOR EQUIPMENT THAT ARE TO BE FURNISHED. THE ARCHITECT /ENGINEER RESERVE THE RIGHT TO MAKE MINOR LOCATION CHANGES OF PIPING AND EQUIPMENT WHERE SUCH ADJUSTMENTS ARE DEEMED DESIRABLE FROM AN APPEARANCE OR OPERATIONAL STANDPOINT. SUCH CHANGES WILL BE ANTICIPATED SUFFICIENTLY IN ADVANCE TO AVOID EXTRA WORK OR DELAY THE PROGRESS OF THE PROJECT.
2. CONTRACTOR SHALL BE RESPONSIBLE FOR VISITING THE SITE AND VERIFYING EXISTING FIELD CONDITIONS PRIOR TO INSTALLATION. THE CONTRACT DOCUMENTS INDICATE APPROXIMATE LOCATIONS OF DUCTWORK AND PIPING AND ARE DIAGRAMMATIC IN NATURE. THE CONTRACTOR SHALL BE RESPONSIBLE FOR DETERMINING THE ACTUAL LOCATION AND ROUTING OF THE EXISTING PIPING AND NEW DUCTWORK.
3. CONTRACTOR IS RESPONSIBLE FOR COORDINATING HIS WORK WITH THE WORK OF ALL TRADES AND MAKING ANY NECESSARY MODIFICATIONS TO HIS WORK, INCLUDING OFFSETS, AT NO ADDITIONAL COST TO THE OWNER.
4. ALL WORK SHALL BE DONE IN ACCORDANCE WITH LOCAL CODES. THESE CODES SHALL BE FOLLOWED AS MINIMUM PROVIDING HIGHER GRADES OF MATERIAL AND WORKMANSHIP. WHERE REQUIRED BY THESE DOCUMENTS, PROVIDE ALL TESTS REQUIRED BY LOCAL CODES.
5. ALL PERMITS, FEES, LICENSES, APPROVALS, AND OTHER ARRANGEMENTS FOR THE WORK SHALL BE OBTAINED BY THE CONTRACTOR AT HIS OWN EXPENSE.
6. CONTRACTOR SHALL GUARANTEE ALL WORK AND MATERIAL FOR ONE YEAR AFTER FINAL ACCEPTANCE AGAINST ALL DEFECTS OF MATERIAL, EQUIPMENT AND WORKMANSHIP. PROVIDE AN ADDITIONAL FOUR (4) YEAR WARRANTY (TOTAL OF 5 YEARS) ON ALL REFRIGERATION COMPRESSORS. DELIVER ALL WARRANTY CERTIFICATES TO THE OWNER PRIOR TO FINAL ACCEPTANCE AND BUILDING TURNOVER.
7. PROVIDE A SET OF ASSEMBLED PRINTED INSTRUCTIONS FOR THE OPERATION AND MAINTENANCE OF EACH ITEM INSTALLED ALONG WITH THE EQUIPMENT CUTS AND CONTROL WIRING DIAGRAMS.
8. THE MECHANICAL DRAWINGS INDICATE THE GENERAL ROUTING AND LOCATION OF DUCTWORK, PIPING, EQUIPMENT, FIXTURES, TERMINAL DEVICES, ETC. CONTRACTOR SHALL DETERMINE THE EXACT LOCATION FROM ACTUAL FIELD MEASUREMENTS AT THE JOB SITE. ALL DUCTWORK AND PIPING SHALL BE COORDINATED WITH LIGHT FIXTURES, PLUMBING, STRUCTURAL SYSTEM, CEILING GRID, SUPPORTS, SPRINKLER PIPING AND ARCHITECTURAL FEATURES OF THE BUILDING PRIOR TO FABRICATION OR INSTALLATION. NO EXTRAS WILL BE ALLOWED FOR DUCTWORK OR PIPING WHICH IS FABRICATED AND THEN FOUND UNABLE TO FIT IN THE INTENDED SPACE. ALL EQUIPMENT SHALL BE LOCATED TO ALLOW FOR CLEANING, INSPECTION AND SERVICE.
9. CONTRACTOR SHALL BE RESPONSIBLE FOR COORDINATING CEILING TYPE AND DIFFUSER & GRILLE LOCATIONS WITH ARCHITECT'S REFLECTED CEILING PLANS. DIFFUSER AND GRILLE LOCATION ON SHOP DRAWINGS ARE SUBJECT TO APPROVAL BY ARCHITECT.
10. PROVIDE ACCESS PANELS FOR ANY PIECE OF EQUIPMENT LOCATED ABOVE NON-ACCESSIBLE CEILINGS. NO EQUIPMENT SHALL BE LOCATED ABOVE WALLS.
11. WHEREVER DUCTWORK OR OTHER ITEMS PASS THROUGH FIRE-RATED WALLS AND FLOORS, THE CONTRACTOR SHALL ADEQUATELY FIRE STOP THE SPACE BETWEEN ITEMS AND THE MASONRY OR THE SPACE BETWEEN THE ITEM AND THE SLEEVE. FIRE STOP SHALL BE NON-COMBUSTIBLE, NON-MELTING, APPROVED MATERIAL.
12. THE DRAWINGS INDICATE GENERAL CHARACTER AND LOCATION OF WORK INCLUDED, BUT MAY HAVE MINOR SPECIALTIES OMITTED THAT SHALL BE PROVIDED WITHOUT EXTRA COST.
13. CONTRACTOR SHALL PROVIDE ALL OPENINGS REQUIRED TO INSTALL IN THE NEW SYSTEMS AND EQUIPMENT. PROVIDE CUTTING AND PATCHING OF WALLS, PARTITIONS, CEILINGS AND FLOORS, AS REQUIRED. PATCH TO MATCH ADJACENT SURFACES UNLESS OTHERWISE NOTED. REFER TO ARCHITECTURAL PLANS FOR FINISHES. SLEEVE ALL PIPE PENETRATIONS AND SEAL ALL OPENINGS. REFER TO ARCHITECTURAL PLANS FOR ADDITIONAL REQUIREMENTS.
14. CONTRACTOR IS RESPONSIBLE FOR SEALING ALL PENETRATIONS TO THE INTERIOR OR EXTERIOR OF THE BUILDING AS A RESULT OF HIS WORK, IN SUCH A MANNER THAT THE DESIGN FIRE RATING IS MAINTAINED. CONTRACTOR SHALL COORDINATE WITH ALL OTHER TRADES AS REQUIRED FOR NECESSARY PENETRATIONS. IN THE ABSENCE OF ARCHITECTURAL SPECIFICATIONS, USE TWO (2) HOUR FIRE RATING.
15. CONTRACTOR SHALL FURNISH ALL PIPING, VALVES AND FITTINGS AT A PRESSURE RATING OF NO LESS THAN 125 PSI, OR AS REQUIRED BY LOCAL CODES AND REGULATIONS. WHERE LOCAL JURISDICTIONS ALLOW FOR A LOWER PRESSURE RATING THAN THAT SPECIFIED ABOVE, THE ABOVE SPECIFIED PRESSURE RATING SHALL DICTATE.
16. IN CASES WHERE MANUFACTURER PROVIDES INTERNAL MAXIMUM OVERCURRENT PROTECTION (MOCP) DEVICES INTERNALLY TO THE EQUIPMENT, THE MANUFACTURER SHALL SUPPLY LABELING STATING SUCH ON THE EQUIPMENT SERVED. OTHERWISE CONTRACTOR TO SUPPLY EXTERNAL FUSED DISCONNECT SIZED TO PROVIDE MOCP.
17. CONDENSATE PIPING SHALL BE TYPE "L" COPPER OR SCHEDULE 40 PVC. CONDENSATE PUMP WITH FLEX TUBING TO EXTERIOR ACCEPTABLE – AS REQUIRED BY SITE CONDITIONS.

B. INSULATION

1. DUCTWORK
   a. SIZES INDICATED ARE FREE INSIDE AREA, I.E. SIZES DO NOT INCLUDE INSULATION OR LINING THICKNESS.
   b. INSULATION SHALL BE WRAPPED ON DUCTS WITH 1/2" OUTWARD CLINCHING STAPLES ON 4" CENTERS. STAPLES AND SEAMS SHALL BE SEALED WITH A BRUSH COAT OF VAPOR BARRIER MASTIC.
   c. INSULATION SHALL BE FACED WITH FIRE RESISTANT VAPOR BARRIER JACKET WITH A 2" TAB ON ONE EDGE.
   d. SUPPLY, RETURN, AND EXHAUST DUCTWORK INSULATION SHALL BE A 2" THICK 1.0 LB. DENSITY FLEXIBLE FIBERGLASS BLANKET.
   e. OUTDOOR AIR, SUPPLY, RETURN, AND PLENUM INSULATION SHALL BE A 1-1/2" THICK 2 LB. DENSITY RIGID FIBERGLASS BOARD.
   f. EXHAUST AND RELIEF DUCTWORK SHALL BE INSULATED FROM POINT OF EXHAUST FROM THE BUILDING TO THE BACKDRAFT DAMPER OR SHUT-OFF DAMPER CLOSEST TO THE EXIT FROM THE BUILDING.
   g. EXPOSED DUCTWORK SHALL BE EITHER INTERNALLY LINED OR COVERED W/ RIGID FIBERGLASS INSULATION OF SIMILAR THICKNESS AND PERFORMANCE.
   h. INTERNAL LINING OF SIMILAR THICKNESS AND PERFORMANCE MAY BE USED IN LIEU OF WRAPPING THE DUCTWORK WITH INSULATION.
   i. ALL DUCTWORK LOCATED IN UNCONDITIONED SPACES SHALL BE INSULATED WITH A MINIMUM OF R-6 INSULATION. ALL DUCTWORK LOCATED OUTSIDE OF THE BUILDING ENVELOPE SHALL HAVE A MINIMUM OF R-8 INSULATION.
2. INSULATION OF DUCTWORK AND PIPE PASSING THROUGH NON-RATED WALLS SHALL BE CONTINUOUS THROUGH THE WALL PENETRATION.
3. INSULATION OF CONDENSATE PIPING SHALL BE 1" THICK FIBERGLASS INSULATION WITH VAPOR BARRIER.
4. PROVIDE 1" THICK 3/4 LB. DENSITY ACOUSTICAL INTERIOR LINER WHERE INDICATED. ADJUST SHEET METAL SIZE AS REQUIRED TO PROVIDE CLEAR INSIDE DIMENSION INDICATED.

C. DUCTWORK

1. ALL NEW DUCT TURNS, ELBOWS, ETC. SHALL BE INSTALLED WITH TURNING VANES OR MINIMUM 1-1/2 RADIUS ELBOWS.
2. PROVIDE LOCKING VOLUME DAMPERS AT ALL BRANCH TAKE-OFFS.
3. CONSTRUCT ALL HIGH PRESSURE VAV DUCTWORK AND ACCESSORIES IN ACCORDANCE WITH THE LATEST EDITION OF SMACNA STANDARDS FOR 2" PRESSURE CLASS AND SEAL CLASS A.
4. CONSTRUCT ALL LOW PRESSURE DUCTWORK AND ACCESSORIES IN ACCORDANCE WITH THE LATEST EDITION OF SMACNA STANDARDS FOR 1" PRESSURE CLASS AND SEAL CLASS A.
5. METAL DUCTWORK: FABRICATE ALL DUCTWORK, HOUSINGS, DAMPERS, AND ALL OTHER DUCT RELATED ACCESSORIES FROM GALVANIZED STEEL SHEETS.
6. INSTALL ALL DUCTWORK ABOVE CEILING AND TIGHT TO UNDERSIDE OF STRUCTURE ABOVE UNLESS OTHERWISE INDICATED.
7. CHANGES TO DUCTWORK DUE TO FIELD CONDITIONS SHALL BE MADE PROVIDED THAT THE DUCT FREE AREA IS MAINTAINED AND SHALL BE SUBMITTED TO THE ENGINEER FOR APPROVAL.
8. FLEXIBLE DUCTWORK: PROVIDE INSULATED U.L. LISTED CLASS 1 DUCT COMPLYING WITH NFPA 90A. THERMAFLEX G-KM OR APPROVED EQUAL. MAXIMUM LENGTH SHALL BE 8 LINEAR FEET.
9. LEAKAGE:
   a. ALL NEW DUCT JOINTS SHALL BE SEALED WITH HARDCAST 601 OR APPROVED EQUAL.
   b. LEAKAGE TESTING FOR ALL NEW DUCTWORK SHALL BE PER SMACNA.
   c. PERFORM ALL TESTING AFTER THE SEALS HAVE CURED COMPLETELY AND BEFORE COVERING WITH INSULATION OR CONCEALING IN MASONRY OR OTHER PARTITION MATERIAL.

D. TESTING AND BALANCING

1. SCOPE
   a. AN INDEPENDENT CONTRACTOR NEBB OR AABC CERTIFICATION SHALL PROVIDE ALL LABOR, MATERIALS, AND EQUIPMENT TO PERFORM ALL OPERATIONS REQUIRED FOR COMPLETE BALANCING OF THE AIR SYSTEMS AND WATER SYSTEMS TO THE RELATED WORK AS INDICATED ON DRAWINGS AND SPECIFIED HEREIN.
   b. BALANCING SHALL NOT BE PERFORMED UNTIL ALL MECHANICAL EQUIPMENT IS PROPERLY INSTALLED AND IS 100% OPERATIONAL, ALL TEMPERATURE CONTROLS ARE INSTALLED AND CALIBRATED, AND ALL SYSTEMS ARE CLEANED, PIPES, AND STRAINERS FLUSHED, AND CLEAN FILTERS INSTALLED.
   c. BALANCING SHALL BE WITHIN +/- 10% OF THE TOTAL INDICATED VALUES.
   d. IT IS THE INTENT OF THIS SPECIFICATION TO ENSURE THAT THE ENTIRE PROJECT IS SUBSTANTIALLY COMPLETE SO THAT ALL COMPONENTS OF ALL MECHANICAL SYSTEMS CAN BE PUT INTO NORMAL OPERATION WITH ALL WINDOWS AND DOORS CLOSED AND BALANCED IN THAT CONDITION. IN NO CASE IS THE CONTRACTOR TO PERFORM HIS WORK IN A PIECEMEAL FASHION.
2. BELTS AND SHEAVE CHANGES REQUIRED TO MEET SPECIFIED AIR VOLUMES SHALL BE MADE AT NO ADDITIONAL EXPENSE TO THE OWNER.
3. BALANCING REPORT – AFTER FINAL ADJUSTMENTS ARE COMPLETED, THE HVAC SYSTEM SHALL BE TESTED, AND THE FOLLOWING INFORMATION RECORDED AND INCLUDED IN THE BALANCING REPORT. (2 SETS)
   a. EACH PIECE OF EQUIPMENT SHALL BE IDENTIFIED AS TO LOCATION, SERVICE MANUFACTURER, AND MODEL NUMBER.
   b. ELECTRICAL DATA, MEASURED STATIC PRESSURES (EXTERNAL AND TOTAL), AND WATER FLOWS (GPM, HEAD, ETC.).
   c. TRAVERSE MAIN SUPPLY DUCT AND INDICATE SIZE. NOTE: TRAVERSE SHALL BE DONE IN A LOCATION NEAR THE FAN BUT AVOIDING TURBULENCE.
   d. EACH AIR DEVICE (NEW AND EXISTING) SHALL BE IDENTIFIED AS TO LOCATION AND SERVICE, TYPE, AND SIZE.
   e. BALANCE REPORT SHALL INDICATE REQUIRED CFM AND RESULTANT CFM FOR EACH AIR DEVICE.
4. SHOULD TOTAL INDICATED AIRFLOWS NOT BE ACHIEVABLE, CONTRACTOR SHALL STOP WORK, NOTIFY OWNER, ENGINEER AND ARCHITECT. PROPORTIONAL BALANCING IS NOT PERMITTED. WORK SHALL NOT RESUME UNTIL CORRECTIVE MEASURES HAVE BEEN COMPLETED.

CONSTRUCTION PHASING GENERAL SCOPE

PHASE 1

DEMOLITION:

ALL 2ND FLOOR DUCTWORK, HOT WATER PIPING, CHILLED WATER PIPING, AND CONTROLS SHALL BE REMOVED/ABANDONED AND DISPOSED OF PER CODE. REMOVE 3 EXISTING ROOFTOP PACKAGE UNITS (RTU-3, RTU-4, & RTU-5) FROM EXISTING ROOF CURB. EXISTING ROOF CURBS, HOT WATER COILS, AND DUCTWORK TO REMAIN.

NEW WORK:

SET ALL NEW ROOFTOP PACKAGE UNITS, OUTDOOR CONDENSERS, AND ROOF EXHAUST FANS.
INSTALL ALL NEW VAV BOXES, DUCTWORK, HOT WATER PIPING, AND CONTROLS ON 2ND FLOOR (RTU-2)
INSTALL NEW HOT WATER CIRCULATOR PUMPS WITH NEW HOT WATER PIPING FROM THE BASEMENT TO THE 3RD FLOOR.
INSTALL NEW SHUT-OFF VALVES AT EACH FLOOR OUTSIDE THE CHASE.
INSTALL NEW HOT WATER PIPING AND CONTROLS ON 3RD FLOOR.
INSTALL NEW DUCTWORK, HOT WATER PIPING, AND CONTROLS FOR 3RD FLOOR (RTU-6)
INSTALL NEW REFRIGERANT LINES FROM THE ROOF CONDENSERS TO THE 1ST FLOOR CEILING LEVEL.
INSTALL NEW DUCTWORK FROM ROOF TO CEILING LEVEL OF THE 1ST FLOOR (RTU-1)
ALL WORK SHALL BE DONE UNTIL COMPLETION OF A COMPLETE OPERATING SYSTEM

PHASE 2:

DEMOLITION:

ALL 1ST FLOOR DUCTWORK, HOT WATER PIPING, CHILLED WATER PIPING, EQUIPMENT, AND CONTROLS SHALL BE REMOVED/ABANDONED AND DISPOSED OF PER CODE.

NEW WORK:

INSTALL ALL NEW VAV BOXES, DUCTWORK, HOT WATER PIPING, AND CONTROLS ON 1ST FLOOR (RTU-1)
CONNECT HOT WATER PIPING TO PHASE 1 SHUT-OFF VALVES AT CHASE.
INSTALL ALL NEW SPLIT SYSTEM HEAT PUMPS, DUCTWORK, REGISTERS, AND CONTROLS.
EXTEND NEW REFRIGERANT LINES FROM PHASE 1 TO BASEMENT CEILING SPACE BELOW.
ALL WORK SHALL BE DONE UNTIL COMPLETION OF A COMPLETE OPERATING SYSTEMS

PHASE 3:

DEMOLITION:

ALL BASEMENT DUCTWORK, HOT WATER PIPING, CHILLED WATER PIPING, EQUIPMENT, AND CONTROLS SHALL BE REMOVED/ABANDONED AND DISPOSED OF PER CODE.

NEW WORK:

INSTALL ALL NEW AIR HANDLERS, DUCTWORK, HOT WATER PIPING, AND CONTROLS ON THE BASEMENT FLOOR.
CONNECT HOT WATER PIPING TO NEW HOT WATER PIPING FROM PHASE 1
EXTEND AND CONNECT REFRIGERANT LINES TO THE APPLICABLE AIR HANDLING UNIT PER MFR. AND CODE.
ALL WORK SHALL BE DONE UNTIL COMPLETION OF A COMPLETE OPERATING SYSTEMS.
BUILDING NETWORK CONTROLS SHALL BE INSTALLED AND CONFIGURED FOR WHOLE BUILDING SYSTEM.

NATURAL VENTILATION TABLES FOR BASE CAMP
Determined per 2012 Virginia Mechanical Code Section 402

AHU-7

ROOM NAMES	TOTAL EXTERIOR DOOR/ WINDOW OPENINGS (FT^2)	TOTAL OPENINGS(FT^2) TO ADJACENT AREA W/ NATURAL VENTILATION	FLOOR AREA	4% FLOOR AREA	8% FLOOR AREA
ENTRY	50		45	1.8	
STAIRS			240	9.6	
ROTUNDRA		50	450	18.0	36.0
		TOTAL REQUIRED OPENINGS	29.4		

AHU-8

ROOM NAMES	TOTAL EXTERIOR DOOR/ WINDOW OPENINGS (FT^2)	TOTAL OPENINGS(FT^2) TO ADJACENT AREA W/ NATURAL VENTILATION	FLOOR AREA	4% FLOOR AREA	8% FLOOR AREA
STUDY	48		90	3.6	
BOOKSTORE	38		116	4.6	
CORRIDOR		57	195	7.8	15.6
		TOTAL REQUIRED OPENINGS	16.0		

AHU-9

ROOM NAMES	TOTAL EXTERIOR DOOR/ WINDOW OPENINGS (FT^2)	TOTAL OPENINGS(FT^2) TO ADJACENT AREA W/ NATURAL VENTILATION	FLOOR AREA	4% FLOOR AREA	8% FLOOR AREA
STUDY	48		90	3.6	
BOOKSTORE	38		116	4.6	
CORRIDOR		57	195	7.8	15.6
		TOTAL REQUIRED OPENINGS	16.0		

VENTILATION CALCULATION TABLES

Project Name: Handley Library | Unit Total Supply Air: 2000 CFM
Date: 12/4/18 | Unit Total Outdoor Air: 200 CFM
Unit Designation: AHU-1

A Room Number	B Description	C Area (ft^2) (Az)	D Area Outdoor Air Rate per VMC Table 403.3 (Ra)	E Area Outdoor Air (RaAz)	F Occupant Load Rate per VMC Table 403.3 (People/1000 ft2)	G Occupancy C x F/1000 (Pz)	H Occupant Outdoor Air Rate per VMC Table 403.3 (Rp)	I Occupant Outdoor Air (RpPz)	J Breathing Zone Outdoor Air (Vbz = RpPz + RaAz)	K Zone Air Distribution Effectiveness (Ez)	L Zone Outdoor Air (Voz = Vbz / Ez)	M Supply Air Design (Vpz)	N Secondary Recirculated Air	O Outdoor Air Fraction (Zp = Voz / Vpz)
[illegible]														

Project Name: Handley Library | Unit Total Supply Air: 1500 CFM
Date: 12/4/18 | Unit Total Outdoor Air: 200 CFM
Unit Designation: AHU-4

A Room Number	B Description	C Area (ft^2) (Az)	D Area Outdoor Air Rate per VMC Table 403.3 (Ra)	E Area Outdoor Air (RaAz)	F Occupant Load Rate per VMC Table 403.3 (People/1000 ft2)	G Occupancy C x F/1000 (Pz)	H Occupant Outdoor Air Rate per VMC Table 403.3 (Rp)	I Occupant Outdoor Air (RpPz)	J Breathing Zone Outdoor Air (Vbz = RpPz + RaAz)	K Zone Air Distribution Effectiveness (Ez)	L Zone Outdoor Air (Voz = Vbz / Ez)	M Supply Air Design (Vpz)	N Secondary Recirculated Air	O Outdoor Air Fraction (Zp = Voz / Vpz)
[illegible]														

Project Name: Handley Library | Unit Total Supply Air: 15500 CFM
Date: 12/4/18 | Unit Total Outdoor Air: 1800 CFM
Unit Designation: RTU-1

A Room Number	B Description	C Area (ft^2) (Az)	D Area Outdoor Air Rate per VMC Table 403.3 (Ra)	E Area Outdoor Air (RaAz)	F Occupant Load Rate per VMC Table 403.3 (People/1000 ft2)	G Occupancy C x F/1000 (Pz)	H Occupant Outdoor Air Rate per VMC Table 403.3 (Rp)	I Occupant Outdoor Air (RpPz)	J Breathing Zone Outdoor Air (Vbz = RpPz + RaAz)	K Zone Air Distribution Effectiveness (Ez)	L Zone Outdoor Air (Voz = Vbz / Ez)	M Supply Air Design (Vpz)	N Secondary Recirculated Air	O Outdoor Air Fraction (Zp = Voz / Vpz)
[illegible]														

Project Name: Handley Library | Unit Total Supply Air: 1200 CFM
Date: 12/4/18 | Unit Total Outdoor Air: 90 CFM
Unit Designation: RTU-5

A Room Number	B Description	C Area (ft^2) (Az)	D Area Outdoor Air Rate per VMC Table 403.3 (Ra)	E Area Outdoor Air (RaAz)	F Occupant Load Rate per VMC Table 403.3 (People/1000 ft2)	G Occupancy C x F/1000 (Pz)	H Occupant Outdoor Air Rate per VMC Table 403.3 (Rp)	I Occupant Outdoor Air (RpPz)	J Breathing Zone Outdoor Air (Vbz = RpPz + RaAz)	K Zone Air Distribution Effectiveness (Ez)	L Zone Outdoor Air (Voz = Vbz / Ez)	M Supply Air Design (Vpz)	N Secondary Recirculated Air	O Outdoor Air Fraction (Zp = Voz / Vpz)
[illegible]														

[illegible] (remaining ventilation calculation tables for AHU-2, AHU-3, AHU-5, AHU-6, RTU-2, RTU-3, RTU-4 and other units)

MECHANICAL SYMBOLS

PLAN SYMBOLS

- RTU 1 — MECHANICAL EQUIPMENT IDENTIFICATION
- DETAIL IDENTIFICATION — DETAIL NUMBER AND DRAWING NUMBER AS INDICATED.
- NEW WORK NOTE IDENTIFICATION
- POINT OF CONNECTION TO EXISTING
- END OF DEMOLITION

MECHANICAL SYMBOLS

- 100 — SUPPLY DIFFUSER/TYPE IDENTIFICATION CFM
- RETURN REGISTER/TYPE IDENTIFICATION
- EXHAUST REGISTER/TYPE IDENTIFICATION
- AIR FLOW DIRECTION
- NEW SUPPLY AIR DUCTWORK
- NEW RETURN AIR DUCTWORK
- EXISTING SUPPLY AIR DUCTWORK
- EXISTING RETURN AIR DUCTWORK
- EXISTING SUPPLY/RETURN/EXHAUST AIR DUCTWORK TO REMAIN (DEMO PLANS ONLY)
- FLEXIBLE DUCTWORK-PROVIDE VOLUME DAMPER ON ALL FLEX DUCT WITH LOCKING QUADRANTS
- DUCTWORK TURNED UP OR TOWARDS
- DUCTWORK TURNED DOWN OR AWAY
- AD — ACCESS DOOR, SIZED AS INDICATED
- FD — FIRE DAMPER WITH ACCESS DOOR
- SD — SMOKE DAMPER WITH ACCESS DOOR
- VOLUME DAMPER WITH LOCKING QUADRANTS
- M — MODULATING MOTORIZED DAMPER
- T — DUCT MOUNTED TEMPERATURE SENSOR
- 1-4 — VAV BOX LABEL (RTU# – VAV#)
- T, AHU-# — WALL THERMOSTAT
- H, AHU-# — WALL HUMIDISTAT
- SD — DUCT SMOKE DETECTOR
- U — 3/4" DOOR UNDERCUT
- CO2 — CARBON DIOXIDE WALL SENSOR
- D — CONDENSATE DRAIN

MECHANICAL SYMBOLS

ABBREVIATIONS

ABV	ABOVE
ACU	AIR CONDITIONING UNIT
AD	ACCESS DOOR
AFF	ABOVE FINISHED FLOOR
AHU	AIR HANDLING UNIT
BAS	BUILDING AUTOMATION SYSTEM
BHP	BRAKE HORSEPOWER
BOD	BOTTOM OF DUCT
BDD	BACK DRAFT DAMPER
BFC	BELOW FINISHED CEILING
CLG	CEILING
CP	CONDENSATE PUMP
D	CONDENSATE DRAIN
DN	DOWN
(E)	EXISTING
EA	EXHAUST AIR
EHC	ELECTRIC HEATING COIL
EF	EXHAUST FAN
(ER)	EXISTING RELOCATED
F	FAN
FC	FLEXIBLE CONNECTION
FD	FIRE DAMPER
HHWS	HEATING HOT WATER SUPPLY
HHWR	HEATING HOT WATER RETURN
MHP	MOTOR HORSEPOWER
(N)	NEW
NC	NORMALLY CLOSED
NO	NORMALLY OPEN
OA	OUTSIDE AIR
RA	RETURN AIR
RTU	ROOFTOP UNIT
SA	SUPPLY AIR
SL	SOUND LINED DUCT
SS	STAINLESS STEEL
TR	TRANSFER AIR
TOD	TOP OF DUCT
VAV	VARIABLE AIR VOLUME
VFD	VARIABLE FREQUENCY DRIVE
W/O	WALL OPENING ABOVE CEILING
WSHP	WATER SOURCE HEAT PUMP

HANDLEY LIBRARY
100 WEST PICCADILLY STREET
WINCHESTER, VA 22601

PAINTER-LEWIS P.L.C.
817 CEDAR CREEK GRADE
SUITE 120
WINCHESTER, VA 22601
t: (540) 662-5792
f: (540) 662-5793
office@painterlewis.com

COMFORT DESIGN, INC.
620 PENNSYLVANIA AVENUE
WINCHESTER, VA 22601
t: (540) 665-2846
f: (540) 665-0038

COMMONWEALTH OF VIRGINIA
JOSHUA L. CATLETT
No. 042501
03/26/19
PROFESSIONAL ENGINEER

SCALE: AS NOTED

DATE: 3/26/2019
PERMIT DOCUMENTS

REVISIONS: BASED ON

DESCRIPTION:
PERMIT/CONSTRUCT. DOCUMENTS

SHEET:
M1.0

COPYRIGHT: AUG. 26, 2016

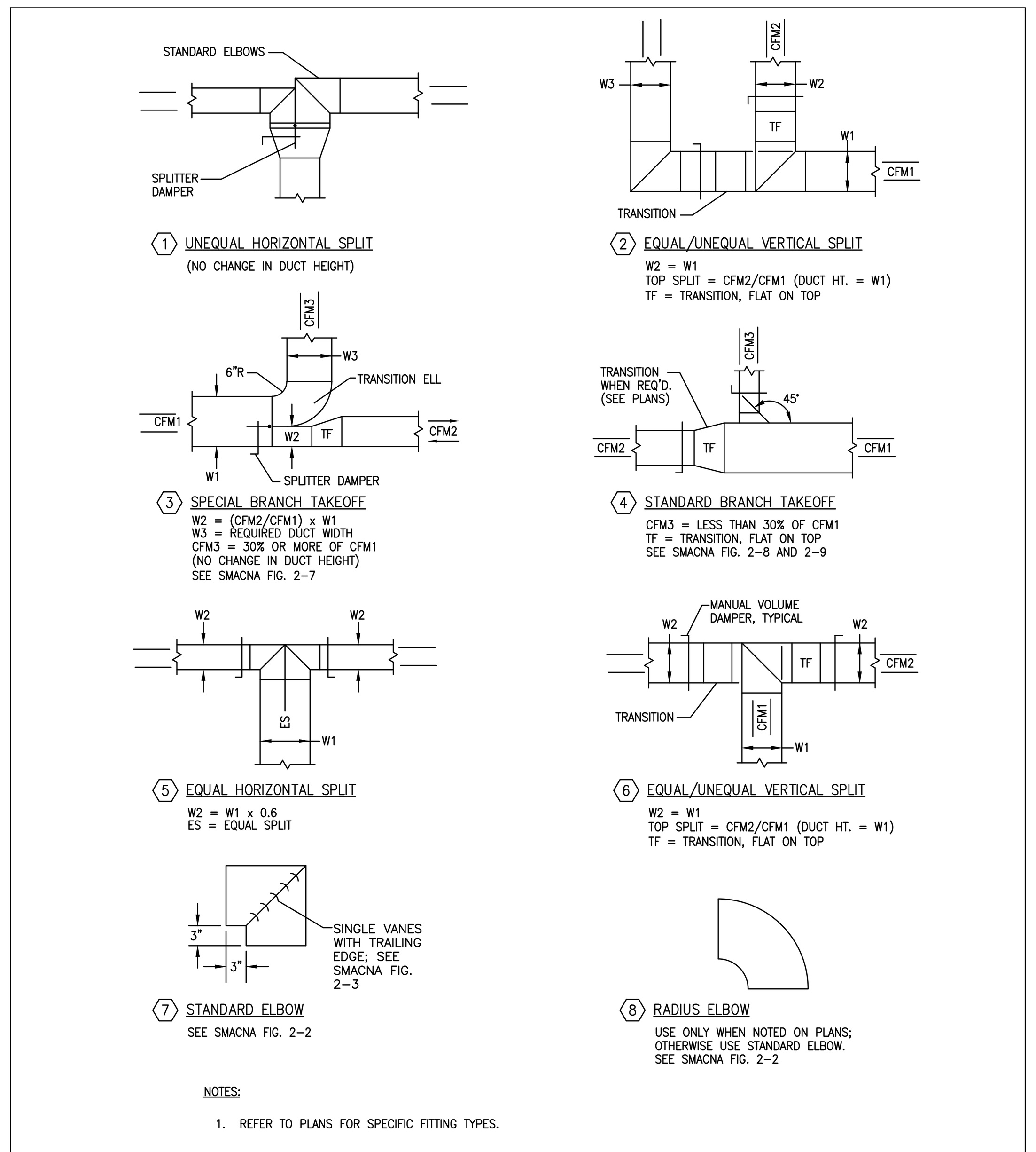

1 DUCTWORK FITTINGS DETAIL
NOT TO SCALE

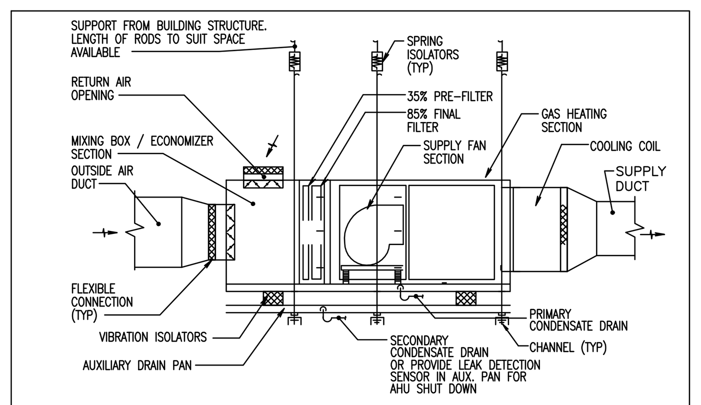

2 AIR HANDLING UNIT DETAIL
NOT TO SCALE

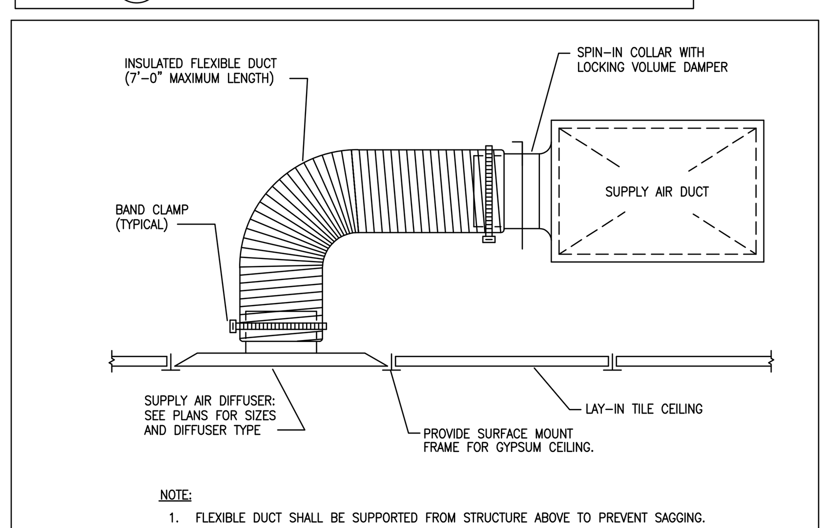

3 SUPPLY AIR DIFFUSER IN ACOUSTICAL/GYPSUM CEILING
NOT TO SCALE

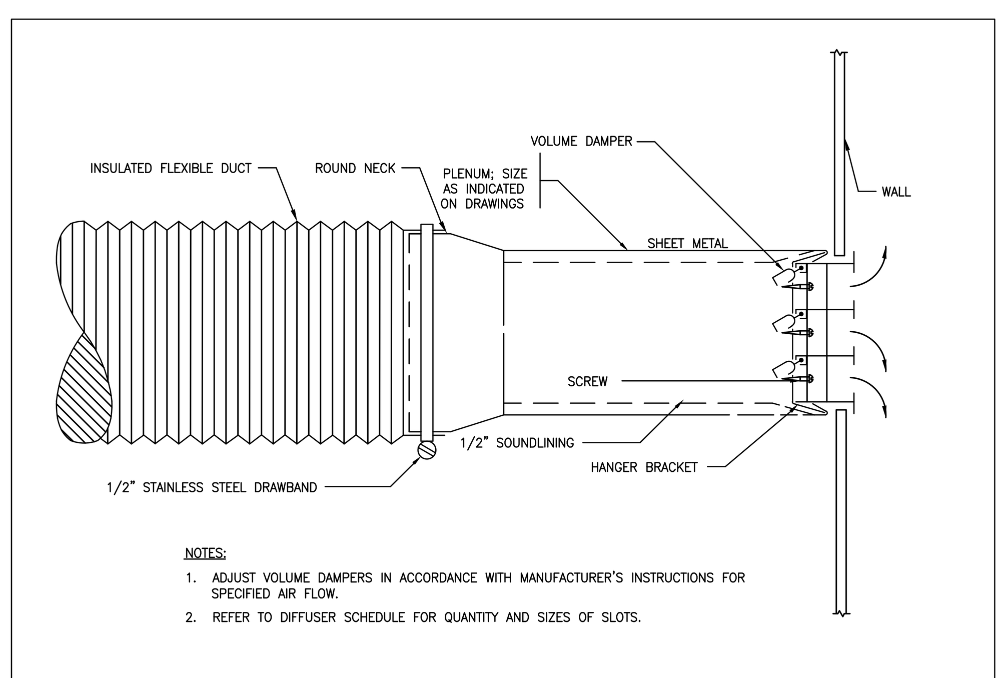

4 SIDEWALL DIFFUSER/GRILLE DETAIL
NOT TO SCALE

HOT WATER/AC ROOFTOP UNIT SCHEDULE

UNIT DESIGNATION	TOTAL CFM	MIN. O.A. CFM	NOMINAL TONS	SUPPLY FAN FLA	FAN HP	E.S.P. IN. W.C.	COOLING TOTAL MBH	COOLING SENS MBH	OA DB DEG F	SEER AT ARI	HW COIL TOTAL MBH	HW PUMP TOTAL GPM	HW FLUID TEMP. °F	PRESS. DROP FT	V/PH/HZ	MCA	MOCP	WEIGHT LBS	BASIS OF DESIGN	NOTES
RTU 3	1,200	SEE O/A TABLES	3	7.3	0.75	1.0	35.71	26.12	95	17.0	70.0	7.00	180.0	5.60	208/3/60	24	30	701	TRANE THC037E3R0A	1–7
RTU 4	1,000	SEE O/A TABLES	3	7.3	0.75	1.0	34.56	25.52	95	17.0	60.0	6.00	180.0	5.60	208/3/60	24	30	701	TRANE THC037E3R0A	1–7
RTU 5	1,000	SEE O/A TABLES	3	7.3	0.75	1.0	34.56	25.52	95	17.0	60.0	6.00	180.0	5.60	208/3/60	24	30	701	TRANE THC037E3R0A	1–7
RTU 6	2,000	SEE O/A TABLES	5	9.4	1.0	1.0	58.21	43.40	95	17.0	98.1	10.1	180.0	4.96	208/3/60	33	45	953	TRANE THC067E3R0A	1–6

1. SUPPLY AIR BLOWER SHALL BE ADJUSTED TO TOTAL CFM PER SCHEDULE.
2. OUTSIDE AIR DAMPER SHALL BE SET TO MINIMUM OUTSIDE AIR CFM.
3. RTU'S SHALL BE INSTALLED PER. MFR. AS REQUIRED FOR COMPLETE OPERATION OF SYSTEM.
4. 0–100% COMPARATIVE ENTHALPY ECONOMIZER WITH POWER EXHAUST.
5. 2" MERV 8 FILTERS WITH CLOGGED FILTER SWITCH.
6. RELIATEL BACNET CONTROLLER WITH ALL CONTROLS TO ACCOMPLISH SEQUENCES OF OPERATION.
7. EXISTING HOT WATER COILS ARE TO REMAIN FOR REUSE WITH NEW RTU–3, RTU–4, AND RTU–5. PROVIDE NEW CONTROLS AND VALVES AS REQUIRED.

VAV TERMINAL (HEATING/COOLING) SCHEDULE

MARK	VAV OPERATING CHARACTERISTICS AT INDICATED CFM					TRANE MFR.	HOT WATER REHEAT CAPACITY						INLET DUCT SIZE (INCHES)	REMARKS
	DESIGN CFM	MIN. CFM	RAD. NC	DISCH. NC	MAX. STATIC INLET PRESS.	MODEL NO.	HEATING CFM	GPM	P.D. FT	E.A.T.	L.A.T.	V/Ø/HZ		
1–1	2400	480	<15	<15	0.75"	VCWF14	1440	5.4	6.90	55	89.6	208/1/60	14	1–2
1–2	2400	480	<15	<15	0.75"	VCWF14	1440	5.4	6.90	55	89.6	208/1/60	14	1–2
1–3	2000	400	<15	<15	0.75"	VCWF12	1200	4.2	8.41	55	87.3	208/1/60	12	1–2
1–4	2000	400	<15	<15	0.75"	VCWF12	1200	4.2	8.41	55	87.3	208/1/60	12	1–2
1–5	500	100	<15	<15	0.75"	VCWF06	300	1.2	2.03	55	90.0	208/1/60	6	1–2
1–6	4000	800	<15	<15	0.75"	VCWF16	2000	7.2	12.8	55	88.2	208/1/60	16	1–2
1–7	2000	400	<15	<15	0.75"	VCWF12	1200	4.2	8.41	55	87.3	208/1/60	12	1–2
1–8	200	40	<15	<15	0.75"	VCWF04	200	0.9	1.35	55	96.7	208/1/60	4	1–2
2–1	1800	360	<15	<15	0.75"	VCWF12	1080	3.9	7.49	55	88.7	208/1/60	12	1–2
2–2	1800	360	<15	<15	0.75"	VCWF12	1080	3.9	7.49	55	88.4	208/1/60	12	1–2
2–3	2400	480	<15	<15	0.75"	VCWF14	1440	5.4	6.90	55	89.6	208/1/60	14	1–2
2–4	400	80	<15	<15	0.75"	VCWF06	240	1.0	1.62	55	93.5	208/1/60	6	1–2
2–5	2520	500	<15	<15	0.75"	VCWF14	1512	5.6	7.28	55	89.0	208/1/60	14	1–2
2–6	2520	500	<15	<15	0.75"	VCWF14	1512	5.6	7.28	55	89.0	208/1/60	14	1–2
2–7	500	100	<15	<15	0.75"	VCWF06	300	1.1	2.03	55	90.0	208/1/60	6	1–2

NOTES:
1. PROVIDE EACH VAV BOX W/ UC210 DDC CONTROLLER, MODULATING ACTUATOR & HOT WATER VALVE, DISCHARGE AIR SENSOR, ZONE TEMP. SENSOR, & CO2 SENSOR
2. DDC CONTROLLER SHALL BE FACTORY MOUNTED AND PROGRAMMED TO ACCOMPLISH THE SEQUENCE OF OPERATION.

DIFFUSER, REGISTER AND GRILLE SCHEDULE

TYPE	SERVICE	CFM RANGE	FACE DIMENSION	NECK DIMENSION	FINISH	BASIS OF DESIGN	NOTES
(1)	SUPPLY AIR DIFFUSER	0 – 125	24"x24"	6"ø	WHITE	TUTTLE & BAILEY: 1300	1,2,3,4,8
		126 – 250		8"ø			
		251 – 400		10"ø			
		401 – 650		12"ø			
		651 – 850		14"ø			
(2)	SUPPLY AIR DIFFUSER	0 – 125	12"x12"	6"ø	WHITE	TUTTLE & BAILEY: 1300A	1,2,3,4,8
		126 – 250		8"ø			
(3)	SUPPLY AIR DIFFUSER	401 – 650	12"x10"	12"ø	WHITE	TUTTLE & BAILEY: T54	1,2,6,8
(4)	SUPPLY AIR DIFFUSER	251 – 400	12"x8"	10"ø	WHITE	TUTTLE & BAILEY: T54	1,2,6,8
(5)	SUPPLY AIR DIFFUSER	126 – 250	10"x6"	8"ø	WHITE	TUTTLE & BAILEY: T54	1,2,6,8
(6)	SUPPLY AIR DIFFUSER	400	18"x8"	N/A	WHITE	TUTTLE & BAILEY: T54	1,2,6,7,8
(7)	SUPPLY AIR DIFFUSER	1200	60"x8"	N/A	WHITE	TUTTLE & BAILEY: T54	1,2,6,7,8
⟨1⟩	RETURN AIR DIFFUSER	0 – 125	24"x24"	6"ø	WHITE	TUTTLE & BAILEY: PR	1,2,5
		126 – 250		8"ø			
		251 – 400		10"ø			
		401 – 600		12"ø			
		601 – 850		14"ø			
		851 – 1000		16"ø			
⟨2⟩	RETURN AIR DIFFUSER	0 – 125	12"x12"	6"ø	WHITE	TUTTLE & BAILEY: PR	1,2,5
		126 – 250		8"ø			
⟨3⟩	RETURN AIR DIFFUSER	126 – 250	12"x8"	8"ø	WHITE	TUTTLE & BAILEY: T75D	1,2,6
⟨4⟩	RETURN AIR DIFFUSER	601 – 850	22"x10"	14"ø	WHITE	TUTTLE & BAILEY: T75D	1,2,6
⟨5⟩	RETURN AIR DIFFUSER	851 – 1000	24"x12"	16"ø	WHITE	TUTTLE & BAILEY: T75D	1,2,6
⟨6⟩	RETURN AIR DIFFUSER	1851 – 2250	24"x24"	N/A	WHITE	TUTTLE & BAILEY: T75D	1,2,6
⟨7⟩	RETURN AIR DIFFUSER	2251 – 2800	36"x20"	N/A	WHITE	TUTTLE & BAILEY: T75D	1,2,6
⟨8⟩	RETURN AIR DIFFUSER	400	36"x10"	N/A	WHITE	TUTTLE & BAILEY: T75D	1,2,6,7
⟨9⟩	RETURN AIR DIFFUSER	3600	42"x24"	N/A	WHITE	TUTTLE & BAILEY: T75D	1,2,6,7
⟨10⟩	RETURN AIR DIFFUSER	2800	72"x24"	N/A	WHITE	TUTTLE & BAILEY: T75D	1,2,6,7
⟨11⟩	RETURN AIR DIFFUSER	600	24"x16"	N/A	WHITE	TUTTLE & BAILEY: T75D	1,2,6,7
[1]	WALL/DOOR TRANSFER	126 – 250	12"x12"	--	WHITE	TUTTLE & BAILEY: DXFR	1,2,6

NOTES:
1. COORDINATE WITH OWNER COLOR & FINISH.
2. CONTRACTOR SHALL CONFIRM ACTUAL FINAL DIFFUSER DIMENSIONS WITH VENDOR, AND COORDINATE WITH CEILING/DOOR/WALL TYPE AS NECESSARY.
3. 4 WAY THROW PATTERN.
4. PROVIDE WITH OPPOSED BLADE DAMPER.
5. PERFORATED PATTERN
6. HORIZONTAL BAR DIRECTION
7. FIELD CONFIRM FINAL DIMENSIONS PRIOR TO PURCHASE.
8. PROVIDE INSULATED BACKS.

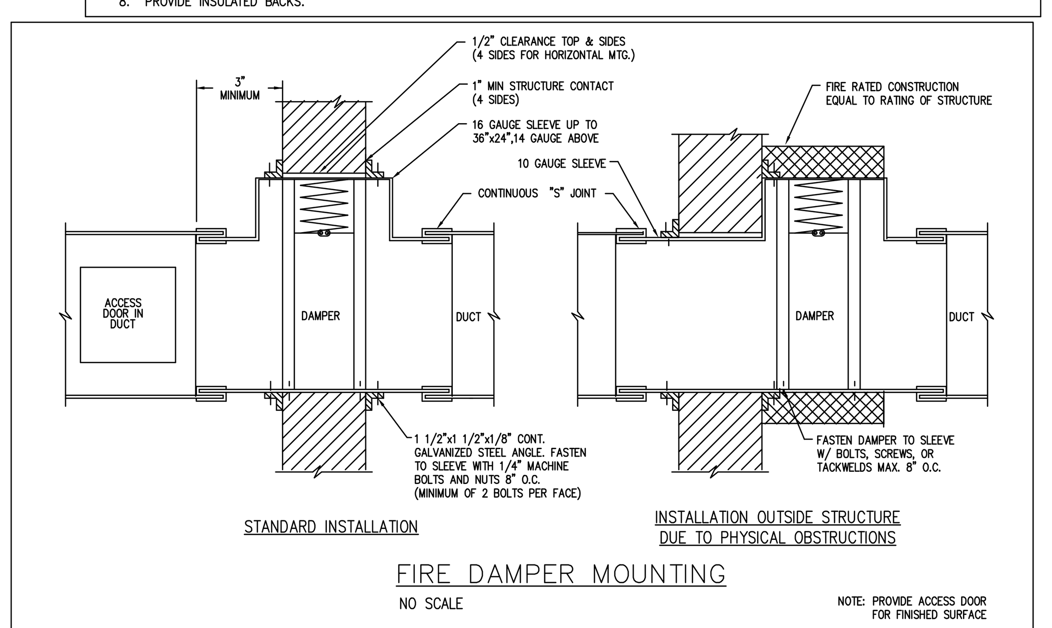

5 RATED WALL OPENING FIRE DAMPER
NOT TO SCALE

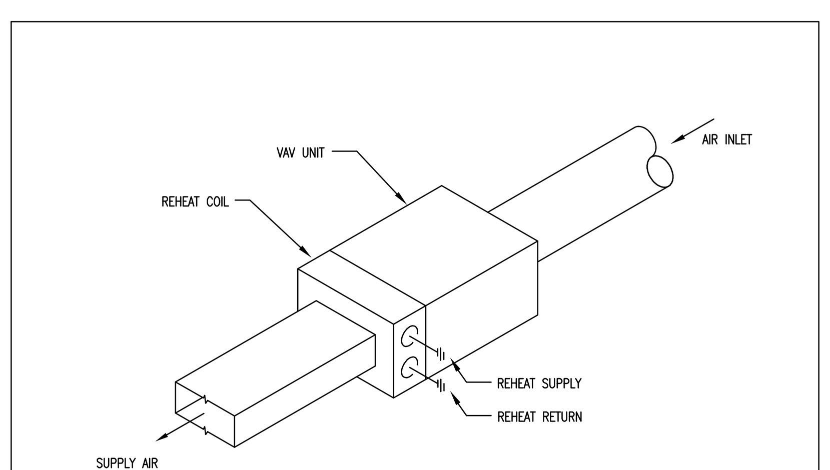

6 VAV UNIT WITH REHEAT COIL
NOT TO SCALE

GAS PACKAGE ROOFTOP UNIT SCHEDULE

UNIT DESIGNATION	TOTAL CFM	MIN. O.A. CFM	NOMINAL TONS	FAN FLA	FAN HP (BHP)	E.S.P. IN. W.C.	GAS HEATER EFF.	GAS HTR INPUT (BTUH)	GAS HTR OUTPUT (BTUH)	COOLING TOTAL MBH	COOLING SENS MBH	OA DB DEG F	EER AT ARI	IEER AT ARI	V/PH/HZ	MCA	MOCP	WEIGHT LBS	BASIS OF DESIGN	NOTES
RTU 1	15,500	SEE O/A TABLES	50	40.7	15	1.5	80.0%	750,000	600,000	556.88	411.71	95	10.4	14.5	208/3/60	252	300	7500	TRANE YCH600BET–6B3M35	1–6
RTU 2	12,000	SEE O/A TABLES	40	29.5	10	1.5	80.0%	750,000	600,000	463.34	327.28	95	11.00	14.7	208/3/60	213	250	7500	TRANE YCH480BET–6B2K35	1–6

NOTES:
1. THREE (3) COMPRESSORS WITH 5 STAGE OF MECHANICAL COOLING & MODULATING GAS HEATING.
2. PROVIDE THE FOLLOWING ACCESSORIES/FEATURES: SUPPLY FAN VFD W/ BYPASS FOR VAV OPERATION, CONDENSER COIL GUARDS, DUCT MOUNTED CO2 SENSOR FOR DCV, FLAT 14" ROOF CURB, R/A SMOKE DETECTOR, HORIZONTAL SUPPLY/RETURN DUCT CONNECTIONS THRU UNIT CASING, AND CONDENSATE OVERFLOW SWITCH.
3. RELIATEL BACNET CONTROLLER WITH ALL CONTROLS TO ACCOMPLISH SEQUENCES OF OPERATION IN CONTRACT DOCUMENTS.
4. 2" MERV 8 THROWAWAY FILTERS WITH CLOGGED FILTER SWITCH
5. 0–100% COMPARATIVE ENTHALPY ECONOMIZER W/ TRAQ AIRFLOW MEASURING AND 100% POWER EXHAUST USING STATITRAC BUILDING PRESSURE CONTROL.
6. PROVIDE STARTUP AND 1 YEAR WARRANTY LABOR BY EQUIPMENT MFR.
7. PROVIDE VIBRATION ELIMINATORS ISOLATION RAIL SUITABLE FOR USE BETWEEN STRUCT. STEEL AND RTU BASE

PUMP SCHEDULE

MARK	DESCRIPTION	PUMP DATA					MOTOR DATA			TRIPLE DUTY VALVE	SUCTION DIFFUSER	NOTES
		BASIS OF DESIGN	SIZE	RPM	GPM	HEAD (FT)	HP	VOLT	PHASE			
P 1	PRIMARY/SECONDARY HW SYSTEM CIRCULATOR	BELL & GOSSETT e–1510	2BD	1750	130	80	5	208/230	3	YES	YES	1 THRU 6

NOTES:
1. PUMP SHALL NOT EXCEED 1750 RPM. PROVIDE SUCTION DIFFUSER & AUTO RE–START ON ALL PUMPS. PROVIDE PHASE PROTECTION PER MANUFACTURER. PRIMARY PUMP NORMALLY ON AND SECONDARY PUMP ON STAND–BY.
2. SEE DRAWINGS FOR PIPING DIAGRAMS & SPECIFICATIONS TO PROVIDE AUTOMATIC RE–START MOTOR STARTERS, VIBRATION ISOLATORS, ETC.
3. ALL HOT WATER PIPING SHALL BE CLEARLY LABELED PER ANSI A13.1 STANDARD WITH DIRECTION OF FLOW.
4. SEE DRAWINGS FOR PIPING REQUIREMENTS, AIR SEPARATORS, MAKE–UP ASSY, AIR VENTS, EXP. TANKS, FLEXIBLE FITTINGS, ETC.
5. PROVIDE VIBRATION ISOLATION SPRINGS ON ALL PUMPS.
6. PRIMARY PUMP SHALL ENERGIZE WHEN OUTSIDE TEMPERATURE SENSOR READS 40 F OR BELOW.
7. PROVIDE TECHNOLOGIC INTELLIGENT PUMP CONTROLLER AND STANDARD DISCONNECT SWITCH. COORDINATE WITH ELECTRICAL.

LOUVER SCHEDULE

TYPE	SERVICE	CFM	DIMENSIONS WxLxH	FREE AREA FT2	FINISH	BASIS OF DESIGN	NOTES
L 1	OUTSIDE AIR INTAKE	4000	68"x24"x6"	5.55	ALUMINUM	GREENHECK: ESJ–602	1–2
L 2	OUTSIDE AIR INTAKE	6000	36"x60"x6"	8.19	ALUMINUM	GREENHECK: ESJ–602	1–2
L 3	OUTSIDE AIR INTAKE	2000	48"x18"x6"	2.73	ALUMINUM	GREENHECK: GRSI–30	1–3

1. COORDINATE WITH OWNER FINAL COLOR & FINISH (IF PAINTED).
2. CONTRACTOR SHALL CONFIRM ACTUAL FINAL DIMENSIONS WITH VENDOR.
3. PROVIDE 12" ROOF CURB & MOTORIZED DAMPER. INTERLOCK DAMPER W/ VENTILATION CONTROLS.

SPLIT SYSTEM HOT WATER COIL/AC SCHEDULE

UNIT DESIGNATION		INDOOR UNIT																OUTDOOR UNIT									
INDOOR	OUTDOOR	TOTAL CFM	MIN. O.A. CFM	NOMINAL TONS	FAN HP (BHP)	E.S.P. IN. W.C.	V/PH/HZ	MCA	MOCP	WEIGHT (LBS)	HW COIL TOTAL MBH	REHEAT COIL MBH	HW PUMP TOTAL GPM	PRESS. DROP FT	HW FLUID TEMP. °F	BASIS OF DESIGN	TOTAL MBH	SENS MBH	OA DB DEG F	EER AT ARI	V/PH/HZ	MCA	MOCP	WEIGHT LBS	BASIS OF DESIGN	NOTES
AHU 2	C 2	3600	SEE O/A TABLES	10	4	0.95	208/3/60	12.6	20	1202	113.2	43.4	11.30	1.47	180	TRANE UCCAM08A0	118.2	87.5	95	11.3	208–230/3/60	41	50	416	TRANE TTA12043	1–11
AHU 3	C 3	1800	SEE O/A TABLES	5	4	0.95	208/3/60	12.6	20	1120	68.4	39.1	6.84	0.68	180	TRANE UCCAR06A0	67.3	47.8	95	11.5	208–230/3/60	28	45	240	TRANE TTA07243	1–11
AHU 4	C 4	1500	SEE O/A TABLES	4	4	0.95	208/3/60	11.1	15	816	40.5	32.6	4.04	0.32	180	TRANE UCCAR03A0	53.3	39.3	95	--	208–230/3/60	21	35	261	TRANE 4TTA3060D	1–11
AHU 5	C 5	2800	SEE O/A TABLES	7.5	4	0.95	208/3/60	12.6	20	1126	85.8	60.8	8.57	1.04	180	TRANE UCCAR06A0	99.9	73.1	95	11.3	208–230/3/60	41	50	416	TRANE TTA12043	1–11
AHU 6	C 6	3200	SEE O/A TABLES	8	8	0.95	280/3/60	21.8	35	1240	106.7	69.4	10.65	1.32	180	TRANE UCCAR08A0	115.2	82.5	95	11.3	208–230/3/60	41	50	416	TRANE TTA12043	1–11

NOTES:
1. INDOOR AHU AND CONDENSING UNIT SHALL BE CERTIFIED FOR USE WITH EACH OTHER.
2. INDOOR AHU: CONDENSATE DRAIN TRAP KIT. ALSO SEE NOTE 8.
3. INDOOR AND OUTDOOR UNITS SHALL BE PROVIDED WITH UNIT DISCONNECT SWITCH.
4. 0–100% MODULATING DAMPERS IN MIXING BOX WITH 2" MERV 8 FILTERS, SPARE SET TO OWNER.
5. PROVIDE EVAPORATOR DEFROST CONTROL WITH TXV FOR LOW AMBIENT COOLING DOWN TO 30F.
6. PROVIDE MODULATING HOT GAS REHEAT COIL FOR DEHUMIDIFICATION.
7. PROVIDE FACTORY MOUNTED PROGRAMMED UC600DDC CONTROLLER W/ ASSOCIATED SENSORS AND DEVICES TO ACHIEVE SEQUENCE OF OPERATION.
8. PROVIDE AUTOMATIC CONTROLS TO SHUT DOWN UNIT IN CASE OF OVERFLOW INTO SECONDARY CONDENSATE PAN. UPON SENSING IMPROPER CONDITIONS, WATER LEVEL DETECTOR SHALL STOP THE FAN AND DE–ENERGIZE THE COOLING CYCLE. PROVIDE REMOTE INDICATOR FOR WATER LEVEL DETECTOR ON CEILING OR WALL NEAR UNIT LOCATION.
9. PROVIDE DIRECT DRIVE PLENUM FAN WITH VFD/ECM FAN. PROVIDE RETURN AIR SMOKE DETECTOR.
10. AIR HANDLER SHALL HAVE 2" DOUBLE WALL CONSTRUCTION, R13 INSULATION, & 6" BASE RAILS.

ELECTRIC HEATER SCHEDULE

MARK	AREA / SERVICE	CFM	TYPE	ELECTRICAL DATA				MANUFACTURER	NOTES
				KW	VOLT	PH	AMPS		
EH 1	ENTRY	100	WALL MOUNTED	2	208/230	1	8.3	MARKEL F350T2DWB	1,2
EH 2	STAIRS	250	CABINET MOUNTED	5	208/230	1	25/22	MARKEL 6333D052(0/3)1	2,3

NOTES:
1. ELECTRICAL CORD SHALL BE CONCEALED W/ CASING.
2. BUILT IN CONTROLLABLE THERMOSTAT
3. DISCONNECT SWITCH, DUST FILTER, & HIGH LOW OPERATION

SPLIT HEAT PUMP SCHEDULE

UNIT DESIGNATION		INDOOR UNIT									OUTDOOR UNIT										
INDOOR	OUTDOOR	TOTAL CFM	O.A. CFM	NOMINAL TONS	ELEC HEAT KW	V/PH/HZ	MCA	MOCP	WEIGHT (LBS)	BASIS OF DESIGN	COOLING MBH	OA DB DEG F	HEATING MBH	OA DB DEG F	SEER AT ARI	V/PH/HZ	MCA	MOCP	WEIGHT LBS	BASIS OF DESIGN	NOTES
AHU 1	C 1	2000	SEE O/A TABLES	5.0	15/20	208–230/1/60	58/51 50/43	60/60 50/45	163.0	TRANE TAM9A0C60V51	57.7	95	54.0	47	15.0	208–230/1/60	32.5	50	300	TRANE 4TWR5060H1	1–6
AHU 7	C 7	1161	N/A	3.0	--	208–230/1/60	3.3	--	86.0	TRANE PEAD–A36AA7	33.0	95	38.0	47	16.8	208–230/1/60	28.0	40	265	TRANE PUZ–HA36NHA5	1–6
AHU 8, AHU 9	C 8, C 9	560	N/A	1.5	--	208–230/1/60	1.7	--	62.0	TRANE PEAD–A18AA7	18.0	95	19.0	47	19.9	208–230/1/60	11.0	30	100	TRANE PUZ–A18NKA7	1–6

1. PROVIDE TRANE OR APPROVED EQUAL SPLIT DUCTLESS UNIT W/ REFRIGERANT LINES, INVERTER DRIVEN COMPRESSOR. INTERLOCK SYSTEM TO A REMOTE WALL THERMOSTAT.
2. EACH UNIT SHALL HAVE INTEGRAL CONDENSATE PUMP. PIPE CONDENSATE TO EXTERIOR GRADE W/ SCREENED OUTLET.
3. INDOOR AND OUTDOOR UNITS SHALL BE PROVIDED WITH UNIT DISCONNECT SWITCH.
4. INDOOR AHU AND CONDENSING UNIT SHALL BE CERTIFIED FOR USE WITH EACH OTHER.
5. SYSTEM SHALL HAVE LOW AMBIENT CONTROLS.
6. COOLING BTUH RATING AT 95 F & HEATING BTUH RATING AT 47°F.
7. UNITS WILL BE CONNECTED TO THE BAS WITH BACNET THERMOSTAT.

HOT WATER BOILER SCHEDULE

MARK	AREA / SERVICE	IBR EFF.	OPERATING TEMPERATURE	GAS INPUT	GAS OUTPUT	EFF. %	VENT INT/EXH	ELECTRICAL DATA			BASIS OF DESIGN	NOTES
								VOLT	PH	AMPS		
B 1, B 2, B 3	AHU/VAV HOT WATER COILS	94.0%	140F – 180F	600,000	564,000	94.0	4"/4"	120	1	2.7	LOCHINVAR KBN601	1–9

NOTES:
1. PROVIDE NATURAL GAS PIPING FROM EXISTING GAS LINE TO NEW BOILERS. COORDINATE WITH LOCAL GAS SUPPLIER.
2. PROVIDE ALL BOILER CONTROLS, PIPING, THERMAL EXPANSION TANK (AMTROL AX–80 OR EQUAL), AND SAFETY DEVICES IN ACCORDANCE WITH ASME, MANUFACTURER, AND CODE REQUIREMENTS, WATER TRIM AND RELIEF VALVE (50 PSI), OUTSIDE TEMPERATURE SENSOR. BOILER AND BOILER PUMP SHALL ENERGIZE WHEN OUTSIDE TEMPERATURE READS 40 F OR LESS.
3. PROVIDE AND INSTALL COMBUSTION AIR AND EXHAUST PIPING PER MANUFACTURER WITH CONDENSATE PUMP AND PIPING TO DRAIN.
4. INTERLOCK BURNER CIRCUIT WITH NEW CENTRAL CONTROL PANEL, HOT WATER FLOW SWITCHES, AND SAFETY CONTROLS,
5. PROVIDE ALL HOT WATER PIPING AND INSULATION AS SHOWN.
6. PROVIDE NEW BOILER CONTROLS, CIRCULATOR PUMPS, AND MANIFOLDING PER NEW BUILDING SYSTEM CONTROLS OR EQUAL.
7. ALL WORK SHALL COMPLY WITH INTERNATIONAL MECHANICAL AND PLUMBING CODES, LOCAL CODES, AND PERMITS. CONTRACTOR SHALL OBTAIN AND PAY FOR ALL PERMITS.
8. PROVIDE A RELAY AND INTERLOCK TO ENERGIZE SECONDARY PUMP IF PRIMARY PUMP FAILS.
9. DISCONNECT EXISTING BOILERS FROM ELECTRICAL BRANCH CIRCUIT WIRING AND REVISE EXISTING WIRING AS NEEDED TO MAKE CONNECTION TO REPLACEMENT BOILER.

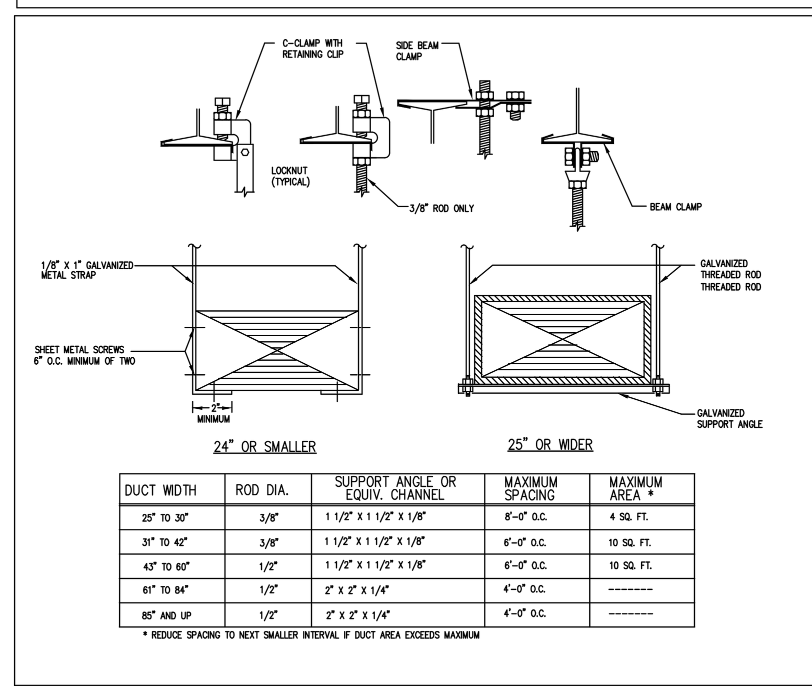

7 DUCT SUPPORT DETAIL
NOT TO SCALE

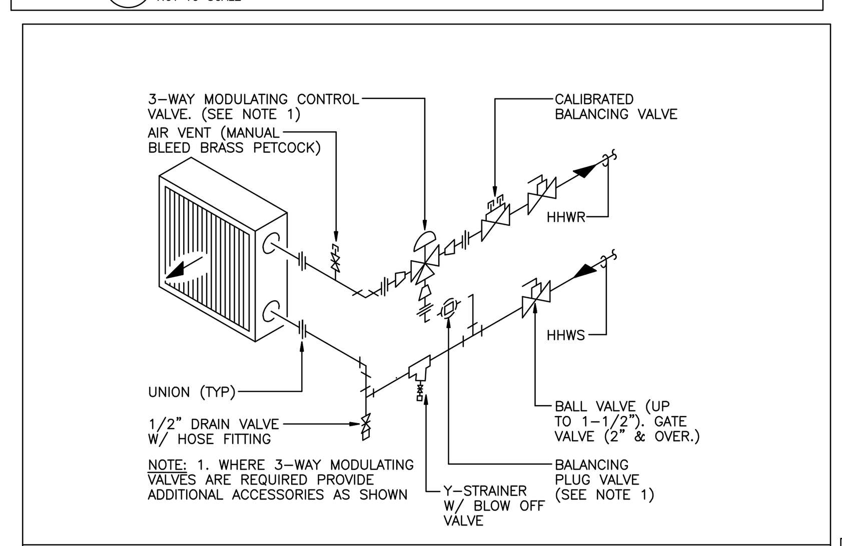

8 HOT WATER HEATING COIL DETAIL
NOT TO SCALE

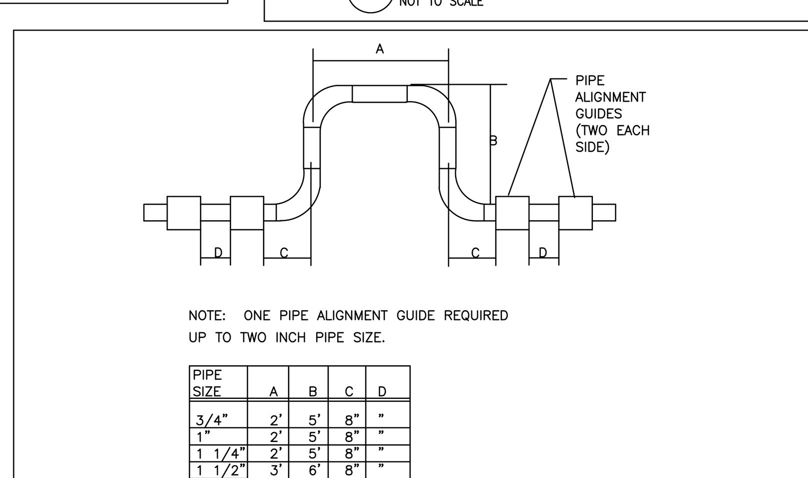

9 EXPANSION LOOP DETAIL
NOT TO SCALE

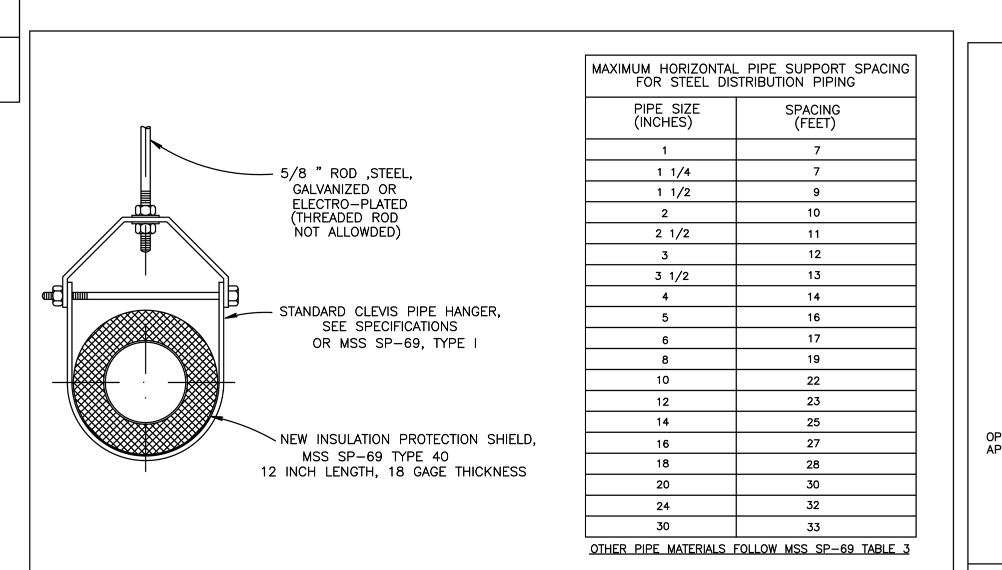

10 CEILING HUNG HANGER FOR INS. PIPE
NOT TO SCALE

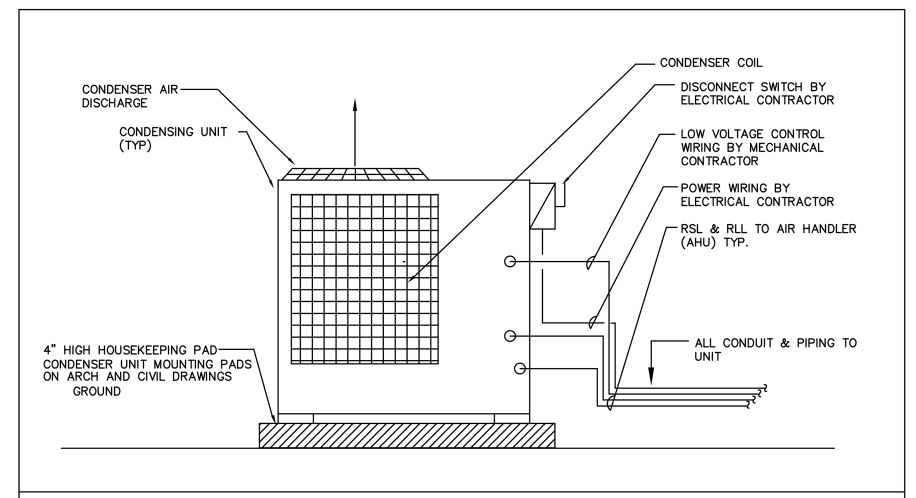

11 CONDENSOR INSTALLATION DETAIL
NOT TO SCALE

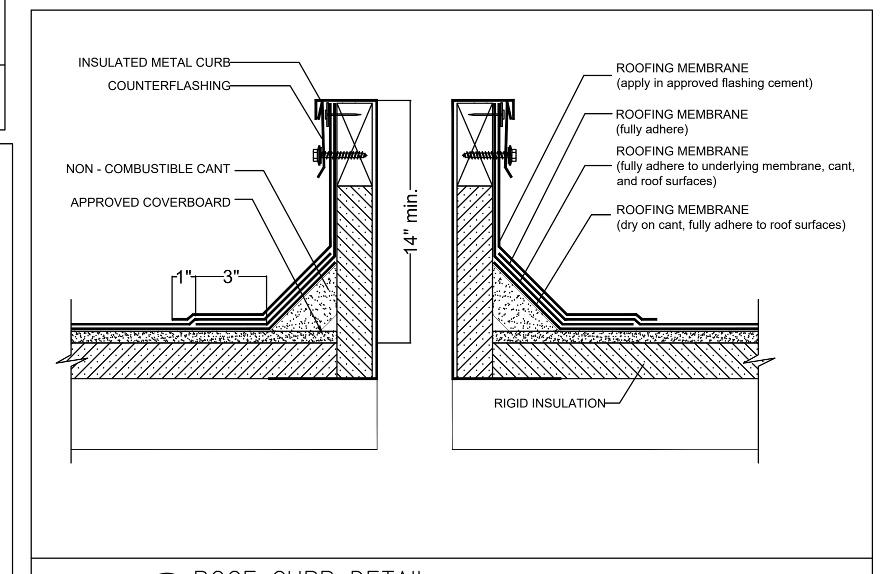

12 ROOF CURB DETAIL
NOT TO SCALE

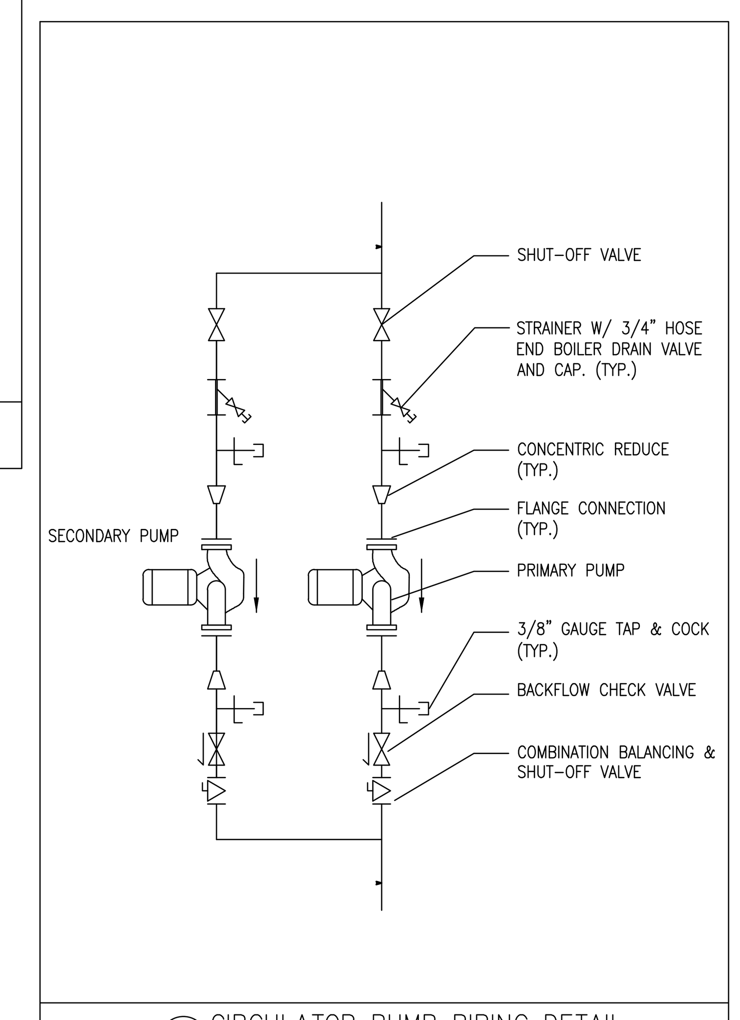

14 CIRCULATOR PUMP PIPING DETAIL
NOT TO SCALE

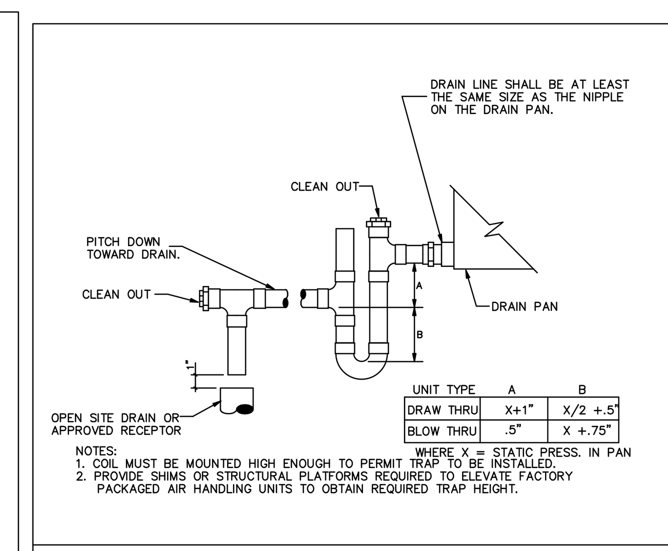

13 AHU DRAIN TRAP DETAIL
NOT TO SCALE

HANDLEY LIBRARY
100 WEST PICCADILLY STREET
WINCHESTER, VA 22601

PAINTER-LEWIS P.L.C.
817 CEDAR CREEK GRADE
SUITE 120
WINCHESTER, VA. 22601
t: (540) 662-5792
f: (540) 662-5793
office@painterlewis.com

COMFORT DESIGN, INC.
620 PENNSYLVANIA AVENUE
WINCHESTER, VA 22601
t: (540) 665-2846
f: (540) 665-0038

COMMONWEALTH OF VIRGINIA
JOSHUA L. CATLETT
No. 042501
03/26/19
PROFESSIONAL ENGINEER

SCALE: AS NOTED

DATE: 3/26/2019
PERMIT DOCUMENTS

REVISIONS: BASED ON

1	---	

DESCRIPTION:
PERMIT/CONSTRUCT. DOCUMENTS

SHEET:
M1.1

COPYRIGHT: AUG. 26, 2016

AHU-2,3,4,5,6

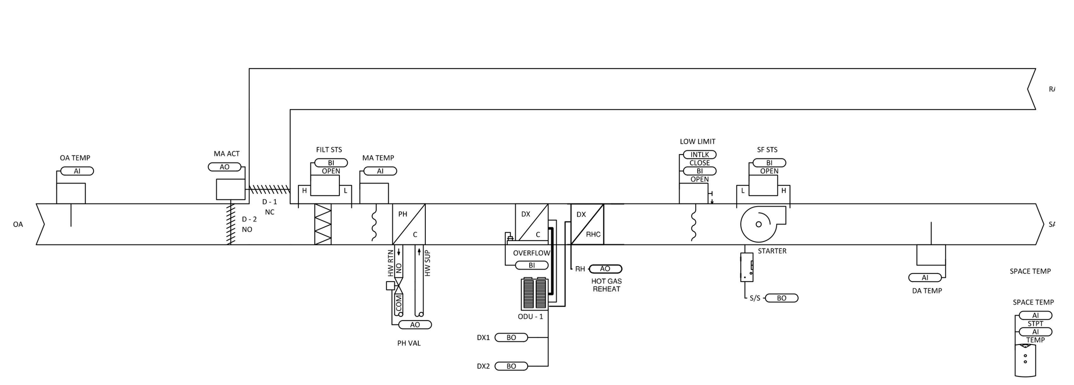

CV AIR HANDLER, DX COOLING, HOT WATER HEATING, DEHUMIDIFICATION HOT GAS REHEAT, MIXING BOX DAMPERS

RTU-1,2

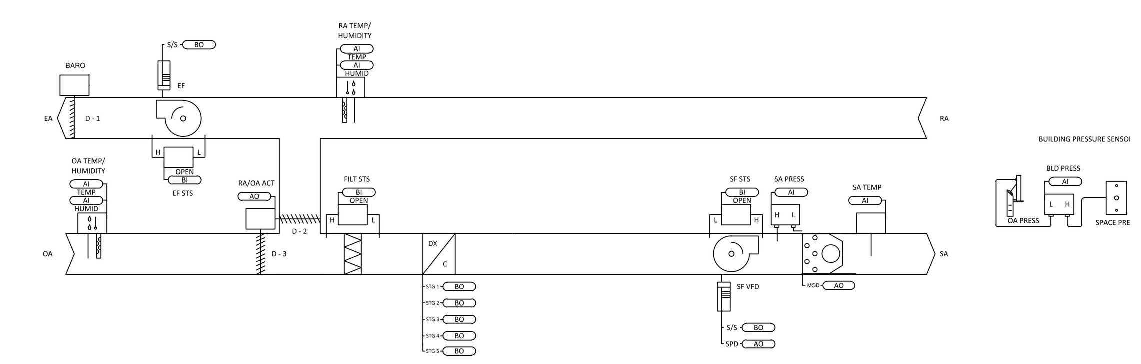

VAV ROOFTOP, DX COOLING,NATURAL GASHEATING, COMPARATIVE ENTHALPY ECONOMIZER, DEMAND CONTROLLED VENTILATION & STATITRAC POWER EXHAUST BUILDING PRESSURE CONTROL

RTU-3

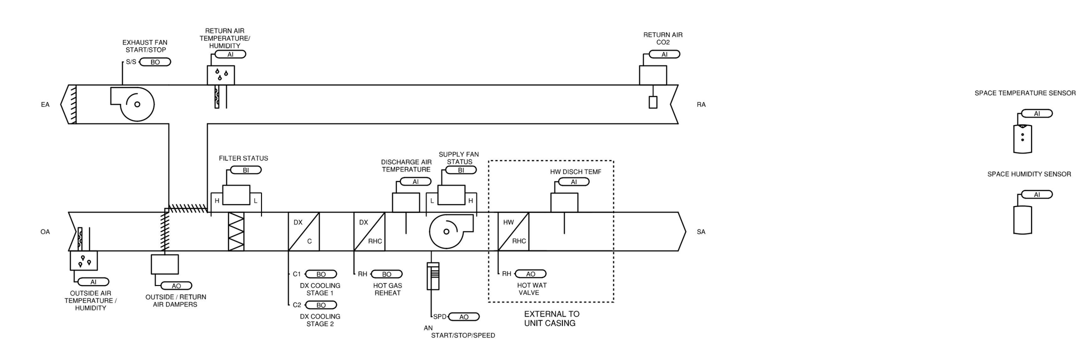

SZVAV ROOFTOP, DX COOLING, HOT WATER HEATING, DEHUMIDIFICATION HOT GAS REHEAT, COMPARATIVE ENTHALPY ECONOMIZER, DEMAND CONTROLLED VENTILATION & POWER EXHAUST

SYSTEM POINTS LIST

CONTROLLER: UC600 UCCA	POINT TYPE								ALARMS							
SYSTEM POINT DESCRIPTION: *AHU/CU-2,3,4,5,6*	GRAPHIC	HARDWARE INPUT	HARDWARE OUTPUT	SOFTWARE POINT	HARDWIRE INTERLOCK	WIRELESS	NETWORK	DEFAULT VALUE	HIGH ANALOG LIMIT	LOW ANALOG LIMIT	BINARY	LATCH DIAGNOSTIC	SENSOR FAIL	COMMUNICATION FAIL	DIAGNOSTICS	NOTES:
DISCHARGE AIR TEMPERATURE LOCAL	X	AI														
MIXED AIR TEMPERATURE LOCAL	X	AI														
OUTDOOR AIR TEMPERATURE LOCAL	X	AI														
SPACE TEMPERATURE LOCAL SETPOINT	X	AI														
SPACE TEMPERATURE LOCAL TEMPERATURE	X	AI														
CONDENSATE OVERFLOW INPUT	X	BI									X					
FILTER STATUS OPEN	X	BI									X					
LOW LIMIT TEMPERATURE CUTOUT OPEN	X	BI			X						X					
SUPPLY FAN STATUS OPEN	X	BI														
HEATING OUTPUT COMMAND	X		AO													
MIXED AIR DAMPER	X		AO													
COMPRESSOR 1 COMMAND	X		BO													
COMPRESSOR 2 COMMAND	X		BO													
HOT GAS REHEAT	X		AO													
SUPPLY FAN START STOP COMMAND	X		BO													
OCCUPIED COOLING SETPOINT				X				74.0 deg. F								
OCCUPIED HEATING SETPOINT				X				71.0 deg. F								
OCCUPIED OFFSET				X				1.5 deg. F								
OCCUPIED STANDBY OFFSET				X				3.0 deg. F								
UNOCCUPIED COOLING SETPOINT				X				80.0 deg. F								
UNOCCUPIED HEATING SETPOINT				X				65.0 deg. F								
SPACE TEMPERATURE SETPOINT BAS				X				72.5 deg. F								
MIXED AIR TEMPERATURE LOW LIMIT SETPOINT				X				40.0 deg. F								
CONTROLLER SPARE HARDWARE POINTS																
ANALOG INPUT(S)		1														
UNIVERSAL INPUT(S)		1														
ANALOG OUTPUT(S)			3													
BINARY OUTPUT(S)			1													
GENERAL NOTES																

SYSTEM POINTS LIST

CONTROLLER: Voyager III RTU	POINT TYPE								ALARMS							
SYSTEM POINT DESCRIPTION: *RTU-1,2*	GRAPHIC	HARDWARE INPUT	HARDWARE OUTPUT	SOFTWARE POINT	HARDWIRE INTERLOCK	WIRELESS	NETWORK	DEFAULT VALUE	HIGH ANALOG LIMIT	LOW ANALOG LIMIT	BINARY	LATCH DIAGNOSTIC	SENSOR FAIL	COMMUNICATION FAIL	DIAGNOSTICS	NOTES:
BUILDING STATIC PRESSURE LOCAL	X	AI							X	X			X			
DISCHARGE AIR TEMPERATURE LOCAL	X	AI							X	X			X			
OUTSIDE AIR TEMPERATURE/HUMIDITY LOCAL HUMIDITY	X	AI											X			
IDE AIR TEMPERATURE/HUMIDITY LOCAL TEMPERATURE	X	AI														
RETURN AIR TEMPERATURE/HUMIDITY LOCAL HUMIDITY	X	AI											X			
IRN AIR TEMPERATURE/HUMIDITY LOCAL TEMPERATURE	X	AI														
SUPPLY DUCT STATIC PRESSURE LOCAL	X	AI							X	X			X			
EXHAUST FAN STATUS LOCAL OPEN	X	BI														
PRIMARY FILTER STATUS LOCAL OPEN	X	BI									X					
SUPPLY FAN STATUS LOCAL OPEN	X	BI									X	X				
MIXED AIR DAMPER	X		AO													
GAS HEATING	X		AO													
SUPPLY FAN SPEED	X		AO													
COOLING OUTPUT 1	X		BO													
COOLING OUTPUT 2	X		BO													
COOLING OUTPUT 3	X		BO													
COOLING OUTPUT 4	X		BO													
COOLING OUTPUT 5	X		BO													
EXHAUST FAN START/STOP	X		BO													
SUPPLY FAN START/STOP	X		BO													
OCCUPANCY				X												
OCCUPIED COOLING SETPOINT				X				74.0 deg. F								
OCCUPIED HEATING SETPOINT				X				70.0 deg. F								
OCCUPIED STANDBY COOLING SETPOINT				X				80.0 deg. F								
OCCUPIED STANDBY HEATING SETPOINT				X				65.0 deg. F								
UNOCCUPIED COOLING SETPOINT				X				85.0 deg. F								
UNOCCUPIED HEATING SETPOINT				X				60.0 deg. F								
OCCUPIED BYPASS TIMER				X				2.0 HRS								
ECONOMIZER MINIMUM POSITION				X												
HEATING MODE SETPOINT				X												
COOLING MODE SETPOINT				X												
SUPPLY AIR PRESSURE SETPOINT				X												
SETPOINT OFFSET				X												
COMPRESSOR ENABLE				X				AUTO								
HEAT / COOL MODE				X				COOL								
FAN MODE COMMAND				X				ON								
APPLICATION MODE				X				AUTO								
OUTSIDE AIR DAMPER MINIMUM POSITION				X				10%								
EFFECTIVE OCCUPANCY	X			X												
EFFECTIVE HEAT / COOL MODE	X			X												
EFFECTIVE SPACE TEMPERATURE	X			X												
EFFECTIVE SPACE SETPOINT				X												
LOCAL SETPOINT				X												
HEAT OUTPUT	X			X												
COOL OUTPUT	X			X												
ALARM	X			X												
SUPPLY AIR HEATING/COOLING SETPOINT				X												
MAINTENANCE REQUIRED				X				600 HRS								
BAS COMMUNICATION STATE	X			X												
GENERAL NOTES																

SYSTEM POINT LIST

CONTROLLER: RELIATEL / BCI-R		POINT TYPE					ALARMS							
SYSTEM POINT DESCRIPTION: ***RTU-3 PRECEDENT** SZVAV, DX Cooling, Hot Water Heating, Dehumidification, Comparative Enthalpy Economizer, CO2 Demand Control Ventilation & Power Exhaust*		GRAPHIC	HARDWARE INPUT	HARDWARE OUTPUT	SOFTWARE POINT	DEFAULT VALUE	HIGH ANALOG LIMIT	LOW ANALOG LIMIT	BINARY	LATCH DIAGNOSTIC	SENSOR FAIL	COMMUNICATION FAIL	DIAGNOSTICS	NOTES:
SPACE SENSOR	SPACE TEMPERATURE (THERM)		AI		X		X	X			X		DIAGNOSTIC ALARM STATUS	NOTE 2, 3
	SPACE TEMPERATURE SETPOINT		AI		X	72.5 F					X		DIAGNOSTIC ALARM STATUS	NOTE 1, 2, 3
	ON/CANCEL				X									NOTE 1, 2
	OUTDOOR AIR TEMPERATURE		AI		X						X		DIAGNOSTIC ALARM STATUS	NOTE 2, 3
	OUTDOOR AIR RELATIVE HUMIDITY		AI		X						X		DIAGNOSTIC ALARM STATUS	NOTE 2, 3
	RETURN AIR TEMPERATURE		AI		X						X		DIAGNOSTIC ALARM STATUS	NOTE 2
	RETURN AIR RELATIVE HUMIDITY		AI								X		DIAGNOSTIC ALARM STATUS	
	SPACE HUMIDITY		AI		X		X	X			X		DIAGNOSTIC ALARM STATUS	NOTE 2, 3
	SPACE RELATIVE HUMIDITY SETPOINT		AI		X	50.00%					X		DIAGNOSTIC ALARM STATUS	NOTE 2
	RETURN AIR CO2		AI		X		X	X			X		DIAGNOSTIC ALARM STATUS	NOTE 2, 3
	RETURN AIR C02 LIMIT		AI		X	900 PPM							DIAGNOSTIC ALARM STATUS	NOTE 2
	SUPPLY AIR TEMPERATURE	X	AI		X		X	X			X		DIAGNOSTIC ALARM STATUS	NOTE 3
	HW COIL DISCHARGE TEMPERATURE	X	AI		X		X	X			X		DIAGNOSTIC ALARM STATUS	NOTE 3
	ECONOMIZER DAMPER POSITION	X	AI		X									NOTE 3
	EXHAUST FAN ENABLE SETPOINT		AI											
	DIRTY FILTER		BI		X								DIAGNOSTIC ALARM STATUS	
	SUPPLY FAN STATUS		BI							X			DIAGNOSTIC ALARM STATUS	
	HIGH PRESSURE COMPRESSOR PROTECTION		BI							X			DIAGNOSTIC ALARM STATUS	
	LOW PRESSURE COMPRESSOR PROTECTION		BI							X			DIAGNOSTIC ALARM STATUS	
	EMERGENCY STOP		BI										DIAGNOSTIC ALARM STATUS	
	ECONOMIZER DAMPER OUTPUT			AO	X								DIAGNOSTIC ALARM STATUS	NOTE 3
	SUPPLY FAN START/STOP/SPEED			AO										
	EXHAUST FAN START/STOP			BO										
	COMPRESSOR 1 START/STOP			BO										
	COMPRESSOR 2 START/STOP			BO										
	CONDENSER FAN A START/STOP			BO										
	CONDENSER FAN B START/STOP			BO										
	HOT WATER VALVE	X		AO	X									
	OCCUPANCY				X									NOTE 2
	OCCUPIED COOL SETPOINT				X	74.0 F								NOTE 2
	OCCUPIED HEAT SETPOINT				X	71.0 F								NOTE 2
	OCCUPIED STANDBY COOL SETPOINT				X	78.0 F								NOTE 2
	OCCUPIED STANDBY HEAT SETPOINT				X	67.0 F								NOTE 2
	UNOCCUPIED COOL SETPOINT				X	85.0 F								NOTE 2
	UNOCCUPIED HEAT SETPOINT				X	60.0 F								NOTE 2
	SETPOINT OFFSET				X									NOTE 2
	OCCUPIED BYPASS TIMER				X	120 MIN								NOTE 2
	COMPRESSOR ENABLE				X	AUTO								NOTE 2
	ECONOMIZER ENABLE				X	AUTO								NOTE 2
	HEAT / COOL MODE				X	COOL								NOTE 2
	FAN MODE COMMAND				X	AUTO								NOTE 2
	APPLICATION MODE				X	AUTO								NOTE 2
	OUTSIDE AIR DAMPER MINIMUM POSITION				X	10.00%								NOTE 2
	EFFECTIVE OCCUPANCY	X			X									NOTE 3
	EFFECTIVE HEAT / COOL MODE	X			X									NOTE 3
	EFFECTIVE SPACE TEMPERATURE	X			X									NOTE 3
	EFFECTIVE SPACE SETPOINT	X			X									NOTE 3
	LOCAL SETPOINT				X									NOTE 3
	HEAT OUTPUT	X			X									NOTE 3
	COOL OUTPUT	X			X									NOTE 3
	ALARM	X			X									NOTE 3
	COMMUNICATION STATE				X							X		

GENERAL NOTES:
1. OPTIONAL FEATURE
2. SNVT NETWORK INPUT VARIABLE
3. SNVT NETWORK OUTPUT VARIABLE

Sequence of Operations
AHU/CU-2,3,4,5,6

Building Automation System Interface: The Building Automation System (BAS) shall send the controller Occupied Bypass, Morning Warm-up/Pre-Cool, Occupied/Unoccupied and Heat/Cool modes. If a BAS is not present, or communication is lost with the BAS the controller shall operate using default modes and setpoints

Occupied:
During occupied periods, the supply fan shall run continuously. The DX cooling shall stage and the hot water valve shall modulate to maintain the discharge air temperature setpoint. The discharge air temperature setpoint shall be dynamically reset based on the deviation of actual space temperature from the active space temperature setpoint. If the discharge air temperature sensor fails the DX cooling shall stage and the hot water valve shall modulate to maintain the active space temperature setpoint and an alarm shall be annunciated at the BAS. If the discharge air temperature sensor and the space temperature sensor fail the DX cooling shall be disabled, the hot water valve shall close and an alarm shall be annunciated at the BAS.

Unoccupied:
When the space temperature is below the unoccupied heating setpoint of 60.0 deg. F (adj.) the supply fan shall start, the mixed air dampers shall remain closed to outdoor air and the hot water valve shall open. When the space temperature rises above the unoccupied heating setpoint of 60.0 deg. F (adj.) plus the unoccupied differential of 4.0 deg. F (adj.) the supply fan shall stop and the hot water valve shall close.

When the space temperature is above the unoccupied cooling setpoint of 85.0 deg. F (adj.) the supply fan shall start, the mixed air dampers shall remain closed and the DX cooling shall be enabled. When the space temperature falls below the unoccupied cooling setpoint of 85.0 deg. F (adj.) minus the unoccupied differential of 4.0 deg. F (adj.) the supply fan shall stop, the DX cooling shall be disabled and the mixed air dampers shall close.

Optimal Start:
The BAS shall monitor the scheduled occupied time, occupied space setpoints and space temperature to calculate when the optimal start occurs.

Morning Warm-Up Mode:
During optimal start, if the space temperature is below the occupied heating setpoint a morning warm-up mode shall be activated. When morning warm-up is initiated the unit shall enable the heating and fan(s). The dampers shall remain closed to outdoor. When the space temperature reaches the occupied heating setpoint (adj.), the unit shall transition to the occupied mode.

Pre-Cool Mode:
During optimal start, if the space temperature is above the occupied cooling setpoint, pre-cool mode shall be activated. When pre-cool is initiated the unit shall enable the fan and cooling or economizer. The mixed air dampers shall remain closed, unless economizing. When the space temperature reaches occupied cooling setpoint (adj.), the unit shall transition to the occupied mode.

Optimal Stop:
The BAS shall monitor the scheduled unoccupied time, occupied setpoints and space temperature to calculate when the optimal stop occurs. When the optimal stop mode is active the unit controller shall maintain the space temperature to the space temperature offset setpoint. Mixed air dampers shall remain enabled to provide minimum ventilation.

Occupied Bypass:
The BAS shall monitor the status of the "on" and "cancel" buttons of the space temperature sensor. When an occupied bypass request is received from a space sensor, the unit shall transition from its current occupancy mode to occupied bypass mode and the unit shall maintain the space temperature to the occupied setpoints (adj.).

Heat/Cool Mode:
When the space temperature rises above the occupied cooling setpoint the mode shall transition to cooling. When the space temperature falls below the occupied heating setpoint the mode shall transition to heating. When the space temperature is above the occupied cooling setpoint or below the occupied heating setpoint the mode shall remain in its last state. If the space temperature sensor fails the mode shall remain in its last state and an alarm shall be annunciated at the BAS. If the local and communicated setpoints fail the controller shall disable the supply fan and an alarm shall be annunciated at the BAS.

Dehumidification:
Factory installed hot gas reheat shall allow application of dehumidification. Dehumidification shall be allowed only when the outside air temperature is above 40.0 deg. F and below 100.0 deg. F. The economizer outside air damper shall drive to minimum position during dehumidification.

Single compressor units:
On a call for dehumidification, the reheat valve shall modulate and the compressor shall enable. When the humidity control setpoint is satisfied, the valve shall be de-energized and the compressor shall be disabled. If there is a call for cooling from the space temperature controller, while in reheat, the reheat valve shall be de-energized and the compressor continues to run.

Dual compressor units:
On a call for dehumidification, the reheat valve shall modulate and both compressors shall enable. When the humidity control setpoint is satisfied, the valve shall be de-energized and both compressors shall be disabled. If there is a call for 1st stage cooling while in the dehumidification mode, no action shall take place. If there is a call for 2nd stage cooling, the reheat valve shall be de-energized, and the unit shall revert to the cooling mode. If 2nd stage cooling is satisfied and there is still a call for dehumidification, the reheat valve shall once again be modulated

Supply Fan:
The fan shall be off in the unoccupied mode. The fan shall be on if the control is heating or cooling in the unoccupied mode. When the controller is in the occupied mode, the supply fan shall operate continuously at rated speed. If the supply fan fails the fan shall be commanded off and an alarm shall be annunciated at the BAS. A manual reset shall be required to restart the fan.

Mixed Air Low Limit:
The initial damper opening rate shall be limited to 2% per minute (adj.) until the damper has reached its minimum ventilation position. The mixed air damper shall modulate to a position less than the minimum damper position if the mixed air temperature drops below 50.0 deg. F (adj.). If the mixed air temperature sensor fails an alarm shall be annunciated at the BAS and the outdoor air damper shall return to the minimum position.

Freeze Protection:
A hardwired, low limit temperature switch shall be electrically interlocked with the motor starter. If the low limit temperature switch is tripped 38.0 deg. F (adj.), the outdoor air damper shall close, all valves shall open to 100% (adjust per climate), all stages of DX cooling shall be disabled and an alarm shall be annunciated at the BAS. A manual reset of the low limit temperature switch shall be required to restart the fan.

Filter Status:
A differential pressure switch shall monitor the differential pressure across the filter when the fan is running. If the switch closes during normal operation a dirty filter alarm shall be annunciated at the BAS.

Sequence of Operations
RTU-1,2

Building Automation System Interface:
The Building Automation System (BAS) shall send the controller Occupied Bypass, Morning Warm-up / Pre-Cool, Occupied / Unoccupied and Heat / Cool modes. If a BAS is not present, or communication is lost with the BAS the controller shall operate using default modes and setpoints.

Occupied Mode:
During occupied periods, the supply fan shall run continuously and the outside air damper shall open to maintain minimum ventilation requirements. The unit controller shall control the supply fan speed to maintain the current duct static pressure setpoint (adj.).The DX cooling shall stage and gas heat shall modulate to maintain the current discharge air temperature setpoint. If economizing is enabled the outside air damper shall modulate to maintain the current discharge air temperature setpoint.

Unoccupied Mode:
When the space temperature is below the unoccupied heating setpoint of 60.0 deg. F (adj.) the supply fan shall start, the outside air damper shall remain closed and the gas heat shall be enabled. When the space temperature rises above the unoccupied heating setpoint of 60.0 deg. F (adj.) plus the unoccupied differential of 4.0 deg. F (adj.) the supply fan shall stop and the gas heat shall be disabled.
When the space temperature is above the unoccupied cooling setpoint of 85.0 deg. F (adj.) the supply fan shall start, the outside air damper shall open if economizing is enabled and remain closed if economizing is disabled and the DX cooling shall be enabled. When the space temperature falls below the unoccupied cooling setpoint of 85.0 deg. F (adj.) minus the unoccupied differential of 4.0 deg. F (adj.) the supply fan shall stop, the DX cooling shall be disabled and the outside air damper shall close.

Optimal Start:
The BAS shall monitor the scheduled occupied time, occupied space setpoints and space temperature to calculate when the optimal start occurs.

Morning Warm-Up Mode:
During optimal start, if the average space temperature is below the occupied heating setpoint a morning warm-up mode shall be activated. When morning warm-up is initiated the unit shall enable the heating and supply fan. The outside air damper shall remain closed. When the average space temperature reaches the occupied heating setpoint (adj.), the unit shall transition to the occupied mode.

Pre-Cool Mode:
During optimal start, if the average space temperature is above the occupied cooling setpoint, pre-cool mode shall be activated. When pre-cool is initiated the unit shall enable the fan and cooling or economizer. The outside air damper shall remain closed, unless economizing. When the average space temperature reaches occupied cooling setpoint (adj.), the unit shall transition to the occupied mode.

Optimal Stop:
The BAS shall monitor the scheduled unoccupied time, occupied setpoints and space temperature to calculate when the optimal stop occurs. When the optimal stop mode is active the unit controller shall maintain the space temperature to the space temperature offset setpoint.

Occupied Bypass:
The BAS shall monitor the status of the "on" and "cancel" buttons of the space temperature sensors. When an occupied bypass request is received from a space sensor, the unit shall transition from its current occupancy mode to occupied bypass mode and the unit shall maintain the space temperature to the occupied setpoints (adj.).

Cooling Mode:
The unit controller shall use the discharge air temperature sensor and discharge air temperature cooling setpoint to determine when to initiate requests for cooling. Discharge air setpoint shall be maintained by modulating the economizer or staging the DX cooling as required to maintain the discharge air setpoint.

Heating Mode:
During Unoccupied Heating or Morning Warm-Up Mode, the unit heat request will be communicated to the system VAVs prior to commencing heating operation to allow VAV units to open. The VFD shall be commanded to 100% and the heat will be modulated to satisfy the zone temperature setpoint.

Supply Air Temperature Reset Control:
The discharge air temperature setpoint, 55.0 deg. F – 65.0 deg. F (adj.) shall be reset based on either the outside air temperature or space average temperature (adj.). The minimum discharge air setpoint shall be set at 55.0 deg. F (adj.). The discharge temperature sensor shall prevent the discharge air temperature from falling below the minimum discharge air setpoint (adj.). If the discharge air temperature continues to fall, the discharge temperature sensor shall act as a low discharge temperature limit, a low temperature alarm shall be annunciated, and the unit shall shut down. If the discharge temperature rises above the high limit setpoint the sensor shall act as a high discharge temperature limit and shall keep the unit running, a high temperature alarm shall be annunciated.

Outdoor Air Temperature Reset:
The discharge air temperature setpoint shall be adjusted based on the outside air temperature and the cooling load of the building.

Space Temperature Reset:
The discharge air temperature setpoint shall be adjusted based on the temperature of the critical space(s).

Supply Air Temperature Reset Control:
The supply air temperature setpoint shall be reset to the optimal setpoint communicated by the BAS. The BAS shall reset the supply air temperature setpoint based on the current outside air temperature, but shall override this reset function and return the supply air temperature setpoint to 55.0 deg. F (adj.) if more than two (adj.) zones begin to overheat. Also, the BAS shall override this reset function whenever outdoor dew point is higher than 60.0 deg. F (adj.) or indoor humidity is higher than 60% RH (adj.). If the supply air temperature drops below the minimum limit, a low temperature alarm shall be annunciated and the unit shall shut down. If the supply air temperature rises above the maximum limit, a high temperature alarm shall be annunciated.

Economizer:
The supply air sensor shall measure the dry bulb temperature of the air leaving the evaporator coil while economizing. When economizing is enabled and the unit is operating in the cooling mode, the economizer damper shall be modulated between its minimum position and 100% to maintain the discharge air temperature setpoint. The economizer damper shall modulate toward minimum position in the event the mixed air temperature falls below the low limit temperature setting. Compressors shall be delayed from operating until the economizer has opened to 100%.

Comparative Enthalpy:
Outside air (OA) enthalpy shall be compared with Return air (RA) enthalpy point. The economizer shall enable when OA enthalpy is less than RA enthalpy – 3.0 BTU/LB. The economizer shall disable when OA enthalpy is greater than RA enthalpy.

Supply Fan:
The supply fan shall be enabled while in the occupied mode and cycled on during the unoccupied mode. A differential pressure switch shall monitor the differential pressure across the fan. If the switch does not open within 40 seconds after a request for fan operation a fan failure alarm shall be annunciated at the BAS, the unit shall stop, requiring a manual reset.

Supply Duct Static Pressure Control:
During the occupied mode the unit controller shall modulate the output to the VFD as required to maintain the duct static pressure setpoint of 1.5 inches of W.C. (adj.). If the duct static pressure falls below 1.3 inches of W.C. (adj.) the unit controller shall increase the output to the VFD to maintain setpoint. If the duct static pressure rises above 1.7 inches of W.C. (adj.) the unit controller shall decrease the output to the VFD to maintain setpoint. Upon a call for heating or cooling in the unoccupied mode the unit controller shall modulate the speed of the VFD to 100%.

If for any reason the supply air pressure exceeds the supply air pressure high limit, the supply fan shall shut down. The unit shall be allowed to restart three times after a 15 minute off period. If the overpressurization condition occurs on the fourth restart, the unit shall shut down and a manual reset diagnostic is displayed at the remote panel and/or the BAS system.

Building Pressure Control:
A differential pressure transducer shall actively monitor the difference in pressure between the building (indoors) and outdoors. If the building pressure increases above the differential pressure setpoint, the unit controller shall cycle the exhaust fan to control building pressure to the differential pressure setpoint. If the building pressure decreases below the differential pressure setpoint, the controller shall deactivate the exhaust fan.

Demand Controlled Ventilation:

The RTU will respond to commands from the BAS based on the zone level CO2 readings. When the demand control ventilation (DCV) threshold is reached, the economizer shall start to modulate open to bring in more fresh air to reduce the zone CO2 level. The damper shall modulate open in small increments until the CO2 level is satisfied or the damper reaches the full open position. Once the threshold is satisfied, the damper shall return to normal economizer operation. If the mixed air temperature drops to 40.0 deg. F, the CO2 sensor input is overridden and closes the damper to minimum position. When the mixed air temperature rises to 43.0 deg. F, CO2 or economizer operation is once again restored.

Exhaust Fan Status:
A differential pressure switch shall monitor the differential pressure across the fan. If the switch is detected to be open for 40 consecutive seconds after a request for exhaust fan operation a fan failure alarm shall be annunciated at the BAS and the exhaust fan shall stop. A manual reset shall be required.

Filter Status:
A differential pressure switch shall monitor the differential pressure across the filter when the fan is running. If the switch closes for 2 minutes after a request for fan operation a dirty filter alarm shall be annunciated at the BAS.

Sequence of Operations
RTU-3

Building Automation System Interface:
The Building Automation System (BAS) shall send the controller Occupied Bypass, Pre-Cool, Occupied / Unoccupied and Heat / Cool modes. If a BAS is not present, or communication is lost with the BAS the controller shall operate using default modes and setpoints.

Occupied Mode:
During occupied periods, the supply fan shall run continuously and the outside air damper shall open to maintain minimum ventilation requirements. The DX cooling shall stage to maintain the occupied space temperature setpoint. If economizing is enabled the outside air damper shall modulate to maintain the occupied space temperature setpoint.

Unoccupied Mode:
When the space temperature is below the unoccupied heating setpoint of 60.0 deg. F (adj.) the supply fan shall start, the outside air damper shall remain closed and the hot water heat shall be enabled. When the space temperature rises above the unoccupied heating setpoint of 60.0 deg. F (adj.) plus the unoccupied differential of 4.0 deg. F (adj.) the supply fan shall stop and the hot water heat shall be disabled.
When the space temperature is above the unoccupied cooling setpoint of 85.0 deg. F (adj.) the supply fan shall start, the outside air damper shall open if economizing is enabled and remain closed if economizing is disabled and the DX cooling shall be enabled. When the space temperature falls below the unoccupied cooling setpoint of 85.0 deg. F minus the unoccupied differential of 4.0 deg. F (adj.) the supply fan shall stop, the DX cooling shall be disabled and the outside air damper shall close.

Optimal Start:
The BAS shall monitor the scheduled occupied time, occupied space setpoints and space temperature to calculate when the optimal start occurs.

Morning Warm-Up Mode:
During optimal start, if the average space temperature is below the occupied heating setpoint a morning warm-up mode shall be activated. When morning warm-up is initiated the unit shall enable the heating and supply fan. The outside air damper shall remain closed. When the average space temperature reaches the occupied heating setpoint (adj.), the unit shall transition to the occupied mode.

Pre-Cool Mode:
During optimal start, if the space temperature is above the occupied cooling setpoint, pre-cool mode shall be activated. When pre-cool is initiated the unit shall enable the fan and cooling or economizer. The outside air damper shall remain closed, unless economizing. When the space temperature reaches occupied cooling setpoint (adj.), the unit shall transition to the occupied mode.

Optimal Stop:
The BAS shall monitor the scheduled unoccupied time, occupied setpoints and space temperature to calculate when the optimal stop occurs. When the optimal stop mode is active the unit controller shall maintain the space temperature to the space temperature offset setpoint.

Occupied Bypass:
The BAS shall monitor the status of the "on" and "cancel" buttons of the space temperature sensor. When an occupied bypass request is received from a space sensor, the unit shall transition from its current occupancy mode to occupied bypass mode and the unit shall maintain the space temperature to the occupied setpoints (adj.).

Cooling Mode:
The unit controller shall monitor space temperature and space temperature cooling setpoint to determine when to initiate requests for cooling. When the space temperature rises above the space temperature cooling setpoint, the unit controller shall modulate the economizer or stage the mechanical cooling On or Off as required to maintain the space temperature cooling setpoint. The first compressor shall energize after its minimum 3-minute off time has expired. The supply fan shall modulate above minimum speed to meet zone requirements. If additional cooling capacity is required the second stage of cooling shall be enabled. Once the space temperature falls below the setpoint the compressors shall be deactivated and the fan shall modulate to minimum speed.

Heating Mode:
The unit controller shall monitor space temperature and space temperature cooling setpoint to determine when to initiate requests for heating. When the space temperature falls below the space temperature heating setpoint, the unit controller shall modulate hot water control valve as required to maintain the space temperature heating setpoint. The supply fan shall modulate above minimum speed to meet zone requirements. Once the space temperature rises above the setpoint the hot water control valve shall modulate closed and the fan shall modulate to minimum speed.

Dehumidification:
Factory installed hot gas reheat shall allow application of dehumidification. Dehumidification shall be allowed only when the outside air temperature is above 40.0 deg. F and below 100.0 deg. F. The economizer outside air damper shall drive to minimum position during dehumidification.

Single compressor units:
On a call for dehumidification, the reheat valve shall energize and the compressor shall enable. When the humidity control setpoint is satisfied, the valve shall be de-energized and the compressor shall be disabled. If there is a call for cooling from the space temperature controller, while in reheat, the reheat valve shall be de-energized and the compressor continues to run.

Dual compressor units:
On a call for dehumidification, the reheat valve shall energize and both compressors shall enable. When the humidity control setpoint is satisfied, the valve shall be de-energized and both compressors shall be disabled. If there is a call for 1st stage cooling while in the dehumidification mode, no action shall take place. If there is a call for 2nd stage cooling, the reheat valve shall be de-energized, and the unit shall revert to the cooling mode. If 2nd stage cooling is satisfied and there is still a call for dehumidification, the reheat valve shall once again be energized.

Economizer Control / Comparative Enthalpy:
The supply air sensor shall measure the dry bulb temperature of the air leaving the evaporator coil while economizing. When economizing is enabled and the unit is operating in the cooling mode, the economizer damper shall modulate between its minimum position and 100% to maintain the space temperature setpoint. Minimum position shall be calculated based on supply fan speed. If the mixed air temperature starts to fall below 53.0 deg. F, the economizer starts to close, at 50.0 deg. F, the damper shall be at minimum position. Compressors shall be delayed from operating until the economizer has opened to 100% for 5 minutes.

Comparative Enthalpy:
Outside air (OA) enthalpy is compared with Return air (RA) enthalpy point. The economizer shall be enabled when OA enthalpy is less than RA – 3.0 BTU/LB. The economizer shall be disabled when OA enthalpy is greater than RA enthalpy.

Demand Control Ventilation (DCV) Operation:
When the demand control ventilation (DCV) threshold is reached, the economizer shall start to modulate open to bring in more fresh air to reduce the CO2 level. The damper shall modulate open in small increments, accounting for CO2 levels and supply fan speed, until the CO2 level is satisfied or the damper reaches the full open position. If there is a call for economizer cooling, the outdoor air damper may be opened further to satisfy the cooling request. Once the threshold is satisfied, the damper shall return to minimum position or normal economizer operation. If the mixed air temperature drops to 40.0 deg. F, the CO2 sensor input is overridden and closes the damper to minimum position. When the mixed air temperature rises to 43.0 deg. F, CO2 or economizer operation is once again restored.

Supply Fan Operation:
The supply fan shall be enabled while in the occupied mode and cycled on during the unoccupied mode. The unit controller shall vary the supply fan speed to optimize minimum fan speed in all cooling modes. A differential pressure switch shall monitor the differential pressure across the fan. If the switch does not open within 40 seconds after a request for fan operation a fan failure alarm shall be annunciated, the unit shall stop, requiring a manual reset.

Building Pressure Control:
The power exhaust shall enable when the economizer damper position is equal to or greater than the exhaust fan setpoint.

Filter Status:
A differential pressure switch shall monitor the differential pressure across the filter when the fan is running. If the switch closes for 2 minutes after a request for fan operation a dirty filter alarm shall be annunciated at the BAS.

HANDLEY LIBRARY

100 WEST PICCADILLY STREET
WINCHESTER, VA 22601

PAINTER-LEWIS P.L.C.
817 CEDAR CREEK GRADE
SUITE 120
WINCHESTER, VA. 22601
t: (540) 662-5792
f: (540) 662-5793
office@painterlewis.com

COMFORT DESIGN, INC.
620 PENNSYLVANIA AVENUE
WINCHESTER, VA 22601
t: (540) 665-2846
f: (540) 665-0038

COMMONWEALTH OF VIRGINIA
JOSHUA L. CATLETT
No. 042501
03/26/19
PROFESSIONAL ENGINEER

SCALE: AS NOTED

DATE: 3/26/2019
PERMIT DOCUMENTS

REVISIONS: BASED ON

1 —

DESCRIPTION:
PERMIT/CONSTRUCT. DOCUMENTS

SHEET:
M1.2

COPYRIGHT: AUG. 26, 2016

RTU-4,5,6

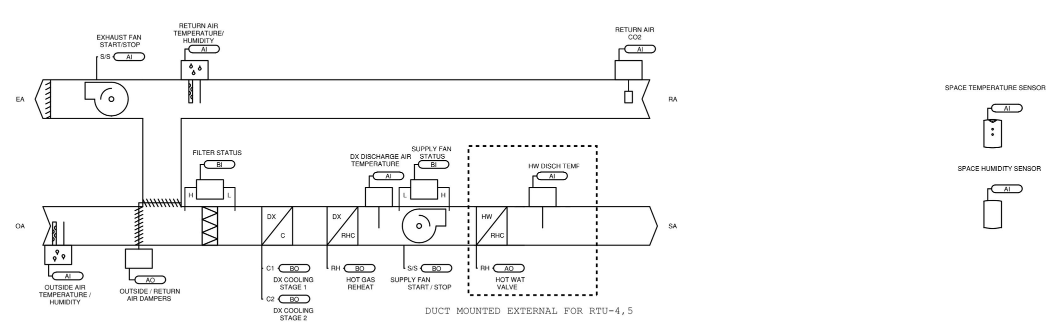

CV ROOFTOP, DX COOLING, HOT WATER HEATING, DEHUMIDIFICATION HOT GAS REHEAT, COMPARATIVE ENTHALPY ECONOMIZER, DEMAND CONTROLLED VENTILATION & POWER EXHAUST

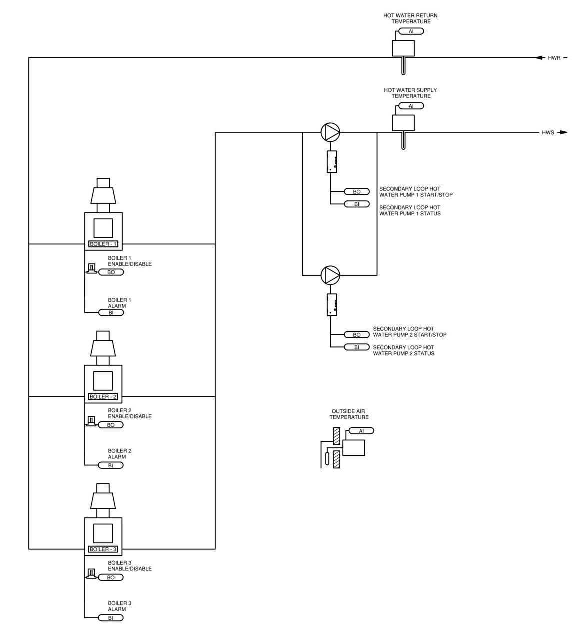

PRIMARY LOOP CONSTANT FLOW BOILER PLANT WITH THREE (3) HW BOILERS & TWO (2) CONSTANT VOLUME LOOP PUMPS

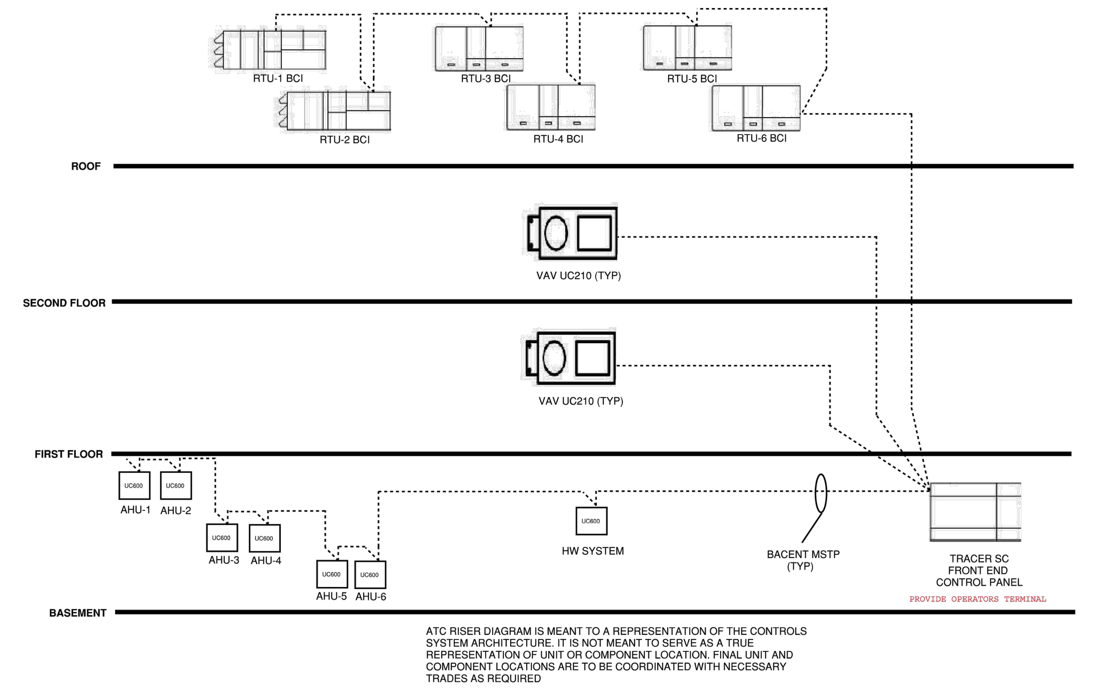

ATC RISER DIAGRAM

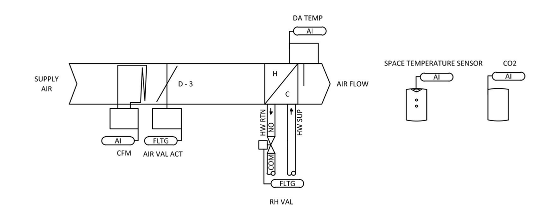

SHUTOFF VAV WITH HOT WATER HEAT

SYSTEM POINT LIST

CONTROLLER: RELIATEL / BCI-R

SYSTEM POINT DESCRIPTION: *RTU-4,5,6 PRECEDENT DX Cooling, Hot Water Heating, Dehumidification, Comparative Enthalpy Economizer, CO2 Demand Control Ventilation & Power Exhaust*

	SYSTEM POINT DESCRIPTION	GRAPHIC (POINT TYPE)	HARDWARE INPUT	HARDWARE OUTPUT	SOFTWARE POINT	DEFAULT VALUE	HIGH ANALOG LIMIT (ALARMS)	LOW ANALOG LIMIT	BINARY	LATCH DIAGNOSTIC	SENSOR FAIL	COMMUNICATION FAIL	DIAGNOSTICS	NOTES:
SPACE SENSOR	SPACE TEMPERATURE (THERM)		AI		X		X	X			X		DIAGNOSTIC ALARM STATUS	NOTE 2, 3
	SPACE TEMPERATURE SETPOINT		AI		X	72.5 F					X		DIAGNOSTIC ALARM STATUS	NOTE 1, 2, 3
	ON/CANCEL				X									NOTE 1, 2
	OUTDOOR AIR TEMPERATURE		AI		X						X		DIAGNOSTIC ALARM STATUS	NOTE 2, 3
	OUTDOOR AIR RELATIVE HUMIDITY		AI		X						X		DIAGNOSTIC ALARM STATUS	NOTE 2, 3
	RETURN AIR TEMPERATURE		AI		X						X		DIAGNOSTIC ALARM STATUS	NOTE 2
	RETURN AIR RELATIVE HUMIDITY		AI								X		DIAGNOSTIC ALARM STATUS	
	SPACE HUMIDITY		AI		X		X	X			X		DIAGNOSTIC ALARM STATUS	NOTE 2, 3
	SPACE RELATIVE HUMIDITY SETPOINT		AI		X	50.0%					X		DIAGNOSTIC ALARM STATUS	NOTE 2
	RETURN AIR CO2		AI		X		X	X			X		DIAGNOSTIC ALARM STATUS	NOTE 2, 3
	RETURN AIR C02 LIMIT		AI		X	900 PPM							DIAGNOSTIC ALARM STATUS	NOTE 2
	MIXED AIR TEMPERATURE	X	AI		X		X	X			X		DIAGNOSTIC ALARM STATUS	NOTE 3
	HW COIL DISCHARGE TEMPERATURE	X	AI		X		X	X			X		DIAGNOSTIC ALARM STATUS	NOTE 3
	ECONOMIZER DAMPER POSITION	X	AI		X									NOTE 3
	EXHAUST FAN ENABLE SETPOINT		AI											
	DIRTY FILTER		BI		X								DIAGNOSTIC ALARM STATUS	
	SUPPLY FAN STATUS		BI							X			DIAGNOSTIC ALARM STATUS	
	HIGH PRESSURE COMPRESSOR PROTECTION		BI							X			DIAGNOSTIC ALARM STATUS	
	LOW PRESSURE COMPRESSOR PROTECTION		BI							X			DIAGNOSTIC ALARM STATUS	
	EMERGENCY STOP		BI										DIAGNOSTIC ALARM STATUS	
	ECONOMIZER DAMPER OUTPUT			AO	X								DIAGNOSTIC ALARM STATUS	NOTE 3
	SUPPLY FAN START/STOP			BO										
	EXHAUST FAN START/STOP			BO										
	COMPRESSOR 1 START/STOP			BO										
	COMPRESSOR 2 START/STOP			BO										IF APPLICABLE
	CONDENSER FAN A START/STOP			BO										
	CONDENSER FAN B START/STOP			BO										IF APPLICABLE
	HOT WATER VALVE	X		AO	X									
	OCCUPANCY				X									NOTE 2
	OCCUPIED COOL SETPOINT				X	74.0 F								NOTE 2
	OCCUPIED HEAT SETPOINT				X	71.0 F								NOTE 2
	OCCUPIED STANDBY COOL SETPOINT				X	78.0 F								NOTE 2
	OCCUPIED STANDBY HEAT SETPOINT				X	67.0 F								NOTE 2
	UNOCCUPIED COOL SETPOINT				X	85.0 F								NOTE 2
	UNOCCUPIED HEAT SETPOINT				X	60.0 F								NOTE 2
	SETPOINT OFFSET				X									NOTE 2
	OCCUPIED BYPASS TIMER				X	120 MIN								NOTE 2
	COMPRESSOR ENABLE				X	AUTO								NOTE 2
	ECONOMIZER ENABLE				X	AUTO								NOTE 2
	HEAT / COOL MODE				X	COOL								NOTE 2
	FAN MODE COMMAND				X	ON								NOTE 2
	APPLICATION MODE				X	AUTO								NOTE 2
	OUTSIDE AIR DAMPER MINIMUM POSITION				X	10.00%								NOTE 2
	EFFECTIVE OCCUPANCY	X			X									NOTE 3
	EFFECTIVE HEAT / COOL MODE	X			X									NOTE 3
	EFFECTIVE SPACE TEMPERATURE	X			X									NOTE 3
	EFFECTIVE SPACE SETPOINT	X			X									NOTE 3
	LOCAL SETPOINT				X									NOTE 3
	COOL OUTPUT	X			X									NOTE 3
	ALARM	X			X									NOTE 3
	COMMUNICATION STATE				X							X		

GENERAL NOTES:
1. OPTIONAL FEATURE
2. SNVT NETWORK INPUT VARIABLE
3. SNVT NETWORK OUTPUT VARIABLE

HY0008 - SYSTEM POINT LIST

CONTROLLER: MP581 + EX2

SYSTEM POINT DESCRIPTION: *PRIMARY LOOP CONSTANT FLOW BOILER PLANT WITH: 3 HOT WATER BOILERS, WITHOUT CIRCULATING PUMPS, AND 2 CONSTANT VOLUME LOOP PUMPS*

	SYSTEM POINT DESCRIPTION	GRAPHIC (POINT TYPE)	HARDWARE INPUT	HARDWARE OUTPUT	SOFTWARE POINT	DEFAULT VALUE	HIGH ANALOG LIMIT (ALARMS)	LOW ANALOG LIMIT	BINARY	LATCH DIAGNOSTIC	SENSOR FAIL	COMMUNICATION FAIL	DIAGNOSTICS	NOTES:
OA SENSOR	OUTSIDE AIR TEMP (THERM)	X	AI				X	X			X		SENSOR FAILURE	NOTE 2, 5
	OUTSIDE AIR RH (4-20MA, 0-100%)												SENSOR FAILURE	NOTE 1, 2
	BOILER 1 ENABLE	X		BO										
	BOILER 2 ENABLE	X		BO										
	BOILER 3 ENABLE	X		BO										
	HWP 1 START/STOP	X		BO										
	HWP 2 START/STOP	X		BO										
	HW SUPPLY TEMP (THERM)	X	AI				X	X			X		SENSOR FAILURE	NOTE 5
	HW RETURN TEMP (THERM)	X	AI				X	X			X		SENSOR FAILURE	NOTE 5
	HWP 1 STATUS	X	BI						X	X			PUMP FAILURE	
	HWP 2 STATUS	X	BI						X	X			PUMP FAILURE	
	BOILER 1 ALARM	X	BI						X				BOILER ALARM	
	BOILER 2 ALARM	X	BI						X				BOILER ALARM	
	BOILER 3 ALARM	X	BI						X				BOILER ALARM	
	CALL FOR DEHUMIDIFICATION HEAT				X	OFF								
	HW DISTRIBUTION SUPPLY TEMP SETPOINT				X	120-180°F								
	OUTSIDE AIR TEMPERATURE ENABLE SETPOINT				X	60°F								
	BOILER LEAD				X	1								
	HWP LEAD				X	1								
	BAS COMMUNICATION STATE	X			X							X		NOTE 3
CONTROLLER SPARE HARDWARE POINTS														
	UNIVERSAL INPUT(S)		4											NOTE 4 & 5
	ANALOG OUTPUT(S)			6										NOTE 4
	BINARY OUTPUT(S)			1										NOTE 4

GENERAL NOTES:
1. OPTIONAL FEATURE
2. CAN BE A COMMUNICATED VALUE
3. DISPLAYED AT THE BAS USER INTERFACE IF PRESENT
4 SPARE OR UNUSED POINTS
5. CONTROLLER WILL ACCEPT RTD SENSOR ON INPUTS 1-4 ONLY
6. DEVICE IS HARDWIRE INTERLOCKED TO VFD, MANUAL RESET REQUIRED

TS0157 FLOW - SYSTEM POINTS LIST

CONTROLLER: UC210 VAV

SYSTEM POINT DESCRIPTION: *SINGLE DUCT VAV BOX WITH HOT WATER HEAT*

SYSTEM POINT DESCRIPTION	GRAPHIC (POINT TYPE)	HARDWARE INPUT	HARDWARE OUTPUT	SOFTWARE POINT	HARDWIRE INTERLOCK	DEFAULT VALUE	HIGH ANALOG LIMIT (ALARMS)	LOW ANALOG LIMIT	BINARY	LATCH DIAGNOSTIC	SENSOR FAIL	COMMUNICATION FAIL	DIAGNOSTICS	NOTES:
DISCHARGE AIR TEMPERATURE	X	AI					X	X			X			
PRESSURE 1	X	AI												
SPACE TEMPERATURE LOCAL	X	AI					X	X			X			
SPACE CO2	X	AI					X				X			AS REQUIRED
AIR VALVE DRIVE COMMAND	X		FLTG											
HEATING VALVE COMMAND	X		FLTG											
OCCUPIED COOLING SETPOINT				X		74.0 deg. F	X	X						NOTE 1, 2
OCCUPIED HEATING SETPOINT				X		71.0 deg. F	X	X						
OCCUPIED STANDBY COOLING SETPOINT				X		78.0 deg. F	X	X						
OCCUPIED STANDBY HEATING SETPOINT				X		67.0 deg. F	X	X						
UNOCCUPIED COOLING SETPOINT				X		85.0 deg. F								
UNOCCUPIED HEATING SETPOINT				X		60.0 deg. F								
MINIMUM COOLING AIRFLOW SETPOINT				X										NOTE 3
MAXIMUM COOLING AIRFLOW SETPOINT				X										NOTE 3
MINIMUM HEATING AIRFLOW SETPOINT				X										NOTE 3
MAXIMUM HEATING AIRFLOW SETPOINT				X										NOTE 3
OCCUPIED BYPASS TIMER				X										
BAS COMMUNICATION STATE				X		2 HRS						X		NOTE 4
CONTROLLER SPARE HARDWARE POINTS														
BINARY INPUT(S)		1												
UNIVERSAL INPUT(S)		2												
ANALOG OUTPUT(S)			2											
BINARY OUTPUT(S)			1											

GENERAL NOTES
1. OPTIONAL FEATURE
2. REQUIRES OCCUPANCY SENSOR
3. SEE VAV SCHEDULE FOR VALUES
4. DISPLAYED AT THE BAS USER INTERFACE IF PRESENT

Sequence of Operations
RTU–4,5 will reuse existing duct HW coil with new control valve – controlled by RTU controller
RTU–6 will have integral HW coil with control valve – controlled by RTU controller

Building Automation System Interface:
The Building Automation System (BAS) shall send the controller Occupied Bypass, Pre–Cool, Occupied / Unoccupied and Heat / Cool modes. If a BAS is not present, or communication is lost with the BAS the controller shall operate using default modes and setpoints.

Occupied Mode:
During occupied periods, the supply fan shall run continuously and the outside air damper shall open to maintain minimum ventilation requirements. The DX cooling shall stage and the hot water heat shall modulate to maintain the occupied space temperature setpoint. If economizing is enabled the outside air damper shall modulate to maintain the occupied space temperature setpoint.

Unoccupied Mode:
When the space temperature is below the unoccupied heating setpoint of 60.0 deg. F (adj.) the supply fan shall start, the outside air damper shall remain closed and the hot water heat shall be enabled. When the space temperature rises above the unoccupied heating setpoint of 60.0 deg. F (adj.) plus the unoccupied differential of 4.0 deg. F (adj.) the supply fan shall stop and the hot water heat shall be disabled.

When the space temperature is above the unoccupied cooling setpoint of 85.0 deg. F (adj.) the supply fan shall start, the outside air damper shall open if economizing is enabled and remain closed if economizing is disabled and the DX cooling shall be enabled. When the space temperature falls below the unoccupied cooling setpoint of 85.0 deg. F minus the unoccupied differential of 4.0 deg. F (adj.) the supply fan shall stop, the DX cooling shall be disabled and the outside air damper shall close.

Optimal Start:
The BAS shall monitor the scheduled occupied time, occupied space setpoints and space temperature to calculate when the optimal start occurs.

Morning Warm–Up Mode:
During optimal start, if the average space temperature is below the occupied heating setpoint a morning warm–up mode shall be activated. When morning warm–up is initiated the unit shall enable the heating and supply fan. The outside air damper shall remain closed. When the average space temperature reaches the occupied heating setpoint (adj.), the unit shall transition to the occupied mode.

Pre–Cool Mode:
During optimal start, if the space temperature is above the occupied cooling setpoint, pre–cool mode shall be activated. When pre–cool is initiated the unit shall enable the fan and cooling or economizer. The outside air damper shall remain closed, unless economizing. When the space temperature reaches occupied cooling setpoint (adj.), the unit shall transition to the occupied mode.

Optimal Stop:
The BAS shall monitor the scheduled unoccupied time, occupied setpoints and space temperature to calculate when the optimal stop occurs. When the optimal stop mode is active the unit controller shall maintain the space temperature to the space temperature offset setpoint.

Occupied Bypass:
The BAS shall monitor the status of the "on" and "cancel" buttons of the space temperature sensor. When an occupied bypass request is received from a space sensor, the unit shall transition from its current occupancy mode to occupied bypass mode and the unit shall maintain the space temperature to the occupied setpoints (adj.).

Cooling Mode:
The unit controller shall use space temperature and space temperature setpoint to determine when to initiate requests for cooling. When the space temperature rises above the setpoint, the unit controller shall modulate the economizer or stage the DX cooling as required to maintain the space temperature setpoint. The first compressor shall energize after its minimum 3–minute off time has expired. If additional cooling capacity is required the second stage of cooling shall be enabled. Once the space temperature falls below the setpoint the compressors shall be deactivated and the economizer shall return to minimum position.

Heating Mode:
The unit controller shall use space temperature and space temperature setpoint to determine when to initiate requests for heating. The hot water valve will modulate to maintain the space temperature setpoint.

Dehumidification:
Factory installed hot gas reheat shall allow application of dehumidification. Dehumidification shall be allowed only when the outside air temperature is above 40.0 deg. F and below 100.0 deg. F. The economizer outside air damper shall drive to minimum position during dehumidification.

Single compressor units:
On a call for dehumidification, the reheat valve shall energize and the compressor shall enable. When the humidity control setpoint is satisfied, the valve shall be de–energized and the compressor shall be disabled. If there is a call for cooling from the space temperature controller, while in reheat, the reheat valve shall be de–energized and the compressor continues to run.

Dual compressor units:
On a call for dehumidification, the reheat valve shall energize and both compressors shall enable. When the humidity control setpoint is satisfied, the valve shall be de–energized and both compressors shall be disabled. If there is a call for 1st stage cooling while in the dehumidification mode, no action shall take place. If there is a call for 2nd stage cooling, the reheat valve shall be de–energized, and the unit shall revert to the cooling mode. If 2nd stage cooling is satisfied and there is still a call for dehumidification, the reheat valve shall once again be energized.

Economizer:
The mixed air sensor shall measure the dry bulb temperature of the air leaving the evaporator coil while economizing. When economizing is enabled and the unit is operating in the cooling mode, the economizer damper shall be modulated between its minimum position and 100% to maintain the space temperature setpoint. The economizer damper shall modulate toward minimum position in the event the mixed air temperature falls below the low limit temperature setting. Compressors shall be delayed from operating until the economizer has opened to 100%.

Comparative Enthalpy:
Outside air (OA) enthalpy shall be compared with Return air (RA) enthalpy point. The economizer shall enable when OA enthalpy is less than RA enthalpy – 3.0 BTU/LB. The economizer shall disable when OA enthalpy is greater than RA enthalpy.

Demand Control Ventilation:
When the demand control ventilation (DCV) threshold is reached, the economizer shall start to modulate open to bring in more fresh air to reduce the return air CO2 level. The damper shall modulate open in small increments until the CO2 level is satisfied or the damper reaches the full open position. Once the threshold is satisfied, the damper shall return to normal economizer operation. If the mixed air temperature drops to 40.0 deg. F, the CO2 sensor input is overridden and closes the damper to minimum position. When the mixed air temperature rises to 43.0 deg. F, CO2 or economizer operation is once again restored.

Supply Fan:
The supply fan shall be enabled while in the occupied mode and cycled on during the unoccupied mode. A differential pressure switch shall monitor the differential pressure across the fan. If the switch does not open within 40 seconds after a request for fan operation a fan failure alarm shall be annunciated at the BAS, the unit shall stop, requiring a manual reset.

Building Pressure Control:
The power exhaust shall enable when the economizer damper position is equal to or greater than the exhaust fan setpoint.

Filter Status:
A differential pressure switch shall monitor the differential pressure across the filter when the fan is running. If the switch closes for 2 minutes after a request for fan operation a dirty filter alarm shall be annunciated at the BAS.

Sequence of Operations
Hot Water System

General Description:
The hot water system consists of multiple boilers and associated pumps. The Building Automation System (BAS) controller shall provide stand–alone control or BAS workstation control of the supply heating water temperature setpoint (adj.) by controlling the boiler's enable/disable boiler signal and hot water tempering valve. The BAS controller shall be equipped with a human–interface panel that shall be password protected to prevent unauthorized access.

Heating System Enable/Disable:
The heating system shall be enabled when the outside air temperature falls below 60.0 deg. F (adj.) or on a command for dehumidification. When enabled, the BAS controller shall start the lead hot water distribution pump and enable the lead boiler. The boiler factory control shall operate the boiler to maintain its local supply setpoint.

Heating shall be disabled when the outdoor air temperature is above 65.0 deg. F (adj.) and there is no command for dehumidification. When heating is disabled, the hot water pumps and boilers shall be commanded to OFF. The BAS controller human–interface panel shall be able to individually enable the hot water distribution pumps or the boilers.

Boiler Control:
The boiler lead/lag sequence shall be based on a weekly schedule. From the BAS controller human–interface panel or a BAS workstation, an operator shall be able to manually change the lead/lag sequence.

Note: This is the minimum points required for the system but if additional points are required to execute the sequence of operation it is the responsibility of the controls contractor validate and provide them.

If the hot water distribution system supply temperature falls more than 25.0 deg. F (adj.) below setpoint for a period longer than 15 minutes (adj.), or if an active boiler signals a failure alarm, the BAS controller shall enable the lag boiler. In addition, the BAS controller shall send an alarm to the BAS workstation. When a boiler failure exists, lead/lag automation shall be disabled and the currently running boiler shall become the lead boiler. Once the problem is corrected, the operator shall be able to clear the alarm failure from the BAS controller or BAS workstation. This shall re–enable the lead/lag sequence.

Once the lead boiler is enabled, the add sequence of additional boilers shall be disabled for a period of 30 minutes (adj.). Additional boilers are added if the hot water distribution system supply temperature falls 5.0 deg. F (adj.) below the hot water setpoint for a period of 10 minutes (adj.) or more.

The last boiler enabled shall be disabled when the hot water temperature rises 5.0 deg. F (adj.) above the hot water setpoint for a period of 10 minutes (adj.) or more. Additional boilers shall be disabled following the same subtraction sequence if the hot water temperature remains 5.0 deg. F (adj.) above the hot water setpoint for a period of 10 minutes (adj.) or more.

Hot Water Reset:
The hot water supply temperature setpoint shall be linearly reset from 120.0 deg. F (adj.) to 180.0 deg. F (adj.) as the outside air temperature falls from 60.0 deg. F (adj.) to 0.0 deg. F (adj.)

Hot Water Distribution Pump Start/Stop:
The BAS controller shall start a hot water pump through a contact closure of the pump's motor starter enable contacts.

Hot Water Distribution Pump Status:
The BAS controller shall detect hot water pump run status by a current switch.

Hot Water Distribution Pump Lead/Lag:
The hot water pump lead/lag sequence shall be based on a weekly schedule. From the BAS controller human–interface panel or a BAS workstation, an operator shall be able to manually change the lead/lag sequence.

Hot Water Distribution Pump Failure:
If the lead start/stop relay is enabled and the current switch status is off for more than 30 seconds (adj.), the BAS controller shall annunciate a hot water pump failure alarm to the BAS workstation and starts the lag pump. When a pump failure exists, lead/lag automation shall be disabled and the currently running pump becomes the lead pump. Once the problem has been corrected, the operator shall be able to clear the alarm failure from the BAS controller or BAS workstation. This action shall re–enable the lead/lag sequence.

Freeze Protection:
When the outdoor air temperature falls below 35.0 deg. F (adj.), the hot water distribution pump shall operate continuously to provide hot water circulation to all associated hot water coils. If the hot water supply temperature falls below 130.0 deg. F (adj.) during unoccupied periods, the boiler sequence shall be enabled to safeguard against low water temperature and boiler condensation.

Sequence of Operations
VAV Box

Building Automation System Interface:
The Building Automation System (BAS) shall send the controller Occupied and Unoccupied commands. The BAS may also send a Heat/Cool mode, priority shutdown commands, space temperature and/or space temperature setpoint. If communication is lost with the BAS, the VAV controller shall operate using its local setpoints.

Occupancy Mode:
The occupancy mode shall be communicated or hardwired to the VAV via a binary input. Valid Occupancy modes for the VAV shall be:

Occupied:
Normal operating mode for occupied spaces or daytime operation. When the unit is in the occupied mode the VAV shall maintain the space temperature at the active occupied heating or cooling setpoint. Applicable ventilation and airflow setpoints shall be enforced. The occupied mode shall be the default mode of the VAV.

Unoccupied:
Normal operating mode for unoccupied spaces or nighttime operation. When the unit is in unoccupied mode the VAV controller shall maintain the space temperature at the stored unoccupied heating or cooling setpoint regardless of the presence of a hardwired or communicated setpoint. When the space temperature exceeds the active unoccupied setpoint the VAV shall modulate fully closed.

Occupied Bypass:
Mode used to temporarily place the unit into the occupied operation. Tenants shall be able to override the unoccupied mode from the space sensor. The override shall last for a maximum of 4 hours (adj.). The tenants shall be able to cancel the override from the space sensor at any time. During the override the unit shall operate in occupied mode.

Heat/Cool Mode:
The Heat/Cool mode shall be set by a communicated value or automatically by the VAV. In standalone or auto mode the VAV shall compare the primary air temperature with the configured auto changeover setpoint to determine if the air is "hot" or "cold". Heating mode shall command the VAV to heat only; it implies the primary air temperature is hot. Cooling mode shall command the VAV to cool only; it implies the primary air temperature is cold.

Heat/Cool Setpoint:
The space temperature setpoint shall be determined either by a local (e.g., thumbwheel) setpoint, the VAV default setpoint or a communicated value. The VAV shall use the locally stored default setpoints when neither a local setpoint nor communicated setpoint is present. If both a local setpoint and communicated setpoint exist, the VAV shall use the communicated value.

Cooling Mode:
When the unit is in cooling mode, the VAV controller shall maintain the space temperature at the active cooling setpoint by modulating the airflow between the active cooling minimum airflow setpoint to the maximum cooling airflow setpoint. Based on the VAV controller occupancy mode, the active cooling setpoint shall be one of the following:

Setpoint	Default Value
Occupied Cooling Setpoint	74.0 deg. F
Unoccupied Cooling Setpoint	85.0 deg. F
Occupied Standby Cooling Setpoint	78.0 deg. F
Occupied Min Cooling Airflow Setpoint	See VAV Schedule
Occupied Max Cooling Airflow Setpoint	See VAV Schedule

The VAV shall use the measured space temperature and the active cooling setpoint to determine the requested cooling capacity of the unit. The outputs will be controlled based on the unit configuration and the requested cooling capacity.

Heating Mode:
When the unit is in heating mode, the VAV controller shall maintain the space temperature at the active heating setpoint by modulating the airflow between the active heating minimum airflow setpoint to the maximum heating airflow setpoint. Based on the VAV controller occupancy mode, the active heating setpoint shall be one of the following:

Setpoint	Default Value
Occupied Heating Setpoint	71.0 deg. F
Unoccupied Heating Setpoint	60.0 deg. F
Occupied Standby Heating Setpoint	67.0 deg. F
Occupied Min Heating Airflow Setpoint	See VAV Schedule
Occupied Max Heating Airflow Setpoint	See VAV Schedule

The VAV controller shall use the measured space temperature and the active heating setpoint to determine the requested heating capacity of the unit. The outputs will be controlled based on the unit configuration and the requested heating capacity.

Reheat Control:
Reheat shall only be allowed when the primary air temperature is 5.0 deg. F below the configured reheat enable setpoint of 70.0 deg. F (adj.). The reheat shall be enabled when the space temperature drops below the active cooling setpoint and the airflow is at the minimum cooling airflow setpoint. During reheat the VAV shall operate at its minimum heating airflow setpoint and energize the heat as follows:

Proportional Hot Water Reheat:
If the space temperature is below the heating setpoint the hot water reheat valve shall modulate as required to maintain the active heating setpoint.

Demand Controlled Ventilation:
If the CO2 level in the designated spaces rises above setpoint, the VAV box will modulate open to lower the CO2 level and the BAS will index the RTU accordingly.

Space Sensor Failure:
If there is a fault with the operation of the zone sensor an alarm shall be annunciated at the BAS. Space sensor failure shall cause the VAV to drive the damper to minimum air flow if the VAV is in the occupied mode, or drive it closed if the VAV is in the unoccupied mode.

HANDLEY LIBRARY
100 WEST PICCADILLY STREET
WINCHESTER, VA 22601

PAINTER-LEWIS P.L.C.
817 CEDAR CREEK GRADE
SUITE 120
WINCHESTER, VA. 22601
t: (540) 662-5792
f: (540) 662-5793
office@painterlewis.com

COMFORT DESIGN, INC.
620 PENNSYLVANIA AVENUE
WINCHESTER, VA 22601
t: (540) 665-2846
f: (540) 665-0038

COMMONWEALTH OF VIRGINIA
JOSHUA L. CATLETT
No. 042501
03/26/19
PROFESSIONAL ENGINEER

SCALE: AS NOTED

DATE: 3/26/2019
PERMIT DOCUMENTS

REVISIONS: BASED ON

1	---

DESCRIPTION:
PERMIT/CONSTRUCT. DOCUMENTS

SHEET:
M1.3

COPYRIGHT: AUG. 26, 2016

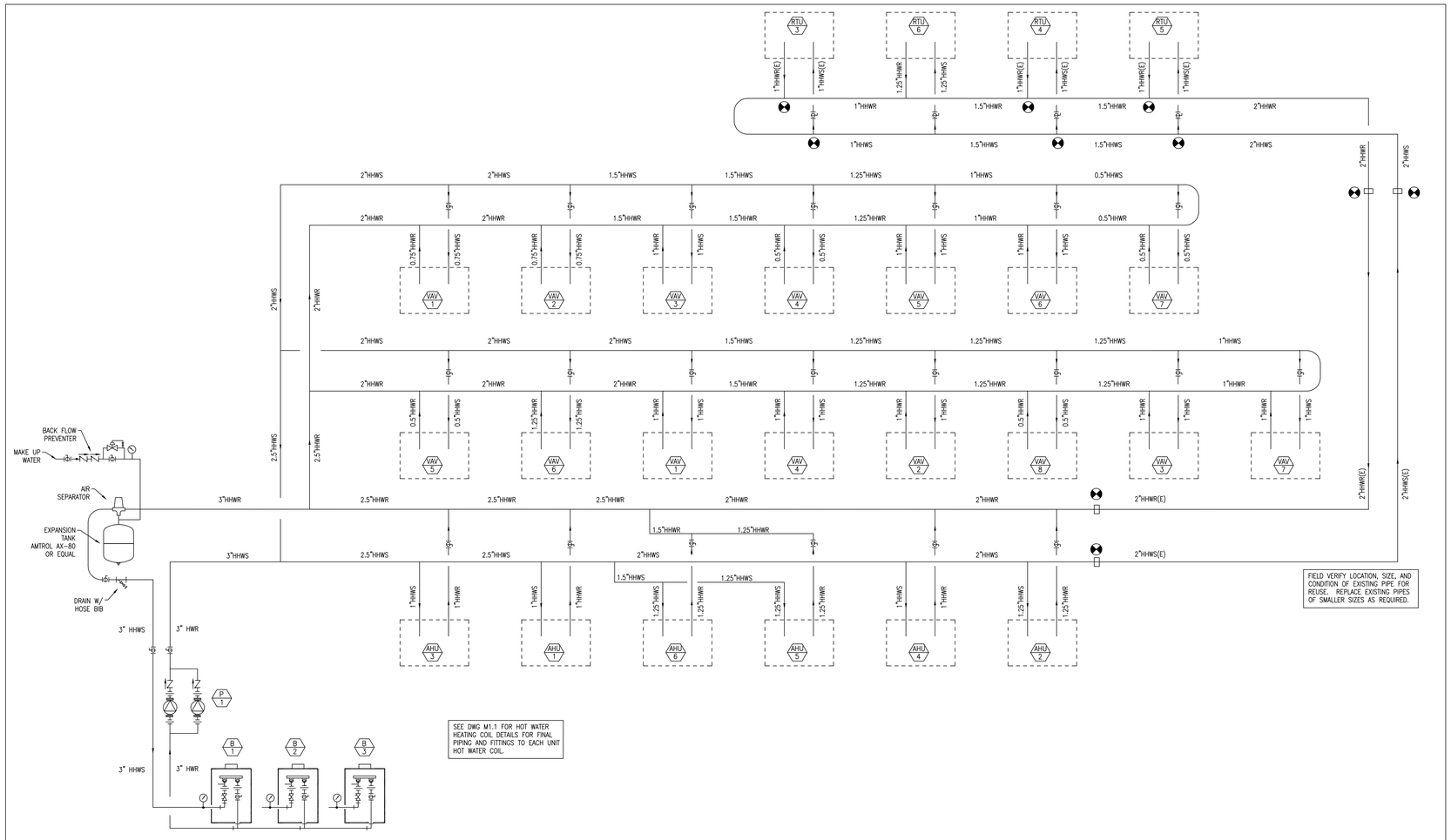

1 HOT WATER PIPING DIAGRAM
NOT TO SCALE

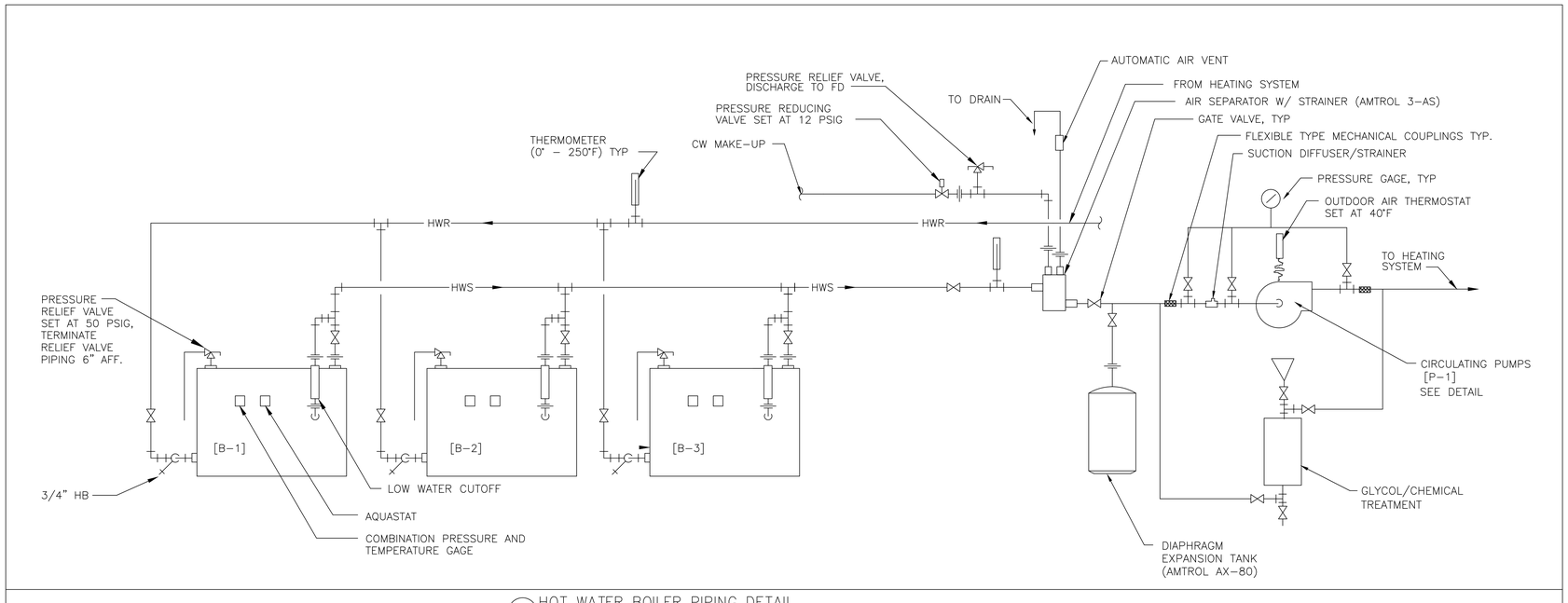

2 HOT WATER BOILER PIPING DETAIL
NOT TO SCALE

HANDLEY LIBRARY

100 WEST PICCADILLY STREET
WINCHESTER, VA 22601

PAINTER-LEWIS P.L.C.
817 CEDAR CREEK GRADE
SUITE 120
WINCHESTER, VA. 22601
t: (540) 662-5792
f: (540) 662-5793
office@painterlewis.com

COMFORT DESIGN, INC.
620 PENNSYLVANIA AVENUE
WINCHESTER, VA 22601
t: (540) 665-2846
f: (540) 665-0038

COMMONWEALTH OF VIRGINIA
JOSHUA L. CATLETT
No. 042501
03/26/19
PROFESSIONAL ENGINEER

SCALE: AS NOTED

DATE: 3/26/2019
PERMIT DOCUMENTS

REVISIONS: BASED ON

1	---

DESCRIPTION:
PERMIT/CONSTRUCT. DOCUMENTS

SHEET:
M1.4

COPYRIGHT: AUG. 26, 2016

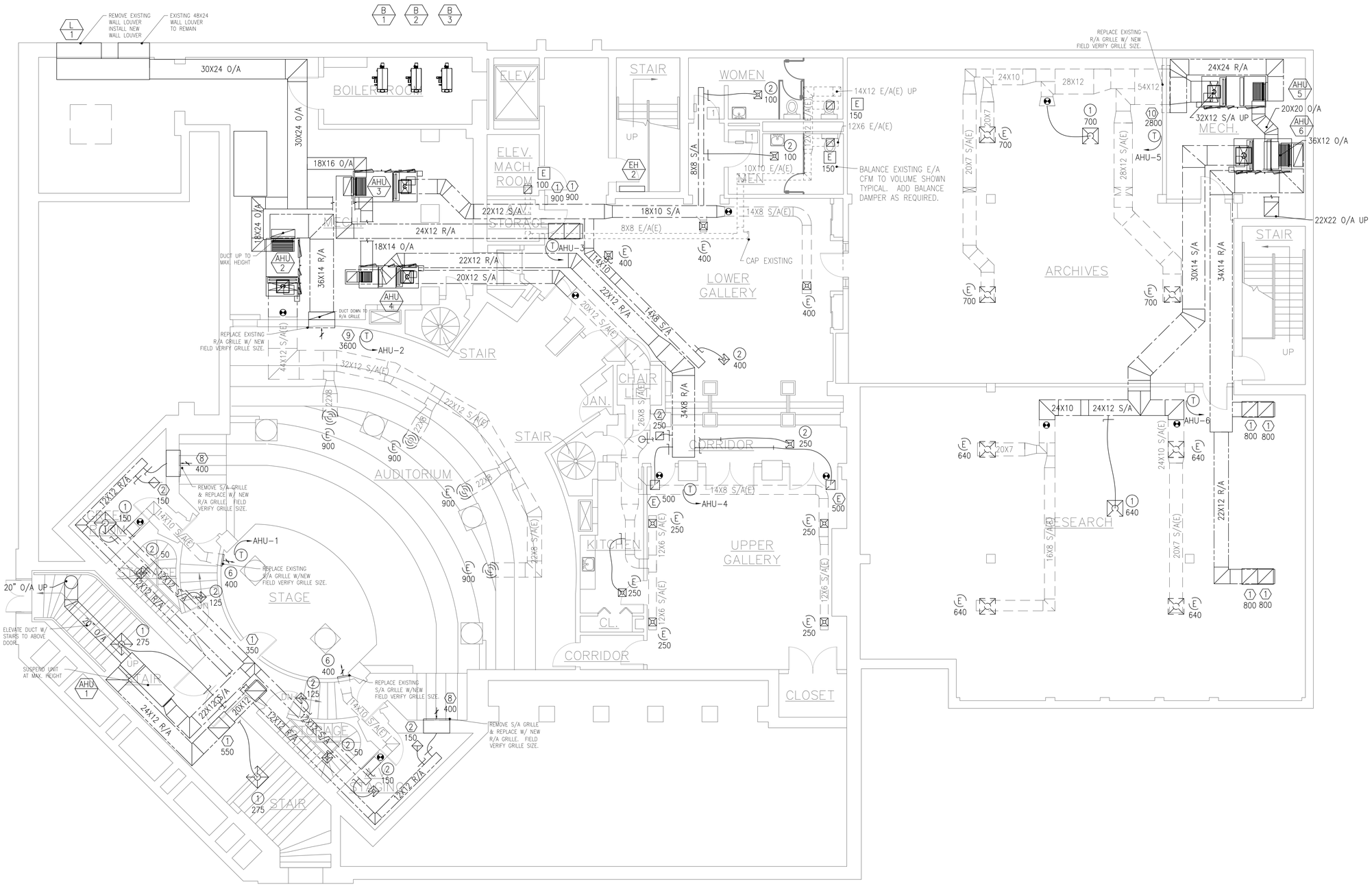

1 M2.0 LOWER LEVEL MECHANICAL PLAN

3/16" = 1'-0"

HANDLEY LIBRARY

100 WEST PICCADILLY STREET
WINCHESTER, VA 22601

PAINTER-LEWIS P.L.C.
817 CEDAR CREEK GRADE
SUITE 120
WINCHESTER, VA. 22601
t: (540) 662-5792
f: (540) 662-5793
office@painterlewis.com

COMFORT DESIGN, INC.
620 PENNSYLVANIA AVENUE
WINCHESTER, VA 22601
t: (540) 665-2846
f: (540) 665-0038

COMMONWEALTH OF VIRGINIA
JOSHUA L. CATLETT
No. 042501
03/26/19
PROFESSIONAL ENGINEER

SCALE: AS NOTED

DATE: 3/26/2019
PERMIT DOCUMENTS

REVISIONS: BASED ON

1	---	

DESCRIPTION:
PERMIT/CONSTRUCT. DOCUMENTS

SHEET:
M2.0

COPYRIGHT: AUG. 26, 2016

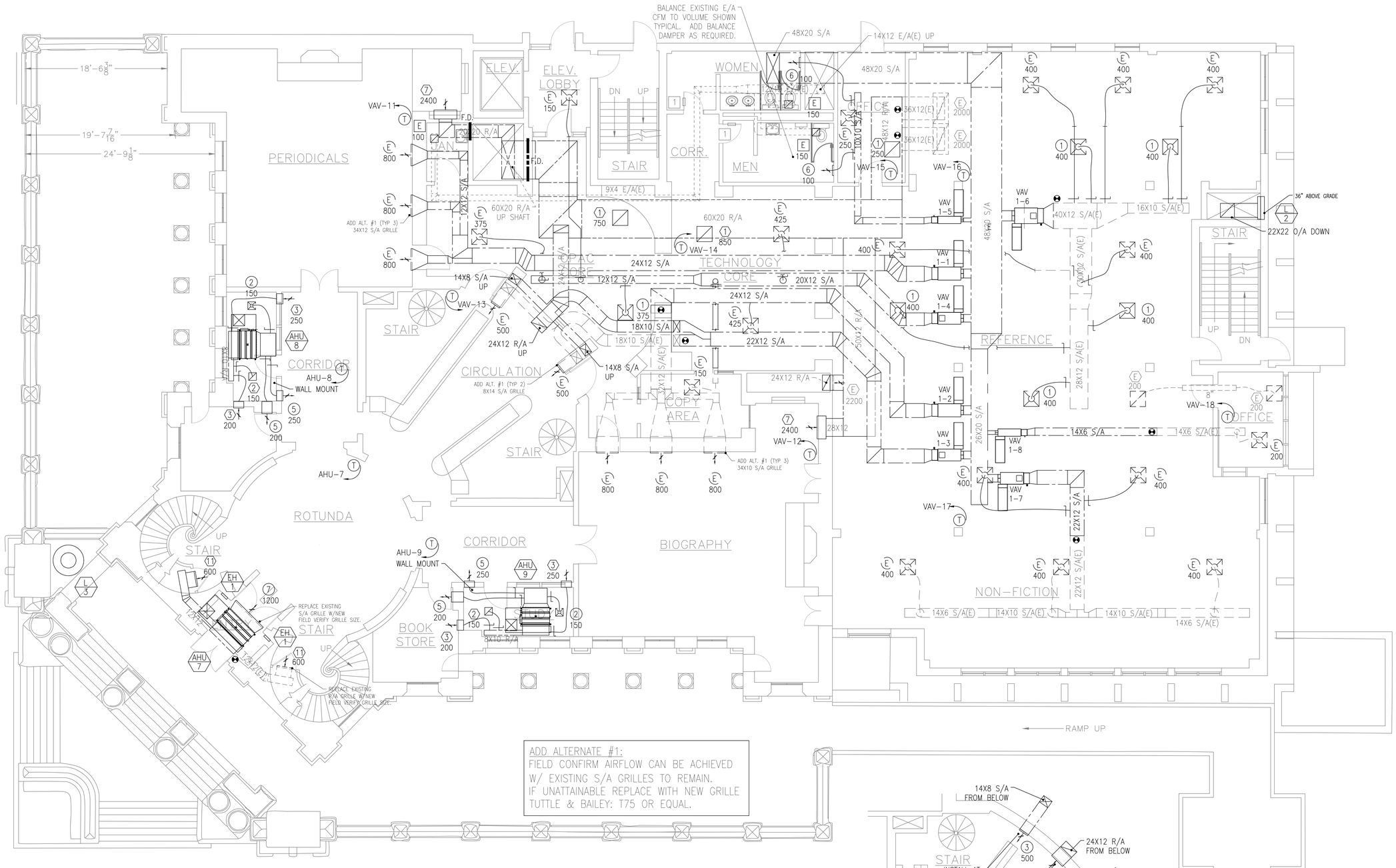

1 M2.1 FIRST FLOOR MECHANICAL PLAN
3/16" = 1'-0"

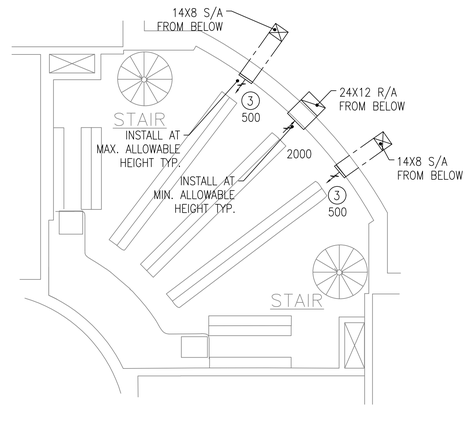

2 M2.1 MEZZANINE MECHANICAL PLAN
3/16" = 1'-0"

HANDLEY LIBRARY

100 WEST PICCADILLY STREET
WINCHESTER, VA 22601

PAINTER-LEWIS P.L.C.
817 CEDAR CREEK GRADE
SUITE 120
WINCHESTER, VA. 22601
t: (540) 662-5792
f: (540) 662-5793
office@painterlewis.com

COMFORT DESIGN, INC.
620 PENNSYLVANIA AVENUE
WINCHESTER, VA 22601
t: (540) 665-2846
f: (540) 665-0038

COMMONWEALTH OF VIRGINIA
JOSHUA L. CATLETT
No. 042501
03/26/19
PROFESSIONAL ENGINEER

SCALE: AS NOTED

DATE: 3/26/2019
PERMIT DOCUMENTS

REVISIONS: BASED ON

1	--	

DESCRIPTION:
PERMIT/CONSTRUCT. DOCUMENTS

SHEET:
M2.1

COPYRIGHT: AUG. 26, 2016

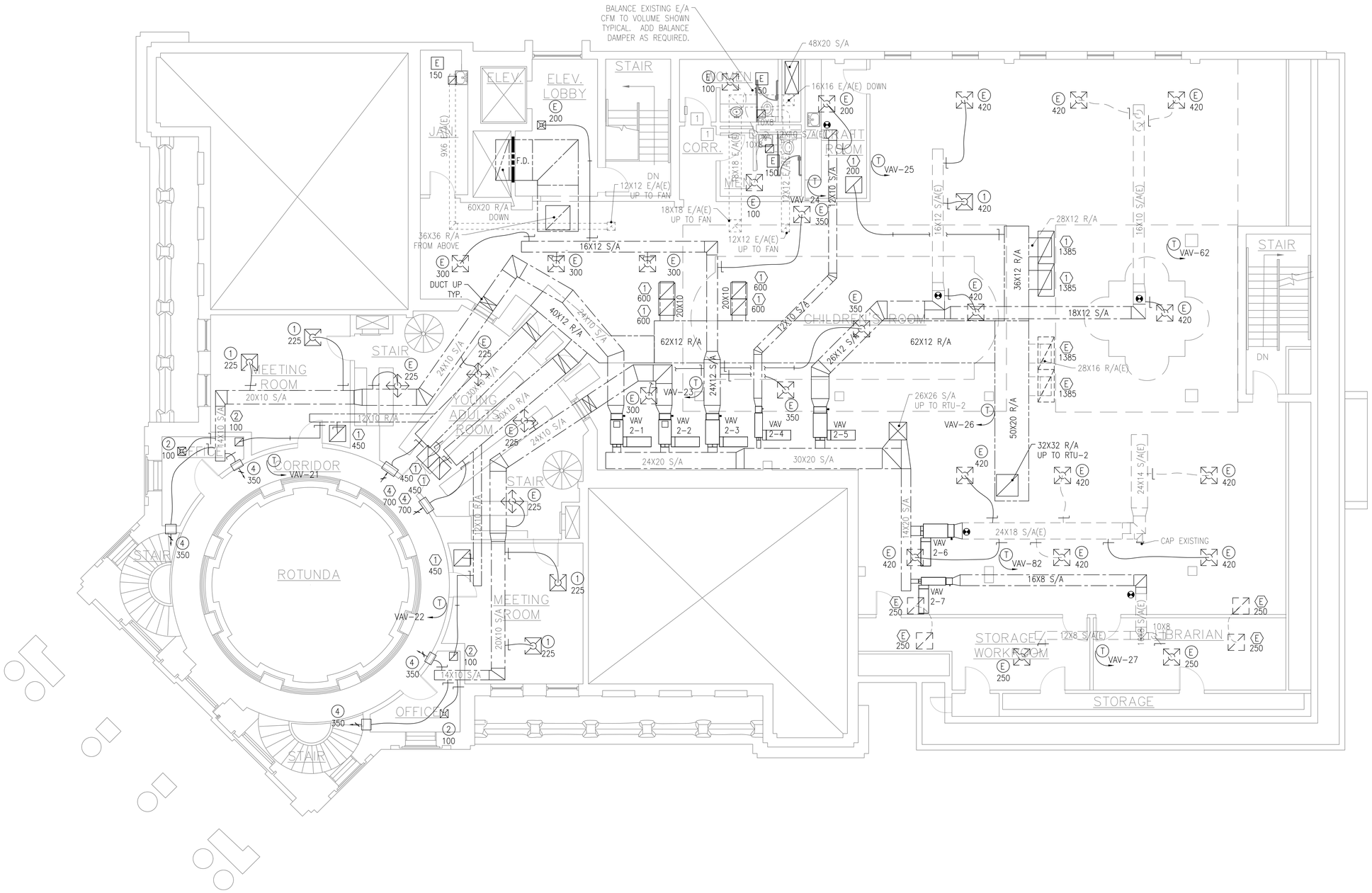

1 M2.2 SECOND FLOOR MECHANICAL PLAN

3/16" = 1'-0"

HANDLEY LIBRARY

100 WEST PICCADILLY STREET
WINCHESTER, VA 22601

PAINTER-LEWIS P.L.C.
817 CEDAR CREEK GRADE
SUITE 120
WINCHESTER, VA. 22601
t: (540) 662-5792
f: (540) 662-5793
office@painterlewis.com

COMFORT DESIGN, INC.
620 PENNSYLVANIA AVENUE
WINCHESTER, VA 22601
t: (540) 665-2846
f: (540) 665-0038

COMMONWEALTH OF VIRGINIA
JOSHUA L. CATLETT
No. 042501
03/26/19
PROFESSIONAL ENGINEER

SCALE: AS NOTED

DATE: 3/26/2019
PERMIT DOCUMENTS

REVISIONS: BASED ON

1	---	

DESCRIPTION:
PERMIT/CONSTRUCT. DOCUMENTS

SHEET:
M2.2

COPYRIGHT: AUG. 26, 2016

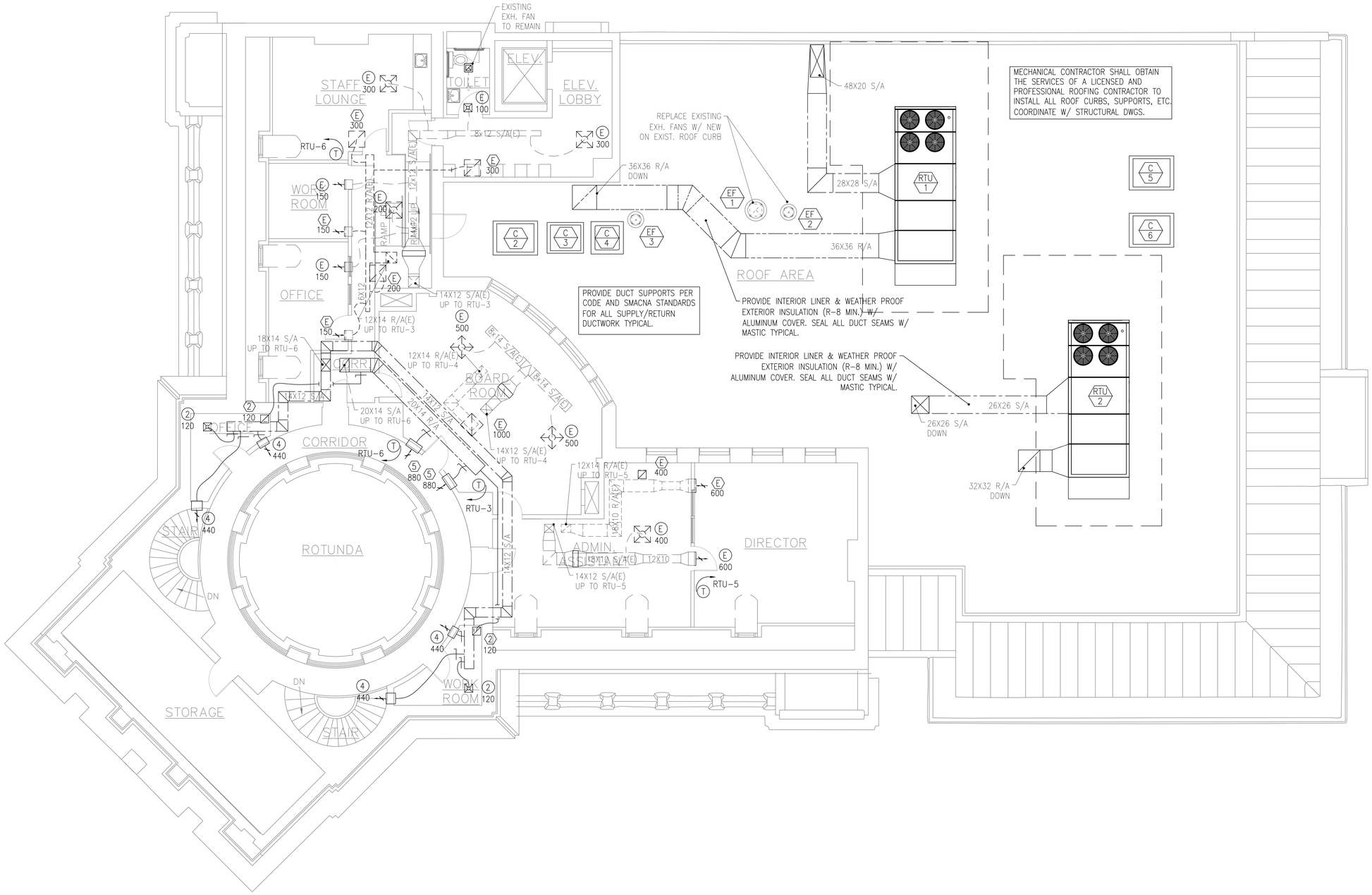

1 M2.3 THIRD FLOOR MECHANICAL PLAN

3/16" = 1'-0"

HANDLEY LIBRARY

100 WEST PICCADILLY STREET
WINCHESTER, VA 22601

PAINTER-LEWIS P.L.C.
817 CEDAR CREEK GRADE
SUITE 120
WINCHESTER, VA. 22601
t: (540) 662-5792
f: (540) 662-5793
office@painterlewis.com

COMFORT DESIGN, INC.
620 PENNSYLVANIA AVENUE
WINCHESTER, VA 22601
t: (540) 665-2846
f: (540) 665-0038

COMMONWEALTH OF VIRGINIA
JOSHUA L. CATLETT
No. 042501
03/26/19
PROFESSIONAL ENGINEER

SCALE: AS NOTED

DATE: 3/26/2019
PERMIT DOCUMENTS

REVISIONS: BASED ON

1	---	

DESCRIPTION:
PERMIT/CONSTRUCT. DOCUMENTS

SHEET:
M2.3

COPYRIGHT: AUG. 26, 2016

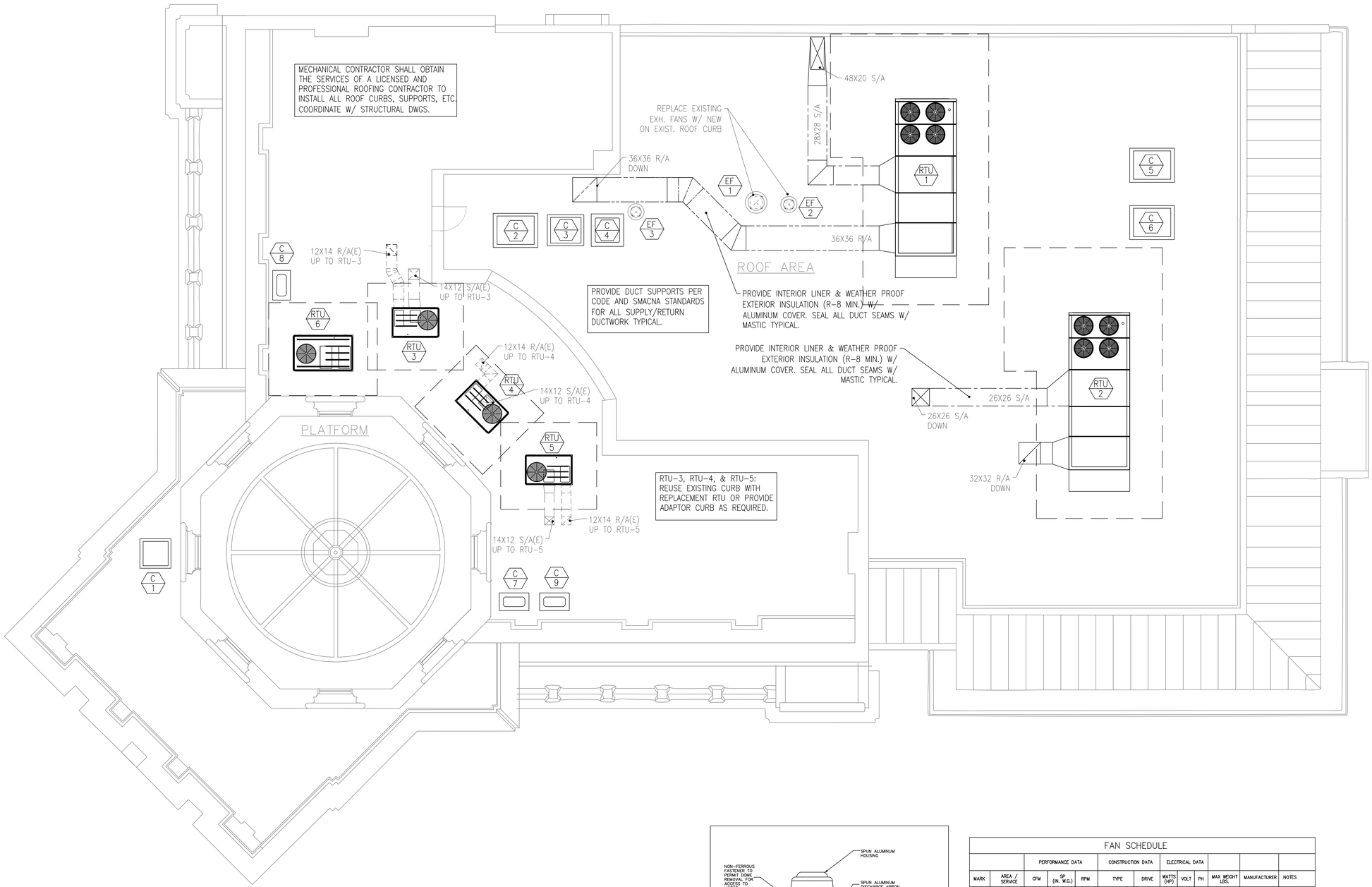

1 M2.4 ROOF MECHANICAL PLAN
3/16" = 1'-0"

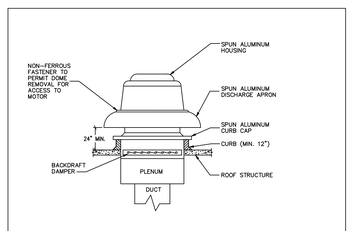

2 ROOF EXHAUST FAN DETAIL
NOT TO SCALE

FAN SCHEDULE

		PERFORMANCE DATA			CONSTRUCTION DATA		ELECTRICAL DATA					
MARK	AREA / SERVICE	CFM	SP (IN. W.G.)	RPM	TYPE	DRIVE	WATTS (HP)	VOLT	PH	MAX WEIGHT LBS.	MANUFACTURER	NOTES
EF 1	BATHROOMS	800	0.75	1593	ROOF MOUNTED	DIRECT	(1/4)	115	1	37	GREENHECK G-099-VG	1,2,3
EF 2	BATHROOMS	300	0.25	1641	ROOF MOUNTED	DIRECT	(1/15)	115	1	19	GREENHECK G-070-VG	1,2,3
EF 3	JANITOR CLOSET	150	0.25	1711	ROOF MOUNTED	DIRECT	(1/15)	115	1	18	GREENHECK G-060-VG	2,3,4

NOTES:
1. EXHAUST FANS SHALL HAVE PROGRAMMABLE TIMER. SET TO RUN CONTINUOUS DURING OCCUPIED HOURS.
2. STANDARD PREWIRED DISCONNECT SWITCH
3. VIBRATION ISOLATORS AND BRACKETS
4. EXHAUST FANS SHALL HAVE WALL SWITCH.

HANDLEY LIBRARY
100 WEST PICCADILLY STREET
WINCHESTER, VA 22601

PAINTER-LEWIS P.L.C.
817 CEDAR CREEK GRADE
SUITE 120
WINCHESTER, VA. 22601
t: (540) 662-5792
f: (540) 662-5793
office@painterlewis.com

COMFORT DESIGN, INC.
620 PENNSYLVANIA AVENUE
WINCHESTER, VA 22601
t: (540) 665-2846
f: (540) 665-0038

COMMONWEALTH OF VIRGINIA
JOSHUA L. CATLETT
No. 042501
03/26/19
PROFESSIONAL ENGINEER

SCALE: AS NOTED

DATE: 3/26/2019
PERMIT DOCUMENTS

REVISIONS: BASED ON

1	---	

DESCRIPTION:
PERMIT/CONSTRUCT. DOCUMENTS

SHEET:
M2.4

COPYRIGHT: AUG. 26, 2016

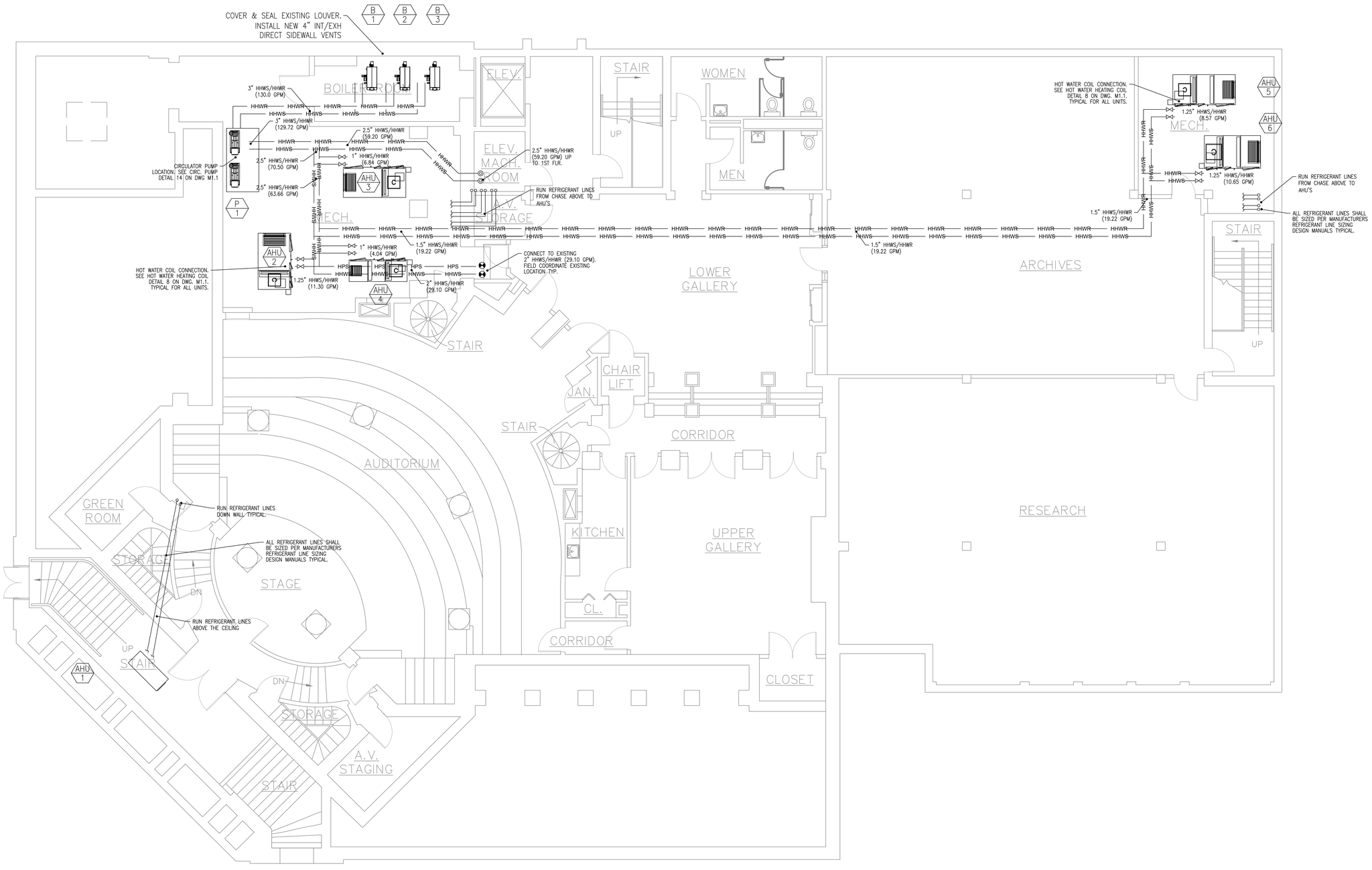

1 M3.0 LOWER LEVEL HOT WATER & A/C PIPING PLAN

3/16" = 1'-0"

HANDLEY LIBRARY

100 WEST PICCADILLY STREET
WINCHESTER, VA 22601

PAINTER-LEWIS P.L.C.
817 CEDAR CREEK GRADE
SUITE 120
WINCHESTER, VA. 22601
t: (540) 662-5792
f: (540) 662-5793
office@painterlewis.com

COMFORT DESIGN, INC.
620 PENNSYLVANIA AVENUE
WINCHESTER, VA 22601
t: (540) 665-2846
f: (540) 665-0038

COMMONWEALTH OF VIRGINIA
JOSHUA L. CATLETT
No. 042501
03/26/19
PROFESSIONAL ENGINEER

SCALE: AS NOTED

DATE: 3/26/2019
PERMIT DOCUMENTS

REVISIONS: BASED ON

1	--	

DESCRIPTION:
PERMIT/CONSTRUCT. DOCUMENTS

SHEET:
M3.0

COPYRIGHT: AUG. 26, 2016

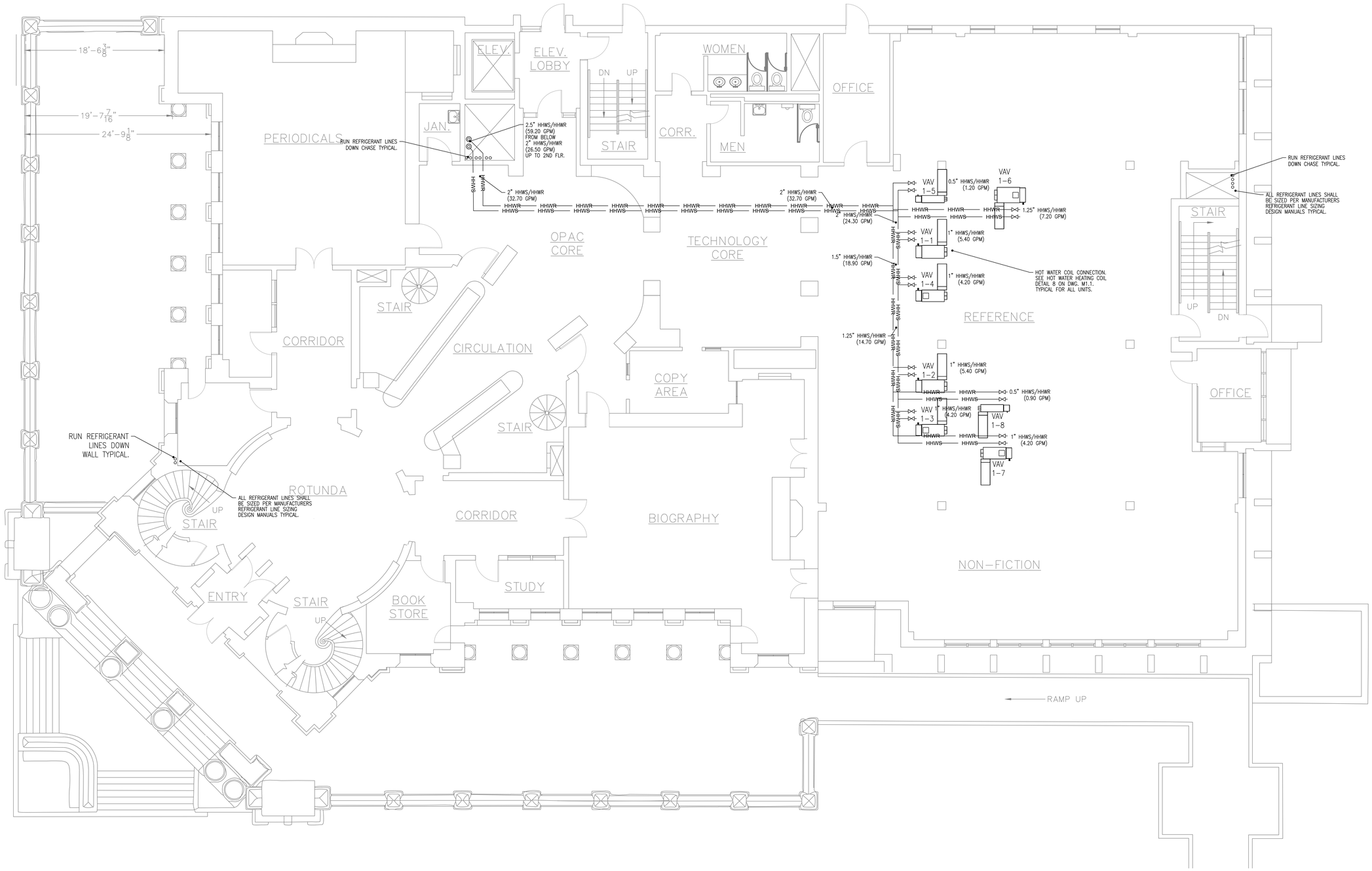

1 M3.1 FIRST FLOOR HOT WATER & A/C PIPING PLAN

3/16" = 1'-0"

HANDLEY LIBRARY

100 WEST PICCADILLY STREET
WINCHESTER, VA 22601

PAINTER-LEWIS P.L.C.
817 CEDAR CREEK GRADE
SUITE 120
WINCHESTER, VA. 22601
t: (540) 662-5792
f: (540) 662-5793
office@painterlewis.com

COMFORT DESIGN, INC.
620 PENNSYLVANIA AVENUE
WINCHESTER, VA 22601
t: (540) 665-2846
f: (540) 665-0038

COMMONWEALTH OF VIRGINIA
JOSHUA L. CATLETT
No. 042501
03/26/19
PROFESSIONAL ENGINEER

SCALE: AS NOTED

DATE: 3/26/2019
PERMIT DOCUMENTS

REVISIONS: BASED ON

1	---	

DESCRIPTION:
PERMIT/CONSTRUCT. DOCUMENTS

SHEET:
M3.1

COPYRIGHT: AUG. 26, 2016

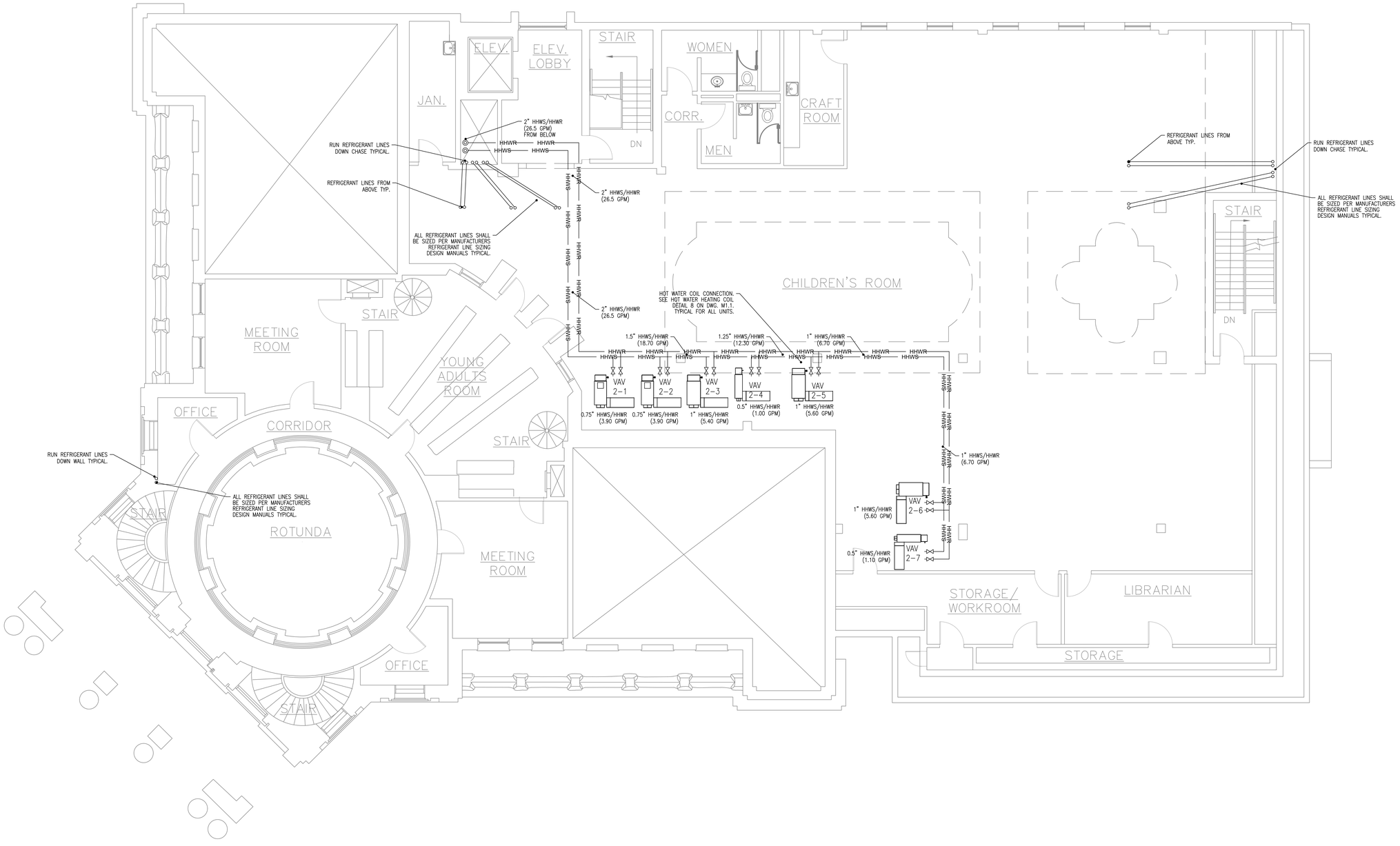

1 M3.2 SECOND FLOOR HOT WATER & A/C PIPING PLAN

3/16" = 1'-0"

HANDLEY LIBRARY

100 WEST PICCADILLY STREET
WINCHESTER, VA 22601

PAINTER-LEWIS P.L.C.
817 CEDAR CREEK GRADE
SUITE 120
WINCHESTER, VA. 22601
t: (540) 662-5792
f: (540) 662-5793
office@painterlewis.com

COMFORT DESIGN, INC.
620 PENNSYLVANIA AVENUE
WINCHESTER, VA 22601
t: (540) 665-2846
f: (540) 665-0038

COMMONWEALTH OF VIRGINIA
JOSHUA L. CATLETT
No. 042501
03/26/19
PROFESSIONAL ENGINEER

SCALE: AS NOTED

DATE: 3/26/2019
PERMIT DOCUMENTS

REVISIONS: BASED ON

1	---	

DESCRIPTION:
PERMIT/CONSTRUCT. DOCUMENTS

SHEET:
M3.2

COPYRIGHT: AUG. 26, 2016

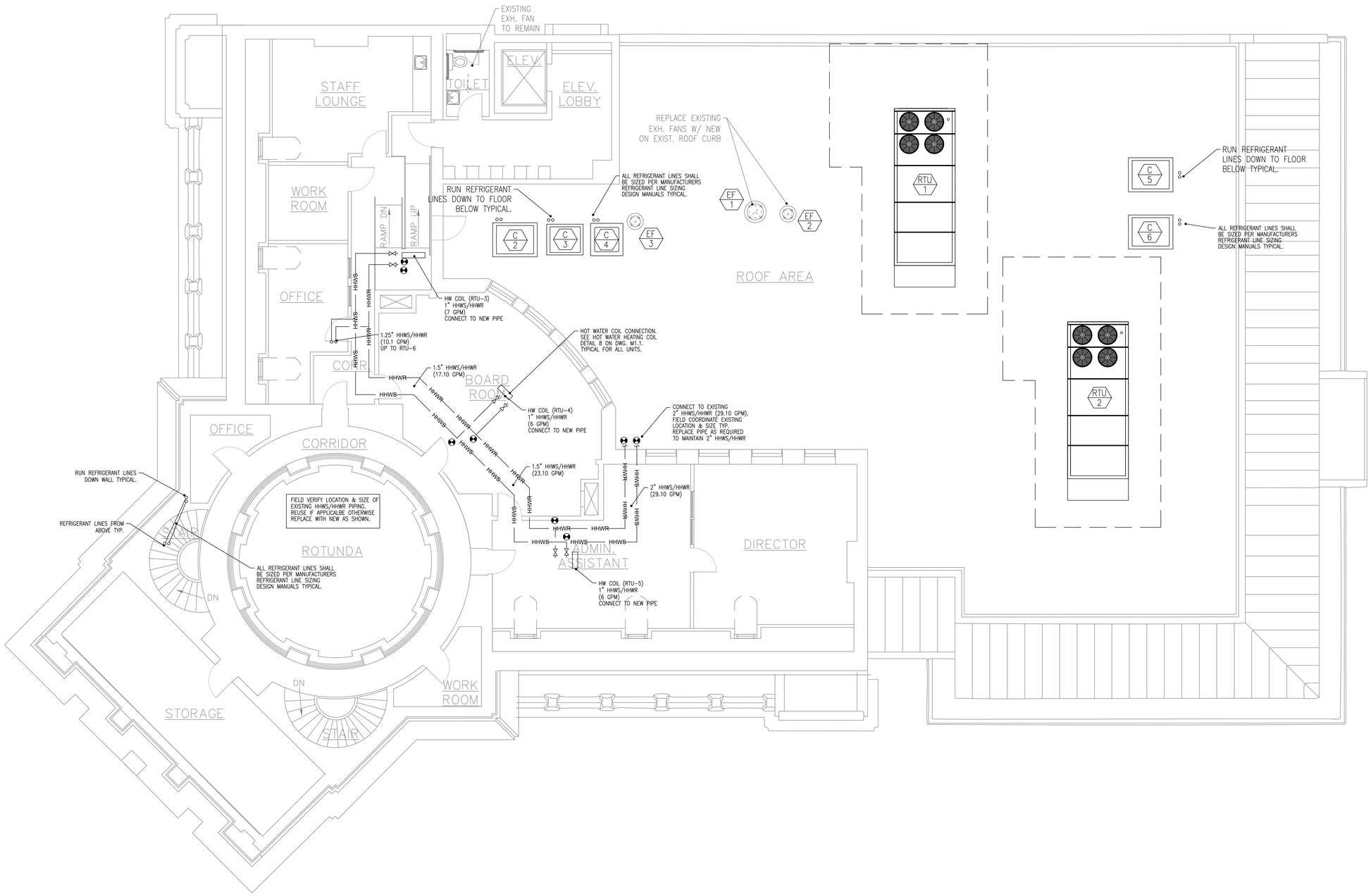

1 M3.3 THIRD FLOOR HOT WATER & A/C PIPING PLAN

3/16" = 1'-0"

HANDLEY LIBRARY

100 WEST PICCADILLY STREET
WINCHESTER, VA 22601

PAINTER-LEWIS P.L.C.
817 CEDAR CREEK GRADE
SUITE 120
WINCHESTER, VA. 22601
t: (540) 662-5792
f: (540) 662-5793
office@painterlewis.com

COMFORT DESIGN, INC.
620 PENNSYLVANIA AVENUE
WINCHESTER, VA 22601
t: (540) 665-2846
f: (540) 665-0038

COMMONWEALTH OF VIRGINIA
JOSHUA L. CATLETT
No. 042501
03/26/19
PROFESSIONAL ENGINEER

SCALE: AS NOTED

DATE: 3/26/2019
PERMIT DOCUMENTS

REVISIONS: BASED ON

1	---	

DESCRIPTION:
PERMIT/CONSTRUCT. DOCUMENTS

SHEET:
M3.3

COPYRIGHT: AUG. 26, 2016

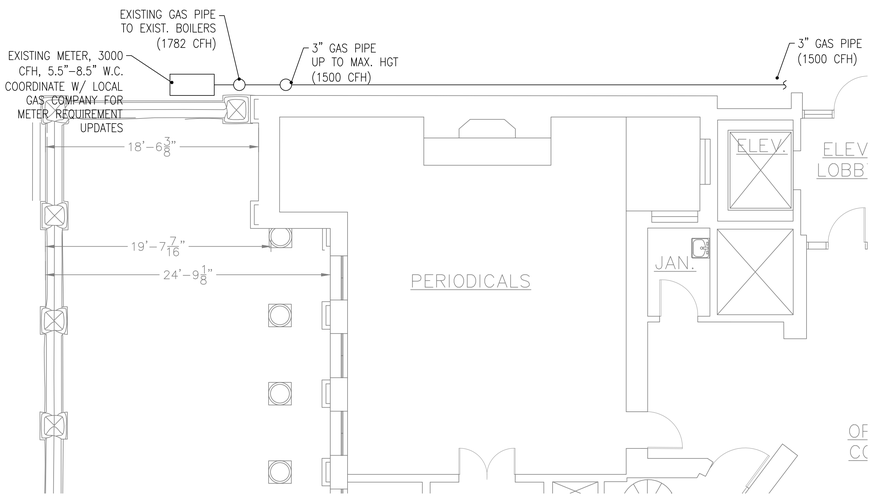

1 M4.0 1ST FLOOR GAS PIPING PLAN
3/16" = 1'–0"

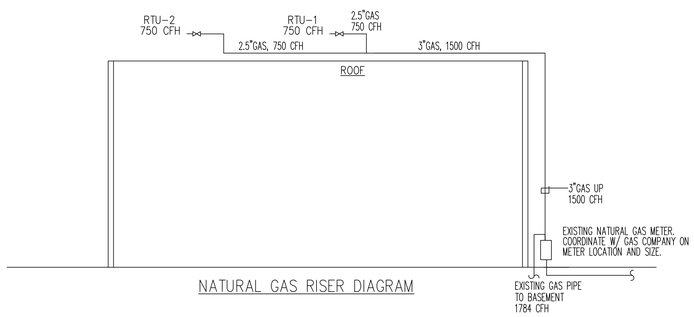

NATURAL GAS RISER DIAGRAM

PROPOSED NATURAL GAS LOADS				
MARK	UNIT DESCRIPTION	MFR OR EQUAL	MODEL	INPUT BTUH
RTU–1	ROOFTOP UNIT	TRANE	YHC600	750,000
RTU–2	ROOFTOP UNIT	TRANE	YHC480	750,000
SUMMARY TOTALS FOR GAS LOADS				1,500,000
				1,500 CFH

NATURAL GAS PIPE SIZING BASED ON THE 2015 VIRGINIA FUEL GAS CODE TABLE 402.4, <2 PSI W/ 0.3" W.C. PRESSURE DROP, GAS = 0.60 SPECIFIC GRAVITY, SCHEDULE 40 PIPE, AND 175' LENGTH. (1000 BTUH = 1 CFH)

*ALL GAS PIPING SHALL BE LABELED PER CODE.

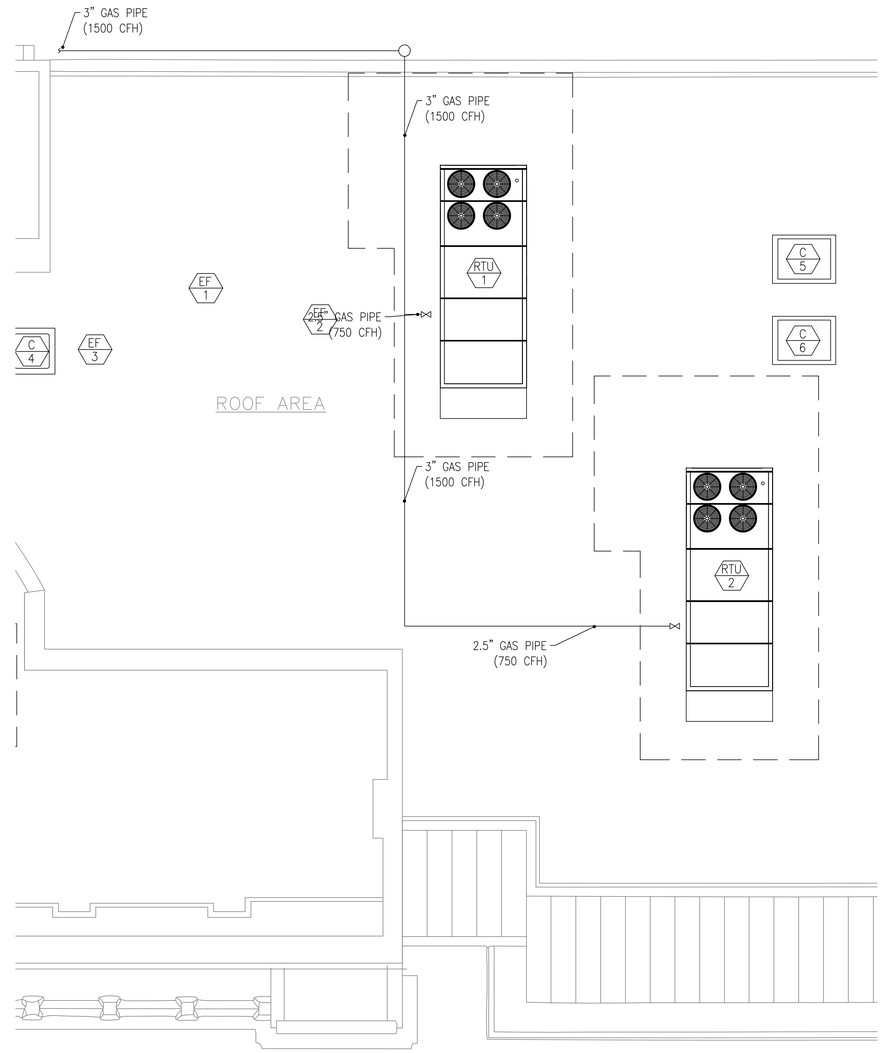

1 M4.0 ROOF GAS PIPING PLAN
3/16" = 1'–0"

HANDLEY LIBRARY

100 WEST PICCADILLY STREET
WINCHESTER, VA 22601

PAINTER-LEWIS P.L.C.
817 CEDAR CREEK GRADE
SUITE 120
WINCHESTER, VA. 22601
t: (540) 662-5792
f: (540) 662-5793
office@painterlewis.com

COMFORT DESIGN, INC.
620 PENNSYLVANIA AVENUE
WINCHESTER, VA 22601
t: (540) 665-2846
f: (540) 665-0038

COMMONWEALTH OF VIRGINIA
JOSHUA L. CATLETT
No. 042501
03/26/19
PROFESSIONAL ENGINEER

SCALE: AS NOTED

DATE: 3/26/2019
PERMIT DOCUMENTS

REVISIONS: BASED ON

1	---	

DESCRIPTION:
PERMIT/CONSTRUCT. DOCUMENTS

SHEET:
M4.0

COPYRIGHT: AUG. 26, 2016

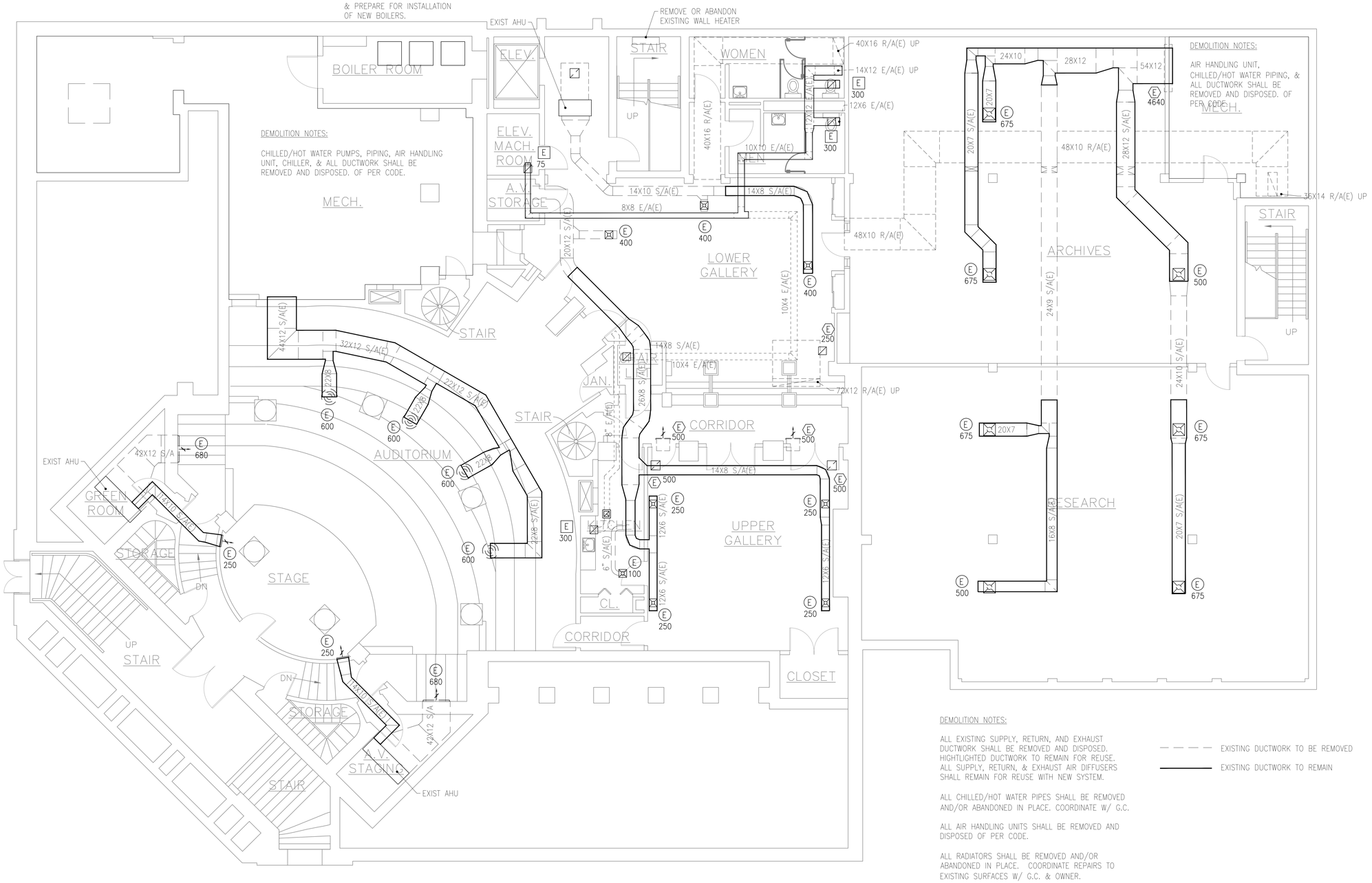

DEMOLITION NOTES:

ALL EXISTING SUPPLY, RETURN, AND EXHAUST DUCTWORK SHALL BE REMOVED AND DISPOSED. HIGHTLIGHTED DUCTWORK TO REMAIN FOR REUSE. ALL SUPPLY, RETURN, & EXHAUST AIR DIFFUSERS SHALL REMAIN FOR REUSE WITH NEW SYSTEM.

ALL CHILLED/HOT WATER PIPES SHALL BE REMOVED AND/OR ABANDONED IN PLACE. COORDINATE W/ G.C.

ALL AIR HANDLING UNITS SHALL BE REMOVED AND DISPOSED OF PER CODE.

ALL RADIATORS SHALL BE REMOVED AND/OR ABANDONED IN PLACE. COORDINATE REPAIRS TO EXISTING SURFACES W/ G.C. & OWNER.

EXISTING DUCTWORK TO BE REMOVED

EXISTING DUCTWORK TO REMAIN

1 / MD1.0 LOWER LEVEL MECHANICAL DEMO PLAN

3/16" = 1'-0"

HANDLEY LIBRARY

100 WEST PICCADILLY STREET
WINCHESTER, VA 22601

PAINTER-LEWIS P.L.C.
817 CEDAR CREEK GRADE
SUITE 120
WINCHESTER, VA. 22601
t: (540) 662-5792
f: (540) 662-5793
office@painterlewis.com

COMFORT DESIGN, INC.
620 PENNSYLVANIA AVENUE
WINCHESTER, VA 22601
t: (540) 665-2846
f: (540) 665-0038

COMMONWEALTH OF VIRGINIA
JOSHUA L. CATLETT
No. 042501
03/26/19
PROFESSIONAL ENGINEER

SCALE: AS NOTED

DATE: 3/26/2019
PERMIT DOCUMENTS

REVISIONS: BASED ON

1	---	

DESCRIPTION: PERMIT/CONSTRUCT. DOCUMENTS

SHEET: MD1.0

COPYRIGHT: AUG. 26, 2016

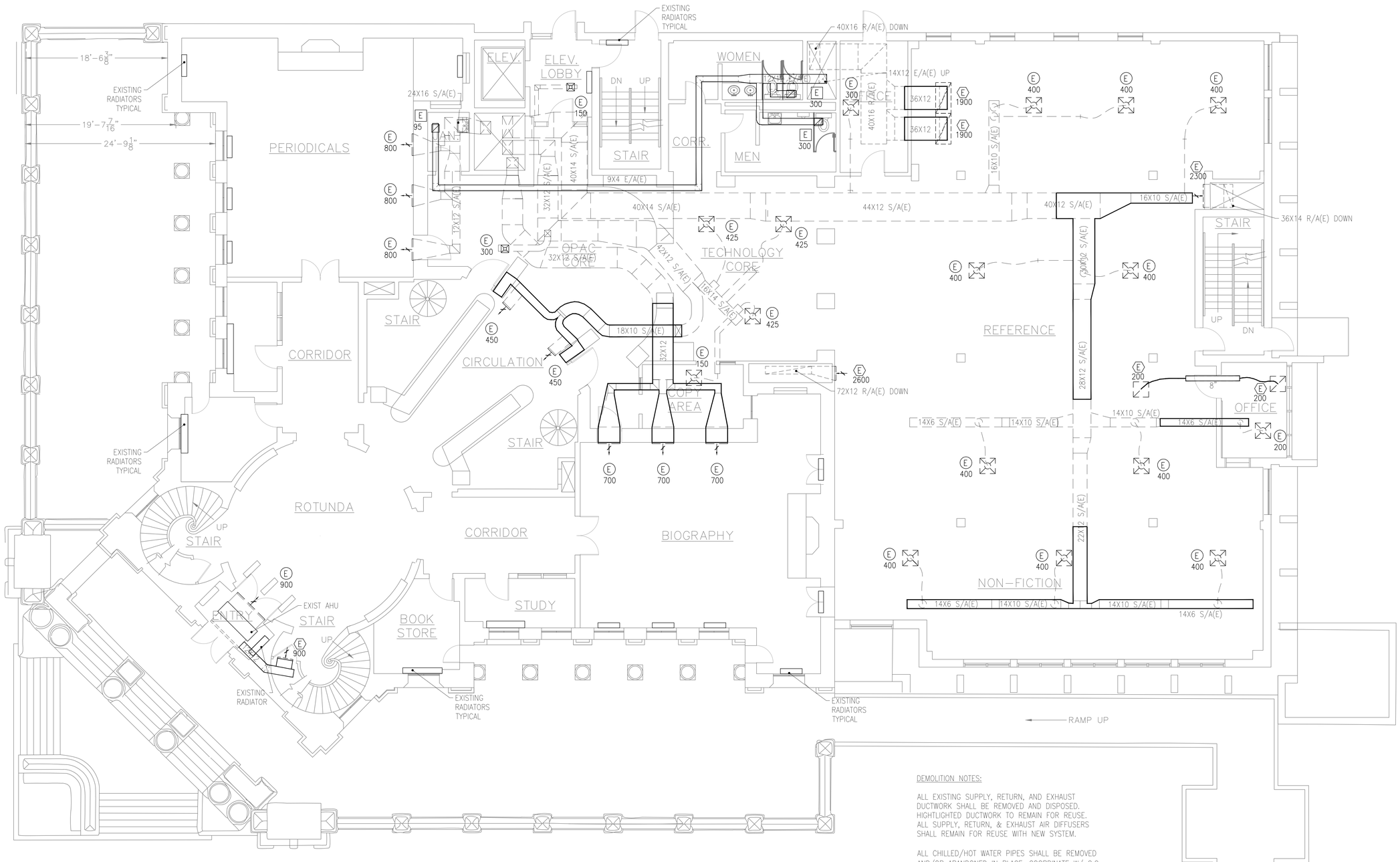

EXISTING DUCTWORK TO BE REMOVED

EXISTING DUCTWORK TO REMAIN

DEMOLITION NOTES:

ALL EXISTING SUPPLY, RETURN, AND EXHAUST DUCTWORK SHALL BE REMOVED AND DISPOSED. HIGHTLIGHTED DUCTWORK TO REMAIN FOR REUSE. ALL SUPPLY, RETURN, & EXHAUST AIR DIFFUSERS SHALL REMAIN FOR REUSE WITH NEW SYSTEM.

ALL CHILLED/HOT WATER PIPES SHALL BE REMOVED AND/OR ABANDONED IN PLACE. COORDINATE W/ G.C.

ALL AIR HANDLING UNITS SHALL BE REMOVED AND DISPOSED OF PER CODE.

ALL RADIATORS SHALL BE REMOVED AND/OR ABANDONED IN PLACE. COORDINATE REPAIRS TO EXISTING SURFACES W/ G.C. & OWNER.

1 MD1.1 FIRST FLOOR MECHANICAL DEMO PLAN

3/16" = 1'-0"

HANDLEY LIBRARY

100 WEST PICCADILLY STREET
WINCHESTER, VA 22601

PAINTER-LEWIS P.L.C.
817 CEDAR CREEK GRADE
SUITE 120
WINCHESTER, VA. 22601
t: (540) 662-5792
f: (540) 662-5793
office@painterlewis.com

COMFORT DESIGN, INC.
620 PENNSYLVANIA AVENUE
WINCHESTER, VA 22601
t: (540) 665-2846
f: (540) 665-0038

COMMONWEALTH OF VIRGINIA
JOSHUA L. CATLETT
No. 042501
03/26/19
PROFESSIONAL ENGINEER

SCALE: AS NOTED

DATE: 3/26/2019
PERMIT DOCUMENTS

REVISIONS: BASED ON

1	--	

DESCRIPTION: PERMIT/CONSTRUCT. DOCUMENTS

SHEET: MD1.1

COPYRIGHT: AUG. 26, 2016

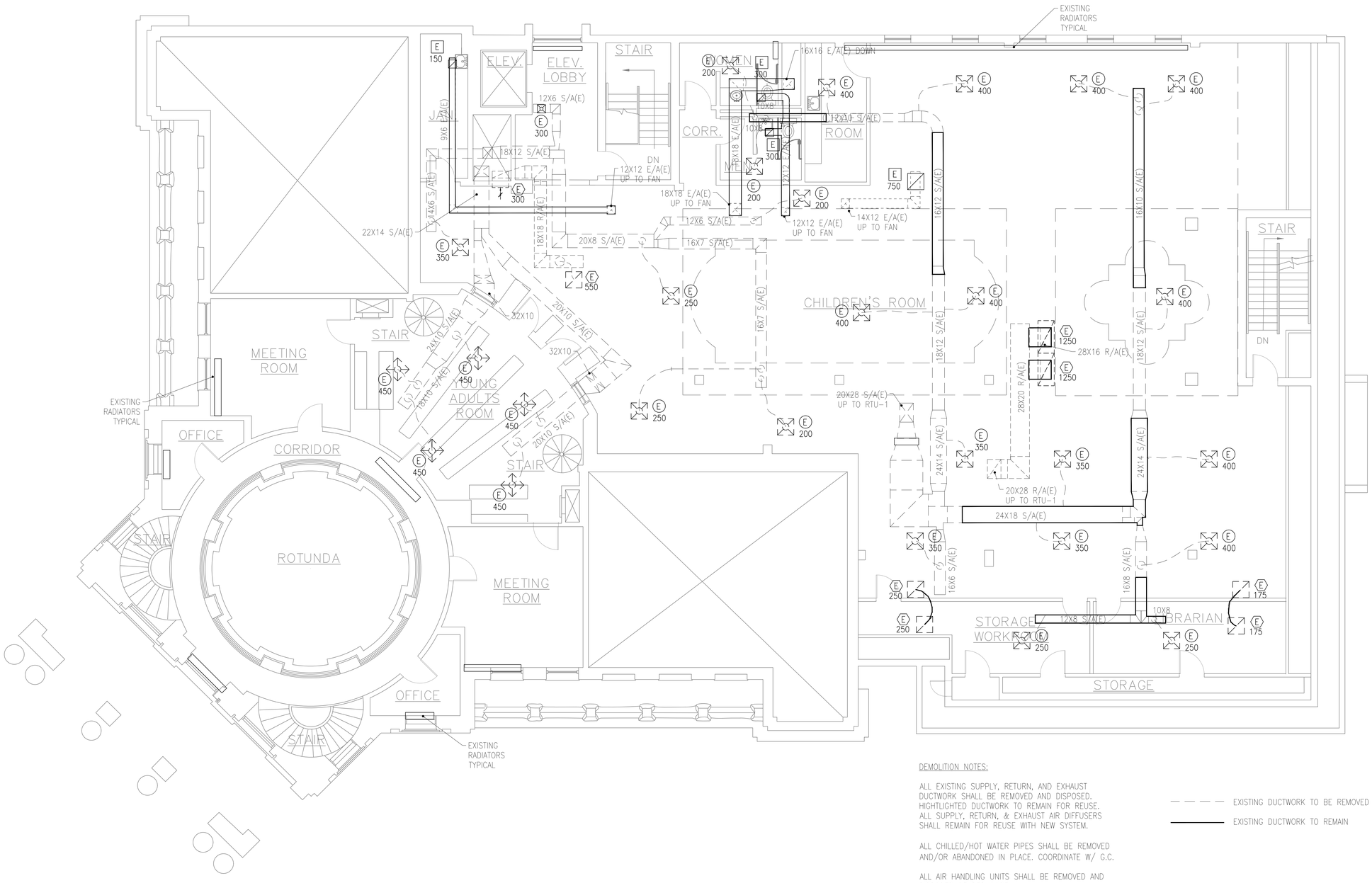

DEMOLITION NOTES:

ALL EXISTING SUPPLY, RETURN, AND EXHAUST DUCTWORK SHALL BE REMOVED AND DISPOSED. HIGHTLIGHTED DUCTWORK TO REMAIN FOR REUSE. ALL SUPPLY, RETURN, & EXHAUST AIR DIFFUSERS SHALL REMAIN FOR REUSE WITH NEW SYSTEM.

ALL CHILLED/HOT WATER PIPES SHALL BE REMOVED AND/OR ABANDONED IN PLACE. COORDINATE W/ G.C.

ALL AIR HANDLING UNITS SHALL BE REMOVED AND DISPOSED OF PER CODE.

ALL RADIATORS SHALL BE REMOVED AND/OR ABANDONED IN PLACE. COORDINATE REPAIRS TO EXISTING SURFACES W/ G.C. & OWNER.

— — — — EXISTING DUCTWORK TO BE REMOVED

——— EXISTING DUCTWORK TO REMAIN

1 / MD1.2 SECOND FLOOR MECHANICAL DEMO PLAN

3/16" = 1'-0"

HANDLEY LIBRARY

100 WEST PICCADILLY STREET
WINCHESTER, VA 22601

PAINTER-LEWIS P.L.C.
817 CEDAR CREEK GRADE
SUITE 120
WINCHESTER, VA. 22601
t: (540) 662-5792
f: (540) 662-5793
office@painterlewis.com

COMFORT DESIGN, INC.
620 PENNSYLVANIA AVENUE
WINCHESTER, VA 22601
t: (540) 665-2846
f: (540) 665-0038

COMMONWEALTH OF VIRGINIA
JOSHUA L. CATLETT
No. 042501
03/26/19
PROFESSIONAL ENGINEER

SCALE: AS NOTED

DATE: 3/26/2019
PERMIT DOCUMENTS

REVISIONS: BASED ON

1	---	

DESCRIPTION:
PERMIT/CONSTRUCT. DOCUMENTS

SHEET:
MD1.2

COPYRIGHT: AUG. 26, 2016

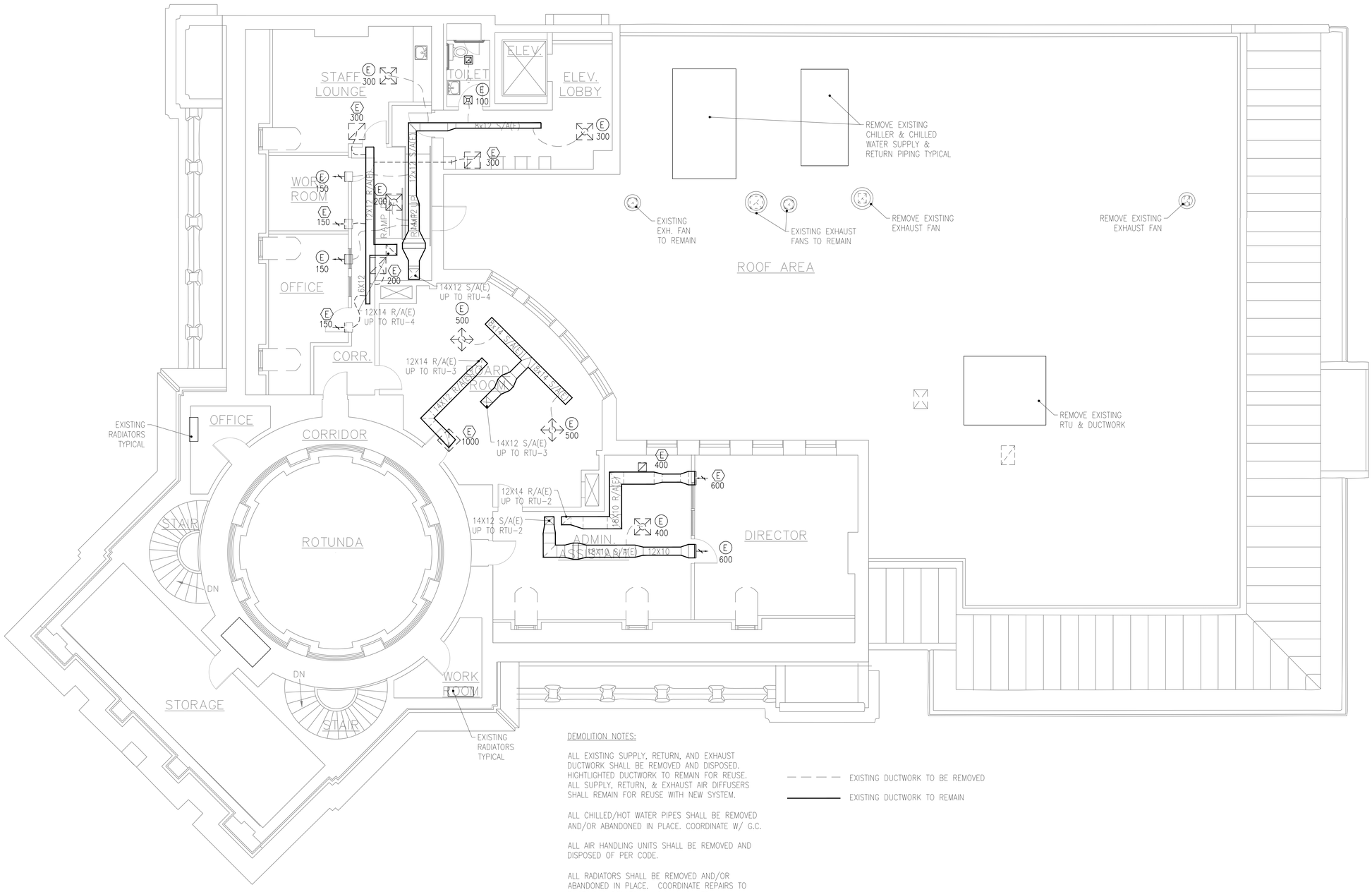

DEMOLITION NOTES:

ALL EXISTING SUPPLY, RETURN, AND EXHAUST DUCTWORK SHALL BE REMOVED AND DISPOSED. HIGHTLIGHTED DUCTWORK TO REMAIN FOR REUSE. ALL SUPPLY, RETURN, & EXHAUST AIR DIFFUSERS SHALL REMAIN FOR REUSE WITH NEW SYSTEM.

ALL CHILLED/HOT WATER PIPES SHALL BE REMOVED AND/OR ABANDONED IN PLACE. COORDINATE W/ G.C.

ALL AIR HANDLING UNITS SHALL BE REMOVED AND DISPOSED OF PER CODE.

ALL RADIATORS SHALL BE REMOVED AND/OR ABANDONED IN PLACE. COORDINATE REPAIRS TO EXISTING SURFACES W/ G.C. & OWNER.

— — — — EXISTING DUCTWORK TO BE REMOVED

———— EXISTING DUCTWORK TO REMAIN

1 MD1.3 THIRD FLOOR MECHANICAL DEMO PLAN

3/16" = 1'-0"

HANDLEY LIBRARY

100 WEST PICCADILLY STREET
WINCHESTER, VA 22601

PAINTER-LEWIS P.L.C.
817 CEDAR CREEK GRADE
SUITE 120
WINCHESTER, VA. 22601
t: (540) 662-5792
f: (540) 662-5793
office@painterlewis.com

COMFORT DESIGN, INC.
620 PENNSYLVANIA AVENUE
WINCHESTER, VA 22601
t: (540) 665-2846
f: (540) 665-0038

COMMONWEALTH OF VIRGINIA
JOSHUA L. CATLETT
No. 042501
03/26/19
PROFESSIONAL ENGINEER

SCALE: AS NOTED

DATE: 3/26/2019
PERMIT DOCUMENTS

REVISIONS: BASED ON

1	---	

DESCRIPTION:
PERMIT/CONSTRUCT. DOCUMENTS

SHEET:
MD1.3

COPYRIGHT: AUG. 26, 2016

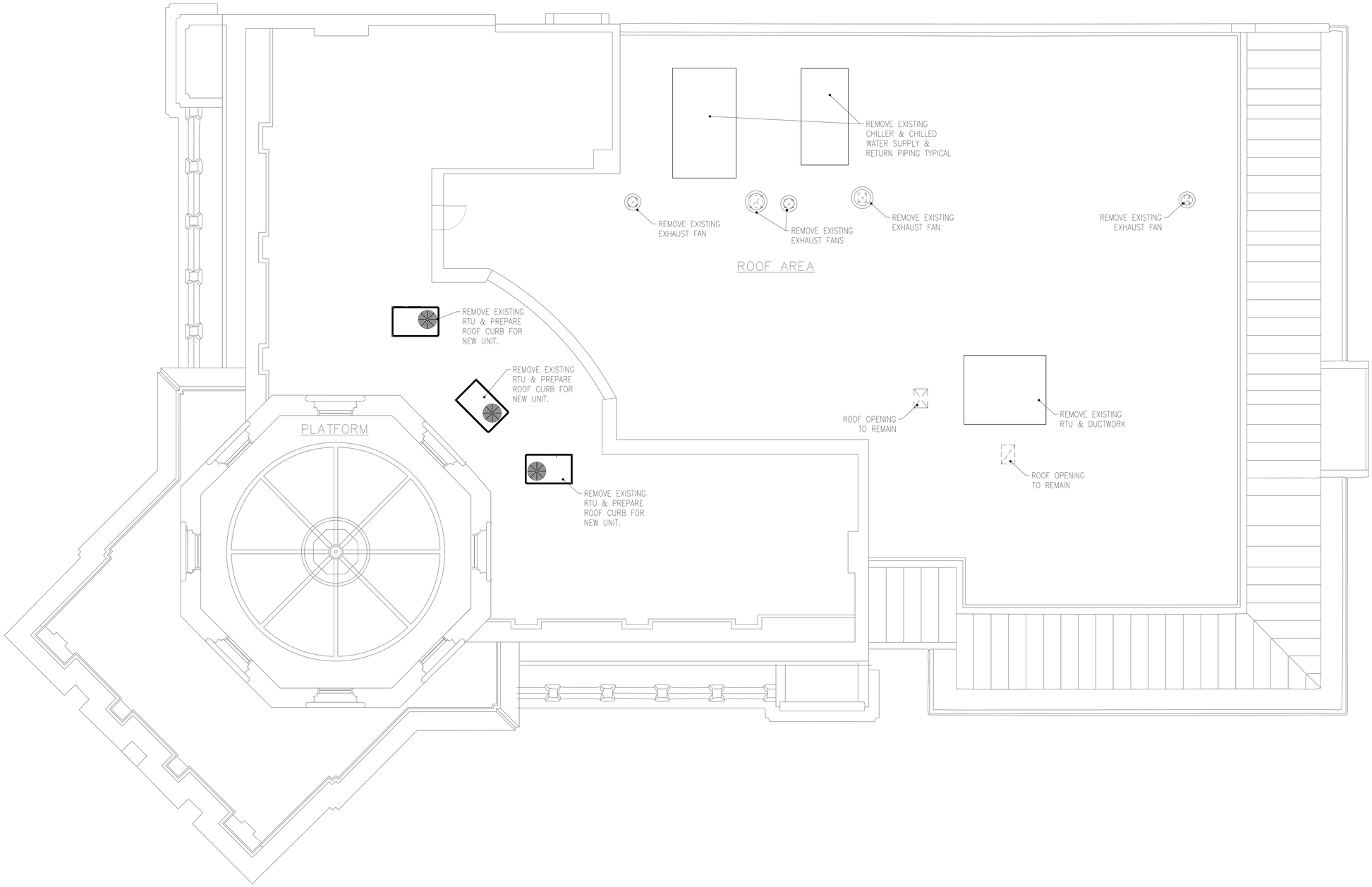

1 MD1.4 ROOF MECHANICAL DEMO PLAN

3/16" = 1'-0"

HANDLEY LIBRARY

100 WEST PICCADILLY STREET
WINCHESTER, VA 22601

PAINTER-LEWIS P.L.C.
817 CEDAR CREEK GRADE
SUITE 120
WINCHESTER, VA. 22601
t: (540) 662-5792
f: (540) 662-5793
office@painterlewis.com

COMFORT DESIGN, INC.
620 PENNSYLVANIA AVENUE
WINCHESTER, VA 22601
t: (540) 665-2846
f: (540) 665-0038

COMMONWEALTH OF VIRGINIA
JOSHUA L. CATLETT
No. 042501
03/26/19
PROFESSIONAL ENGINEER

SCALE: AS NOTED

DATE: 3/26/2019
PERMIT DOCUMENTS

REVISIONS: BASED ON

1	---	

DESCRIPTION:
PERMIT/CONSTRUCT. DOCUMENTS

SHEET:
MD1.4