COLORS SELECTED:

BUILDING COLOR: CLASSIC BEIGE
WINDOW AND DOOR TRIM COLOR: CONTINENTAL BROWN
EXTERIOR DOOR OTHER THAN BURN DOORS: BRONZE
NOTE: Burn room doors and all shutters are Galvanized Steel

Steven Westra

Digitally signed by Steven Westra
DN: C=US, E=swestra@firefacilities.com, O="Fire Facilities, Inc.", CN=Steven Westra
Date: 2019.01.18 08:42:39-06'00'

DRAWING INDEX

PAGE 01 – FLOOR PLANS
PAGE 02 – ELEVATIONS
PAGE 03 – ANCHOR BOLT PLAN
PAGE 04 – STRUCTURAL FRAMING PLAN
PAGE 05 – STRUCTURAL ELEVATIONS
PAGE 06 – STRUCTURAL ELEVATIONS CONT.
PAGE 07 – STRUCTURAL SECTIONS
PAGE 08 – JOIST PLAN
PAGE 09 – STUD WALL ELEVATIONS AND DETAILS
PAGE 10 – STUD WALL ELEVATIONS AND DETAILS CONT.
PAGE 11 – ANNEX BURN ROOM #1 PLAN AND DETAILS
PAGE 12 – BURN ROOM #2 PLAN AND DETAILS
PAGE 13 – BURN ROOM #3 PLAN AND DETAILS
PAGE 14 – BURN ROOM #4 PLAN AND DETAILS
PAGE 15 – SPOT BURN PLAN AND DETAILS
PAGE 16 – WESTEC SYSTEM DETAILS
PAGE 17 – WESTEC SYSTEM DETAILS CONT.
PAGE 18 – MISC. DETAILS
PAGE 19 – MISC. DETAILS CONT.
PAGE 20 – MISC. DETAILS CONT.
PAGE 21 – MISC. DETAILS CONT.
PAGE 22 – MISC. DETAILS CONT.
PAGE 23 – PARAPET DETAILS
PAGE 24 – SLAM LOCK DETAILS
PAGE 25 – STAIR DETAILS

GENERAL DATA

Occupancy Group: Unoccupied fire training simulator/nonbuilding structure
Construction Type: Type II–B
Area: 2390 sq. ft.
Height: 29 ft
Stories: 2.5
Allowable Area: N/A
Fire Sprinkler: N/A

DESIGN LOADS:

FLOOR LIVE LOAD: 100 PSF
ROOF LIVE LOAD: 100 PSF
WIND LOAD: 105 MPH; EXP C
SEISMIC DESIGN CAT: A
SITE CLASS: D
DESIGN CODE: IBC 2015 AND NFPA 1402

NFPA 1402 is the Guide to Building Fire Service Training Centers. Chapter 1.3 states the following "Some of the structures in a fire training facility are designed to be training props and are not required to meet all of the requirements of the jurisdiction's building codes. However, the structural integrity of all props must be assured."

MATERIAL SPECIFICATIONS:

W SHAPES: ASTM A992 (Fy = 50 ksi).
HSS: ASTM A500 (GRADE B).
PLATES: ASTM A36 OR ASTM A572 (GRADE 50).
ANGLES: ASTM A36.
C SHAPES: ASTM A36.
BOLTS: ASTM A325N.
LIGHT GUAGE STEEL: ASTM A653 OR ASTM A924.
WELDS Field Welding Not Required; Shop Electrodes E71T-1

SPECIAL INSPECTIONS
(cont. reports required for submittal to city inspector):

1. HIGH STRENGTH BOLTS
2. REINF. CONC W/ F'c > 2.5ksi
3. WELDING – NO FIELD WELDING REQUIRED

INSPECTIONS FOR REINF. CONCRETE SHALL TAKE PLACE PRIOR/DURING FOUNDATION CONSTRUCTION AND INSPECTIONS FOR HIGH STRENGTH BOLTS DURING SUPERSTRUCTURE PLACEMENT.

REVISIONS	by

COMMONWEALTH OF VIRGINIA
STEVEN P. WESTRA
Lic. No. 035397
JAN 18 2019
PROFESSIONAL ENGINEER

THIS DRAWING AND ALL PARTS THEREOF IS THE EXCLUSIVE PROPERTY OF FIRE FACILITIES, INC., 314 WILBURN ROAD, SUN PRAIRIE, WI 53590 OFFICE: (608) 327-4100 FAX (608) 834-1843 AND MAY NOT BE REPRODUCED IN WHOLE OR PART WITHOUT WRITTEN PERMISSION.

FIRE FACILITIES
STEEL FIRE TRAINING TOWERS
FIRE FACILITIES, INC.
314 WILBURN ROAD, SUN PRAIRIE, WI 53590
OFFICE: (608) 327-4100 FAX: (608) 834-1843
TOLL FREE: (800) 929-3728 TOLL FREE FAX: (866) 639-7012
WWW.FIREFACILITIES.COM, INFO@FIREFACILITIES.COM

Job Description:
WESCO MODEL WH-2
CUSTOM
WINCHESTER, VA

Sheet Title:
TITLE PAGE

Date:	JANUARY 4, 2019
Drawn by:	KAH
Checked by:	SPW
Scale:	SHOWN
Order No.	FTE-733/#208929
Sheet No.	00 of 25

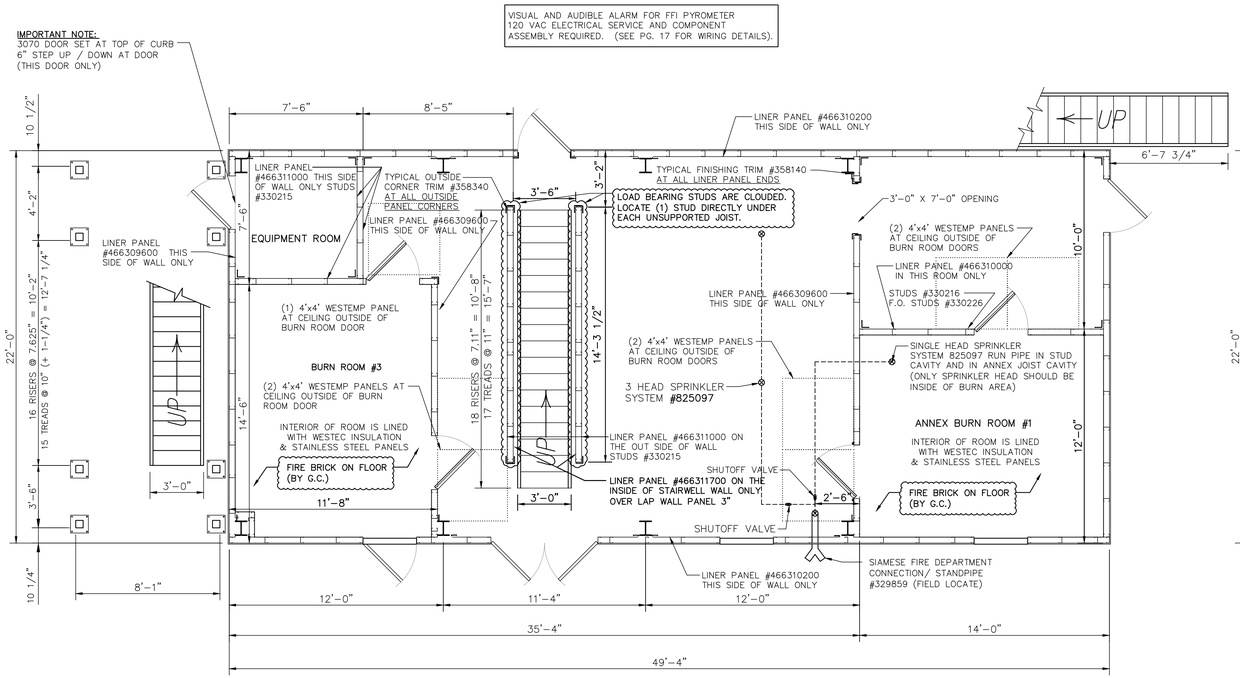

FIRST FLOOR PLAN

SCALE: 1/4" = 1'-0"

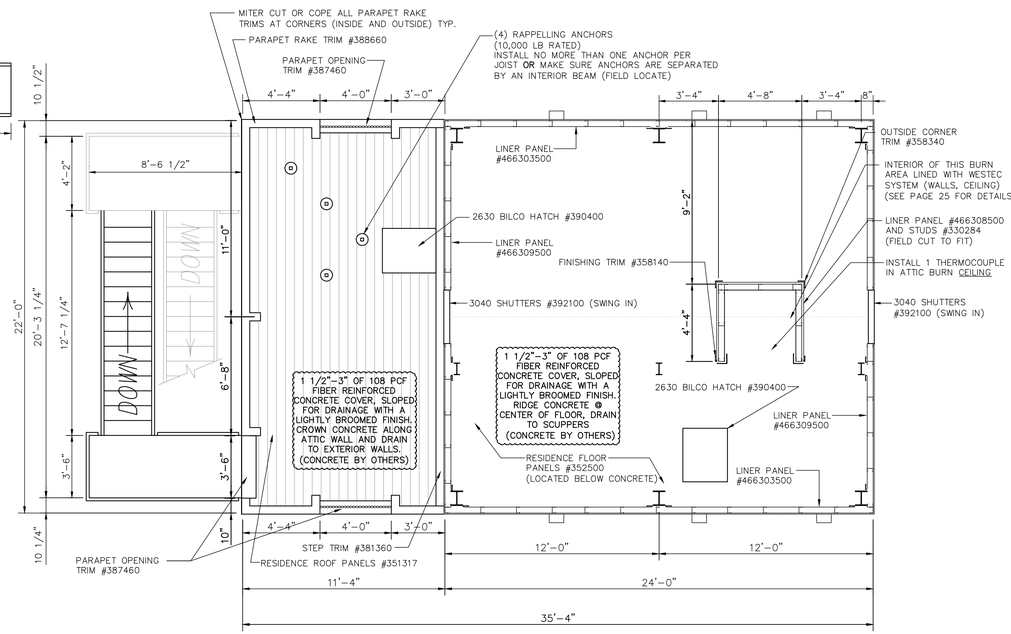

ATTIC FLOOR PLAN

SCALE: 1/4" = 1'-0"

NOTE: ALL SHUTTERS IN TOWER SWING IN (#392100), UNLESS OTHERWISE SHOWN
ALL SHUTTERS IN BURN ROOM SWING OUT (#392300), UNLESS OTHERWISE SHOWN

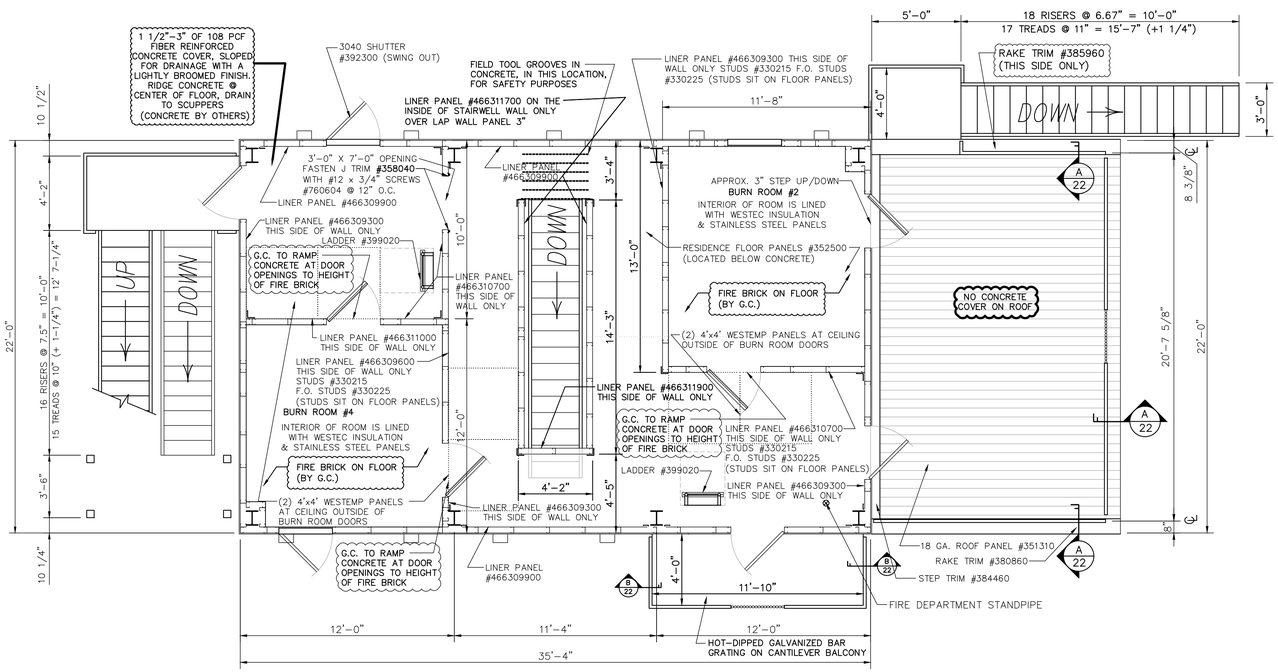

SECOND FLOOR PLAN

SCALE: 1/4" = 1'-0"

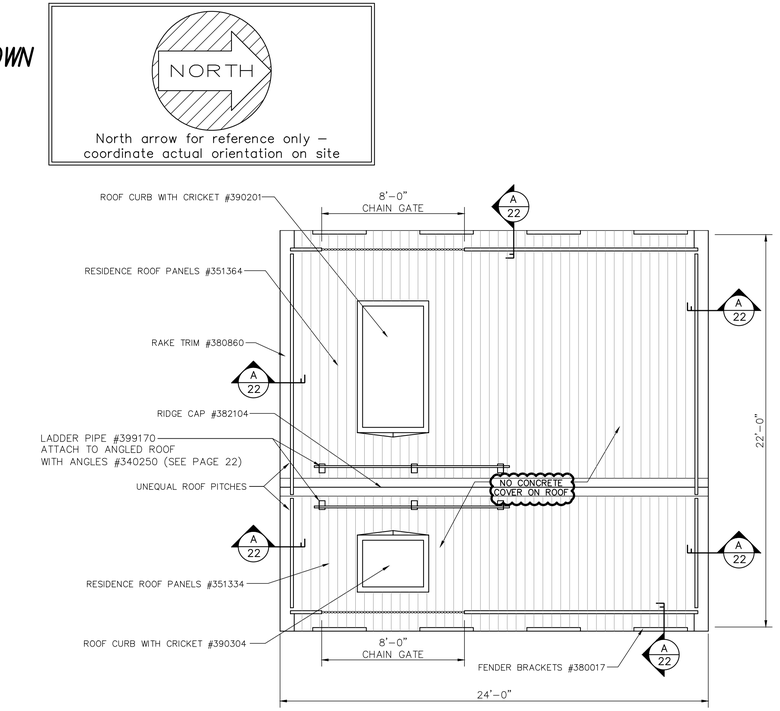

RESIDENCE ROOF PLAN

SCALE: 1/4" = 1'-0"

REVISIONS	by

THIS DRAWING AND ALL PARTS THEREOF IS THE EXCLUSIVE PROPERTY OF FIRE FACILITIES, INC., 314 WILBURN ROAD, SUN PRAIRIE, WI 53590 OFFICE: (608) 327-4100 FAX (608) 834-1843 AND MAY NOT BE REPRODUCED IN WHOLE OR PART WITHOUT WRITTEN PERMISSION.

FIRE FACILITIES
STEEL FIRE TRAINING TOWERS
FIRE FACILITIES, INC.
314 WILBURN ROAD, SUN PRAIRIE, WI 53590
OFFICE: (608) 327-4100 FAX: (608) 834-1843
TOLL FREE: (800) 929-3726 TOLL FREE FAX: (866) 639-7012
WWW.FIREFACILITIES.COM; INFO@ FIREFACILITIES.COM

Job Description: WESCO MODEL WH-2 CUSTOM WINCHESTER, VA

Sheet Title: FLOOR PLANS

Date:	JANUARY 4, 2019
Drawn by:	KAH
Checked by:	SPW
Scale:	SHOWN
Order No.	FTE-733/#208929
Sheet No.	01 of 25

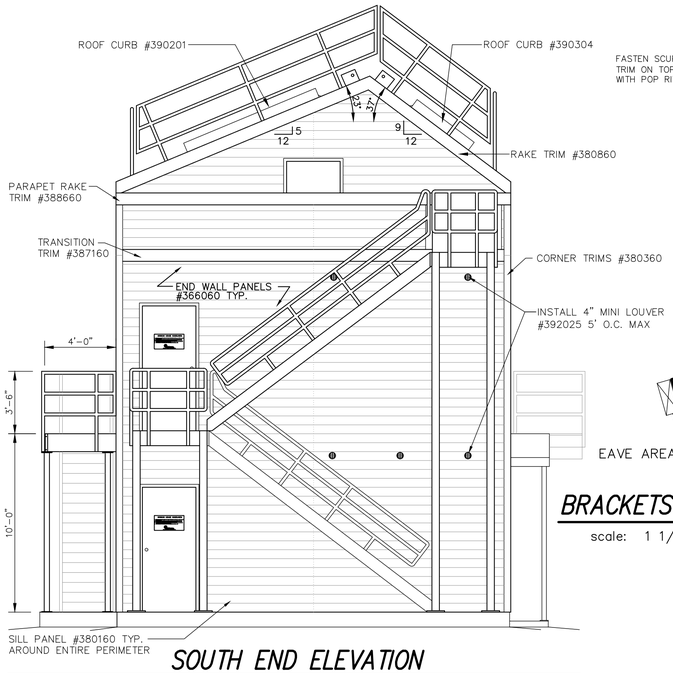

SOUTH END ELEVATION

SCALE: 1/4" = 1'-0"

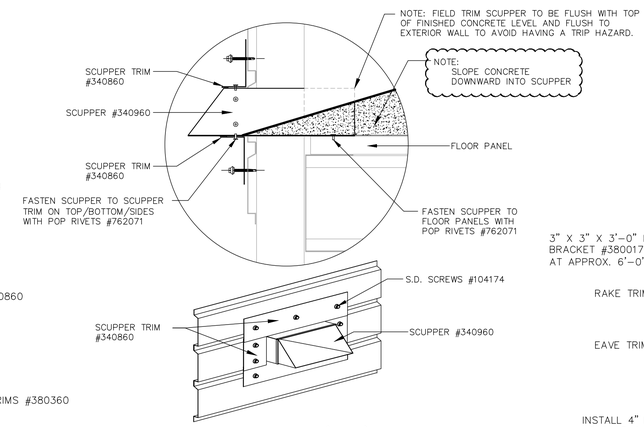

SCUPPER DETAILS (X 17)

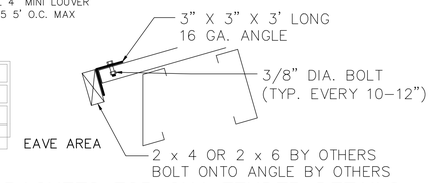

BRACKETS FOR 2X4 FENDER DETAILS

scale: 1 1/2" = 1'-0"

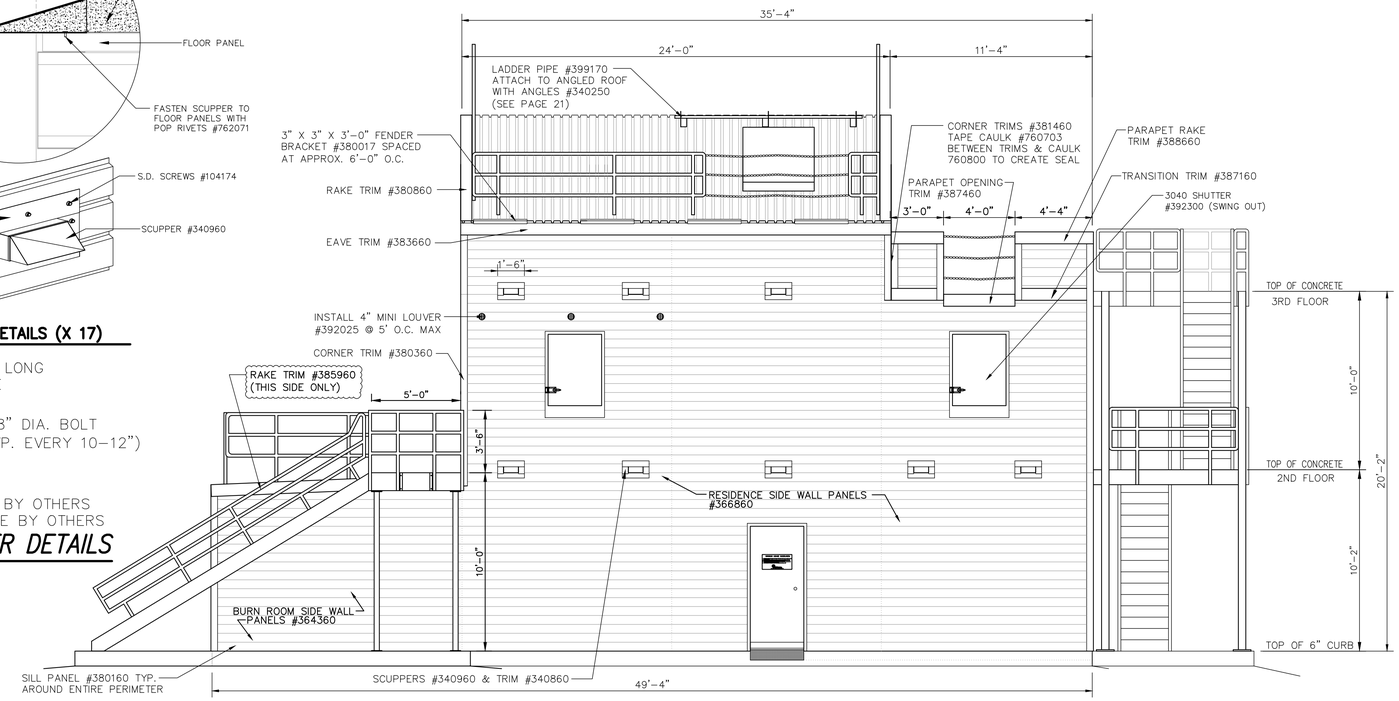

WEST SIDE ELEVATION

SCALE: 1/4" = 1'-0"

NOTES:

1. WALL PANEL MUST BE FIELD CUT AROUND FRAMED OPENINGS
2. TRIMS ARE IN STANDARD 10' LENGTHS SOME FIELD CUTTING OF TRIMS IS REQUIRED

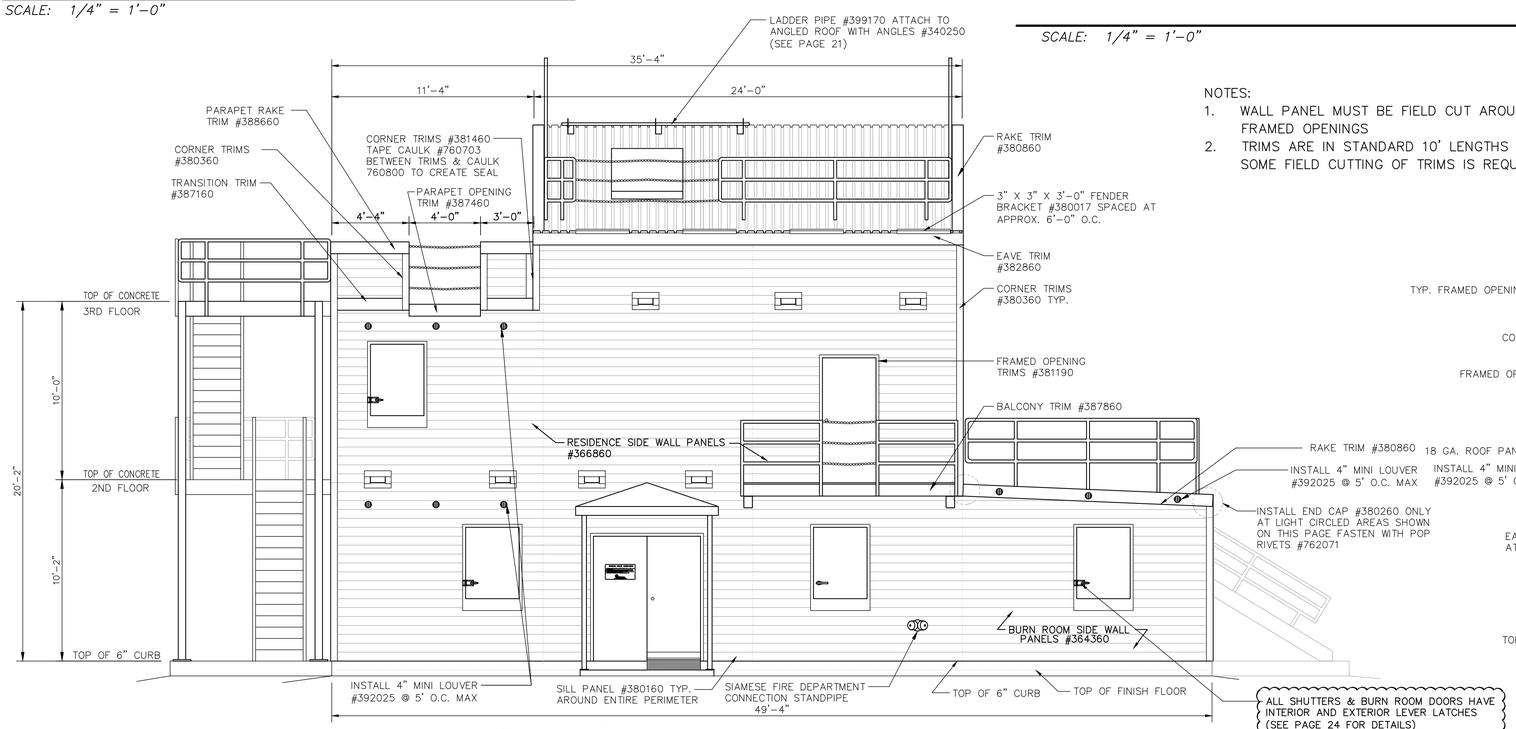

EAST SIDE ELEVATION

SCALE: 1/4" = 1'-0"

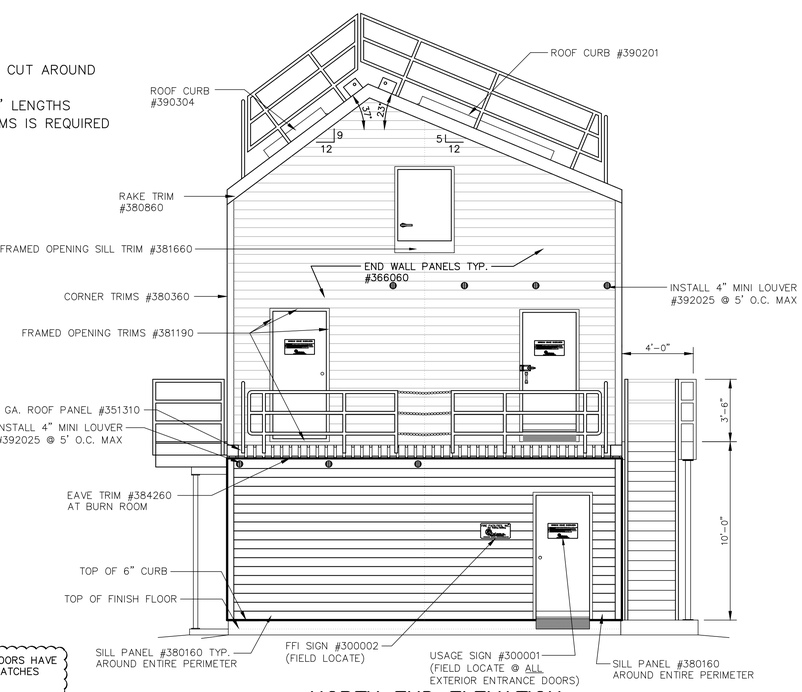

NORTH END ELEVATION

SCALE: 1/4" = 1'-0"

REVISIONS	by

COMMONWEALTH OF VIRGINIA
STEVEN P. WESTRA
Lic. No. 03397
JAN 18 2019
PROFESSIONAL ENGINEER

THIS DRAWING AND ALL PARTS THEREOF IS THE EXCLUSIVE PROPERTY OF FIRE FACILITIES, INC., 314 WILBURN ROAD, SUN PRAIRIE, WI 53590 OFFICE: (608) 327-4100 FAX (608) 834-1843 AND MAY NOT BE REPRODUCED IN WHOLE OR PART WITHOUT WRITTEN PERMISSION.

FIRE FACILITIES
STEEL FIRE TRAINING TOWERS
FIRE FACILITIES, INC.
314 WILBURN ROAD, SUN PRAIRIE, WI 53590
OFFICE: (608) 327-4100 FAX: (608) 834-1843
TOLL FREE: (800) 929-3726 TOLL FREE FAX: (866) 639-7012
WWW.FIREFACILITIES.COM; INFO@ FIREFACILITIES.COM

Job Description: WESCO MODEL WH-2 CUSTOM WINCHESTER, VA

Sheet Title: ELEVATIONS

Date:	JANUARY 4, 2019
Drawn by:	KAH
Checked by:	SPW
Scale:	SHOWN
Order No.	FTE-733/#208929
Sheet No.	02 of 25

COLUMN REACTIONS

COLUMN	HORIZONTAL (ANY DIRECTION)	VERTICAL (DOWNWARD)	VERTICAL (UPLIFT)
A–1	3 KIPS	33 KIPS	3 KIPS
B–1	6 KIPS	34 KIPS	11 KIPS
A–2	5 KIPS	75 KIPS	3 KIPS
B–2	6 KIPS	75 KIPS	8 KIPS
A–3, B–3	6 KIPS	93 KIPS	3 KIPS
A–4, B–4	3 KIPS	48 KIPS	3 KIPS

DESIGN REACTIONS SHOWN:
1. PER IBC 2015 AND LRFD LOAD COMBINATIONS
2. WIND CRITERIA: 105 MPH, EXP C; RISK CAT I
3. SEISMIC CRITERIA: SDC A; SITE CLASS D

1. ALL COLUMNS, FIRE ESCAPE PADS AND STUD WALLS ARE SET AT TOP OF CURB (FINISHED FLOOR IS 6" BELOW TOP OF CURB).
2. ALL PADS OUTSIDE OF EXTERIOR DOORS SHOULD BE SET AT FINISHED FLOOR (IF APPLICABLE).
3. ALL DOOR OPENINGS THAT ARE DIMENSIONED SHOULD BE HELD EXACT (DOOR LOCATIONS NOT DIMENSIONED CAN BE FIELD LOCATED).

NOTE:

EXCLUDES ANY AND ALL PREPARATIONS INVOLVED IN PROVIDING SUITABLE CONCRETE PADS AND/OR FOUNDATIONS

ALSO EXCLUDES ANY ANCHORS REQUIRED TO SECURE THE BUILDING TO THE FOUNDATION.

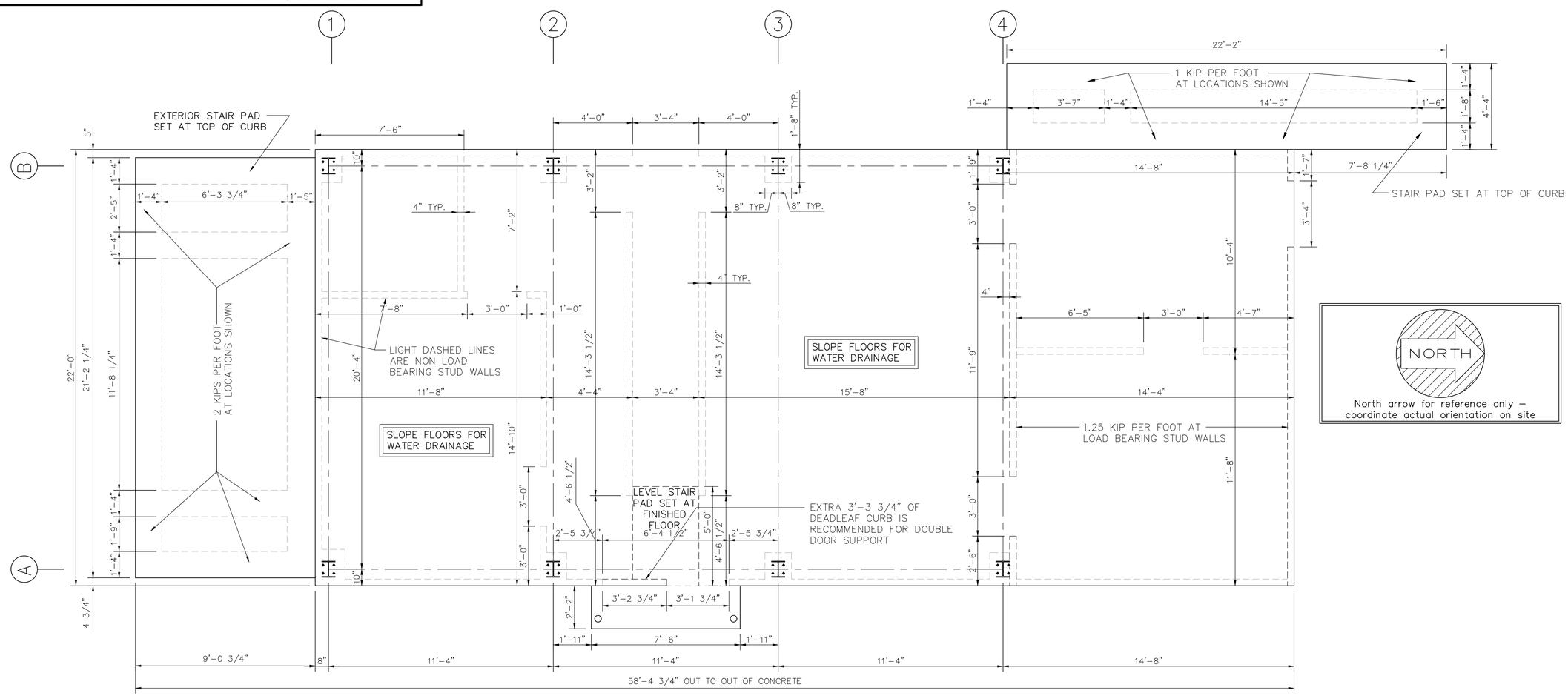

ANCHOR BOLT PLAN

SCALE: 3/8" = 1'–0"

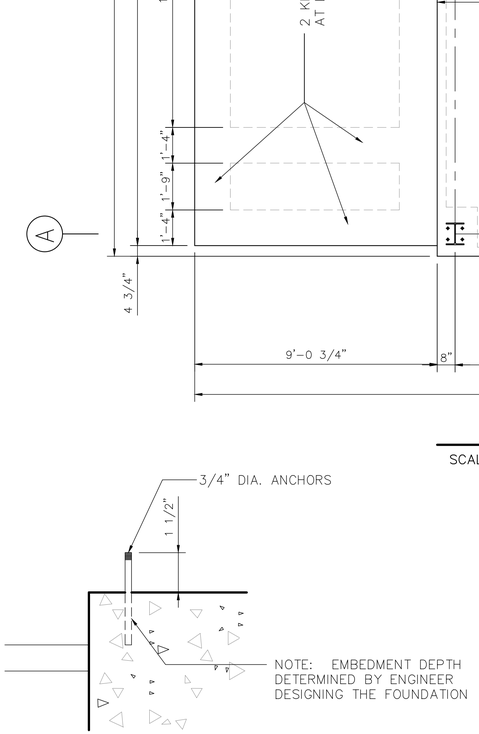

ANCHOR BOLT PROJECTION DETAIL

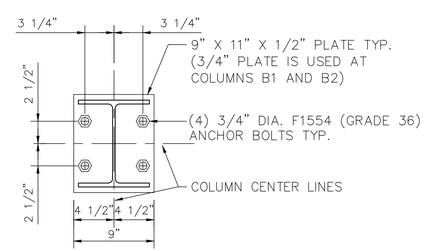

NOTE: SEE ANCHOR BOLT PLAN FOR COLUMN ORIENTATION AND CENTER LINE LOCATIONS.

RESIDENCE COLUMN ANCHOR BOLT DETAIL

scale: 1 1/2" = 1'–0"

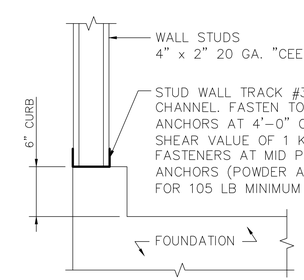

TYPICAL STUD WALL BASE DETAIL

scale: 1 1/2" = 1'–0"

REVISIONS	by

COMMONWEALTH OF VIRGINIA — STEVEN P. WESTRA — Lic. No. 03397 — JAN 18 2019 — PROFESSIONAL ENGINEER

THIS DRAWING AND ALL PARTS THEREOF IS THE EXCLUSIVE PROPERTY OF FIRE FACILITIES, INC., 314 WILBURN ROAD, SUN PRAIRIE, WI 53590 OFFICE: (608) 327-4100 FAX (608) 834-1843 AND MAY NOT BE REPRODUCED IN WHOLE OR PART WITHOUT WRITTEN PERMISSION.

FIRE FACILITIES
STEEL FIRE TRAINING TOWERS
FIRE FACILITIES, INC.
314 WILBURN ROAD, SUN PRAIRIE, WI 53590
OFFICE: (608) 327-4100 FAX: (608) 834-1843
TOLL FREE: (800) 929-3726 TOLL FREE FAX: (866) 639-7012
WWW.FIREFACILITIES.COM; INFO@FIREFACILITIES.COM

Job Description: WESCO MODEL WH–2 CUSTOM WINCHESTER, VA

Sheet Title: ANCHOR BOLT PLAN

Date	JANUARY 4, 2019
Drawn by	KAH
Checked by	SPW
Scale	SHOWN
Order No.	FTE–733/#208929
Sheet No.	03 of 25

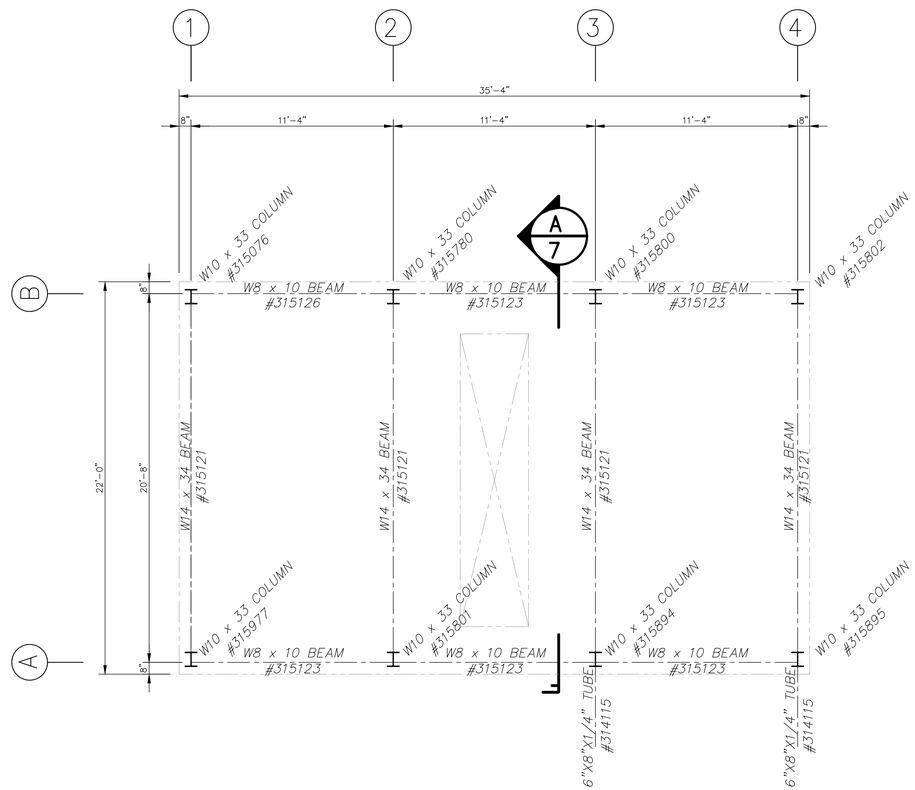

SECOND FLOOR STRUCTURAL FRAMING PLAN

SCALE: 1/4"=1'-0"

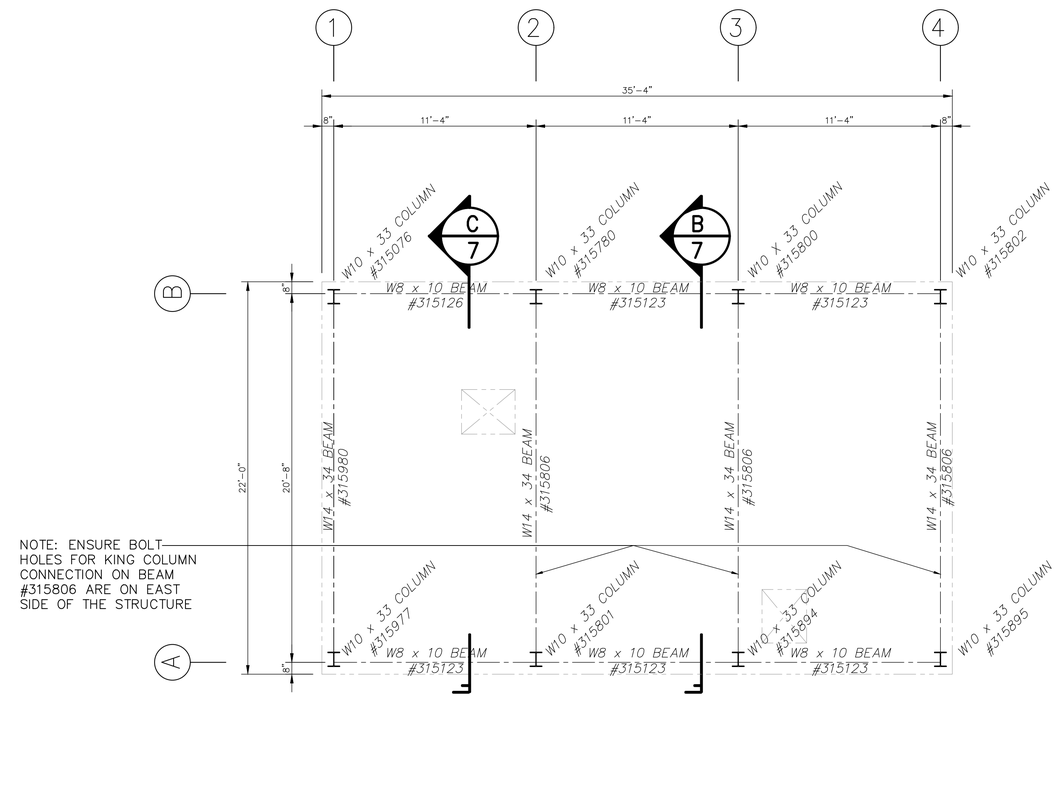

THIRD FLOOR/ATTIC STRUCTURAL FRAMING PLAN

SCALE: 1/4"=1'-0"

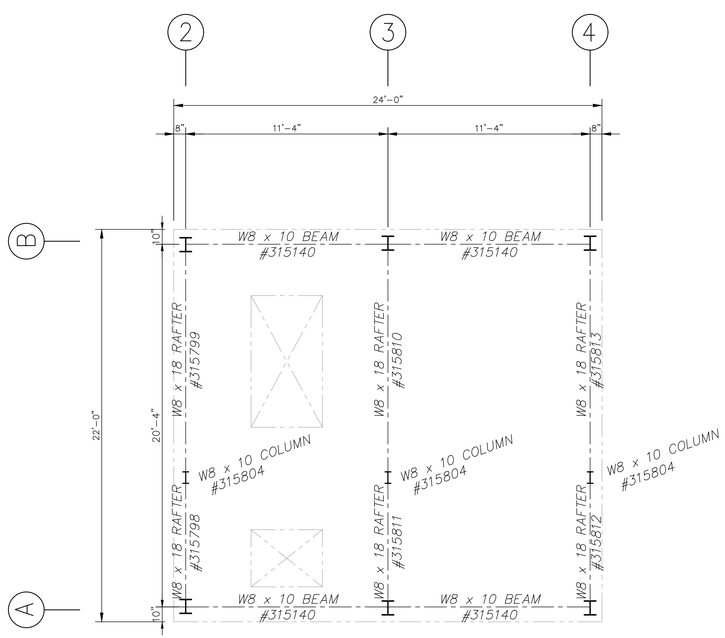

RESIDENCE ROOF STRUCTURAL FRAMING PLAN

SCALE: 1/4"=1'-0"

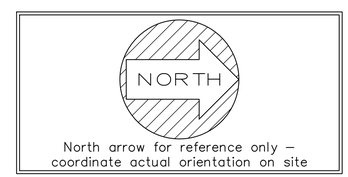

NOTE: TEMPORARY SUPPORT OF THIS STRUCTURAL FRAME IS REQUIRED AND IS THE SOLE RESPONSIBILITY OF THE ERECTOR. THIS TEMPORARY SUPPORT SHOULD NOT BE REMOVED UNTIL ALL OF THE FLOOR AND WALL SYSTEMS ARE IN PLACE.

NOTE: THIS STRUCTURAL FRAME IS DESIGNED WITH ALL SHEAR/BEARING CONNECTIONS (NOT SLIP-CRITICAL) AND ALL JOINTS ARE OF THE SNUG-TIGHTENED TYPE. COMPACTING THE JOINT TO THE SNUG-TIGHT CONDITION SHALL PROGRESS SYSTEMATICALLY FROM THE MOST RIGID PART OF THE JOINT. THE SNUG-TIGHTENED CONDITION IS THE TIGHTNESS THAT IS ATTAINED BY A FEW IMPACTS OF AN IMPACT WRENCH OR THE FULL EFFORT OF AN IRONWORKER USING AN ORDINARY SPUD WRENCH TO BRING THE CONNECTED PLIES INTO FIRM CONTACT.

REVISIONS	by

COMMONWEALTH OF VIRGINIA
STEVEN P. WESTRA
Lic. No. 035397
JAN 1 8 2019
PROFESSIONAL ENGINEER

THIS DRAWING AND ALL PARTS THEREOF IS THE EXCLUSIVE PROPERTY OF FIRE FACILITIES, INC., 314 WILBURN ROAD, SUN PRAIRIE, WI 53590 OFFICE: (608) 327-4100 FAX (608) 834-1843 AND MAY NOT BE REPRODUCED IN WHOLE OR PART WITHOUT WRITTEN PERMISSION.

FIRE FACILITIES
STEEL FIRE TRAINING TOWERS
FIRE FACILITIES, INC.
314 WILBURN ROAD, SUN PRAIRIE, WI 53590
OFFICE: (608) 327-4100 FAX: (608) 834-1843
TOLL FREE: (800) 929-3726 TOLL FREE FAX: (866) 639-7012
WWW.FIREFACILITIES.COM; INFO@ FIREFACILITIES.COM

Job Description
WESCO MODEL WH-2
CUSTOM
WINCHESTER, VA

Sheet Title
STRUCTURAL FRAMING PLAN

Date	JANUARY 4, 2019
Drawn by	KAH
Checked by	SPW
Scale	SHOWN
Order No.	FTE-733/#208929
Sheet No.	04 of 25

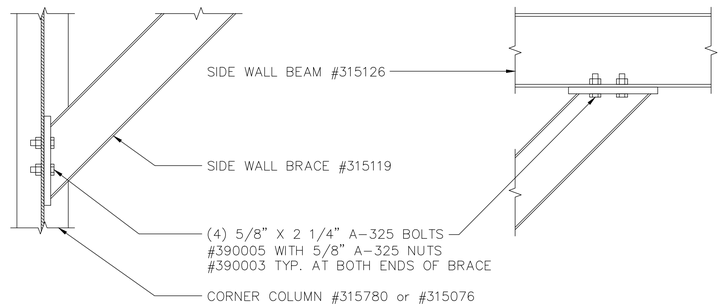

"A" TYPICAL SIDE WALL BRACE CONNECTION DETAILS

scale: 1 1/2"=1'-0"

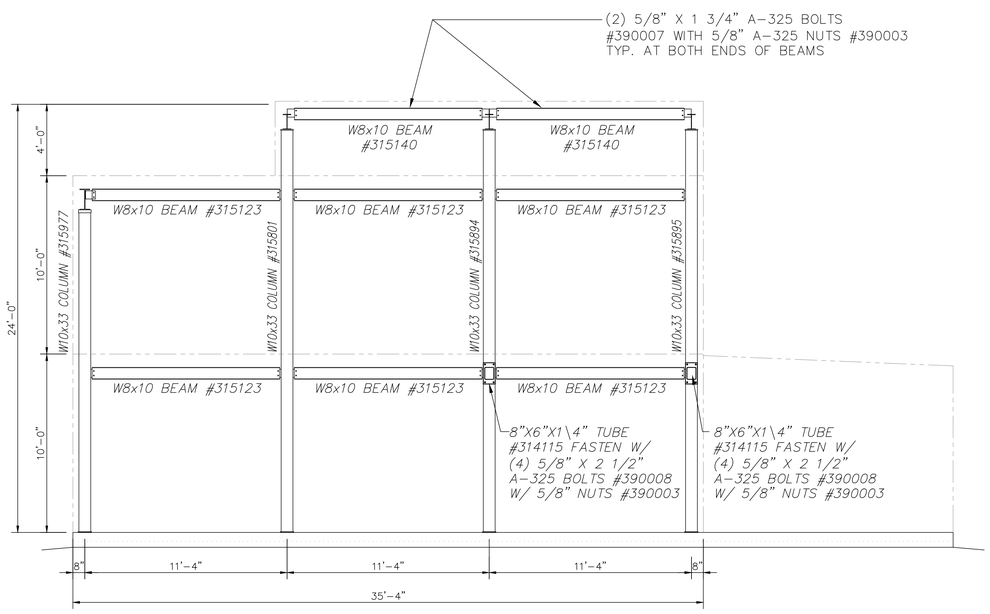

EAST SIDE WALL STRUCTURAL FRAMING ELEVATION

SCALE: 1/4"=1'-0"

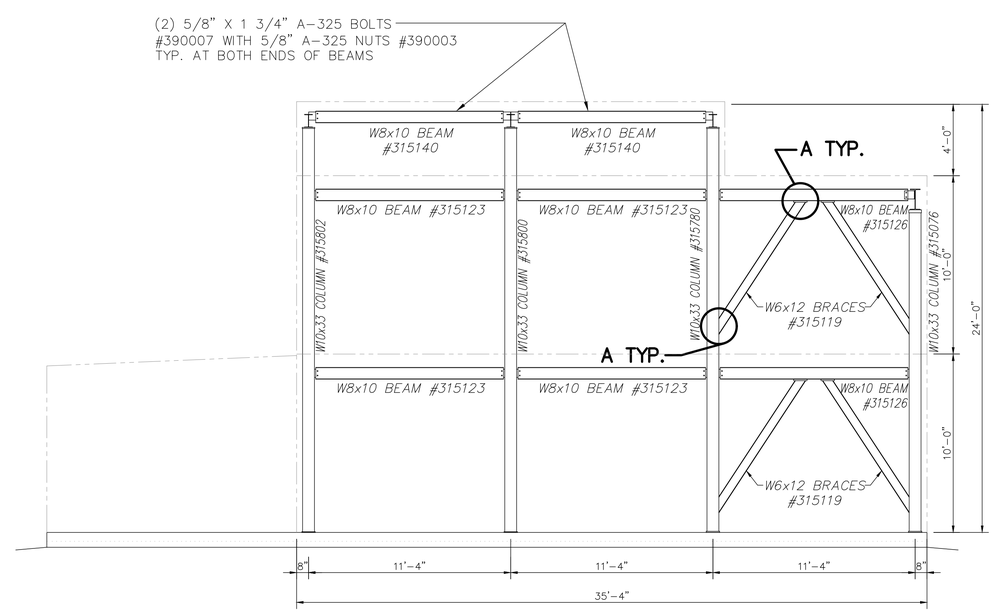

WEST SIDE WALL STRUCTURAL FRAMING ELEVATION

SCALE: 1/4"=1'-0"

REVISIONS	by

COMMONWEALTH OF VIRGINIA
STEVEN P. WESTRA
Lic. No. 035397
JAN 18 2019
PROFESSIONAL ENGINEER

THIS DRAWING AND ALL PARTS THEREOF IS THE EXCLUSIVE PROPERTY OF FIRE FACILITIES, INC., 314 WILBURN ROAD, SUN PRAIRIE, WI 53590 OFFICE: (608) 327-4100 FAX (608) 834-1843 AND MAY NOT BE REPRODUCED IN WHOLE OR PART WITHOUT WRITTEN PERMISSION.

FIRE FACILITIES
STEEL FIRE TRAINING TOWERS
FIRE FACILITIES, INC.
314 WILBURN ROAD, SUN PRAIRIE, WI 53590
OFFICE: (608) 327-4100 FAX: (608) 834-1843
TOLL FREE: (800) 929-3726 TOLL FREE FAX: (866) 639-7012
WWW.FIREFACILITIES.COM; INFO@ FIREFACILITIES.COM

Job Description: WESCO MODEL WH-2
CUSTOM
WINCHESTER, VA

Sheet Title: STRUCTURAL ELEVATIONS

Date	JANUARY 4, 2019
Drawn by	KAH
Checked by	SPW
Scale	SHOWN
Order No.	FTE-733/#208929
Sheet No.	05 of 25

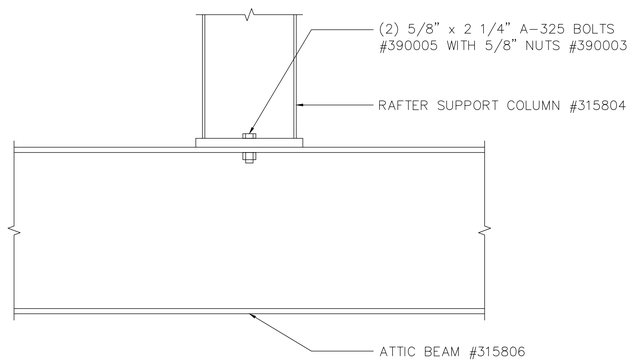

"B" RAFTER SUPPORT COLUMN BASE

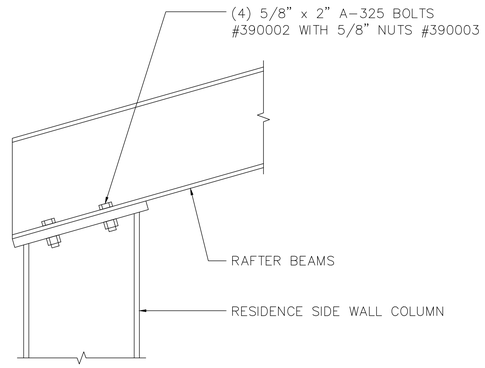

"C" RAFTER EAVE CONNECTION

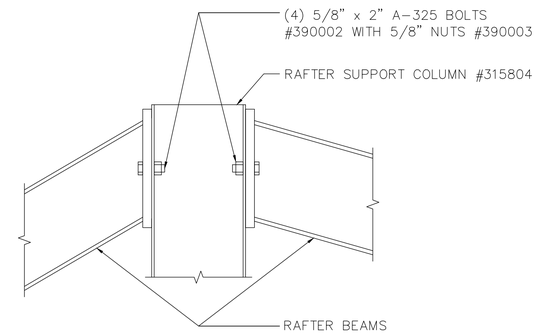

"D" RAFTER RIDGE CONNECTION

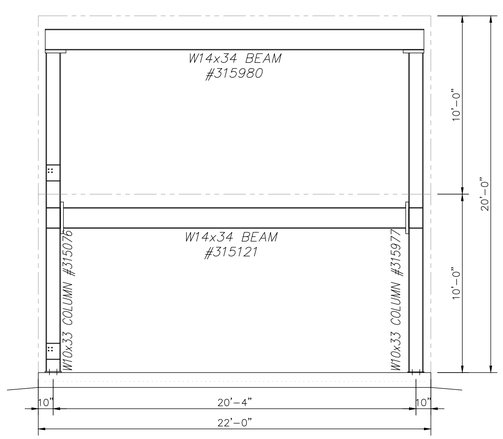

SOUTH END STRUCTURAL FRAME

SCALE: 1/4"=1'-0"

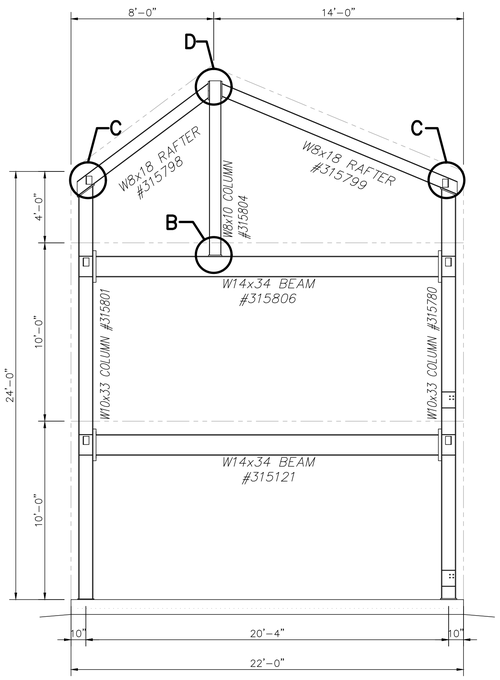

RESIDENCE GABLE TO FLAT STRUCTURAL FRAME

SCALE: 1/4"=1'-0"

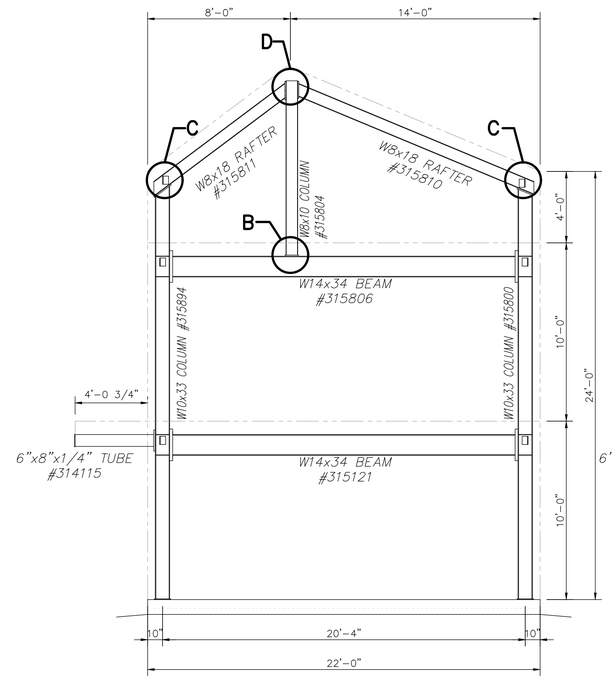

RESIDENCE INTERIOR STRUCTURAL FRAME

SCALE: 1/4"=1'-0"

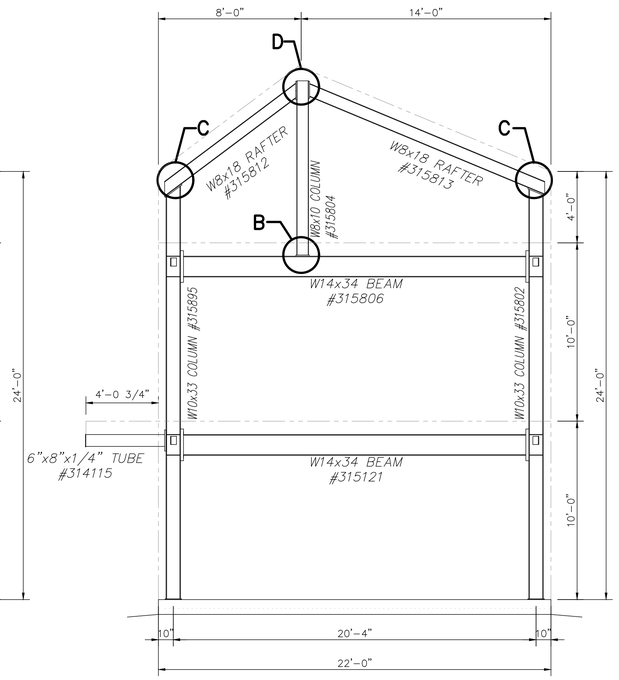

NORTH END STRUCTURAL FRAME

SCALE: 1/4"=1'-0"

REVISIONS	by

COMMONWEALTH OF VIRGINIA
STEVEN P. WESTRA
Lic. No. 035397
JAN 18 2019
PROFESSIONAL ENGINEER

THIS DRAWING AND ALL PARTS THEREOF IS THE EXCLUSIVE PROPERTY OF FIRE FACILITIES, INC., 314 WILBURN ROAD, SUN PRAIRIE, WI 53590 OFFICE: (608) 327-4100 FAX (608) 834-1843 AND MAY NOT BE REPRODUCED IN WHOLE OR PART WITHOUT WRITTEN PERMISSION.

FIRE FACILITIES
STEEL FIRE TRAINING TOWERS
FIRE FACILITIES, INC.
314 WILBURN ROAD, SUN PRAIRIE, WI 53590
OFFICE: (608) 327-4100 FAX: (608) 834-1843
TOLL FREE: (800) 929-3726 TOLL FREE FAX: (866) 639-7012
WWW.FIREFACILITIES.COM; INFO@ FIREFACILITIES.COM

Job Description: WESCO MODEL WH-2
CUSTOM
WINCHESTER, VA

Sheet Title: STRUCTURAL ELEVATIONS CONT.

Date	JANUARY 4, 2019
Drawn by	KAH
Checked by	SPW
Scale	SHOWN
Order No.	FTE-733/#208929
Sheet No.	06 of 25

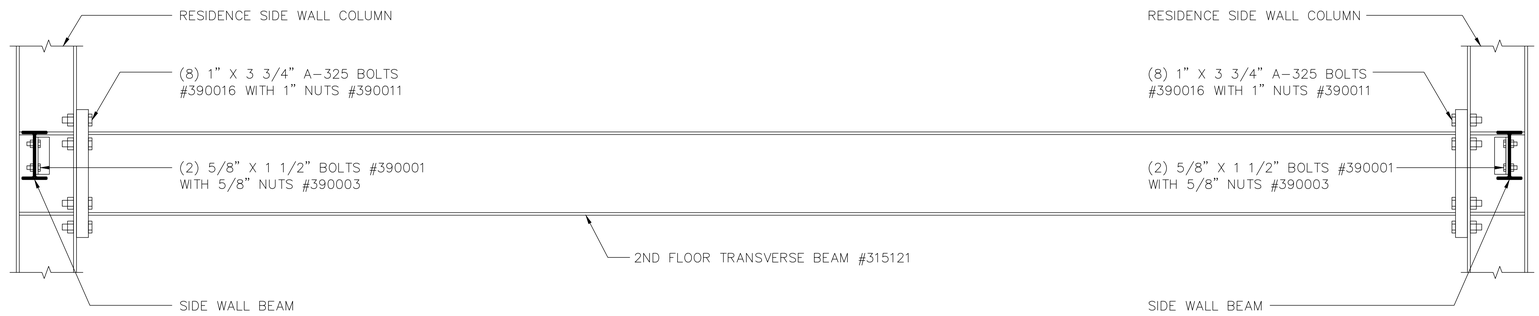

"A" SECTION THRU SECOND FLOOR RESIDENCE FRAMING

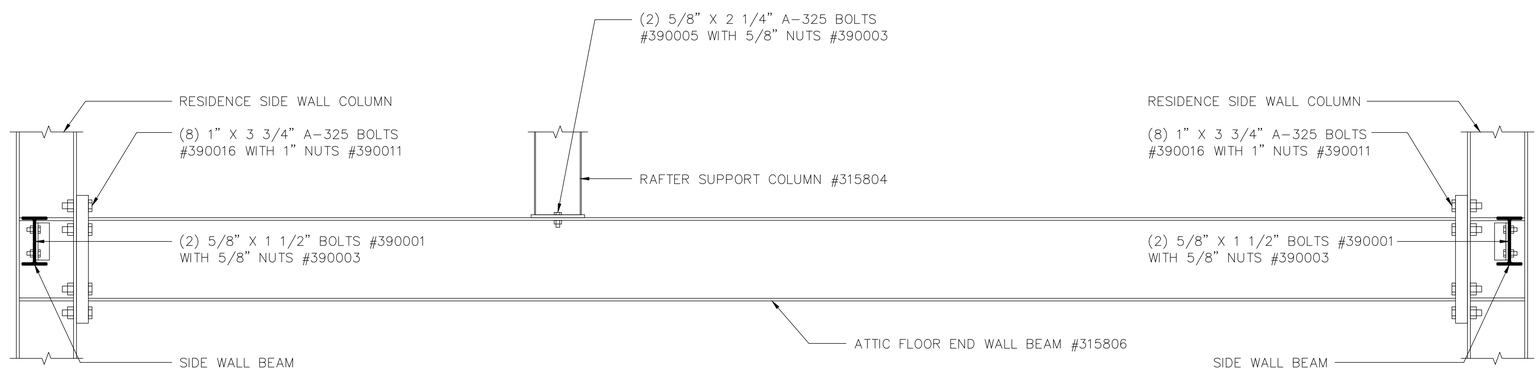

"B" SECTION THRU ATTIC FLOOR RESIDENCE FRAMING

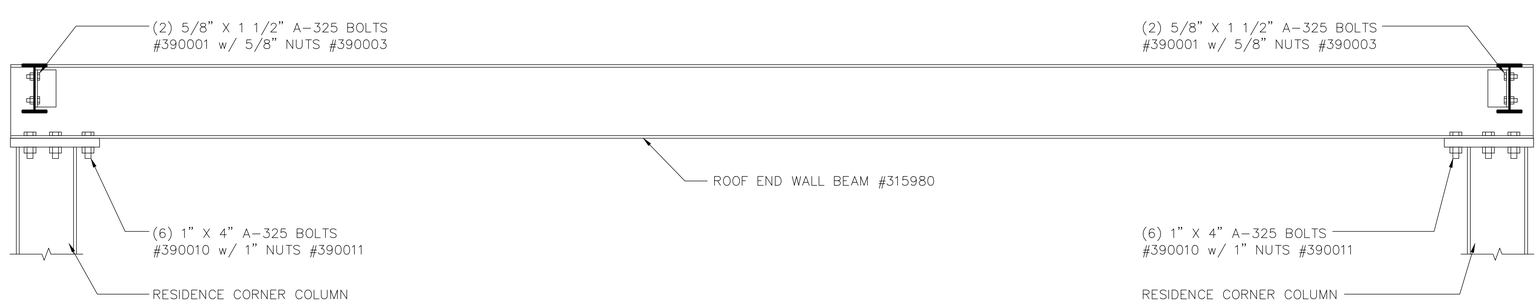

"C" SECTION THRU RESIDENCE ROOF FRAMING

REVISIONS	by

COMMONWEALTH OF VIRGINIA
STEVEN P. WESTRA
Lic. No. 035397
JAN 18 2019
PROFESSIONAL ENGINEER

THIS DRAWING AND ALL PARTS THEREOF IS THE EXCLUSIVE PROPERTY OF FIRE FACILITIES, INC., 314 WILBURN ROAD, SUN PRAIRIE, WI 53590 OFFICE: (608) 327-4100 FAX (608) 834-1843 AND MAY NOT BE REPRODUCED IN WHOLE OR PART WITHOUT WRITTEN PERMISSION.

FIRE FACILITIES
STEEL FIRE TRAINING TOWERS
FIRE FACILITIES, INC.
314 WILBURN ROAD, SUN PRAIRIE, WI 53590
OFFICE: (608) 327-4100 FAX: (608) 834-1843
TOLL FREE: (800) 929-3726 TOLL FREE FAX: (866) 639-7012
WWW.FIREFACILITIES.COM; INFO@ FIREFACILITIES.COM

Job Description: WESCO MODEL WH-2
CUSTOM
WINCHESTER, VA

Sheet Title: STRUCTURAL SECTIONS

Date	JANUARY 4, 2019
Drawn by	KAH
Checked by	SPW
Scale	SHOWN
Order No.	FTE-733/#208929
Sheet No.	07 of 25

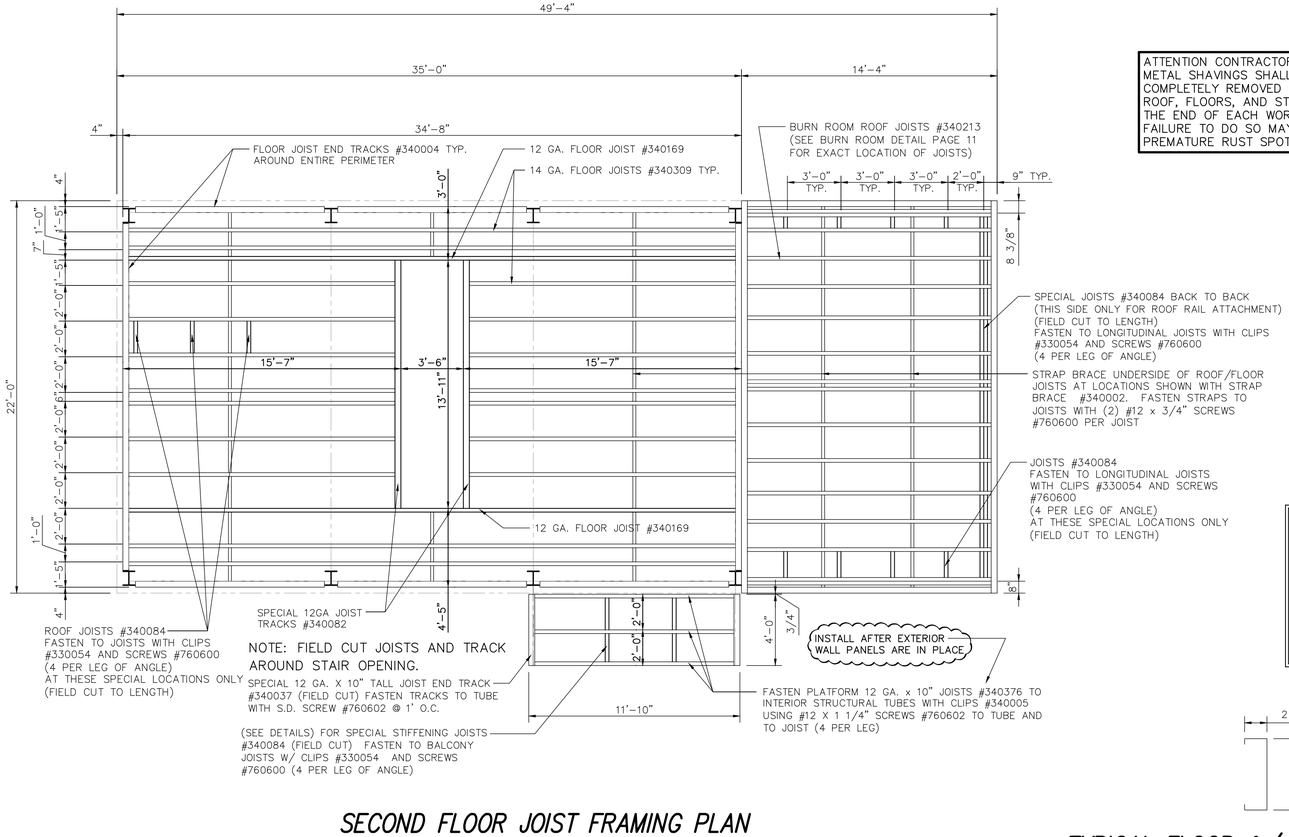

SECOND FLOOR JOIST FRAMING PLAN

SCALE: 1/4"=1'-0"

ATTENTION CONTRACTORS:
METAL SHAVINGS SHALL BE COMPLETELY REMOVED FROM THE ROOF, FLOORS, AND STUD TRACKS AT THE END OF EACH WORK DAY. FAILURE TO DO SO MAY RESULT IN PREMATURE RUST SPOTS.

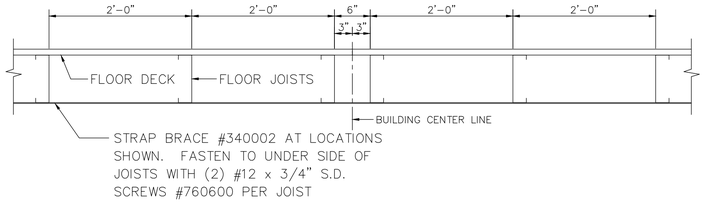

SECTION THRU FLOOR SHOWING TYP. JOIST SPACING

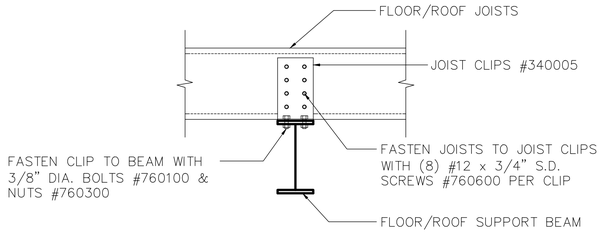

TYP. JOIST TO INTERIOR BEAM CONN.

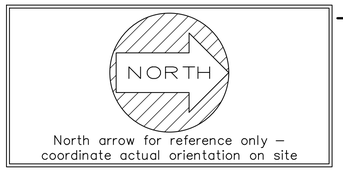

SOME FIELD DRILLING OF HOLES IN THE STRUCT. BEAM WILL BE REQUIRED FOR THE 3/8" BOLT ATTACHMENT OF THE CLIP TO THE STRUCTURAL BEAM

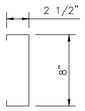

TYPICAL FLOOR &/or ROOF JOIST

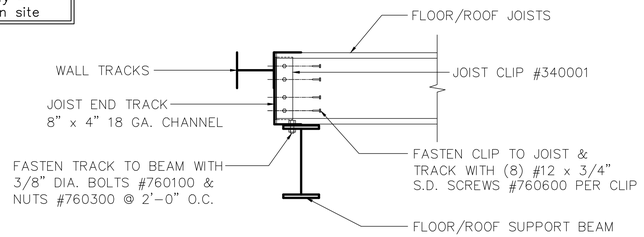

TYP. JOIST TO EXTERIOR BEAM CONN.

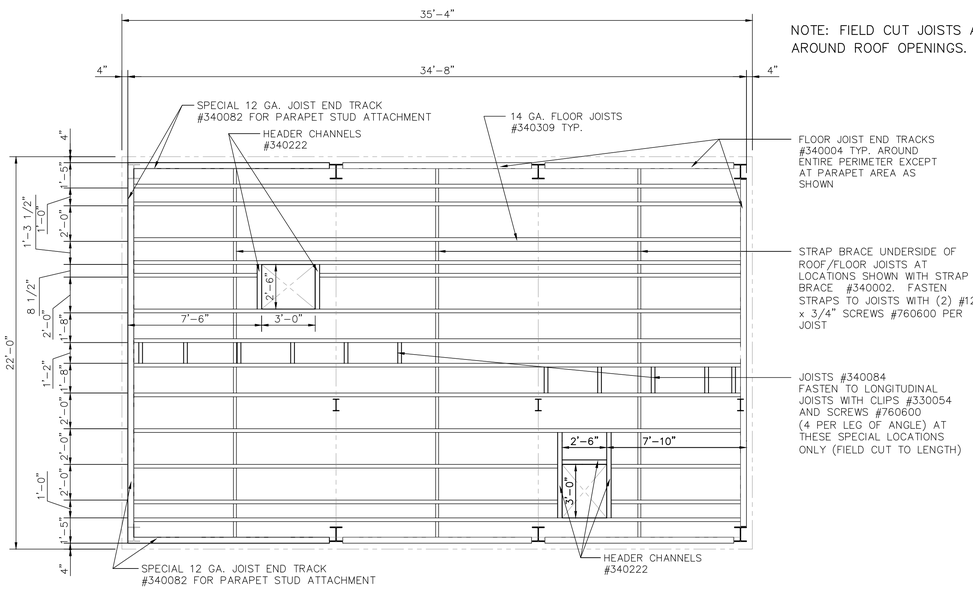

NOTE: FIELD CUT JOISTS AND TRACK AROUND ROOF OPENINGS.

PARAPET/ATTIC JOIST FRAMING PLAN

SCALE: 1/4"=1'-0"

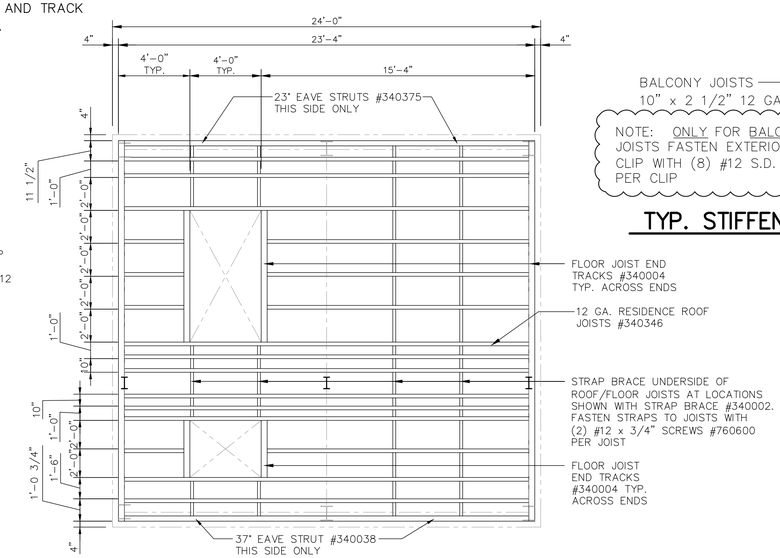

RESIDENCE ROOF JOIST FRAMING PLAN

SCALE: 1/4"=1'-0"

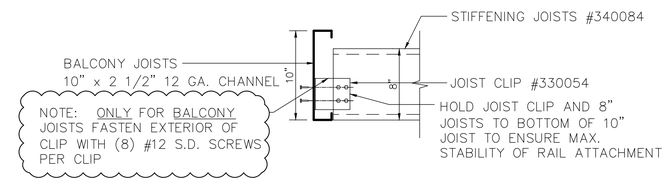

TYP. STIFFENING JOIST TO BALCONY JOIST CONN.

REVISIONS	by

COMMONWEALTH OF VIRGINIA
STEVEN P. WESTRA
Lic. No. 03397
JAN 18 2019
PROFESSIONAL ENGINEER

THIS DRAWING AND ALL PARTS THEREOF IS THE EXCLUSIVE PROPERTY OF FIRE FACILITIES, INC., 314 WILBURN ROAD, SUN PRAIRIE, WI 53590 OFFICE: (608) 327-4100 FAX (608) 834-1843 AND MAY NOT BE REPRODUCED IN WHOLE OR PART WITHOUT WRITTEN PERMISSION.

FIRE FACILITIES
STEEL FIRE TRAINING TOWERS
FIRE FACILITIES, INC.
314 WILBURN ROAD, SUN PRAIRIE, WI 53590
OFFICE: (608) 327-4100 FAX: (608) 834-1843
TOLL FREE: (800) 929-3726 TOLL FREE FAX: (866) 639-7012
WWW.FIREFACILITIES.COM; INFO@ FIREFACILITIES.COM

Job Description: WESCO MODEL WH-2 CUSTOM WINCHESTER, VA

Sheet Title: JOIST PLANS AND DETAILS

Date	JANUARY 4, 2019
Drawn by	KAH
Checked by	SPW
Scale	SHOWN
Order No.	FTE-733/#208929
Sheet No.	08 of 25

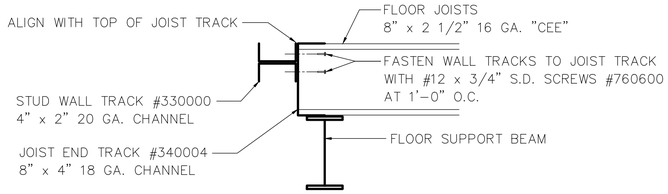

TYPICAL TOWER STUD TRACK CONNECTION

scale: 1 1/2" = 1'-0"

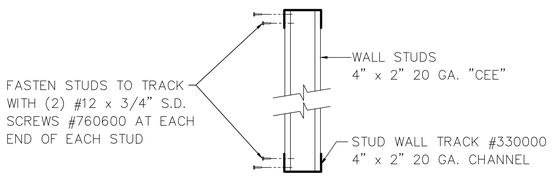

TYPICAL TOWER STUD CONNECTION

scale: 1 1/2" = 1'-0"

NOTE: FIELD LOCATE RESIDENCE AND TOWER FRAMED OPENINGS UNLESS DIMENSIONED ON PLANS OR ELEVATIONS.

NOTE: FIELD CUT FRAMING AROUND FRAMED OPENINGS

ATTENTION CONTRACTORS:
METAL SHAVINGS SHALL BE COMPLETELY REMOVED FROM THE ROOF, FLOORS, AND STUD TRACKS AT THE END OF EACH WORK DAY. FAILURE TO DO SO MAY RESULT IN PREMATURE RUST SPOTS.

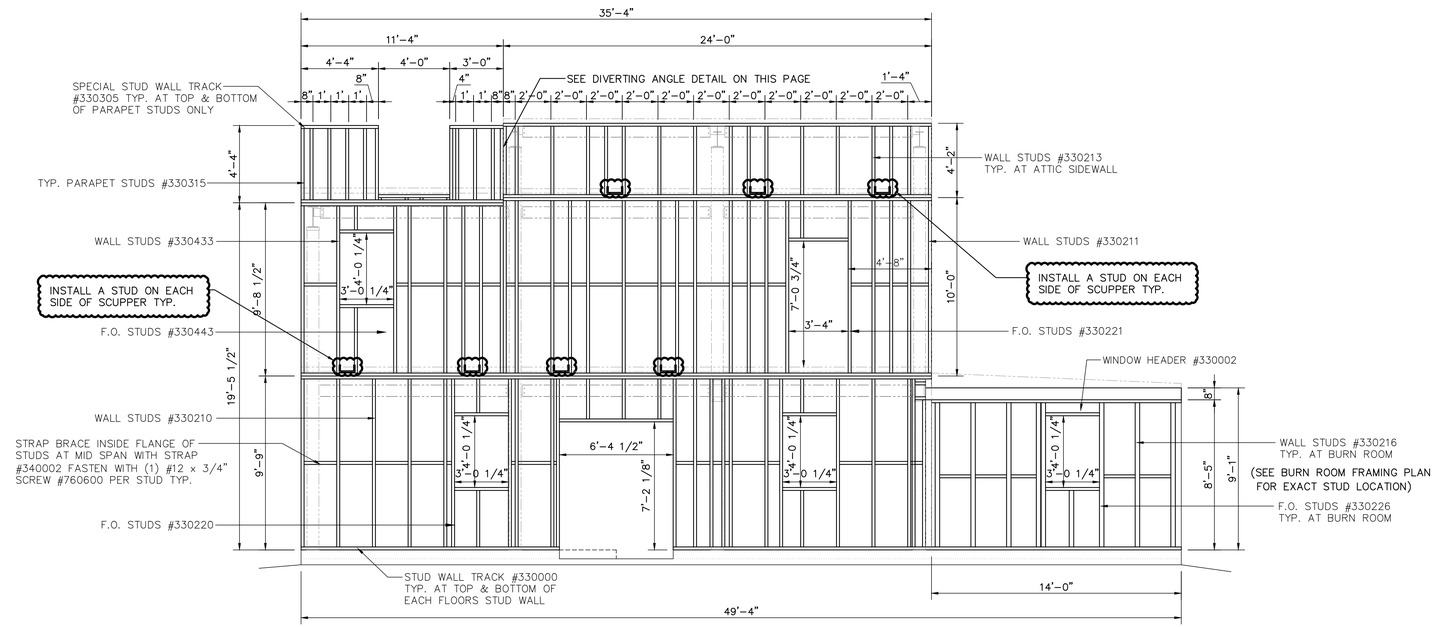

EAST SIDE STUD WALL FRAMING ELEVATION

SCALE: 1/4"=1'-0"

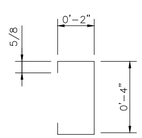

TYP. WALL STUD

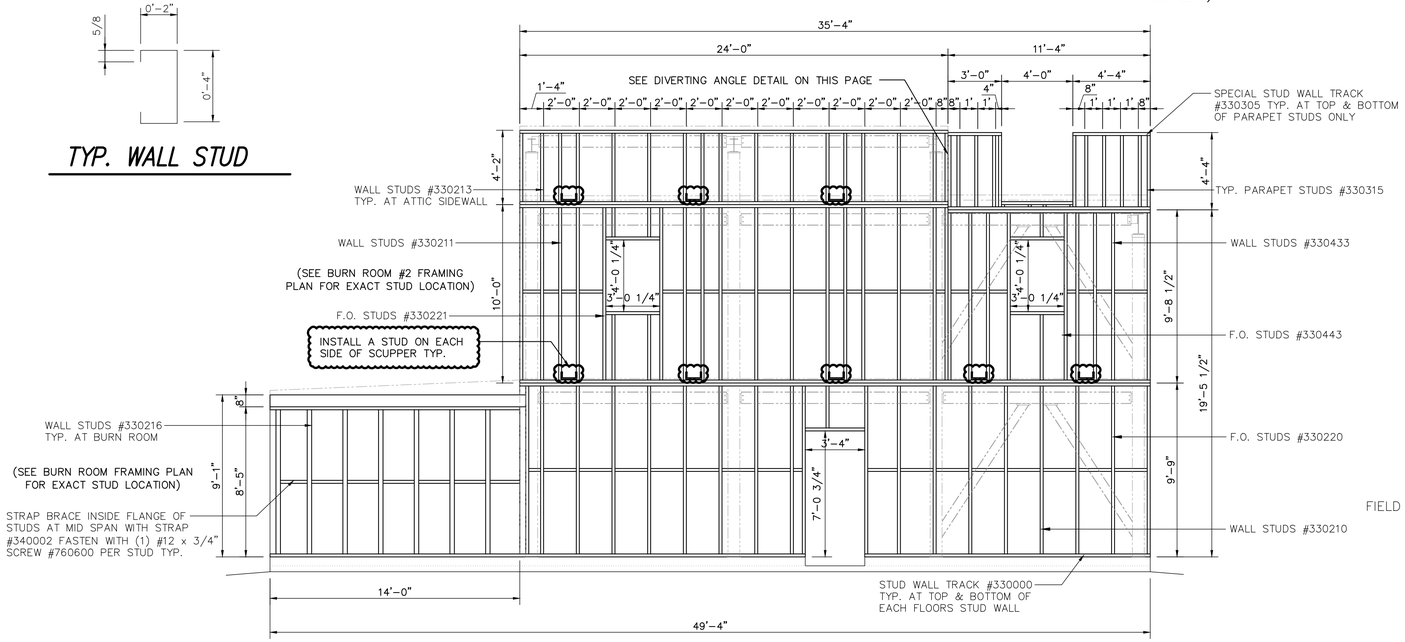

WEST SIDE STUD WALL FRAMING ELEVATION

SCALE: 1/4"=1'-0"

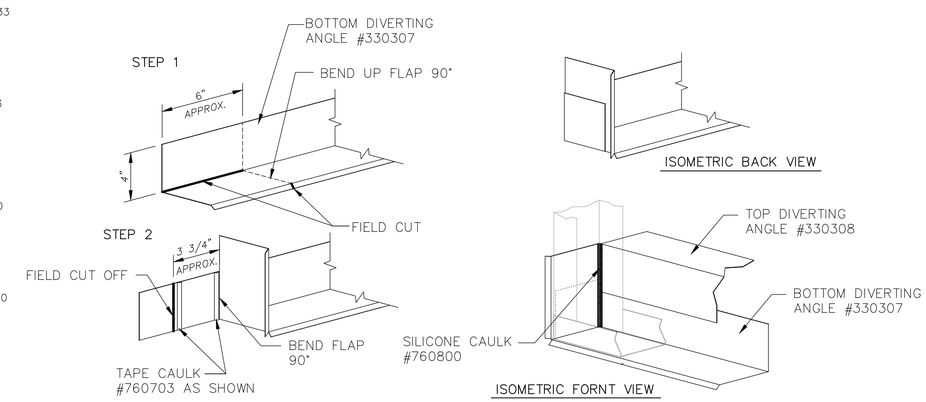

DIVERTING ANGLE DETAIL AT ATTIC & PARAPET WALL

REVISIONS	by

LICENSED PROFESSIONAL ENGINEER
COMMONWEALTH OF VIRGINIA
STEVEN P. WESTRA
Lic. No. 035397
JAN 18 2019

THIS DRAWING AND ALL PARTS THEREOF IS THE EXCLUSIVE PROPERTY OF FIRE FACILITIES, INC., 314 WILBURN ROAD, SUN PRAIRIE, WI 53590 OFFICE: (608) 327-4100 FAX (608) 834-1843 AND MAY NOT BE REPRODUCED IN WHOLE OR PART WITHOUT WRITTEN PERMISSION.

FIRE FACILITIES
STEEL FIRE TRAINING TOWERS
FIRE FACILITIES, INC.
314 WILBURN ROAD, SUN PRAIRIE, WI 53590
OFFICE: (608) 327-4100 FAX: (608) 834-1843
TOLL FREE: (800) 929-3726 TOLL FREE FAX: (866) 639-7012
WWW.FIREFACILITIES.COM; INFO@ FIREFACILITIES.COM

Job Description: WESCO MODEL WH-2 CUSTOM WINCHESTER, VA

Sheet Title: STUD WALL ELEVATIONS & DETAILS

Date	JANUARY 4, 2019
Drawn by	KAH
Checked by	SPW
Scale	SHOWN
Order No.	FTE-733/#208929
Sheet No.	09 of 25

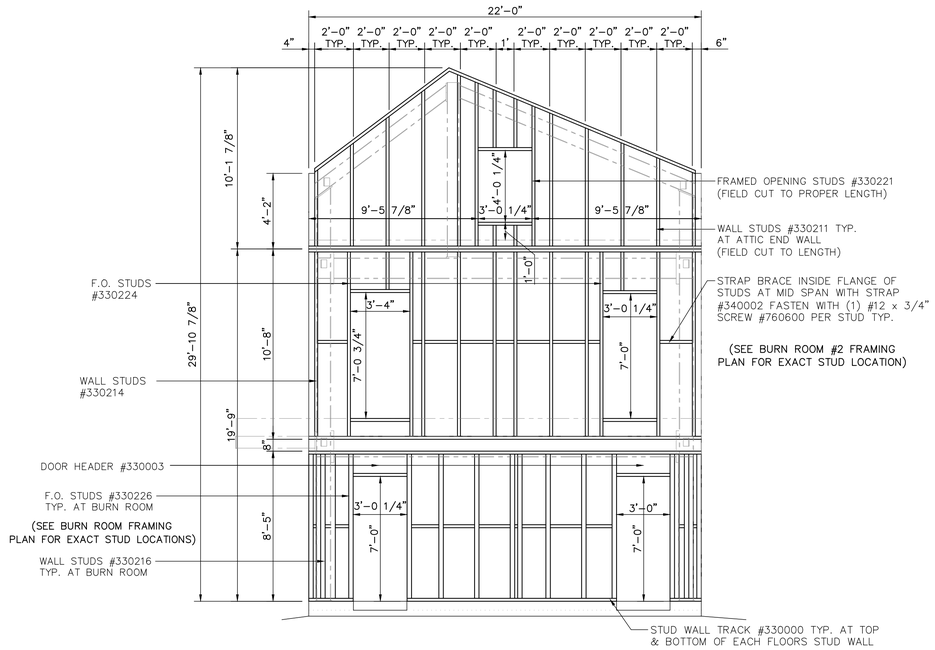

NORTH END & ANNEX TRANSITION WALL FRAMING

SCALE: 1/4"=1'-0"

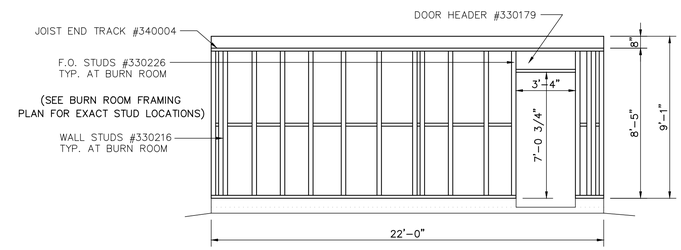

NORTH END ANNEX WALL FRAMING

SCALE: 1/4"=1'-0"

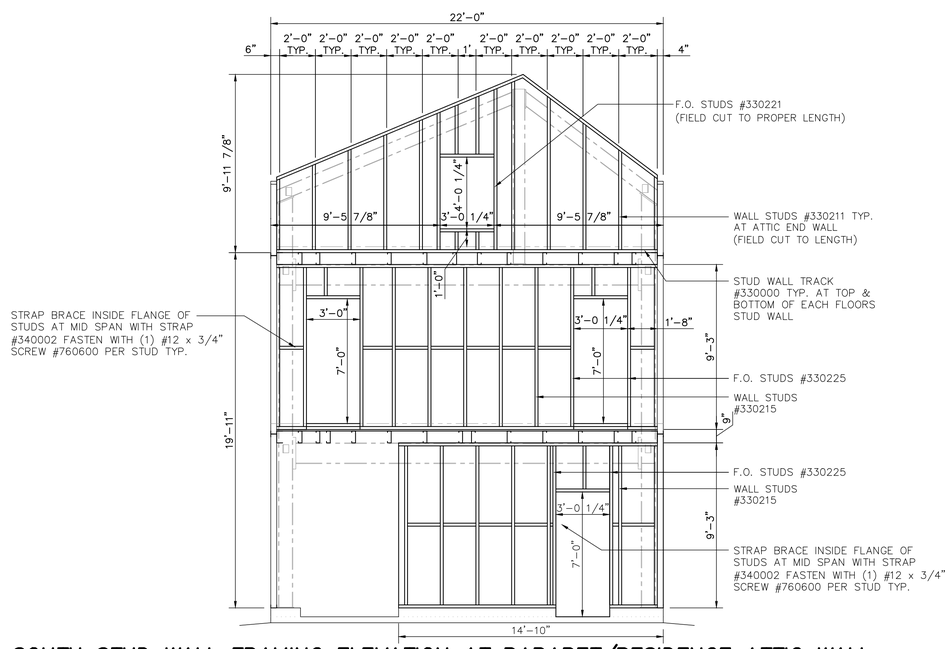

SOUTH STUD WALL FRAMING ELEVATION AT PARAPET/RESIDENCE ATTIC WALL

SCALE: 1/4"=1'-0"

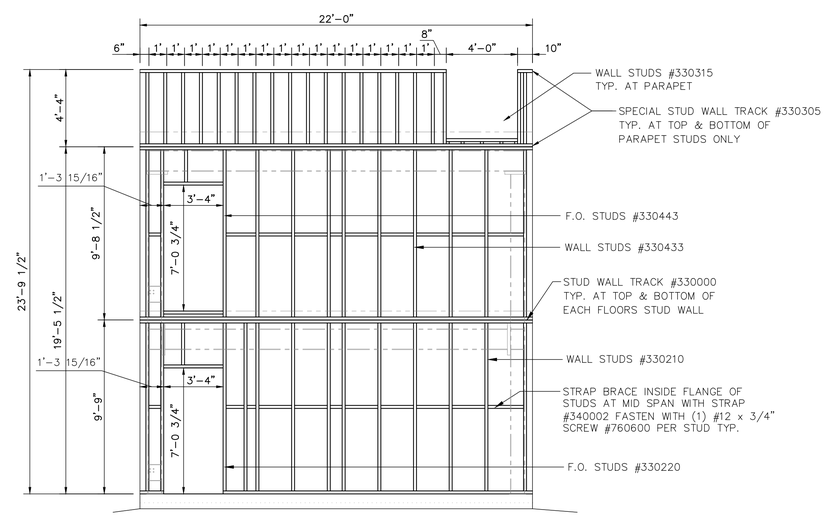

SOUTH END STUD WALL FRAMING ELEVATION

SCALE: 1/4"=1'-0"

REVISIONS	by

COMMONWEALTH OF VIRGINIA
STEVEN P. WESTRA
Lic. No. 035397
JAN 18 2019
PROFESSIONAL ENGINEER

THIS DRAWING AND ALL PARTS THEREOF IS THE EXCLUSIVE PROPERTY OF FIRE FACILITIES, INC., 314 WILBURN ROAD, SUN PRAIRIE, WI 53590 OFFICE: (608) 327-4100 FAX (608) 834-1843 AND MAY NOT BE REPRODUCED IN WHOLE OR PART WITHOUT WRITTEN PERMISSION.

FIRE FACILITIES
STEEL FIRE TRAINING TOWERS
FIRE FACILITIES, INC.
314 WILBURN ROAD, SUN PRAIRIE, WI 53590
OFFICE: (608) 327-4100 FAX: (608) 834-1843
TOLL FREE: (800) 929-3726 TOLL FREE FAX: (866) 639-7012
WWW.FIREFACILITIES.COM; INFO@ FIREFACILITIES.COM

Job Description: WESCO MODEL WH-2
CUSTOM
WINCHESTER, VA

Sheet Title: STUD ELEVATIONS & DETAILS CONT.

Date	JANUARY 4, 2019
Drawn by	KAH
Checked by	SPW
Scale	SHOWN
Order No.	FTE-733/#208929
Sheet No.	10 of 25

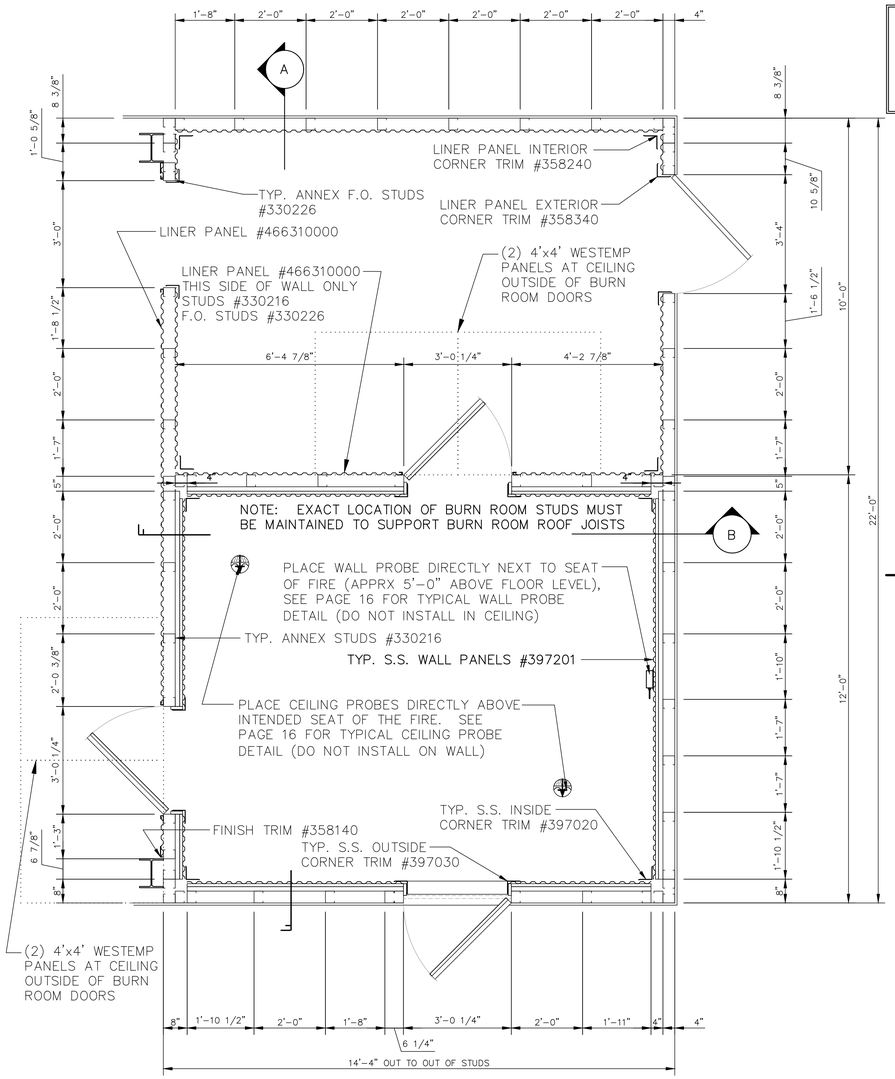

BURN ROOM PLAN & STUD LOCATIONS

SCALE: 1/2" = 1'-0"

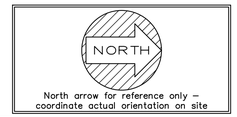

The airborne particulate generated by handling Westec insulation blanket requires the use of appropriate respiratory protection, pursuant to the requirements of OSHA standards 29 CFR 1910–134 and 29 CFF 1926–103, is recommended. Please review the Material Safety Data Sheet prior (located in erection manual) to working with Westec insulation for a complete description of all required protection.

The airborne particulate generated by cutting or trimming Westemp panels requires the use of dust masks such as the 3M 8511 N–95 or equivalent. Please review the Material Safety Data Sheet prior (located in erection manual) to working with Westemp for a complete description of all required protection.

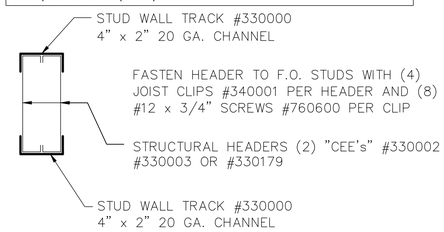

TYPICAL BURN ROOM FRAMED OPENING HEADER

scale: 1 1/2" = 1'-0"

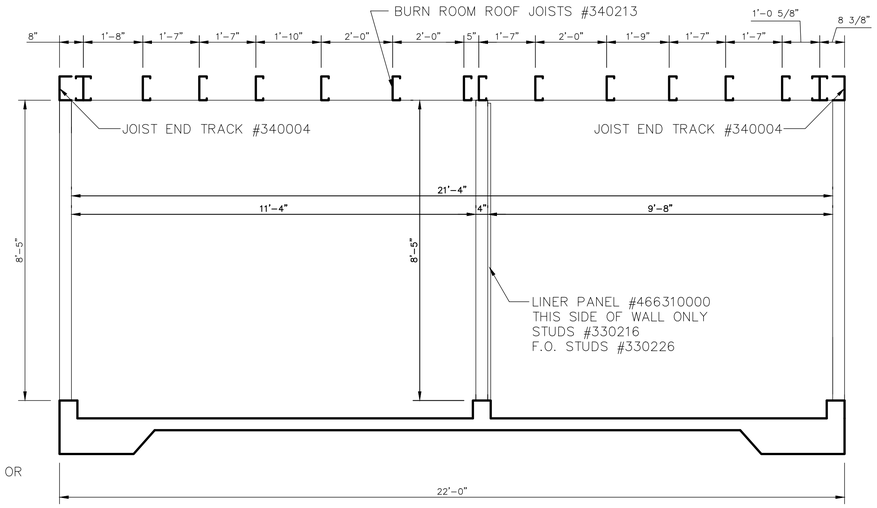

"A" SECTION THRU BURN ROOM

SCALE: 1/2" = 1'-0"

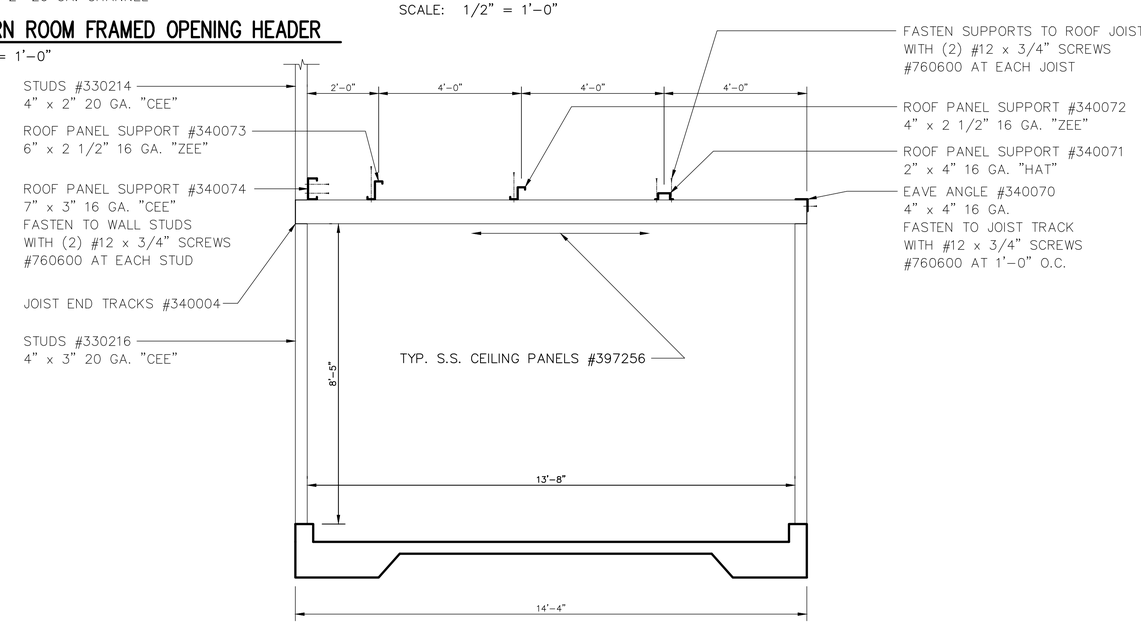

"B" SECTION THRU BURN ROOM ROOF

SCALE: 1/2" = 1'-0"

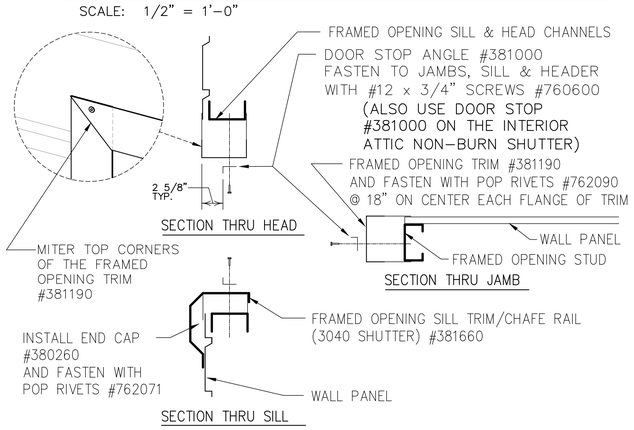

BURN RM. SHUTTER/SWING DOOR TRIM DETAILS

SCALE: 3/4" = 1'-0"

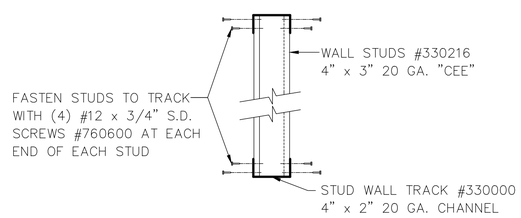

TYPICAL BURN ROOM STUD CONNECTION

scale: 1 1/2" = 1'-0"

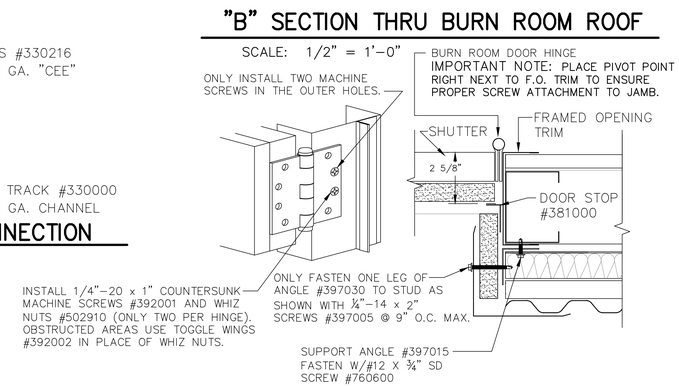

SECTION THRU. JAMB (BURN ROOM ONLY)

scale: 3" = 1'-0"

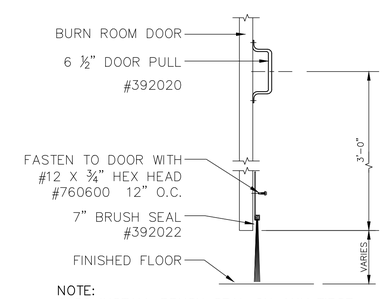

NOTE:
ALSO INSTALL BRUSH SEAL ON ANY FIRST FLOOR DOOR THAT IS POSITIONED ON TOP OF CURB LEVEL (IF ANY)

TYPICAL BURN ROOM DOOR DETAIL

scale: 1 1/2" = 1'-0"

REVISIONS	by

THIS DRAWING AND ALL PARTS THEREOF IS THE EXCLUSIVE PROPERTY OF FIRE FACILITIES, INC., 314 WILBURN ROAD, SUN PRAIRIE, WI 53590 OFFICE: (608) 327-4100 FAX (608) 834-1843 AND MAY NOT BE REPRODUCED IN WHOLE OR PART WITHOUT WRITTEN PERMISSION.

FIRE FACILITIES
STEEL FIRE TRAINING TOWERS
FIRE FACILITIES, INC.
314 WILBURN ROAD, SUN PRAIRIE, WI 53590
OFFICE: (608) 327-4100 FAX: (608) 834-1843
TOLL FREE: (800) 929-3726 TOLL FREE FAX: (866) 639-7012
WWW.FIREFACILITIES.COM; INFO@FIREFACILITIES.COM

Job Description: WESCO MODEL WH-2 CUSTOM WINCHESTER, VA

Sheet Title: ANNEX BURN ROOM DETAILS

Date:	JANUARY 4, 2019
Drawn by:	KAH
Checked by:	SPW
Scale:	SHOWN
Order No.	FTE-733/#208929
Sheet No.	11 of 25

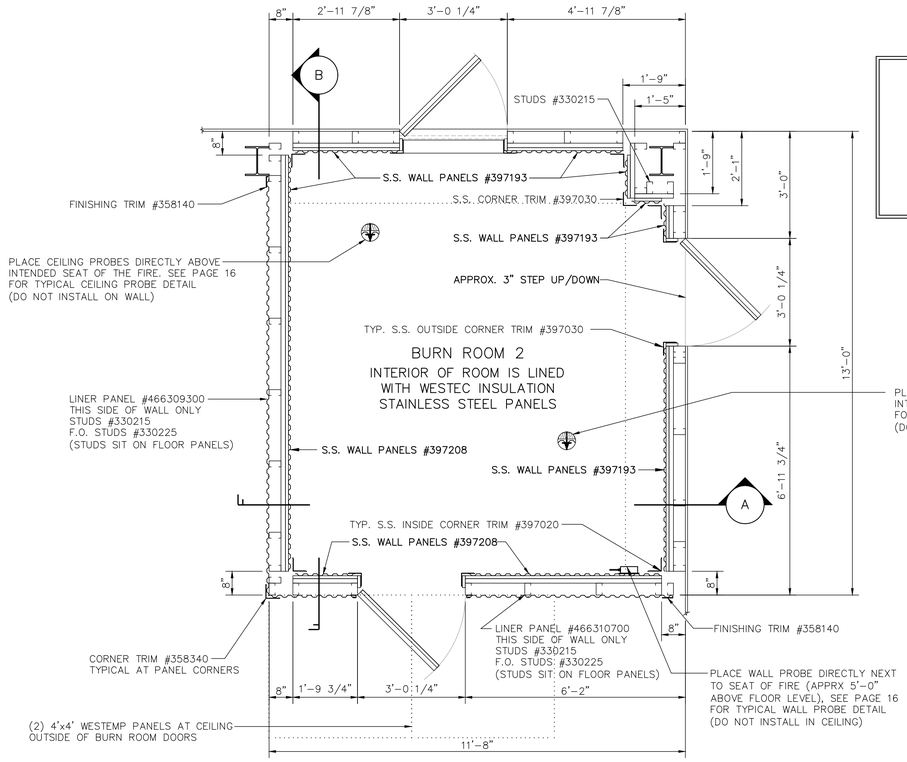

SECOND FLOOR BURN ROOM #2

scale: 1/2" = 1'-0"

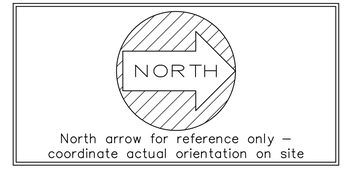

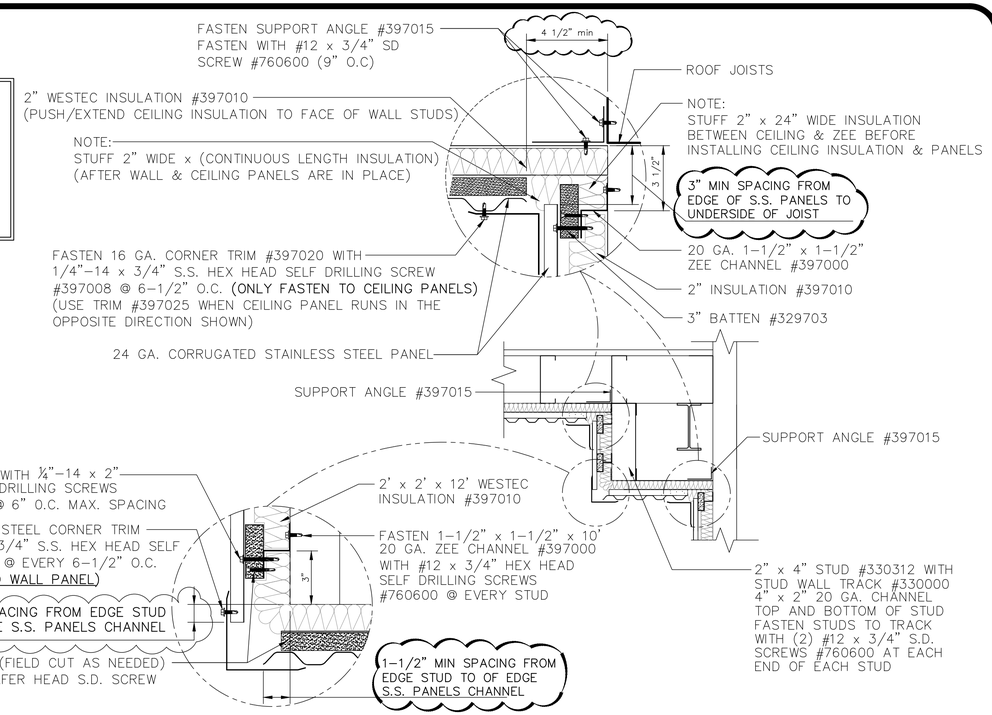

DETAIL "C" SECTION THROUGH BULK HEAD

scale: 1" = 1'-0"

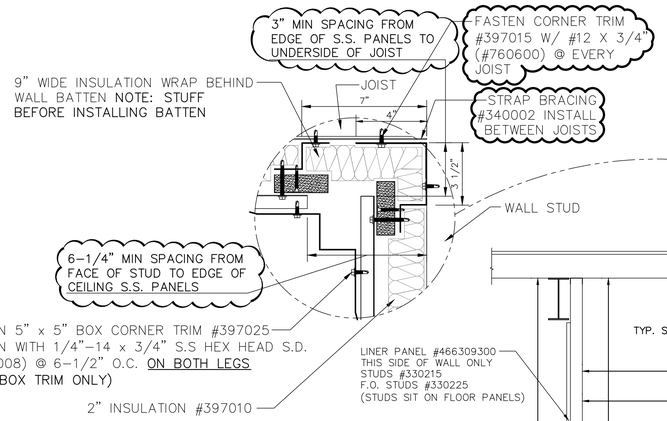

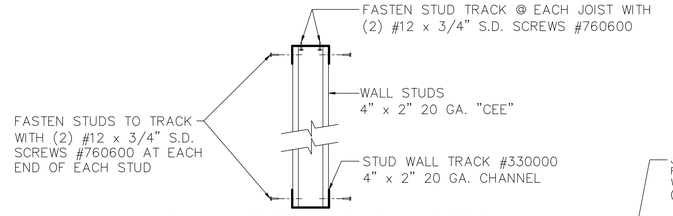

BULK HEAD STUD CONNECTION

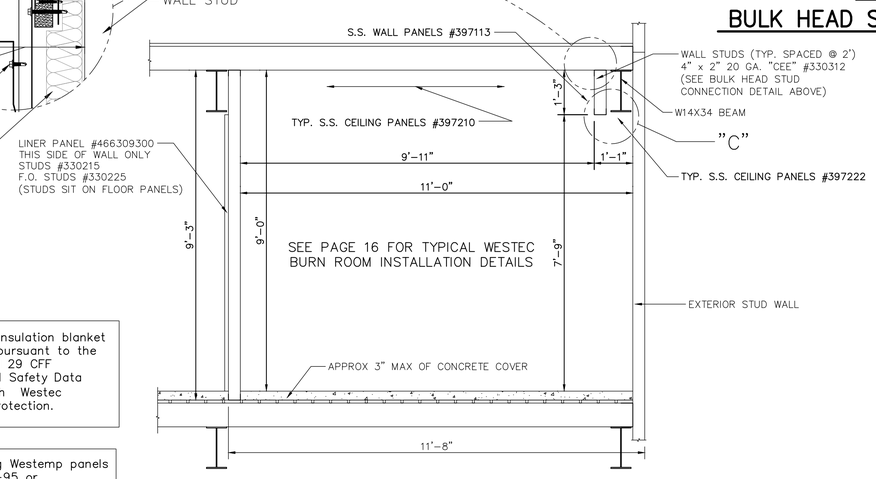

The airborne particulate generated by handling Westec insulation blanket requires the use of appropriate respiratory protection, pursuant to the requirements of OSHA standards 29 CFR 1910-134 and 29 CFF 1926-103, is recommended. Please review the Material Safety Data Sheet prior (located in erection manual) to working with Westec insulation for a complete description of all required protection.

The airborne particulate generated by cutting or trimming Westemp panels requires the use of dust masks such as the 3M 8511 N-95 or equivalent. Please review the Material Safety Data Sheet prior (located in erection manual) to working with Westemp for a complete description of all required protection.

"A" SECTION THRU 2ND FLOOR BURN ROOM #2

scale: 1/2" = 1'-0"

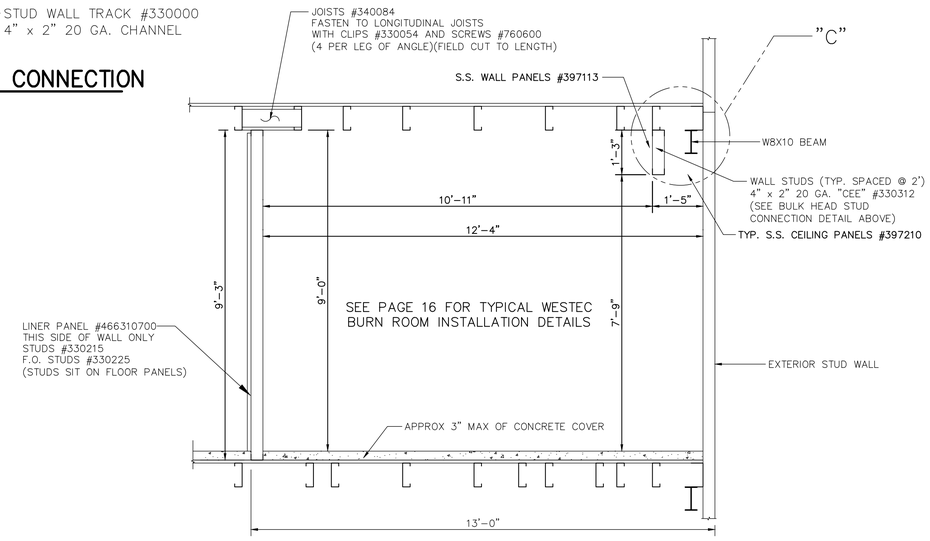

"B" SECTION THRU 2ND FLOOR BURN ROOM #2

scale: 1/2" = 1'-0"

REVISIONS	by

COMMONWEALTH OF VIRGINIA — STEVEN P. WESTRA — Lic. No. 035397 — JAN 18 2019 — PROFESSIONAL ENGINEER

THIS DRAWING AND ALL PARTS THEREOF IS THE EXCLUSIVE PROPERTY OF FIRE FACILITIES, INC., 314 WILBURN ROAD, SUN PRAIRIE, WI 53590 OFFICE: (608) 327-4100 FAX (608) 834-1843 AND MAY NOT BE REPRODUCED IN WHOLE OR PART WITHOUT WRITTEN PERMISSION.

FIRE FACILITIES
STEEL FIRE TRAINING TOWERS
FIRE FACILITIES, INC.
314 WILBURN ROAD, SUN PRAIRIE, WI 53590
OFFICE: (608) 327-4100 FAX: (608) 834-1843
TOLL FREE: (800) 929-3726 TOLL FREE FAX: (866) 639-7012
WWW.FIREFACILITIES.COM; INFO@ FIREFACILITIES.COM

Job Description: WESCO MODEL WH-2 CUSTOM WINCHESTER, VA

Sheet Title: BURN ROOM #2 DETAILS

Date:	JANUARY 4, 2019
Drawn by:	KAH
Checked by:	SPW
Scale:	SHOWN
Order No.	FTE-733/#208929
Sheet No.	12 of 25

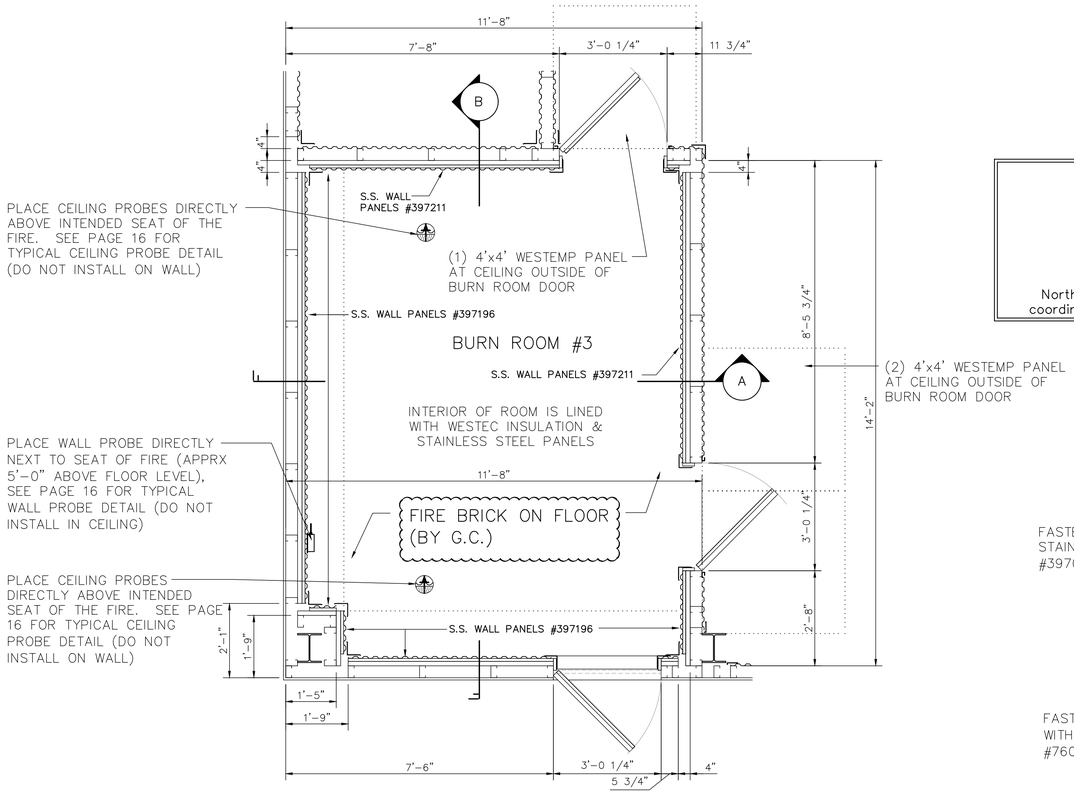

FIRST FLOOR BURN ROOM #3

scale: 1/2" = 1'-0"

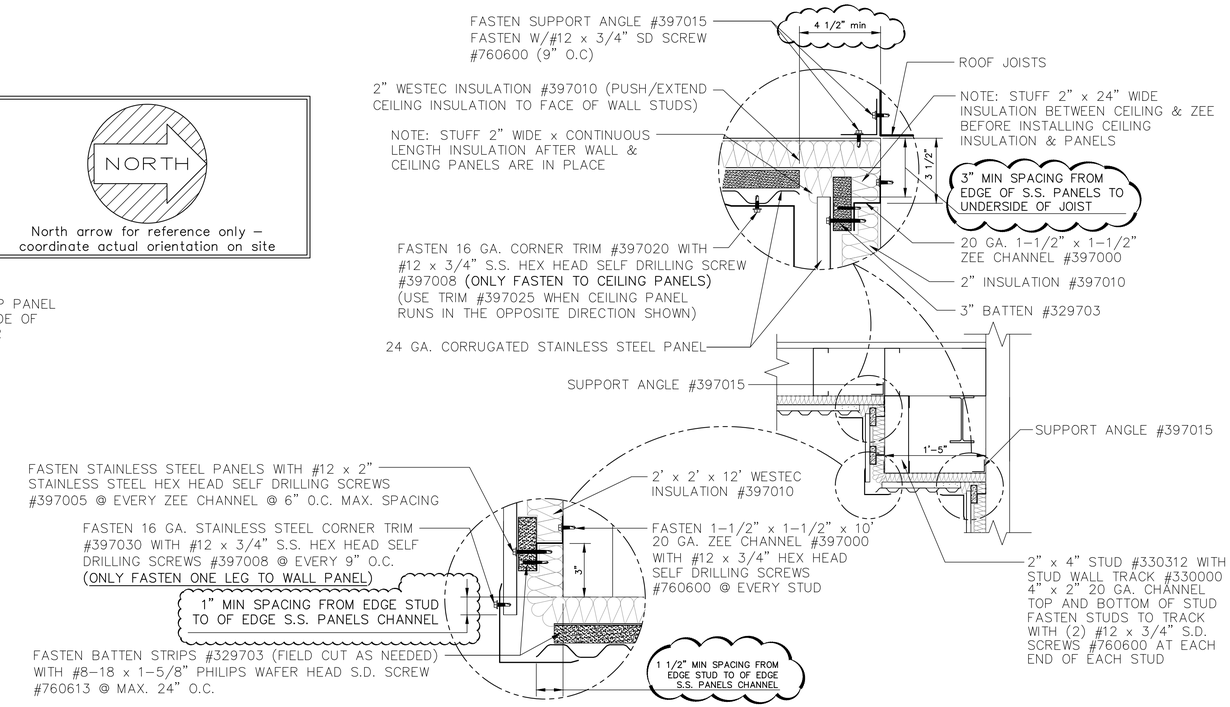

DETAIL "C" SECTION THROUGH BULK HEAD

scale: 1" = 1'-0"

The airborne particulate generated by handling Westec insulation blanket requires the use of appropriate respiratory protection, pursuant to the requirements of OSHA standards 29 CFR 1910-134 and 29 CFF 1926-103, is recommended. Please review the Material Safety Data Sheet prior (located in erection manual) to working with Westec insulation for a complete description of all required protection.

The airborne particulate generated by cutting or trimming Westemp panels requires the use of dust masks such as the 3M 8511 N-95 or equivalent. Please review the Material Safety Data Sheet prior (located in erection manual) to working with Westemp for a complete description of all required protection.

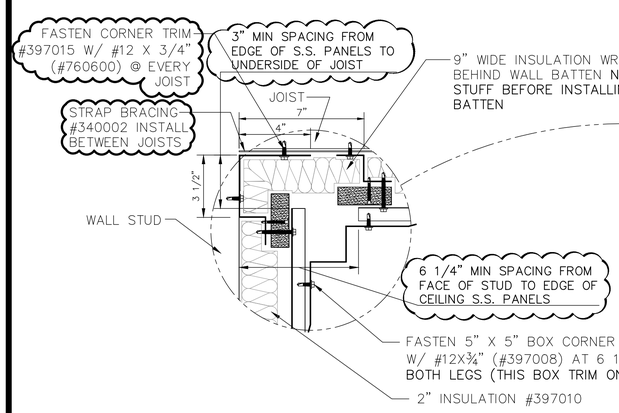

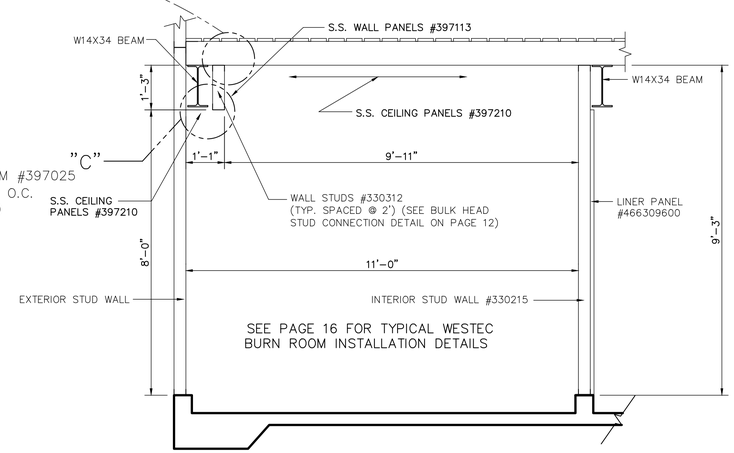

"A" SECTION THRU 1ST FLOOR BURN ROOM #3

scale: 1/2" = 1'-0"

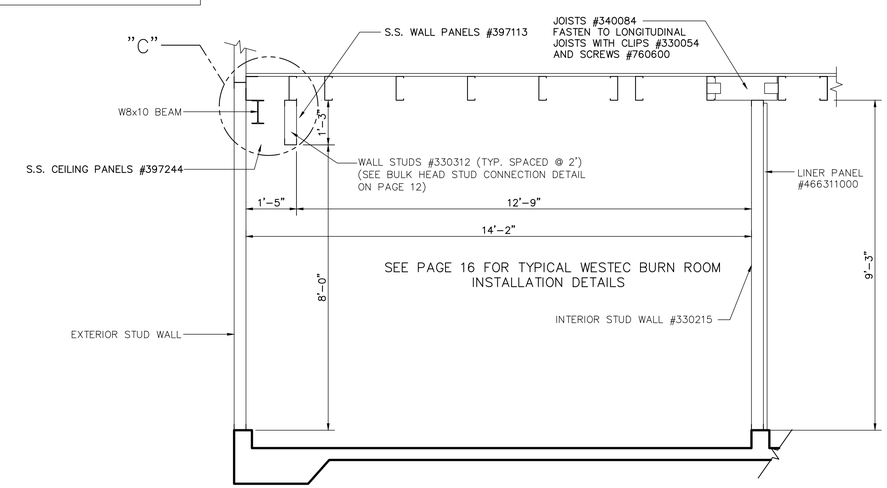

"B" SECTION THRU 1ST FLOOR BURN ROOM #3

scale: 1/2" = 1'-0"

REVISIONS	by

COMMONWEALTH OF VIRGINIA
STEVEN P. WESTRA
Lic. No. 03539
JAN 18 2019
PROFESSIONAL ENGINEER

THIS DRAWING AND ALL PARTS THEREOF IS THE EXCLUSIVE PROPERTY OF FIRE FACILITIES, INC., 314 WILBURN ROAD, SUN PRAIRIE, WI 53590 OFFICE: (608) 327-4100 FAX (608) 834-1843 AND MAY NOT BE REPRODUCED IN WHOLE OR PART WITHOUT WRITTEN PERMISSION.

FIRE FACILITIES
STEEL FIRE TRAINING TOWERS
FIRE FACILITIES, INC.
314 WILBURN ROAD, SUN PRAIRIE, WI 53590
OFFICE: (608) 327-4100 FAX: (608) 834-1843
TOLL FREE: (800) 929-3726 TOLL FREE FAX: (866) 639-7012
WWW.FIREFACILITIES.COM; INFO@ FIREFACILITIES.COM

Job Description: WESCO MODEL WH-2 CUSTOM WINCHESTER, VA

Sheet Title: BURN ROOM #3 DETAILS

Date:	JANUARY 4, 2019
Drawn by:	KAH
Checked by:	
Scale:	SHOWN
Order No.	FTE-733/#208929
Sheet No.	13 of 25

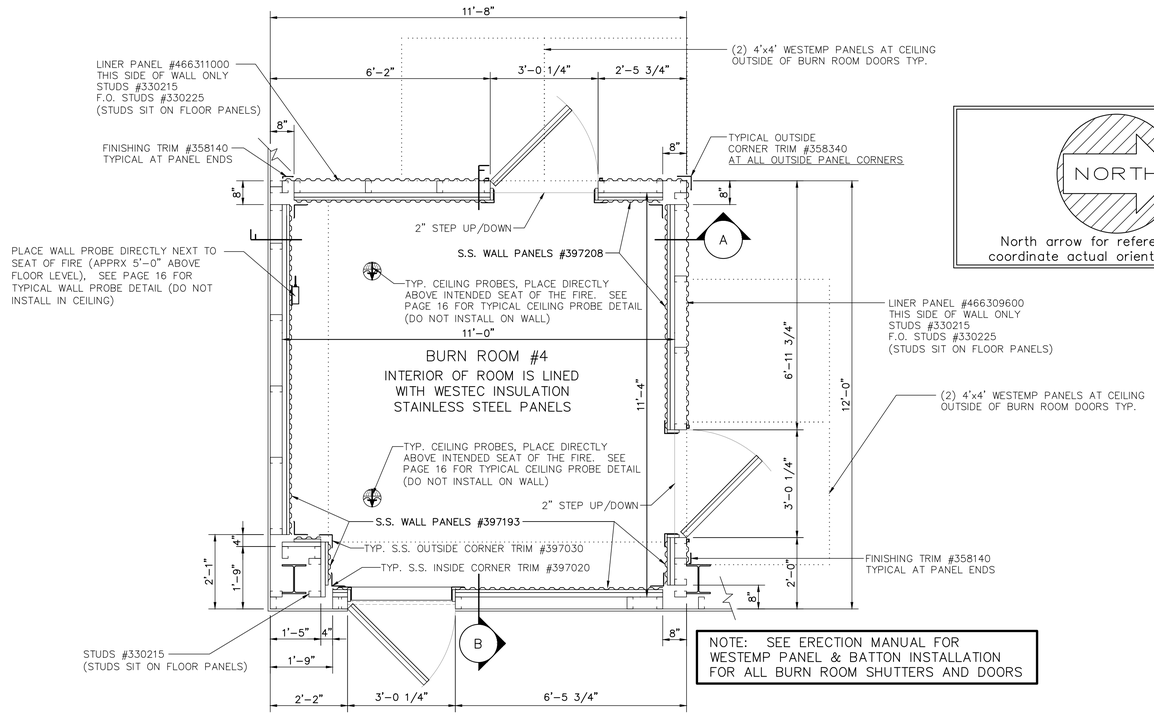

SECOND FLOOR BURN ROOM #4

scale: 1/2" = 1'-0"

The airborne particulate generated by handling Westec insulation blanket requires the use of appropriate respiratory protection, pursuant to the requirements of OSHA standards 29 CFR 1910–134 and 29 CFF 1926–103, is recommended. Please review the Material Safety Data Sheet prior (located in erection manual) to working with Westec insulation for a complete description of all required protection.

The airborne particulate generated by cutting or trimming Westemp panels requires the use of dust masks such as the 3M 8511 N–95 or equivalent. Please review the Material Safety Data Sheet prior (located in erection manual) to working with Westemp for a complete description of all required protection.

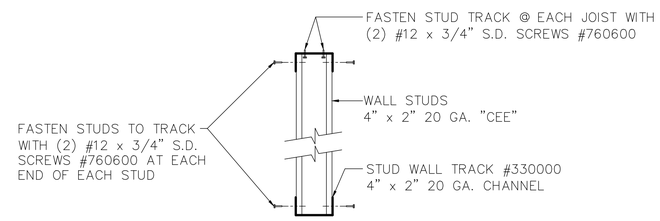

BULK HEAD STUD CONNECTION

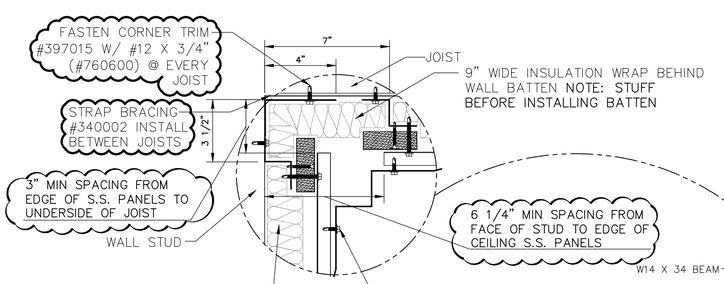

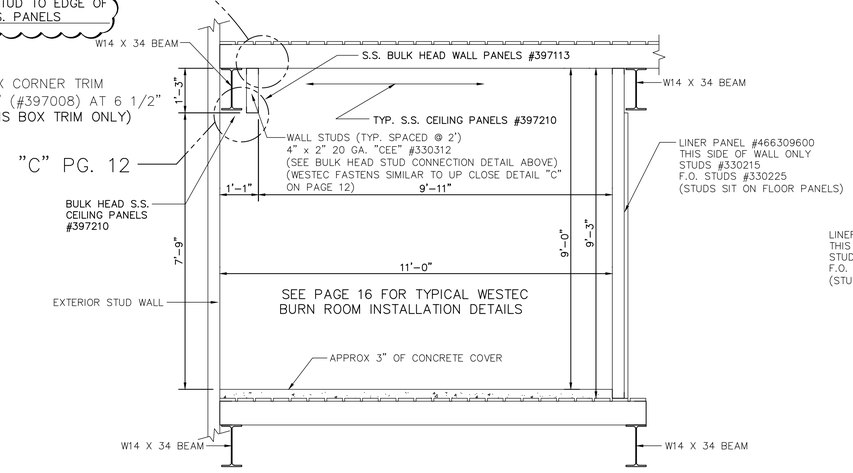

"A" SECTION THRU 2ND FLOOR BURN ROOM #4

scale: 1/2" = 1'-0"

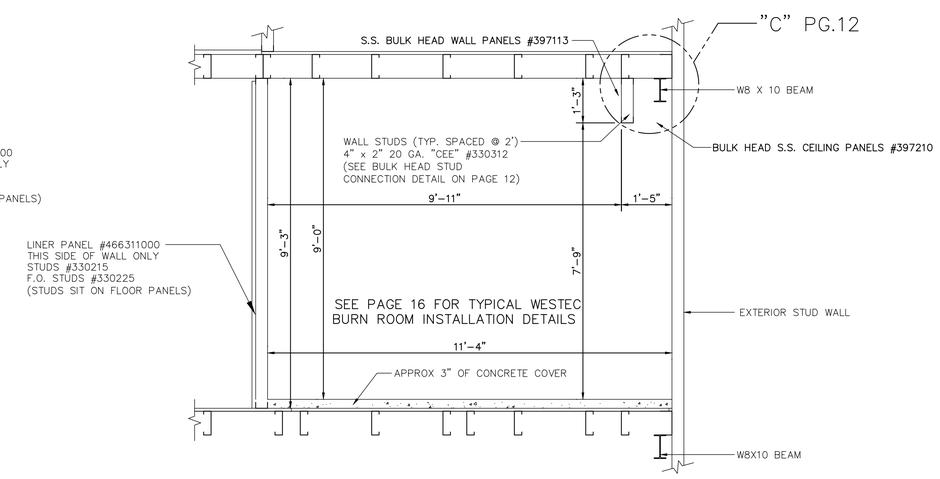

"B" SECTION THRU 2ND FLOOR BURN ROOM #4

scale: 1/2" = 1'-0"

REVISIONS	by

COMMONWEALTH OF VIRGINIA
STEVEN P. WESTRA
Lic. No. 035397
JAN 18 2019
PROFESSIONAL ENGINEER

THIS DRAWING AND ALL PARTS THEREOF IS THE EXCLUSIVE PROPERTY OF FIRE FACILITIES, INC., 314 WILBURN ROAD, SUN PRAIRIE, WI 53590 OFFICE: (608) 327-4100 FAX (608) 834-1843 AND MAY NOT BE REPRODUCED IN WHOLE OR PART WITHOUT WRITTEN PERMISSION.

FIRE FACILITIES
STEEL FIRE TRAINING TOWERS
FIRE FACILITIES, INC.
314 WILBURN ROAD, SUN PRAIRIE, WI 53590
OFFICE: (608) 327-4100 FAX: (608) 834-1843
TOLL FREE: (800) 929-3726 TOLL FREE FAX: (866) 639-7012
WWW.FIREFACILITIES.COM; INFO@ FIREFACILITIES.COM

Job Description: WESCO MODEL WH–2 CUSTOM WINCHESTER, VA

Sheet Title: BURN ROOM #4 DETAILS CONT.

Date:	JANUARY 4, 2019
Drawn by:	KAH
Checked by:	SPW
Scale:	SHOWN
Order No.	FTE–733/#208929
Sheet No.	14 of 25

IMPORTANT NOTE:

1. TEMPERATURES IN THIS AREA SHALL NOT EXCEED 400°F OR PREMATURE DAMAGE TO SURROUNDING MATERIALS MAY RESULT

2. CLOUDED MIN. GAPS MUST BE MAINTAINED THAT ARE SHOWN ON THIS PAGE OR THE BURN ROOM STANDARDS DETAILS PAGE

The airborne particulate generated by handling Westec insulation blanket requires the use of appropriate respiratory protection, pursuant to the requirements of OSHA standards 29 CFR 1910–134 and 29 CFF 1926–103, is recommended. Please review the Material Safety Data Sheet prior (located in erection manual) to working with Westec insulation for a complete description of all required protection.

The airborne particulate generated by cutting or trimming Westemp panels requires the use of dust masks such as the 3M 8511 N–95 or equivalent. Please review the Material Safety Data Sheet prior (located in erection manual) to working with Westemp for a complete description of all required protection.

NOTE: INSTALL WESTEC SYSTEM IN SPOT BURN AREA BEFORE INSTALLING HEADER JOIST

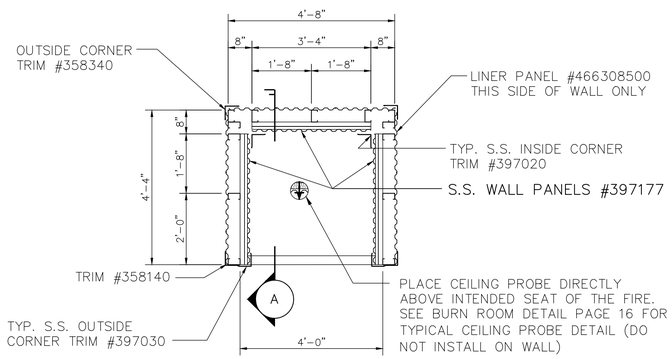

SPOT BURN AREA

SCALE: 1/2" = 1'–0"

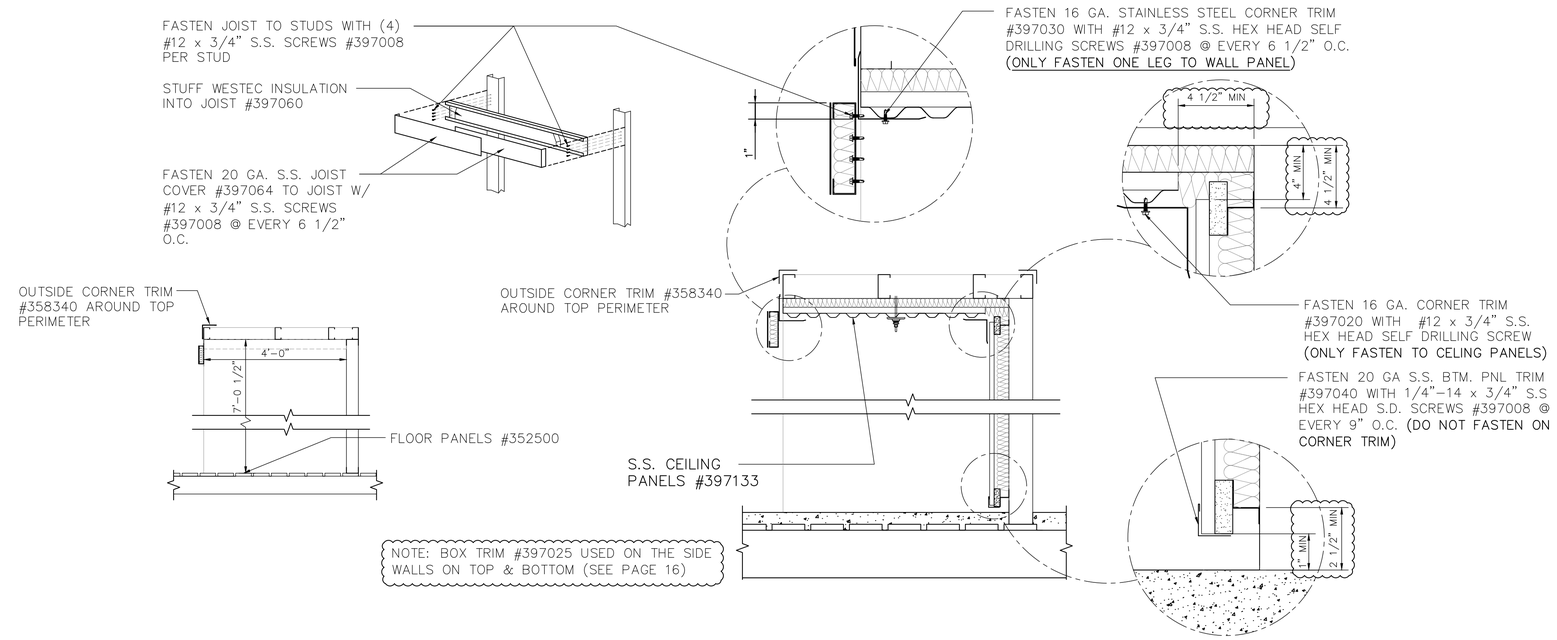

"A" SECTION THRU. SPOT BURN AREA

SCALE: 1/2" = 1'–0"

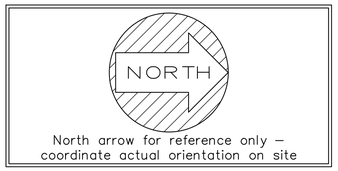

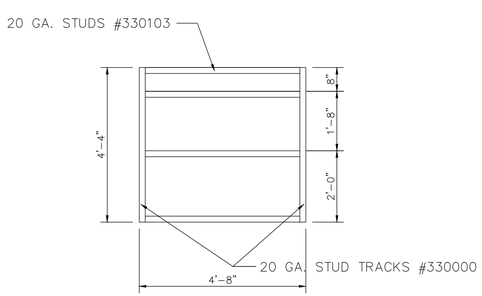

CEILING STUD LAYOUT

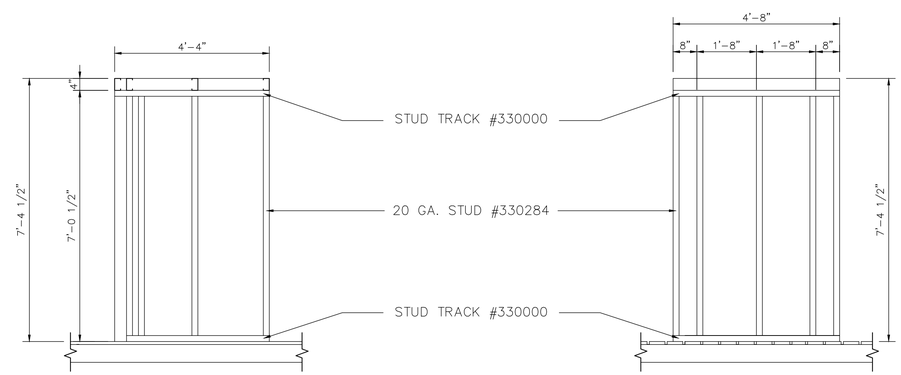

NORTH SIDE STUD ELEVATION

EAST END STUD ELEVATION

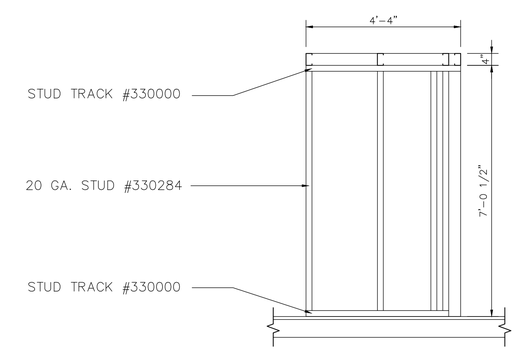

SOUTH SIDE STUD ELEVATION

NOTE: SEE WESTEC DETAILS ON PAGE 16 (FASTEN WESTEC IN SPOT BURN IN SIMILAR MANNER)

REVISIONS	by

COMMONWEALTH OF VIRGINIA
STEVEN P. WESTRA
Lic. No. 03397
JAN 18 2019
PROFESSIONAL ENGINEER

THIS DRAWING AND ALL PARTS THEREOF IS THE EXCLUSIVE PROPERTY OF FIRE FACILITIES, INC., 314 WILBURN ROAD, SUN PRAIRIE, WI 53590 OFFICE: (608) 327-4100 FAX (608) 834-1843 AND MAY NOT BE REPRODUCED IN WHOLE OR PART WITHOUT WRITTEN PERMISSION.

FIRE FACILITIES
STEEL FIRE TRAINING TOWERS
FIRE FACILITIES, INC.
314 WILBURN ROAD, SUN PRAIRIE, WI 53590
OFFICE: (608) 327-4100 FAX: (608) 834-1843
TOLL FREE: (800) 929-3726 TOLL FREE FAX: (866) 639-7012
WWW.FIREFACILITIES.COM; INFO@ FIREFACILITIES.COM

Job Description: WESCO MODEL WH–2 CUSTOM WINCHESTER, VA

Sheet Title: SPOT BURN DETAILS

Date:	JANUARY 4, 2019
Drawn by:	KAH
Checked by:	SPW
Scale:	SHOWN
Order No.	FTE–733/#208929
Sheet No.	15 of 25

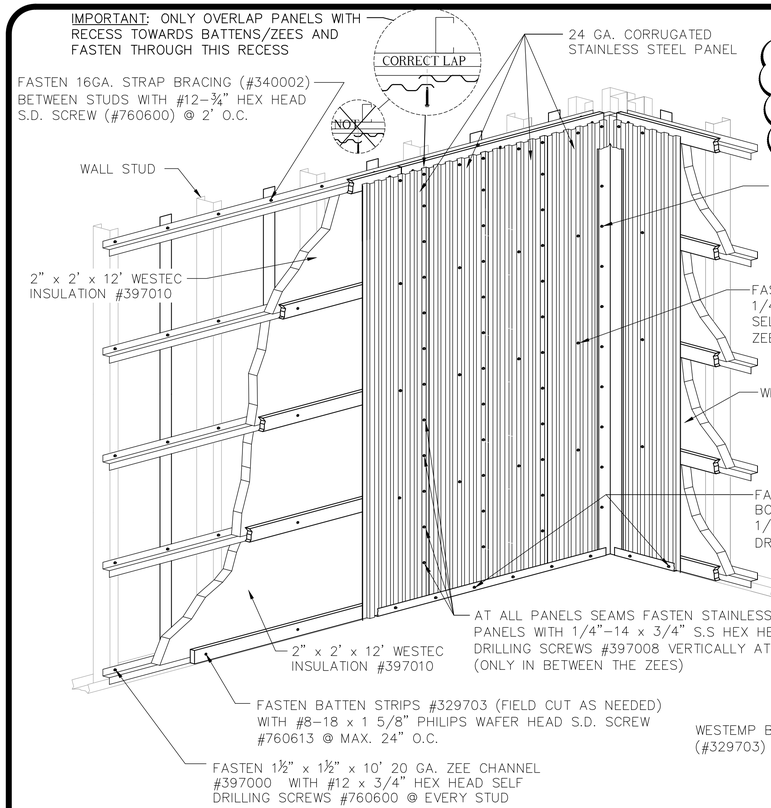

ISOMERIC VIEW OF TYPICAL WALL & CORNER DETAIL

SCALE: 3/4" = 1'–0"

IMPORTANT NOTES:
1. CEILING PANELS FASTEN EXACTLY THE SAME AS WALL PANELS.
2. **ALL MIN GAPS SHOWN ON THIS PAGE MUST BE HELD TO ENSURE PANELS CAN EXPAND & CONTRACT TO PREVENT PREMATURE DAMAGE.**
3. Zee CHANNEL AND STRAP BRACING SHOULD ONLY BE FASTENED WITH **NON** STAINLESS STEEL SCREWS (#760600). ONLY SCREWS DIRECTLY EXPOSED TO DIRECT FLAMES SHOULD BE STAINLESS STEEL (#397008 OR 397005)

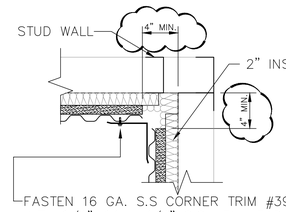

PLAN VIEW OF TYPICAL WALL CORNER

SCALE: 3" = 1'–0"

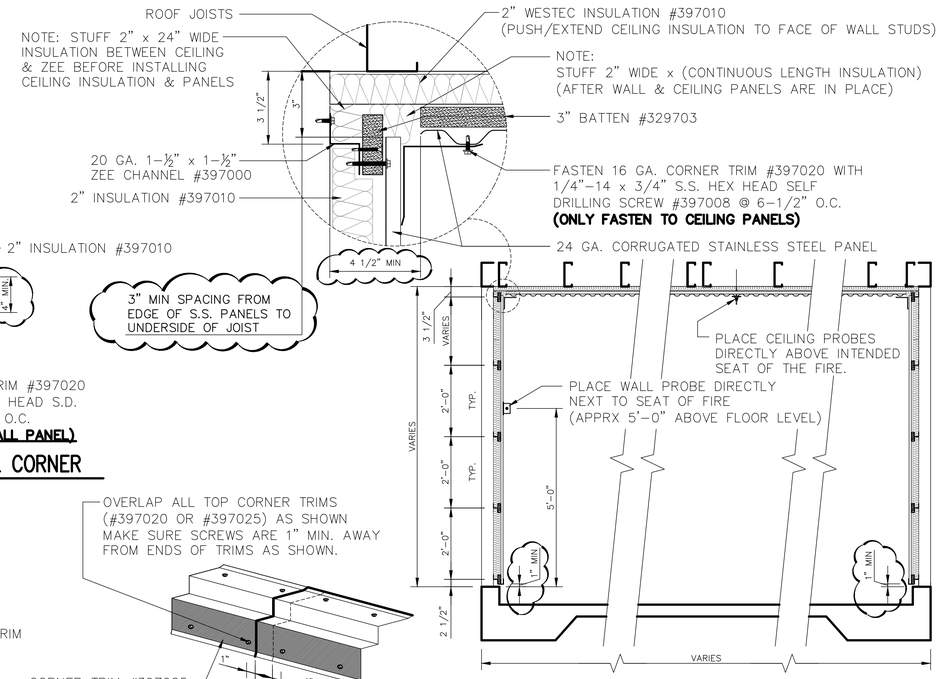

"A" SECTION THRU BURN ROOM

SCALE: 1/2" = 1'–0"

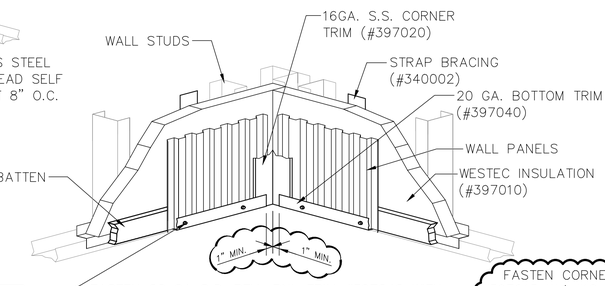

TYPICAL WALL BOTTOM CORNER DETAILS

SCALE: 3" = 1'–0"

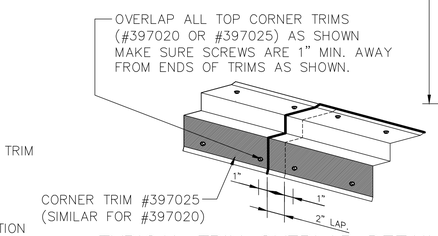

TYPICAL TRIM OVERLAP DETAIL

SCALE: 1 1/2" = 1'–0"

IMPORTANT NOTE:
SANDWICH PROBE WITH 1" WESTEC INSULATION (PEEL 2" INSULATION #397010 IN HALF) HALF OF INSULATION ON BOTTOM OF PAN, PLACE WIRE AND COVER EXPOSED WIRE TOP WITH REMAINING HALF OF INSULATION THEN PLACE COVER.

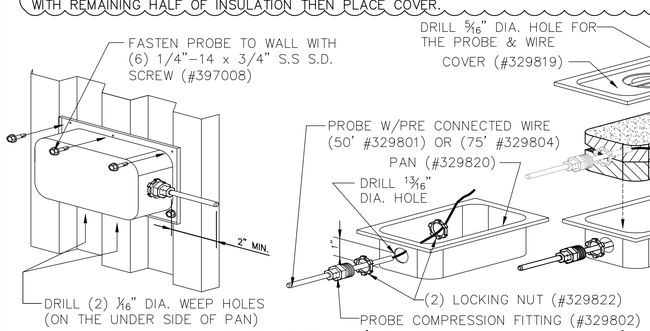

TYPICAL WALL PROBE DETAIL (DO NOT INSTALL IN CEILING)

SCALE: 3" = 1'–0"

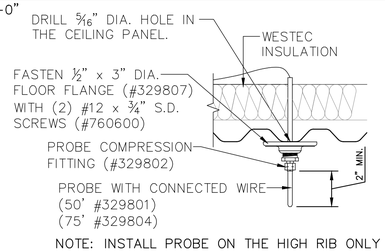

NOTE: INSTALL PROBE ON THE HIGH RIB ONLY

TYPICAL CEILING PROBE DETAIL (DO NOT INSTALL ON WALL)

SCALE: 3" = 1'–0"

TRIMS AT THE TOP OF WALL PANELS ARE EITHER BOX OR 90 DEGREES AS SHOWN BELOW – **RULES OF THUMB: 1) ENDS OF CEILING PANELS ONLY USE BOX CORNER TRIMS. 2) SIDES OF CEILING PANELS ONLY USE 90 CORNER TRIMS.**

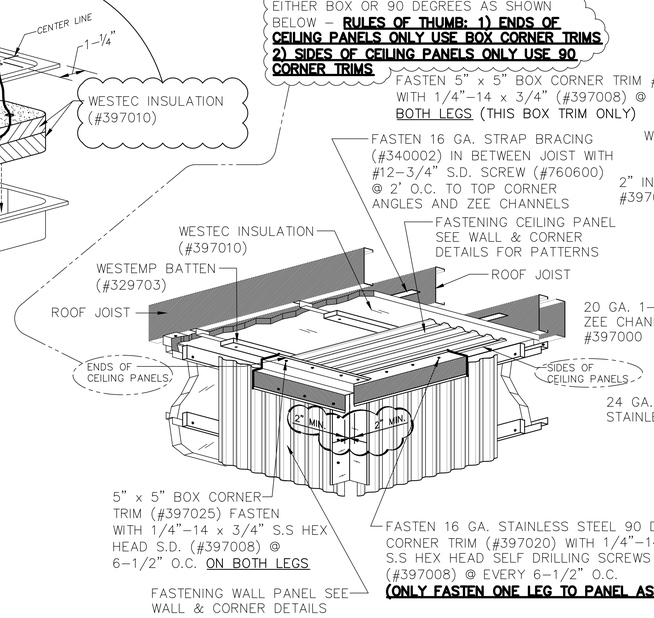

TYPICAL WALL TOP CORNER DETAILS

SCALE: 3" = 1'–0"

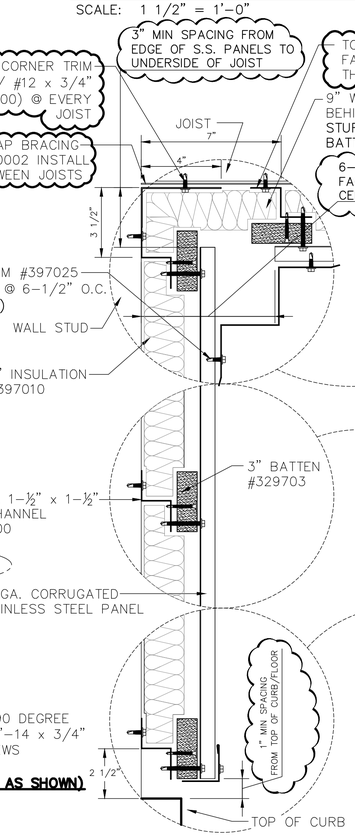

INSTALLATION PROCEDURE

1. INSTALL BURN SUPPORT ANGLE (#397015) AT THE CEILING/WALL CORNER BUT ONLY IN CORNERS WHERE A BOX TRIM WILL BE LOCATED (SEE SECTION "B" UPPER DETAILS)
2. INSTALL ALL (ZEE) CHANNELS FACING IN THE SAME DIRECTION. **EXCEPT THE (ZEE) CHANNELS RIGHT NEXT TO THE WALLS. TOP LEG NEEDS TO FACE THE WALL** (SEE DETAILS)
3. INSTALL ALL STRAP BRACING @ 2'–0" O.C. MAX. TO SUPPORT INSULATION ON WALLS & CEILING
4. INSTALL/RUN ALL THERMOCOUPLE WIRES.
5. INSTALL ALL INSULATION WALLS & CEILINGS.
6. INSTALL ALL 3" WESTEMP BATTENS.
7. INSTALL ALL WALL & CEILING PANELS.
8. INSTALL ALL 16 GA. VERTICAL INSIDE CORNER TRIMS.
9. INSTALL ALL BOTTOM TRIM. (SEE DETAILS)
10. INSTALL ALL 16 GA. HORIZONTAL INSIDE CORNER TRIMS. (SEE DETAILS)
11. INSTALL ALL 20 GA. HORIZONTAL INSIDE BOX CORNER TRIM. (SEE DETAILS)
12. INSTALL ALL 16 GA. OUTSIDE CORNER TRIM AROUND DOOR & WINDOWS.

DAMAGE TO THE WESTEC SYSTEM CAUSED BY: THE MOUNTING OR PENETRATION OF EQUIPMENT (NOT SUPPLIED BY FFI) WHICH IMPEDES THE MOVEMENT OF THE LINER SYSTEM, OR THE FAILURE TO MONITOR TEMPERATURES AT THE BURN ROOM CEILING, IS NOT COVERED BY THE LIMITED WARRANTY – SEE GUIDELINES IN ERECTION MANUAL.

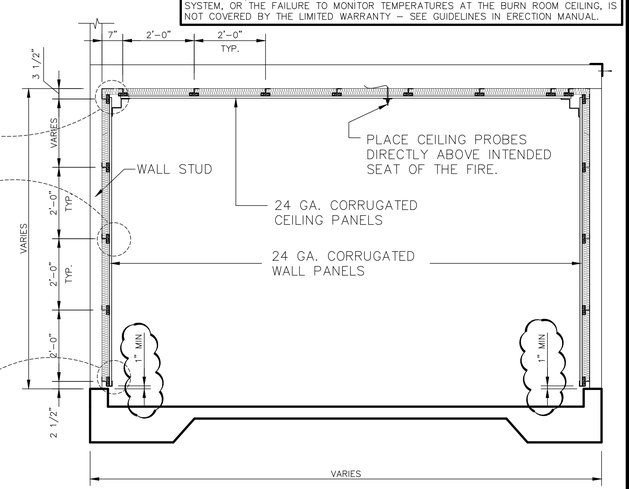

"B" SECTION THRU BURN ROOM ROOF

SCALE: 1/2" = 1'–0"

REVISIONS	by

COMMONWEALTH OF VIRGINIA
STEVEN P. WESTRA
Lic. No. 03397
JAN 18 2019
PROFESSIONAL ENGINEER

THIS DRAWING AND ALL PARTS THEREOF IS THE EXCLUSIVE PROPERTY OF FIRE FACILITIES, INC., 314 WILBURN ROAD, SUN PRAIRIE, WI 53590 OFFICE: (608) 327-4100 FAX (608) 834-1843 AND MAY NOT BE REPRODUCED IN WHOLE OR PART WITHOUT WRITTEN PERMISSION.

FIRE FACILITIES
STEEL FIRE TRAINING TOWERS
FIRE FACILITIES, INC.
314 WILBURN ROAD, SUN PRAIRIE, WI 53590
OFFICE: (608) 327-4100 FAX: (608) 834-1843
TOLL FREE: (800) 929-3726 TOLL FREE FAX: (866) 639-7012
WWW.FIREFACILITIES.COM; INFO@ FIREFACILITIES.COM

Job Description	WESCO MODEL WH–2 CUSTOM WINCHESTER, VA
Sheet Title	WESTEC BURN ROOM DETAILS
Date	JANUARY 4, 2019
Drawn by	KAH
Checked by	SPW
Scale	SHOWN
Order No.	FTE–733/#208929
Sheet No.	16 of 25

NOTE: WHEN FASTENING THE WESTEMP INSULATION PANEL, **DO NOT OVER TIGHTEN THE SCREWS.** A SLIGHT MOVEMENT OF THE PLATE WASHER UNDER THE SCREW HEAD IS DESIRABLE.

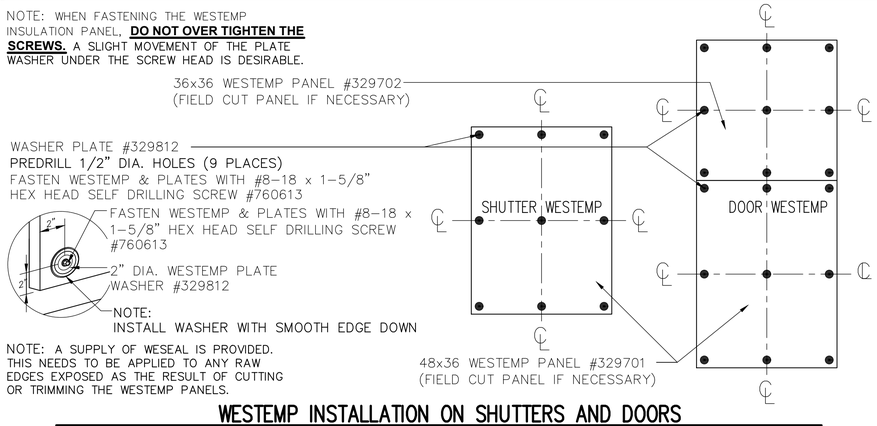

NOTE: A SUPPLY OF WESEAL IS PROVIDED. THIS NEEDS TO BE APPLIED TO ANY RAW EDGES EXPOSED AS THE RESULT OF CUTTING OR TRIMMING THE WESTEMP PANELS.

WESTEMP INSTALLATION ON SHUTTERS AND DOORS

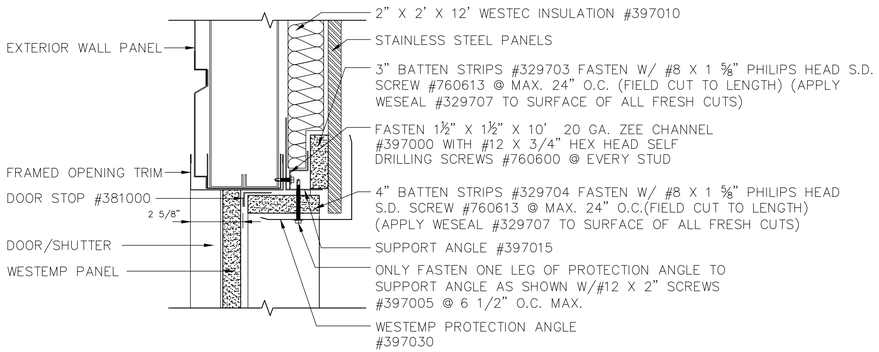

SECTION THRU. HEADER
(DOOR & WINDOWS)

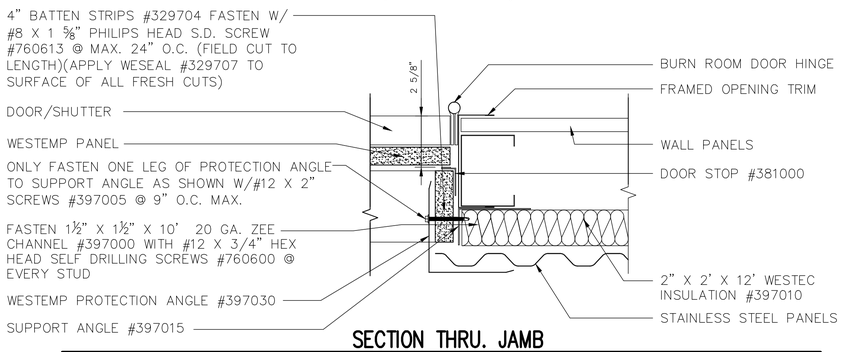

SECTION THRU. JAMB
(DOOR & WINDOWS)

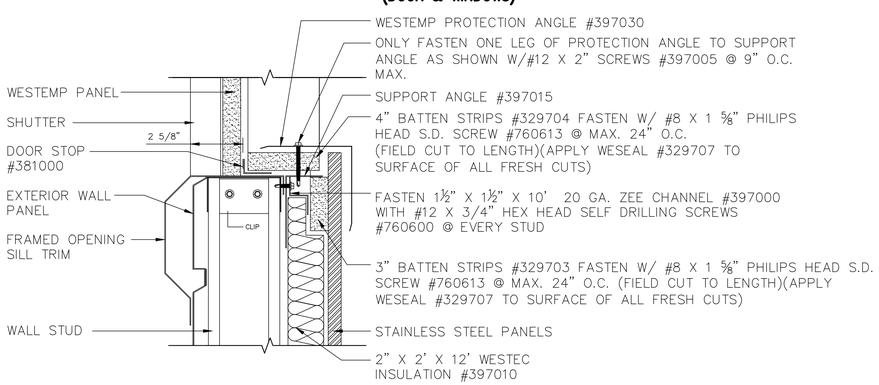

SECTION THRU. SILL

NOTE: 1. ALL WIRE, WIRE NUTS, GROMMETS, SCREWS, AND CONDUIT BY OTHERS.
2. 120 VAC ELECTRICAL SERVICE AND COMPONENT ASSEMBLY REQUIRED.
3. FOLLOW LOCAL CODE REQUIREMENTS FOR ASSEMBLY/INSTALLATION.
4. FOR FURTHER INSTALLATION INSTRUCTIONS PLEASE REFERENCE THE PYROMETER MANUAL.

NOTE: INSTALL PROBE WIRES BEHIND WESTEC INSULATION *(DO NOT EXPOSE WIRE TO OPEN HEAT AND FLAMES)* ALSO DO NOT INSTALL PYROMETER INSIDE OF BURN ROOM

TROUBLE SHOOTING GUIDE – WHEN TESTING/HEATING THERMOCOUPLES
(AFTER INSTALLATION; TEST INDIVIDUAL THERMOCOUPLES BY HEATING EACH ONE WITH A LIGHTER OR HEAT GUN & OBSERVING EACH READING ON THE PYROMETER)

POTENTIAL PROBLEM	SOLUTION
1. TEMPERATURE READING IS NEGATIVE VALUE	1. ENSURE RED & YELLOW WIRES ARE NOT REVERSED
2. TEMPERATURE READING DOES NOT INCREASE OR INCREASES VERY SLOWLY	2. ENSURE THAT RED & YELLOW WIRES ARE NOT CROSSED AND/OR NOT TOUCHING EACH OTHER
3. TEMPERATURE READINGS APPEAR & DISAPPEAR INTERMITTENTLY	3. ENSURE THAT NO STAINLESS STEEL SHEATHING IS VISIBLE IN THE ENCLOSURE WHICH MAY SHORT OUT THE SYSTEM

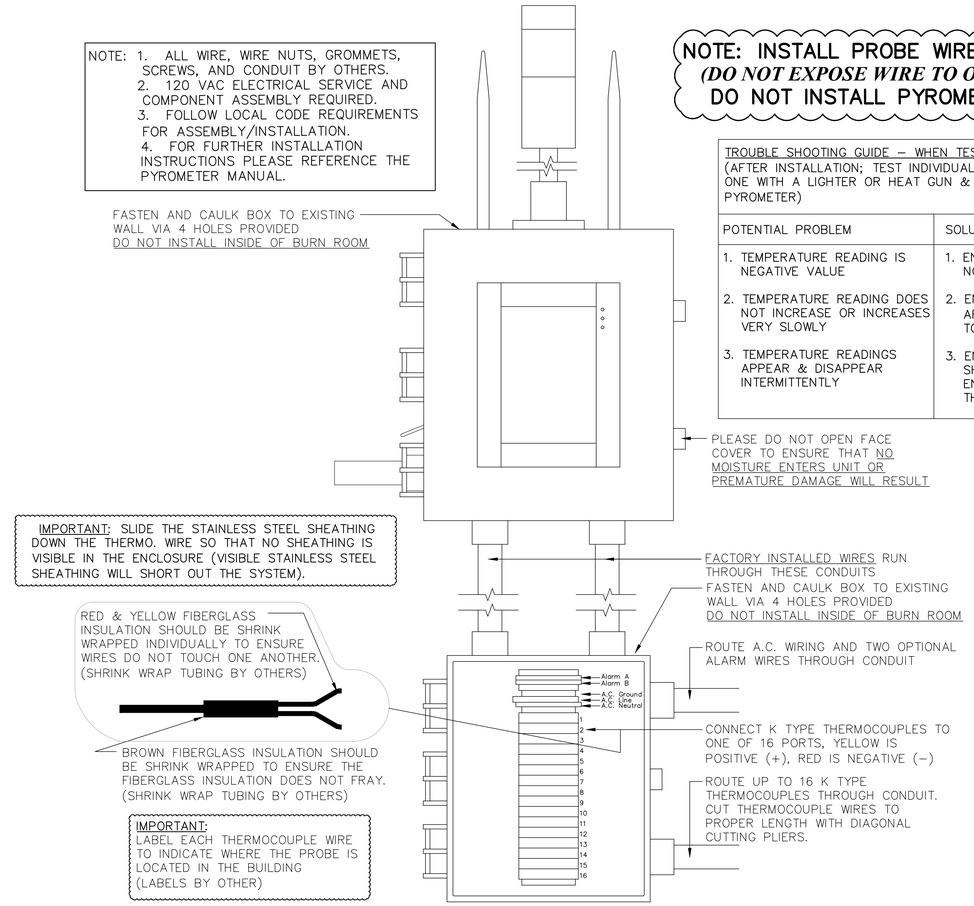

IMPORTANT: SLIDE THE STAINLESS STEEL SHEATHING DOWN THE THERMO. WIRE SO THAT NO SHEATHING IS VISIBLE IN THE ENCLOSURE (VISIBLE STAINLESS STEEL SHEATHING WILL SHORT OUT THE SYSTEM).

IMPORTANT:
LABEL EACH THERMOCOUPLE WIRE TO INDICATE WHERE THE PROBE IS LOCATED IN THE BUILDING (LABELS BY OTHER)

WATCHMAN/PYROMETER INSTALL

SCALE: 8x

NOTE: 1. ALL WIRE, WIRE NUTS, GROMMETS, SCREWS, AND CONDUIT BY OTHERS.
2. 120 VAC ELECTRICAL SERVICE AND COMPONENT ASSEMBLY REQUIRED.
3. FOLLOW LOCAL CODE REQUIREMENTS FOR ASSEMBLY/INSTALLATION.

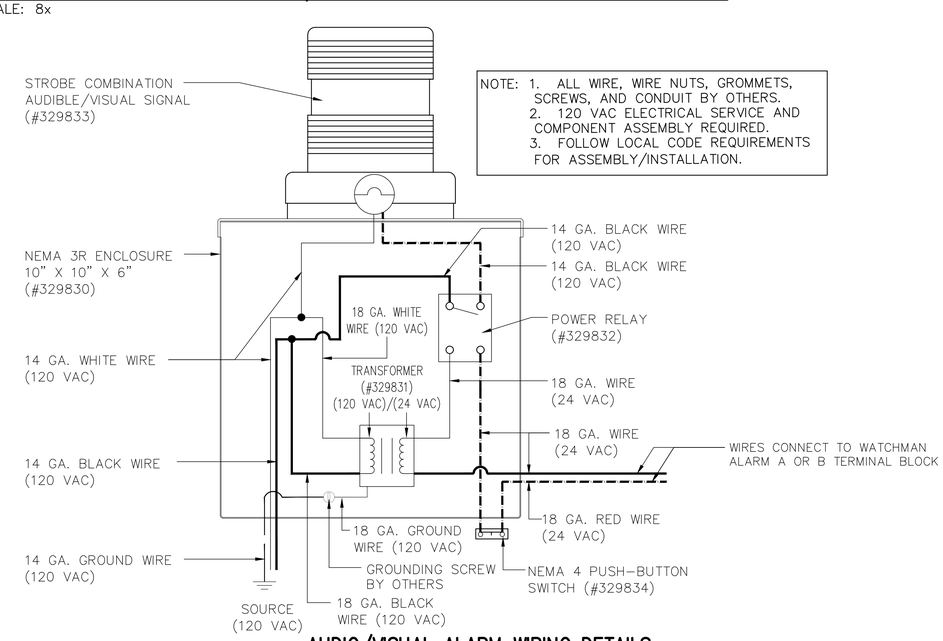

AUDIO/VISUAL ALARM WIRING DETAILS

SCALE: 8x

REVISIONS	by

COMMONWEALTH OF VIRGINIA
STEVEN P. WESTRA
Lic. No. 03397
JAN 18 2019
PROFESSIONAL ENGINEER

THIS DRAWING AND ALL PARTS THEREOF IS THE EXCLUSIVE PROPERTY OF FIRE FACILITIES, INC., 314 WILBURN ROAD, SUN PRAIRIE, WI 53590 OFFICE: (608) 327-4100 FAX (608) 834-1843 AND MAY NOT BE REPRODUCED IN WHOLE OR PART WITHOUT WRITTEN PERMISSION.

FIRE FACILITIES
STEEL FIRE TRAINING TOWERS
FIRE FACILITIES, INC.
314 WILBURN ROAD, SUN PRAIRIE, WI 53590
OFFICE: (608) 327-4100 FAX: (608) 834-1843
TOLL FREE: (800) 929-3726 TOLL FREE FAX: (866) 639-7012
WWW.FIREFACILITIES.COM; INFO@ FIREFACILITIES.COM

Job Description: WESCO MODEL WH-2 CUSTOM WINCHESTER, VA

Sheet Title: WESTEC BURN ROOM DETAILS CONT.

Date	JANUARY 4, 2019
Drawn by	KAH
Checked by	SW
Scale	SHOWN
Order No.	FTE-733/#208929
Sheet No.	17 of 25

NOTE: FRAMED OPENING FRAMING WILL REQUIRE SOME FIELD CUTTING

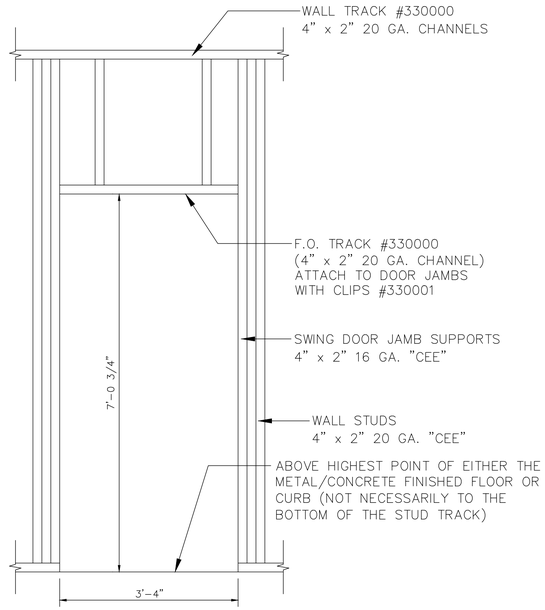

TYPICAL TOWER SWING DOOR FRAMED OPENING ELEVATION

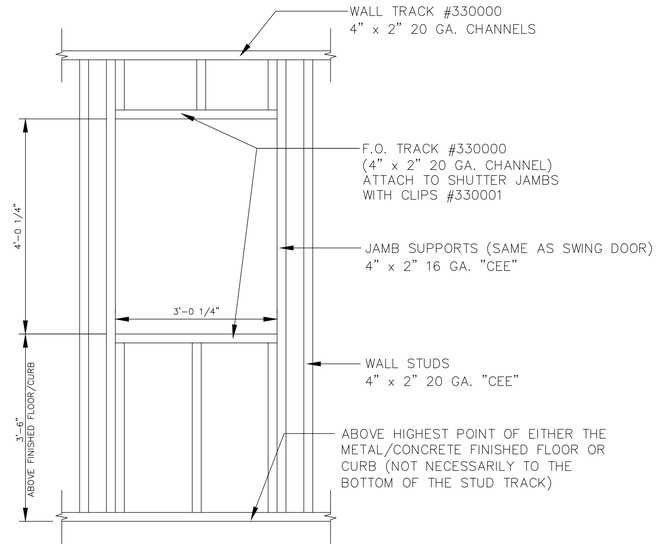

TYPICAL TOWER WINDOW/SHUTTER FRAMED OPENING ELEVATION

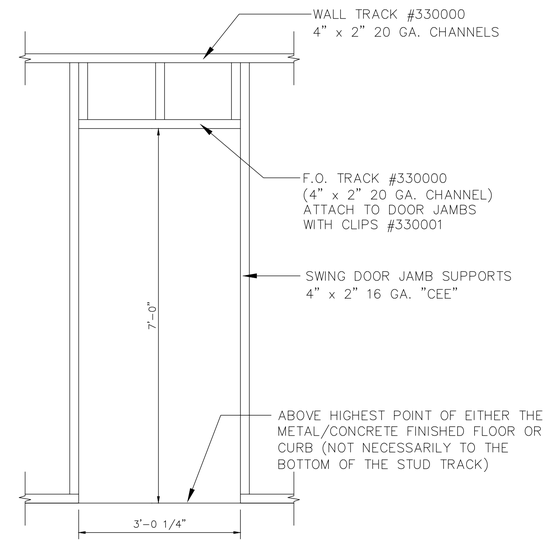

2ND FLOOR BURN ROOM SWING DOOR FRAMED OPENING ELEVATION

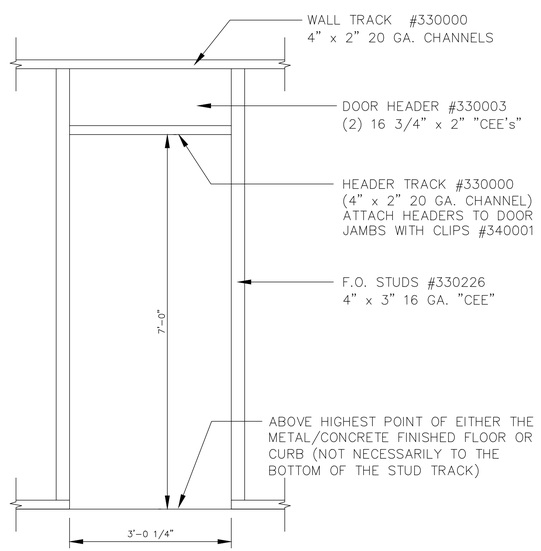

ANNEX (BURN ROOM) SWING DOOR FRAMED OPENING ELEVATION

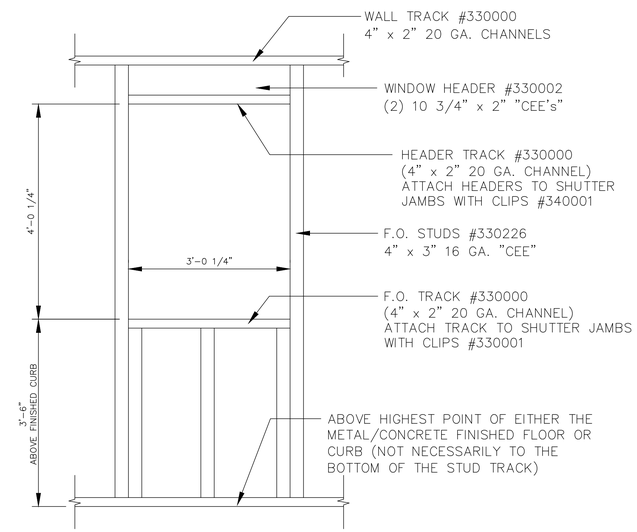

TYPICAL ANNEX BURN ROOM WINDOW/SHUTTER FRAMED OPENING ELEVATION

REVISIONS	by

COMMONWEALTH OF VIRGINIA
STEVEN P. WESTRA
Lic. No. 035397
JAN 18 2019
PROFESSIONAL ENGINEER

THIS DRAWING AND ALL PARTS THEREOF IS THE EXCLUSIVE PROPERTY OF FIRE FACILITIES, INC., 314 WILBURN ROAD, SUN PRAIRIE, WI 53590 OFFICE: (608) 327-4100 FAX (608) 834-1843 AND MAY NOT BE REPRODUCED IN WHOLE OR PART WITHOUT WRITTEN PERMISSION.

FIRE FACILITIES
STEEL FIRE TRAINING TOWERS
FIRE FACILITIES, INC.
314 WILBURN ROAD, SUN PRAIRIE, WI 53590
OFFICE: (608) 327-4100 FAX: (608) 834-1843
TOLL FREE: (800) 929-3726 TOLL FREE FAX: (866) 639-7012
WWW.FIREFACILITIES.COM; INFO@ FIREFACILITIES.COM

Job Description: WESCO MODEL WH-2
CUSTOM
WINCHESTER, VA

Sheet Title: MISC. DETAILS

Date	JANUARY 4, 2019
Drawn by	KAH
Checked by	SPW
Scale	SHOWN
Order No.	FTE-733/#208929
Sheet No.	18 of 25

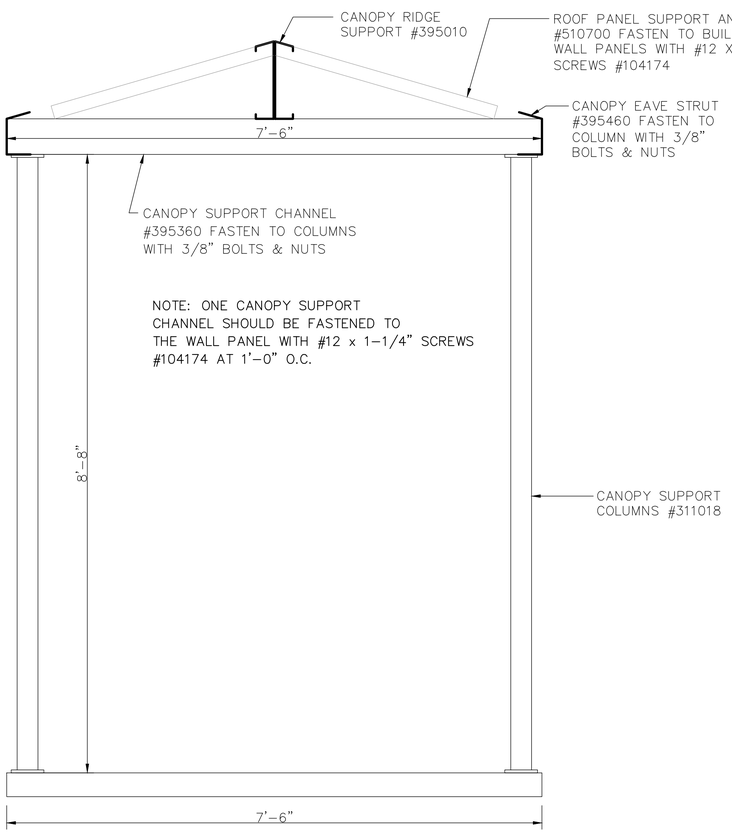

CANOPY FRAMING DETAIL

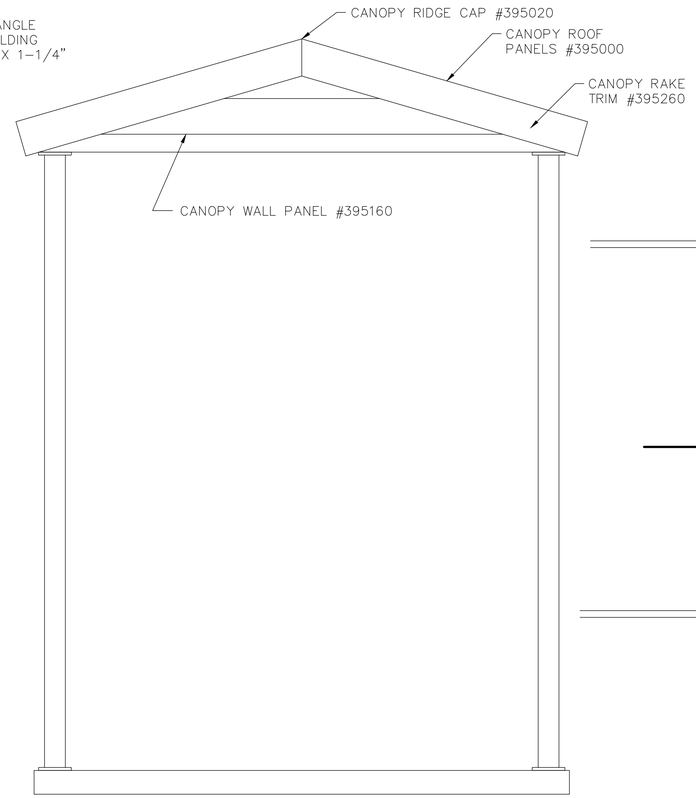

CANOPY ELEVATION

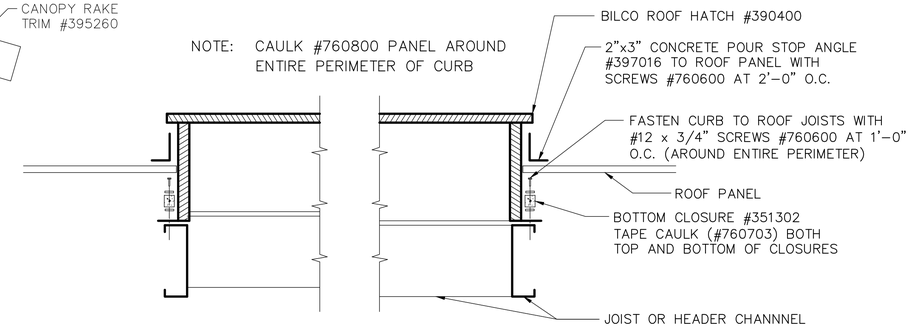

BILCO HATCH INSTALLATION DETAIL (EXTERIOR)

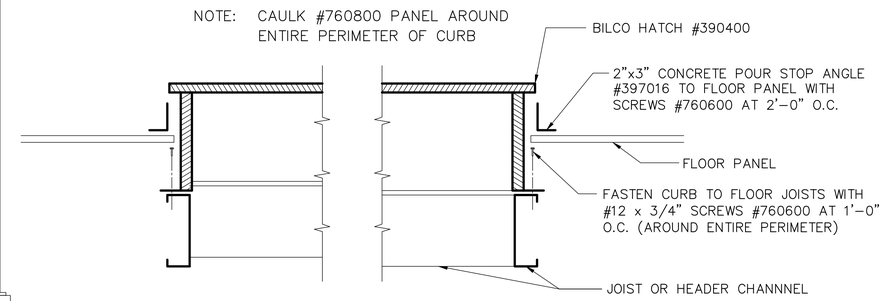

BILCO HATCH INSTALLATION DETAIL (INTERIOR)

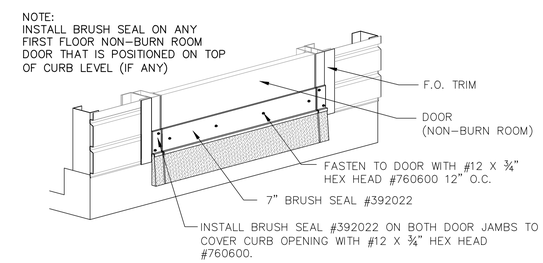

TYPICAL NON-BURN DOOR BRUSH SEAL DETAIL

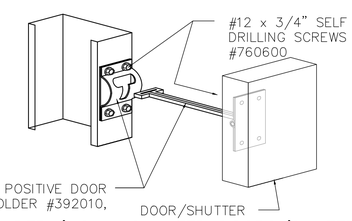

DOOR HOLDER (NON INSULATED DOORS/SHUTTERS ONLY)

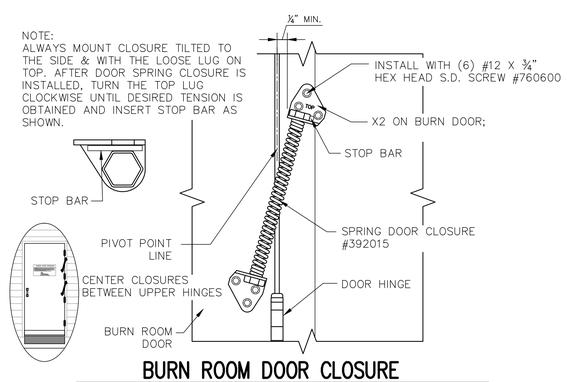

BURN ROOM DOOR CLOSURE

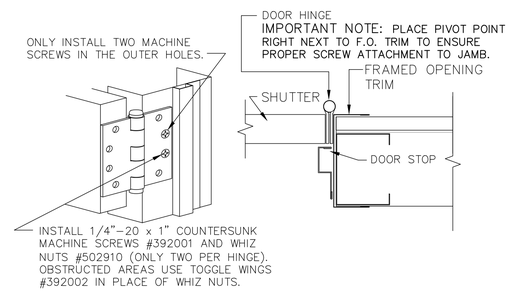

SWING OUT SECTION VIEW OF NONBURN ROOM JAMB

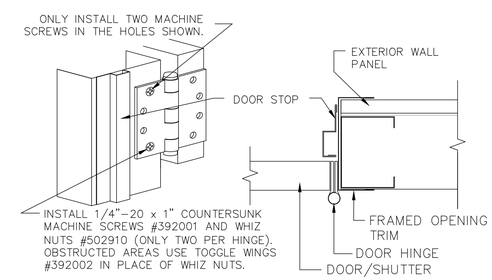

SWING IN SECTION VIEW OF NONBURN ROOM JAMB

REVISIONS	by

THIS DRAWING AND ALL PARTS THEREOF IS THE EXCLUSIVE PROPERTY OF FIRE FACILITIES, INC., 314 WILBURN ROAD, SUN PRAIRIE, WI 53590 OFFICE: (608) 327-4100 FAX (608) 834-1843 AND MAY NOT BE REPRODUCED IN WHOLE OR PART WITHOUT WRITTEN PERMISSION.

FIRE FACILITIES
STEEL FIRE TRAINING TOWERS
FIRE FACILITIES, INC.
314 WILBURN ROAD, SUN PRAIRIE, WI 53590
OFFICE: (608) 327-4100 FAX: (608) 834-1843
TOLL FREE: (800) 929-3726 TOLL FREE FAX: (866) 639-7012
WWW.FIREFACILITIES.COM; INFO@ FIREFACILITIES.COM

Job Description: WESCO MODEL WH-2 CUSTOM WINCHESTER, VA

Sheet Title: MISC. DETAILS CONT.

Date:	JANUARY 4, 2019
Drawn by:	KAH
Checked by:	SPW
Scale:	SHOWN
Order No.	FTE-733/#208929
Sheet No.	19 of 25

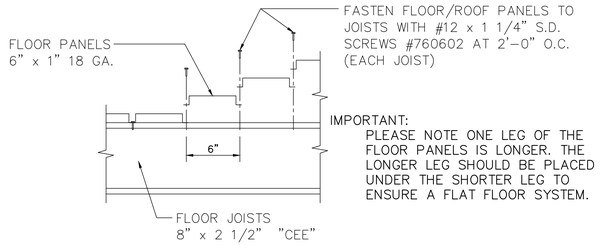

TYPICAL FLOOR PANEL FASTENING DETAIL

scale: 1 1/2" = 1'-0"

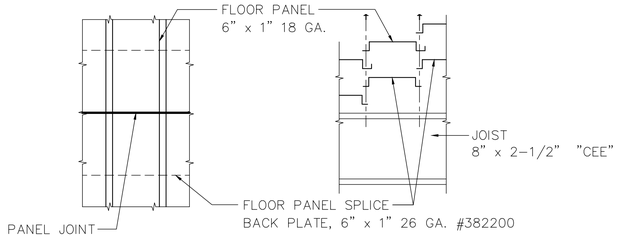

FLOOR PANEL SPLICE PLATE

scale: 1 1/2" = 1'-0"

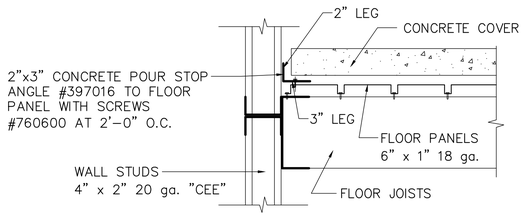

TYPICAL FLOOR EDGE TRIM DETAIL

scale: 1 1/2" = 1'-0"

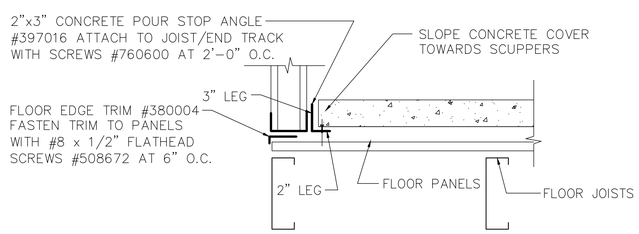

ENCLOSED STAIR OPENING DETAIL

scale: 1 1/2" = 1'-0"

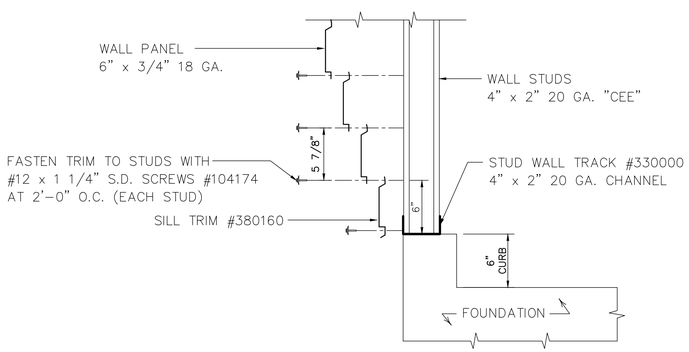

TYPICAL SILL DETAIL

scale: 1 1/2" = 1'-0"

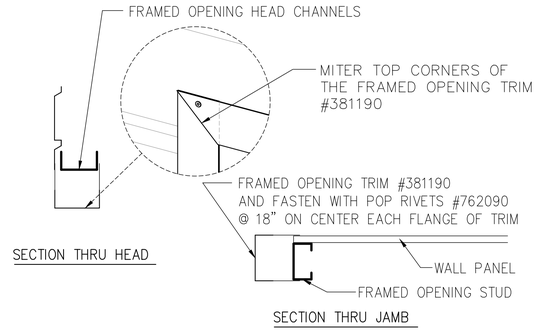

TOWER SWING DOOR TRIM DETAILS

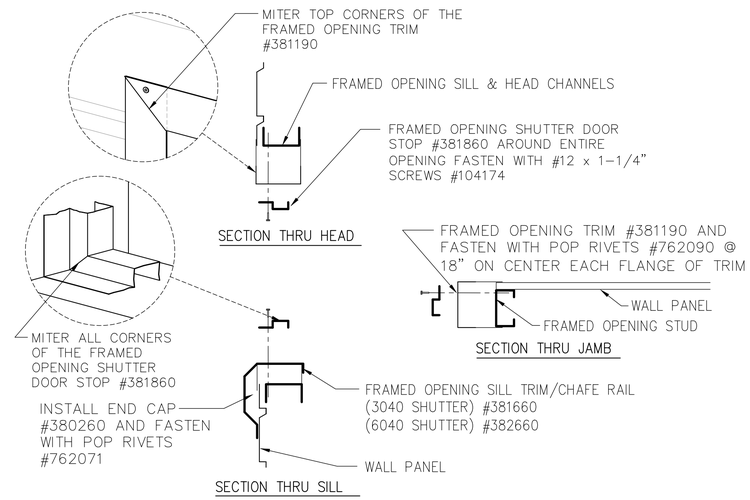

TOWER SHUTTER TRIM DETAILS (SHUTTERS THAT SWING IN)

scale: 1 1/2" = 1'-0"

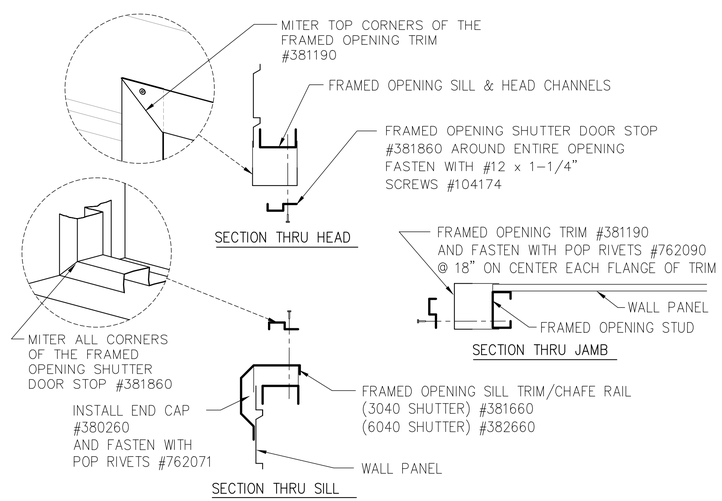

TOWER SHUTTER TRIM DETAILS (SHUTTERS THAT SWING OUT)

scale: 1 1/2" = 1'-0"

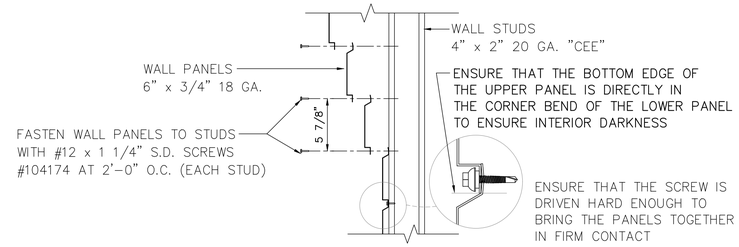

TYPICAL WALL PANEL FASTENING DETAIL

scale: 1 1/2" = 1'-0"

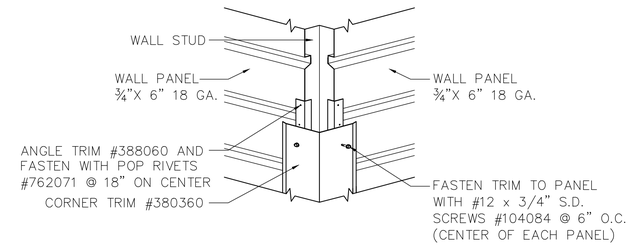

TYPICAL EXTERIOR CORNER TRIM DETAIL

scale: 1 1/2" = 1'-0"

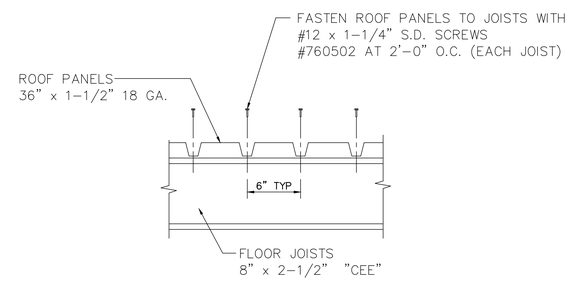

TYPICAL ROOF PANEL FASTENING DETAIL

scale: 1 1/2" = 1'-0"

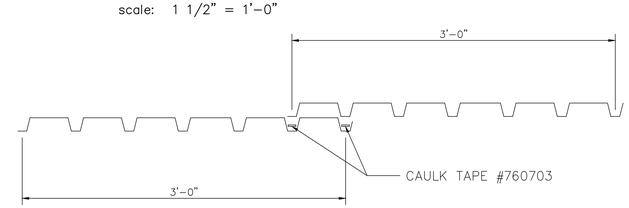

TYPICAL ROOF PANEL OVERLAP

scale: 1 1/2" = 1'-0"

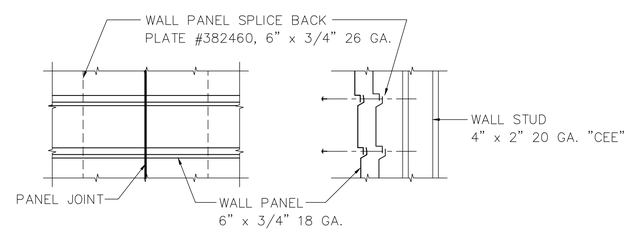

WALL PANEL SPLICE PLATE

scale: 1 1/2" = 1'-0"

REVISIONS	by

COMMONWEALTH OF VIRGINIA
STEVEN P. WESTRA
Lic. No. 03397
JAN 18 2019
PROFESSIONAL ENGINEER

THIS DRAWING AND ALL PARTS THEREOF IS THE EXCLUSIVE PROPERTY OF FIRE FACILITIES, INC., 314 WILBURN ROAD, SUN PRAIRIE, WI 53590 OFFICE: (608) 327-4100 FAX (608) 834-1843 AND MAY NOT BE REPRODUCED IN WHOLE OR PART WITHOUT WRITTEN PERMISSION.

FIRE FACILITIES
STEEL FIRE TRAINING TOWERS
FIRE FACILITIES, INC.
314 WILBURN ROAD, SUN PRAIRIE, WI 53590
OFFICE: (608) 327-4100 FAX: (608) 834-1843
TOLL FREE: (800) 929-3726 TOLL FREE FAX: (866) 639-7012
WWW.FIREFACILITIES.COM; INFO@ FIREFACILITIES.COM

Job Description: WESCO MODEL WH-2
CUSTOM
WINCHESTER, VA

Sheet Title: MISC. DETAILS CONT.

Date	JANUARY 4, 2019
Drawn by	KAH
Checked by	SPW
Scale	SHOWN
Order No.	FTE-733/#208929
Sheet No.	20 of 25

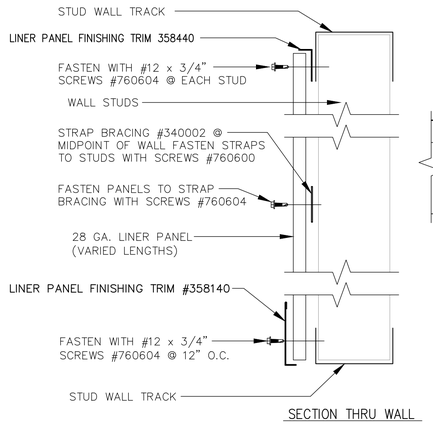

SECTION THRU WALL

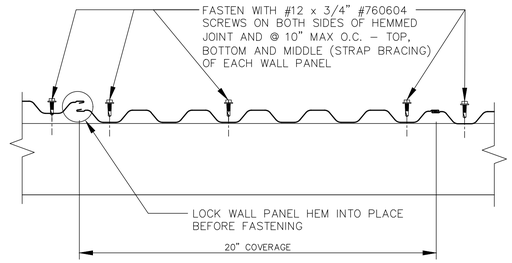

SECTION THRU TYP. LINER PANEL SHEET

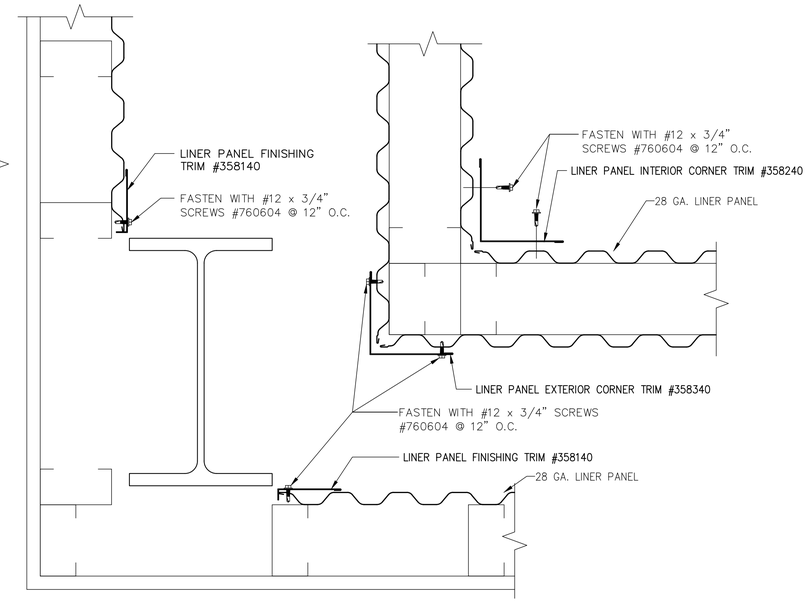

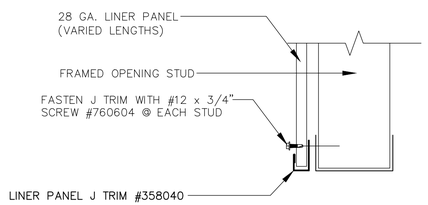

SECTION THRU F.O. HEAD

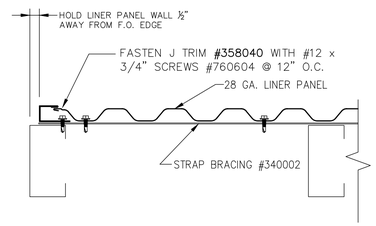

SECTION THRU F.O. JAMB

LINER PANEL FASTENING DETAILS

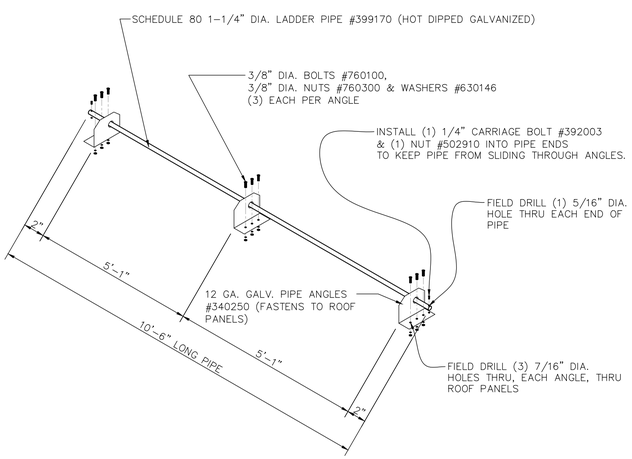

LADDER PIPE ANCHOR DETAIL

IMPORTANT NOTE:

THIS RAPPELLING ANCHOR SYSTEM IS RATED FOR 10,000 LBS WORKING LOAD LIMIT.

DO NOT INSTALL MORE THAN ONE RAPPELLING ANCHOR ON A SINGLE BUILDING JOIST OR MAKE SURE ANCHORS ARE SEPARATED BY AN INTERIOR BEAM (FIELD LOCATE)

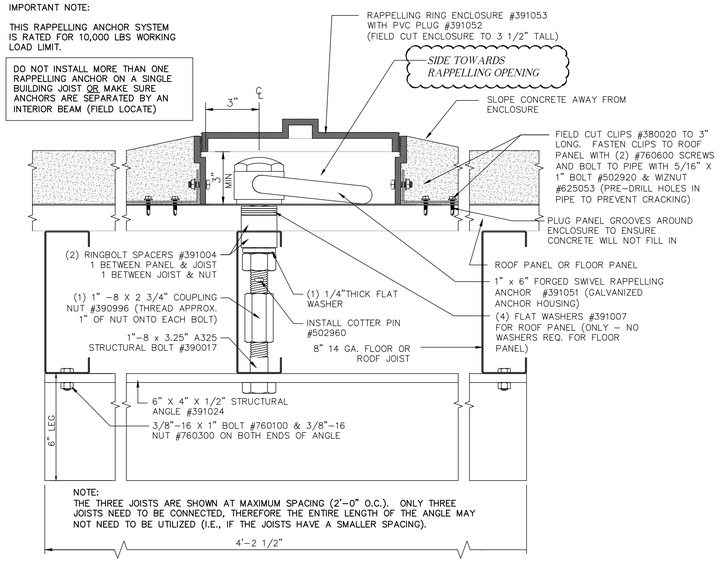

NOTE:
THE THREE JOISTS ARE SHOWN AT MAXIMUM SPACING (2'-0" O.C.). ONLY THREE JOISTS NEED TO BE CONNECTED, THEREFORE THE ENTIRE LENGTH OF THE ANGLE MAY NOT NEED TO BE UTILIZED (I.E., IF THE JOISTS HAVE A SMALLER SPACING).

RECESSED RAPPELLING ANCHOR INSTALLATION DETAIL FOR CONCRETE

scale: 3" = 1'-0"

REVISIONS	by

COMMONWEALTH OF VIRGINIA
STEVEN P. WESTRA
Lic. No. 03397
JAN 18 2019
PROFESSIONAL ENGINEER

THIS DRAWING AND ALL PARTS THEREOF IS THE EXCLUSIVE PROPERTY OF FIRE FACILITIES, INC., 314 WILBURN ROAD, SUN PRAIRIE, WI 53590 OFFICE: (608) 327-4100 FAX (608) 834-1843 AND MAY NOT BE REPRODUCED IN WHOLE OR PART WITHOUT WRITTEN PERMISSION.

FIRE FACILITIES
STEEL FIRE TRAINING TOWERS
FIRE FACILITIES, INC.
314 WILBURN ROAD, SUN PRAIRIE, WI 53590
OFFICE: (608) 327-4100 FAX: (608) 834-1843
TOLL FREE: (800) 929-3726 TOLL FREE FAX: (866) 639-7012
WWW.FIREFACILITIES.COM; INFO@ FIREFACILITIES.COM

Job Description: WESCO MODEL WH-2
CUSTOM
WINCHESTER, VA

Sheet Title: MISC. DETAILS CONT.

Date:	JANUARY 4, 2019
Drawn by:	KAH
Checked by:	SPW
Scale:	SHOWN
Order No.	FTE-733/#208929
Sheet No.	21 of 25

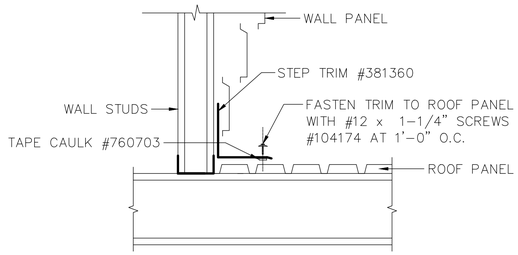

GABLED RESIDENCE ROOF TO FLAT RESIDENCE ROOF STEP TRIM

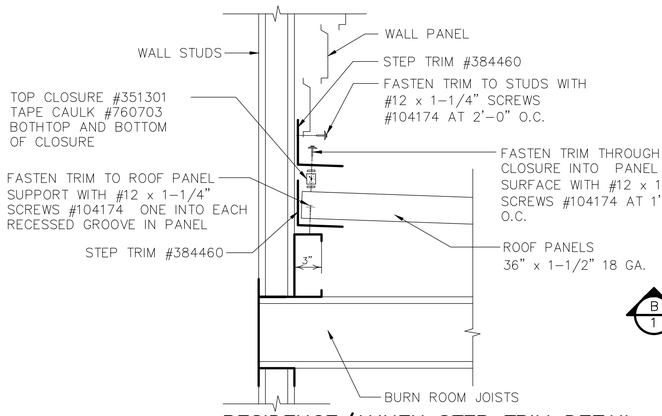

RESIDENCE/ANNEX STEP TRIM DETAIL

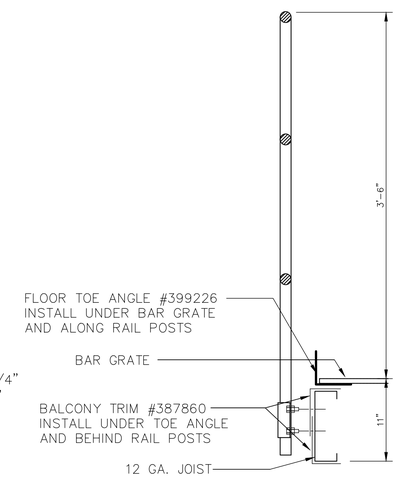

B/1 SECTION THRU CANT. BALCONY HANDRAIL

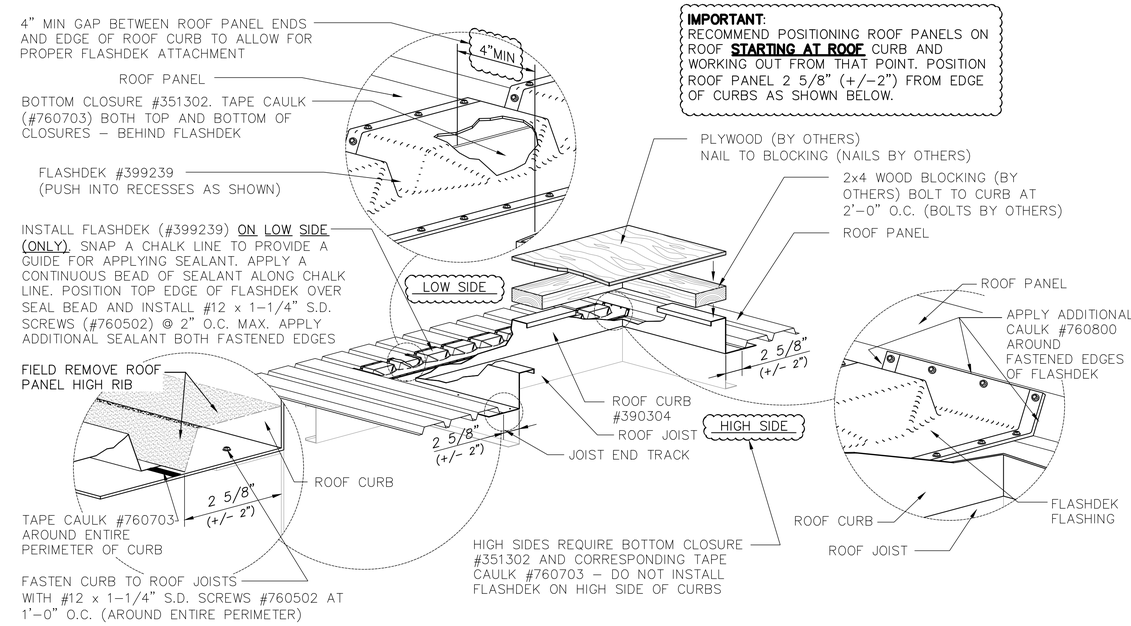

IMPORTANT:
RECOMMEND POSITIONING ROOF PANELS ON ROOF **STARTING AT ROOF** CURB AND WORKING OUT FROM THAT POINT. POSITION ROOF PANEL 2 5/8" (+/-2") FROM EDGE OF CURBS AS SHOWN BELOW.

SLOPED ROOF CHOP-OUT CURB INSTALLATION DETAIL (SLOPED ROOF SYSTEMS ONLY)

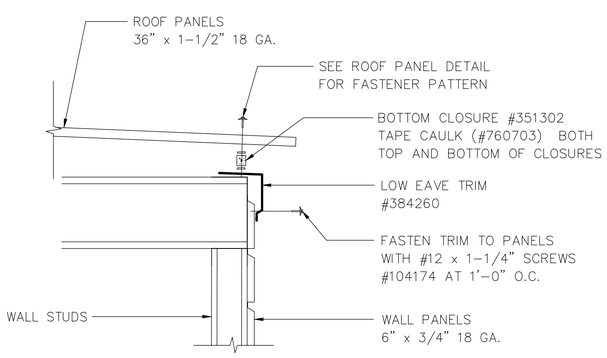

ANNEX EAVE TRIM DETAIL

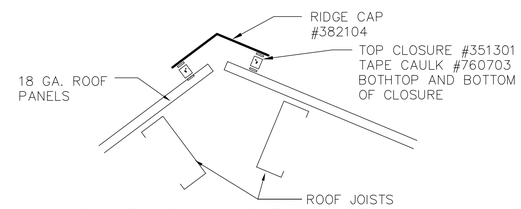

RESIDENCE RIDGE TRIM DETAIL

5/12 PITCH EAVE TRIM DETAIL (RESIDENCE)

NOTE: SOME FIELD NOTCHING OF ROOF PANELS AND TRIM IS REQUIRED AROUND RAILING POSTS

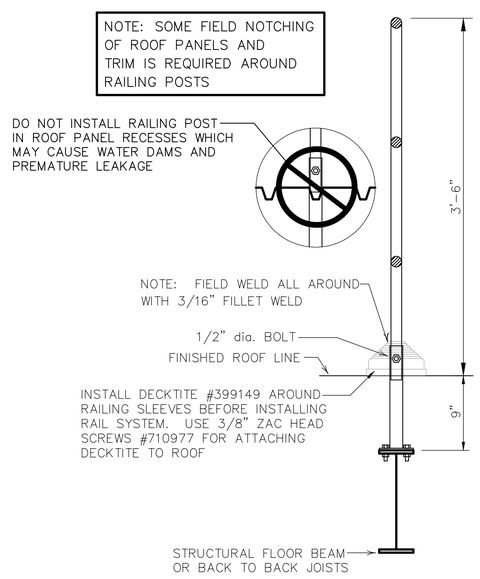

A/1 SECTION THRU ROOF HANDRAIL

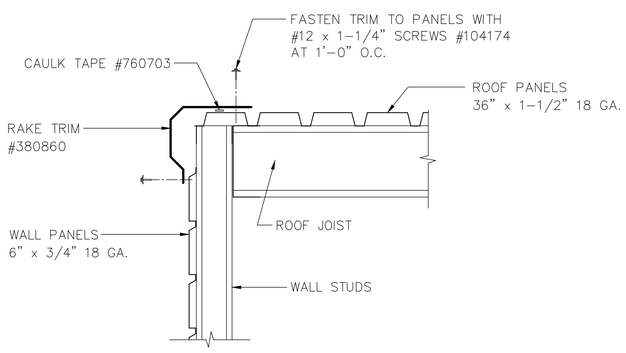

TYPICAL RAKE TRIM DETAIL

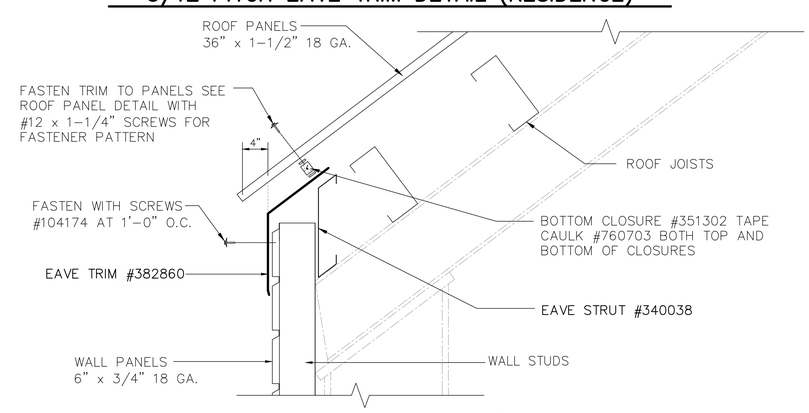

9/12 PITCH EAVE TRIM DETAIL (RESIDENCE)

REVISIONS	by

COMMONWEALTH OF VIRGINIA
STEVEN P. WESTRA
Lic. No. 03397
JAN 18 2019
PROFESSIONAL ENGINEER

THIS DRAWING AND ALL PARTS THEREOF IS THE EXCLUSIVE PROPERTY OF FIRE FACILITIES, INC., 314 WILBURN ROAD, SUN PRAIRIE, WI 53590 OFFICE: (608) 327-4100 FAX (608) 834-1843 AND MAY NOT BE REPRODUCED IN WHOLE OR PART WITHOUT WRITTEN PERMISSION.

FIRE FACILITIES
STEEL FIRE TRAINING TOWERS
FIRE FACILITIES, INC.
314 WILBURN ROAD, SUN PRAIRIE, WI 53590
OFFICE: (608) 327-4100 FAX: (608) 834-1843
TOLL FREE: (800) 929-3726 TOLL FREE FAX: (866) 639-7012
WWW.FIREFACILITIES.COM; INFO@ FIREFACILITIES.COM

Job Description: WESCO MODEL WH-2 CUSTOM WINCHESTER, VA

Sheet Title: MISC. DETAILS CONT.

Date:	JANUARY 4, 2019
Drawn by:	KAH
Checked by:	SPW
Scale:	SHOWN
Order No.	FTE-733/#208929
Sheet No.	22 of 25

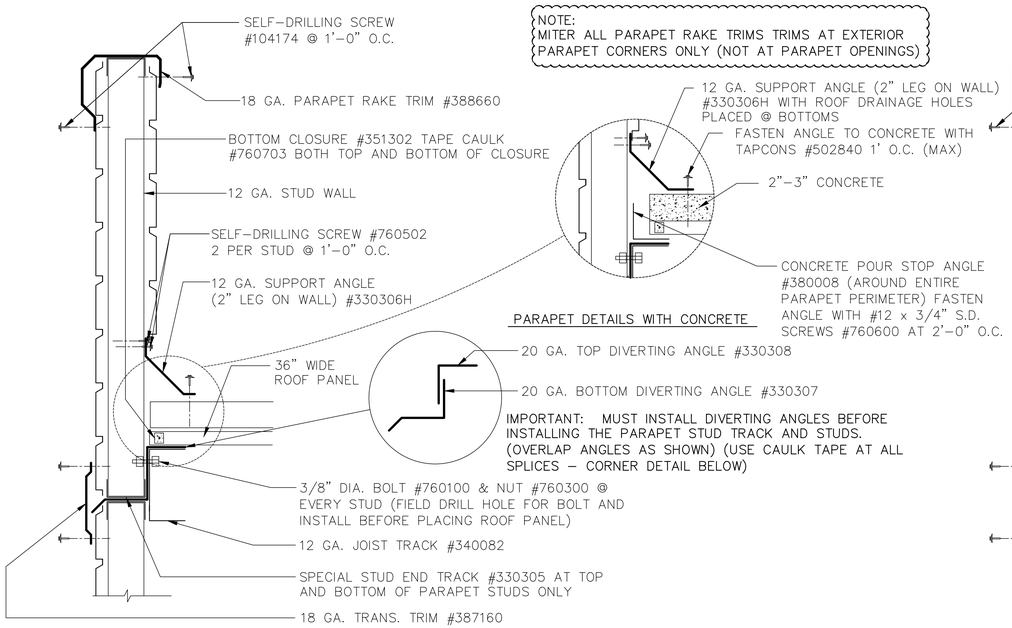

TOWER PARAPET DETAIL AT EAVE

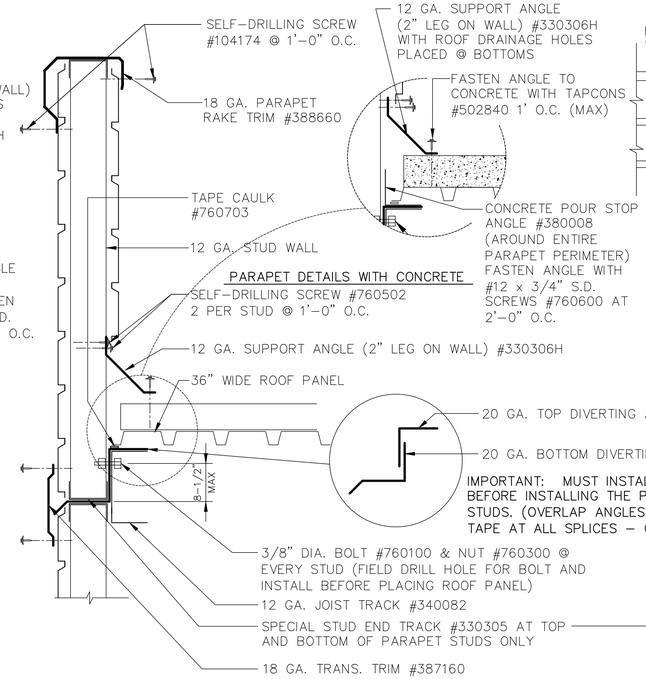

TOWER PARAPET DETAIL AT RAKE

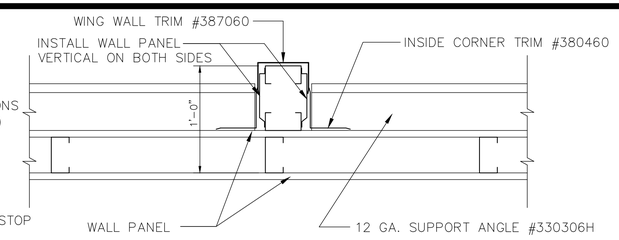

SECTION THRU PARAPET AT WING WALL

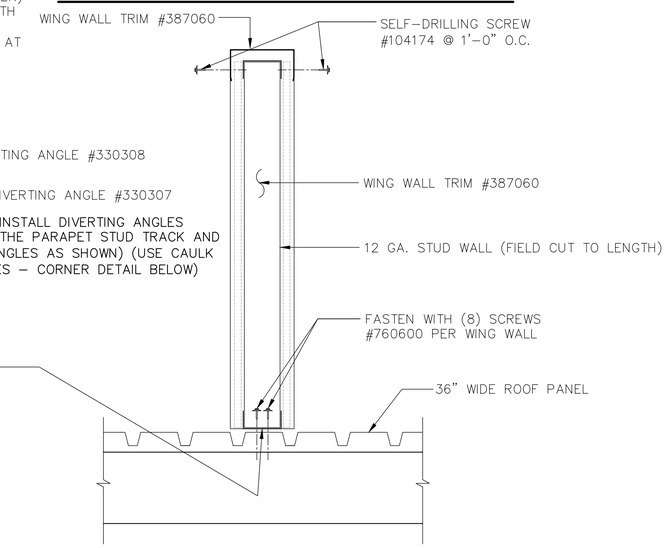

PARAPET WING WALL DETAIL AT END

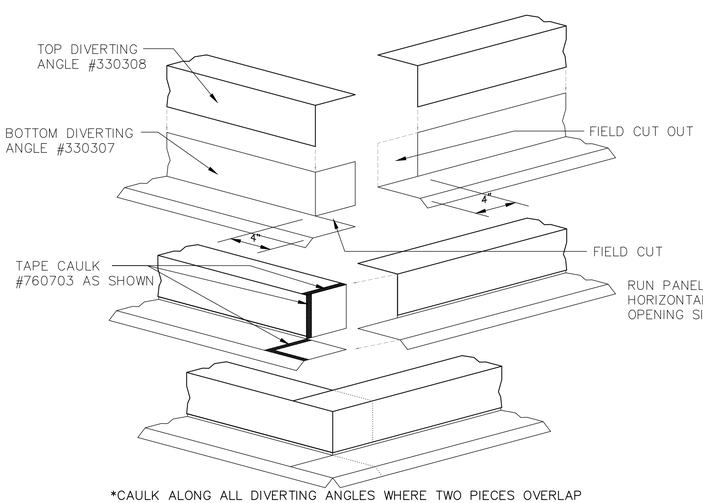

CAULK ALONG ALL DIVERTING ANGLES WHERE TWO PIECES OVERLAP EACH OTHER (APPLIES TO NONCORNER OVERLAPPING AREAS ALSO)

DIVERTING ANGELS/CAULK TAPE DETAIL AT CORNER OF BUILDING

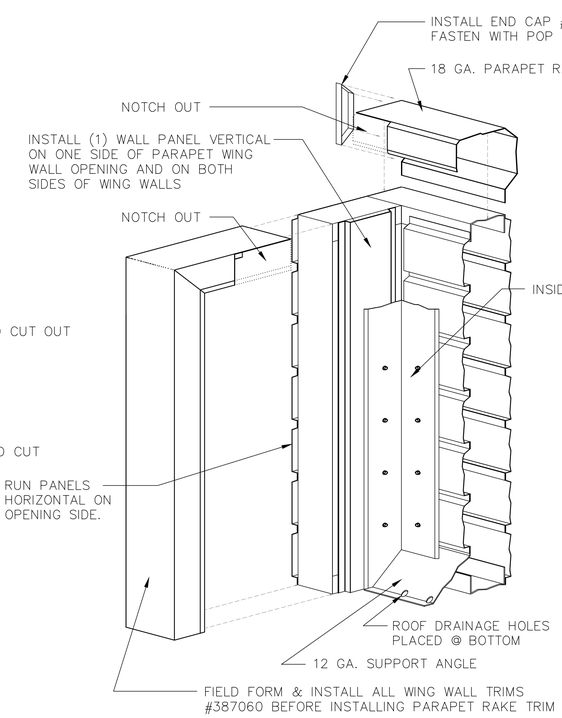

PARAPET OPENING DETAIL

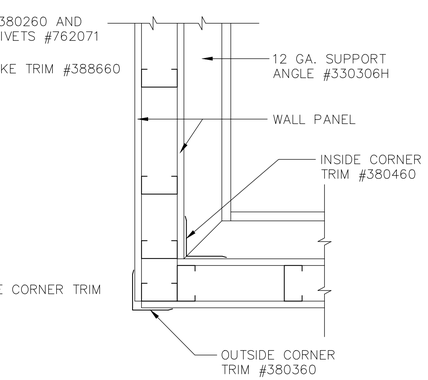

SECTION THRU PARAPET AT BUILDING CORNER

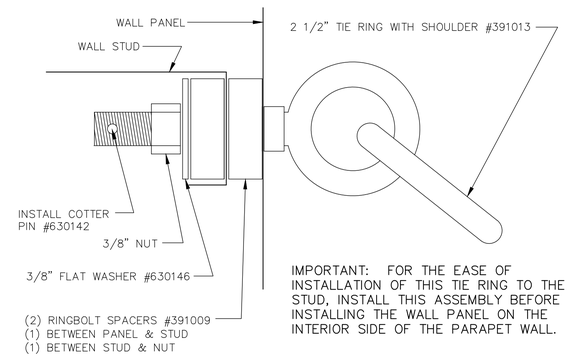

IMPORTANT: FOR THE EASE OF INSTALLATION OF THIS TIE RING TO THE STUD, INSTALL THIS ASSEMBLY BEFORE INSTALLING THE WALL PANEL ON THE INTERIOR SIDE OF THE PARAPET WALL.

PARAPET CHAIN RING INSTALLATION DETAIL

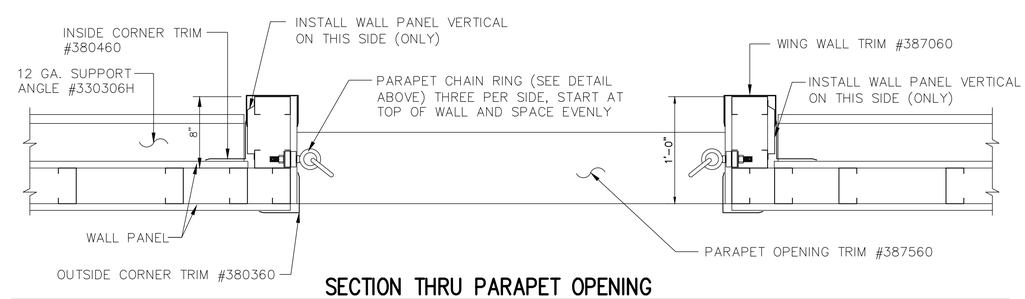

SECTION THRU PARAPET OPENING

REVISIONS	by

THIS DRAWING AND ALL PARTS THEREOF IS THE EXCLUSIVE PROPERTY OF FIRE FACILITIES, INC., 314 WILBURN ROAD, SUN PRAIRIE, WI 53590 OFFICE: (608) 327-4100 FAX (608) 834-1843 AND MAY NOT BE REPRODUCED IN WHOLE OR PART WITHOUT WRITTEN PERMISSION.

FIRE FACILITIES
STEEL FIRE TRAINING TOWERS
FIRE FACILITIES, INC.
314 WILBURN ROAD, SUN PRAIRIE, WI 53590
OFFICE: (608) 327-4100 FAX: (608) 834-1843
TOLL FREE: (800) 929-3726 TOLL FREE FAX: (866) 639-7012
WWW.FIREFACILITIES.COM; INFO@ FIREFACILITIES.COM

Job Description: WESCO MODEL WH-2 CUSTOM WINCHESTER, VA

Sheet Title: PARAPET DETAILS

Date:	JANUARY 4, 2019
Drawn by:	KAH
Checked by:	SPW
Scale:	SHOWN
Order No.	FTE-733/#208929
Sheet No.	23 of 25

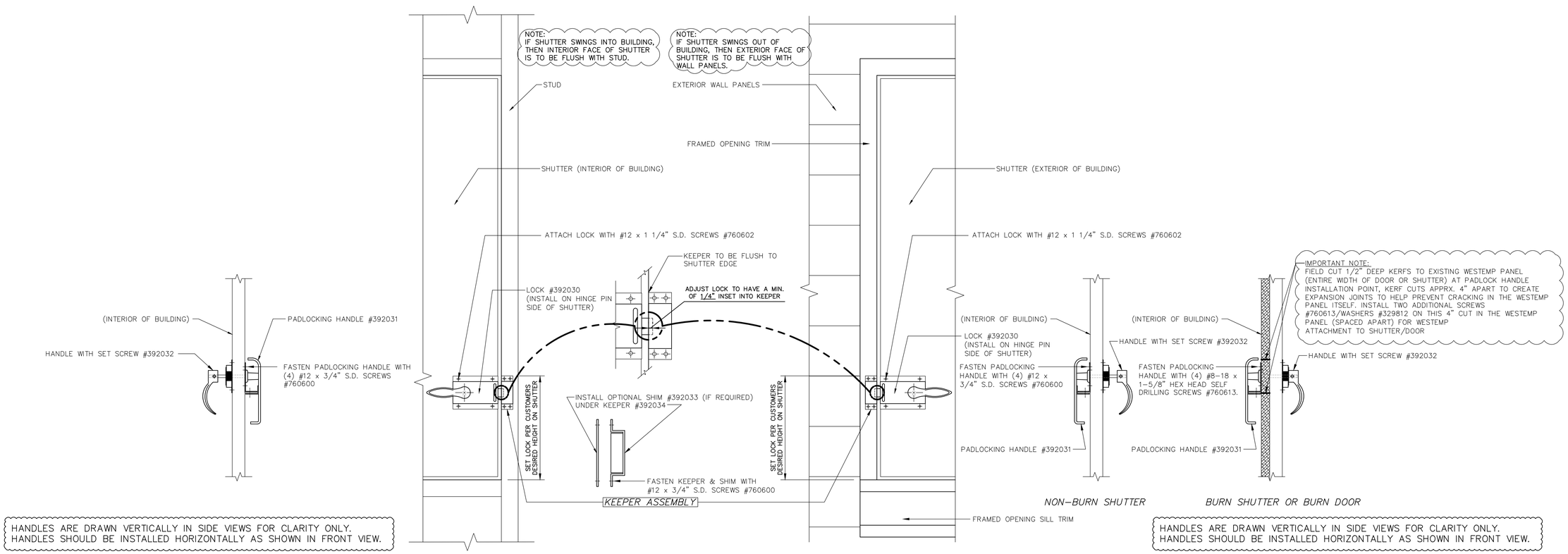

SWING IN SHUTTER HANDLE INSTALLATION

SCALE: 1/8" = 1'-0"

SWING OUT SHUTTER HANDLE INSTALLATION

SCALE: 1/8" = 1'-0"

REVISIONS	by

COMMONWEALTH OF VIRGINIA
STEVEN P. WESTRA
Lic. No. 03397
JAN 18 2019
PROFESSIONAL ENGINEER

THIS DRAWING AND ALL PARTS THEREOF IS THE EXCLUSIVE PROPERTY OF FIRE FACILITIES, INC., 314 WILBURN ROAD, SUN PRAIRIE, WI 53590 OFFICE: (608) 327-4100 FAX (608) 834-1843 AND MAY NOT BE REPRODUCED IN WHOLE OR PART WITHOUT WRITTEN PERMISSION.

FIRE FACILITIES
STEEL FIRE TRAINING TOWERS
FIRE FACILITIES, INC.
314 WILBURN ROAD, SUN PRAIRIE, WI 53590
OFFICE: (608) 327-4100 FAX: (608) 834-1843
TOLL FREE: (800) 929-3726 TOLL FREE FAX: (866) 639-7012
WWW.FIREFACILITIES.COM; INFO@ FIREFACILITIES.COM

Job Description: **WESCO MODEL WH-2**
CUSTOM
WINCHESTER, VA

Sheet Title: SLAM LOCK DETAILS

Date:	JANUARY 4, 2019
Drawn by:	KAH
Checked by:	
Scale:	SHOWN
Order No.	FTE-733/#208929
Sheet No.	24 of 25

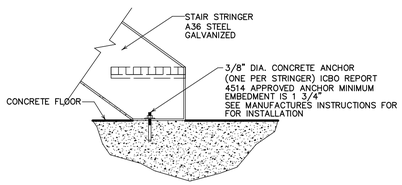

DETAIL 1

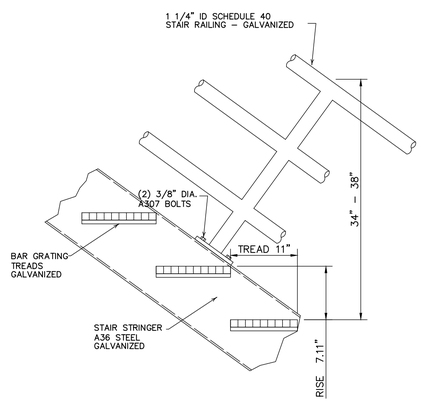

DETAIL 3

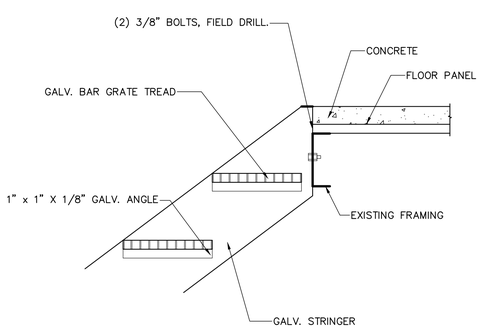

DETAIL 11

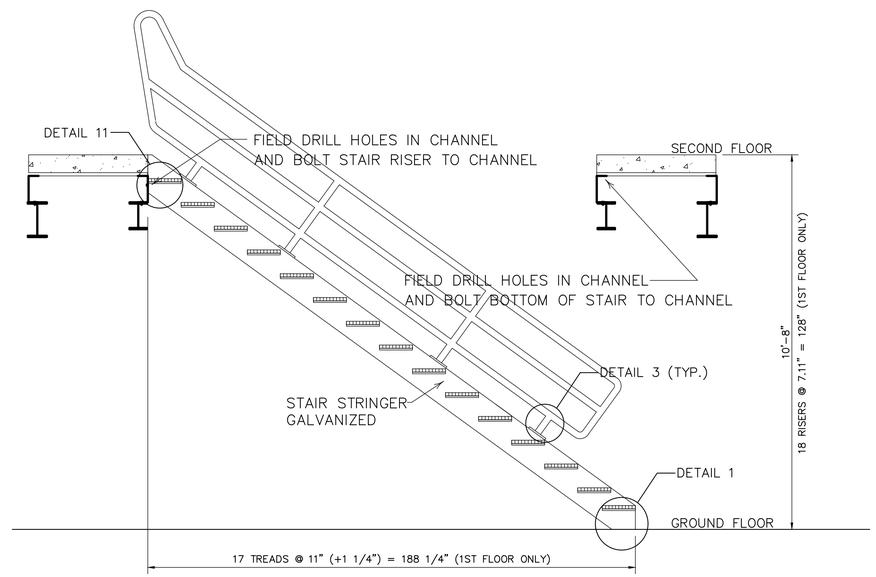

SECTION THRU STAIRS scale: N.T.S.

REVISIONS	by

COMMONWEALTH OF VIRGINIA
STEVEN P. WESTRA
Lic. No. 03397
JAN 18 2019
PROFESSIONAL ENGINEER

THIS DRAWING AND ALL PARTS THEREOF IS THE EXCLUSIVE PROPERTY OF FIRE FACILITIES, INC., 314 WILBURN ROAD, SUN PRAIRIE, WI 53590 OFFICE: (608) 327-4100 FAX (608) 834-1843 AND MAY NOT BE REPRODUCED IN WHOLE OR PART WITHOUT WRITTEN PERMISSION.

FIRE FACILITIES
STEEL FIRE TRAINING TOWERS
FIRE FACILITIES, INC.
314 WILBURN ROAD, SUN PRAIRIE, WI 53590
OFFICE: (608) 327-4100 FAX: (608) 834-1843
TOLL FREE: (800) 929-3726 TOLL FREE FAX: (866) 639-7012
WWW.FIREFACILITIES.COM; INFO@ FIREFACILITIES.COM

Job Description:
WESCO MODEL WH-2
CUSTOM
WINCHESTER, VA

Sheet Title: STAIRS

Date:	JANUARY 4, 2019
Drawn by:	KAH
Checked by:	SPW
Scale:	SHOWN
Order No.	FTE-733/#208929
Sheet No.	25 of 25