ITB # 201922

PARKS AND CITY YARDS UTILITIES

301 EAST CORK STREET,
1001 EAST CORK STREET
CITY OF WINCHESTER, VIRGINIA 22601

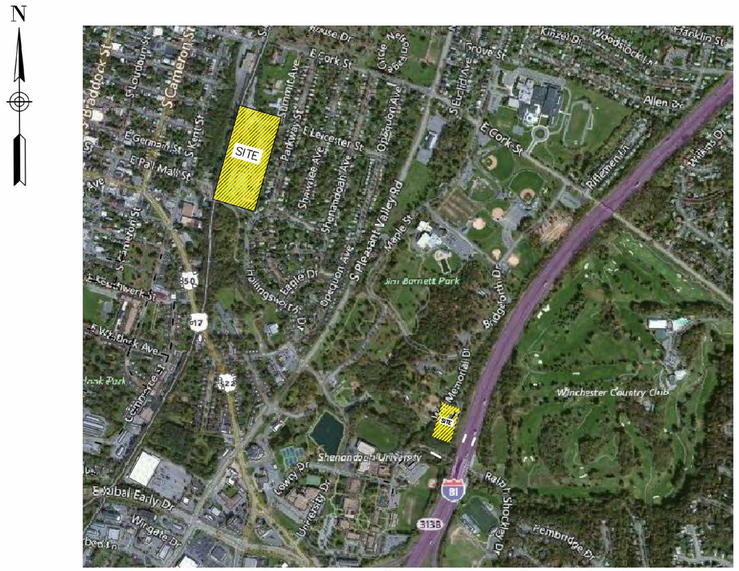

LIST OF SHEET	
SHEET NO.	SHEET TITLE
A1	COVER SHEET
A2	DETAILS SHEET 1
A3	DETAILS SHEET 2
A4	PARKS WATER MAIN PLAN
B1	STORM SEWER SYSTEM PALL MALL STREET AREA
B2	STORM SEWER SYSTEM CORK STREET AREA
B3	STORM SEWER SYSTEM DRAINAGE DIVIDIES PLAN
B4	SANITARY SEWER SYSTEM AND WATER SYSTEM PLAN
B5	STORM SEWER PROFILE A–A1–A2–A3–A4, A1–B1–B2 AND B1–B1a
B6	STORM SEWER PROFILE C–C1–C2, C–D1–D2, M–M1, AND N–N1–N2
B7	WATER LINE PROFILE A (10+00–22+53.47)
B8	WATER LINE PROFILE B (10+00–19+00)
B9	SANITARY SEWER PROFILE MX–M1–M2–M3–M4

CITY OF WINCHESTER
PUBLIC SERVICES DEPARTMENT
15 N. CAMERON STREET
WINCHESTER, VIRGINIA 22601
PHONE: (540) 667–1815

SHEET: A1

CITY OF WINCHESTER, VA
DEPARTMENT OF PUBLIC UTILITIES

* 2" FORD COMPRESSTER MODEL # VBH-072-1SBHS-11-77
* 1-1/2" FORD: SAME LAYING DISTANCE AS 2" WITH FORD # AVC COUPLERS AND FORD # AVC UNIONS
* SET METER WIDTH TO 17". USE ADAPTERS FOR 1-1/2" METERS AS NECESSARY.
* METER SUPPLIED BY THE DEPARTMENT OF PUBLIC UTILITIES
* FLANGED ANGLE METER VALVE SHALL HAVE O-RING TYPE FLANGE METER SUPPORT BRACKETS
* BACK FLOW DEVICE REQUIRED AS SET FORTH IN CITY CROSS CONNECTION CONTROL PROGRAM
* BACKFLOW DEVICE MAY NOT BE INSTALLED IN METER VAULT
* PRECAST VAULT AS MANUFACTURED BY WINCHESTER BUILDING SUPPLY OF WINCHESTER, VA OR APPROVED EQUAL
* CONNECT TO EX. SERVICE BEHIND SIDEWALK OR AT BUILDING

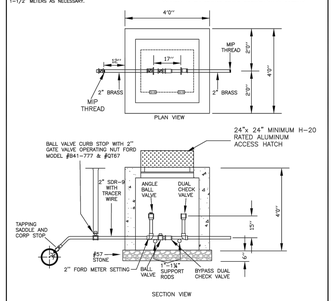

STANDARD DETAIL NO. WD-- 4	1 1/2" & 2" METER INSTALLATION SCALE: NONE	DATE: 02/2018

CITY OF WINCHESTER, VA
DEPARTMENT OF PUBLIC UTILITIES

FIRE HYDRANT SHALL BE TRAFFIC MODEL
RESTRAINTS SHALL BE BY MEGA-LUG FLANGES
4 - 1/2" STREAMER NOZZLE SHALL FACE THE ROADWAY

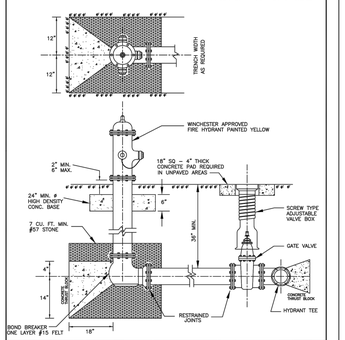

STANDARD DETAIL NO. WD-- 7	FIRE HYDRANT INSTALLATION SCALE: NONE	DATE: 10/2017

CITY OF WINCHESTER, VA
DEPARTMENT OF PUBLIC UTILITIES

TYPICAL RESILIENT SEAT VALVE INSTALLATION:

VALVE BOX AND BOOT SHALL BE CAST IRON
VALVE BOX COVER SHALL BE MARKED "WATER"
VALVE TOP SHALL BE FLUSH WITH FINISHED GRADE
18" X 18" CONCRETE PAD SHALL BE PLACED AROUND VALVE BOXES LOCATED OUTSIDE OF PAVEMENT AREAS
VALVE BOX SHALL BE SCREW TYPE FOR ADJUSTMENT

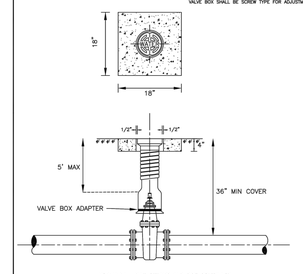

MECHANICAL JOINT FITTINGS AND PIPE RESTRAINED BY USING MEGA-LUG RESTRAINING FLANGES

STANDARD DETAIL NO. WD-- 8	TYPICAL VALVE & BOX INSTALLATION SCALE: NONE	DATE: 10/2017

CITY OF WINCHESTER, VA
DEPARTMENT OF PUBLIC UTILITIES

THE FOLLOWING JOINTS MUST BE RESTRAINED IN ALL APPLICATIONS:
1. BEND - INLET & OUTLET
2. TEE - INLET & BRANCH OUTLET
3. TEE - BRANCH OUTLET
4. REDUCERS - LARGER PIPE ONLY
5. ALL PLUGS
6. HYDRANT BONNETS SHALL BE RESTRAINED AS DEAD ENDS

THRUST RESTRAINT ON SLIP JOINT DUCTILE IRON PIPE SHALL BE MEGALUG SERIES 1700, UNI-FLANGE SERIES 1450, OR APPROVED EQUAL.

THRUST RESTRAINT ON PUSH ON DUCTILE IRON FITTINGS SHALL BE MEGALUG SERIES 1100 OR UNI-FLANGE JOINT FITTINGS WITH MEGALUG SERIES 1100 OR UNI-FLANGE SERIES 1400 (OR APPROVED EQUAL).

WATER LINE SHALL ALSO BE SECURED W/THRUST BLOCKING PER CITY OF WINCHESTER STD. DETAILS WD-10 AND WD-11.

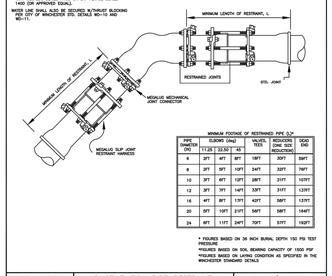

MINIMUM FOOTAGE OF RESTRAINED PIPE (L)*

PIPE DIAMETER (IN)	ELBOWS (deg)			VALVES, TEES	REDUCERS (ONE SIZE REDUCTION)	DEAD END
	11.25	22.50	45			
6	2FT	4FT	8FT	19FT	39FT	58FT
8	2FT	5FT	10FT	24FT	32FT	79FT
10	3FT	6FT	12FT	29FT	31FT	101FT
12	3FT	7FT	14FT	33FT	31FT	122FT
16	4FT	8FT	17FT	42FT	58FT	123FT
20	5FT	10FT	21FT	50FT	58FT	164FT
24	6FT	11FT	24FT	70FT	57FT	192FT

* FIGURES BASED ON 36 INCH BURIAL DEPTH 150 PSI TEST PRESSURE
*FIGURES BASED ON SOIL BEARING CAPACITY OF 1500 PSF
*FIGURES BASED ON LAYING CONDITION AS SPECIFIED IN THE WINCHESTER STANDARD DETAILS

STANDARD DETAIL NO. WD-- 9	DUCTILE IRON PIPE RESTRAINT SCALE: NONE	DATE: 10/2017

CITY OF WINCHESTER, VA
DEPARTMENT OF PUBLIC UTILITIES

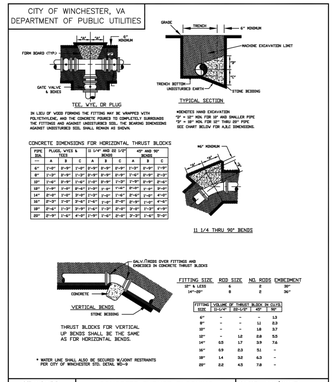

STANDARD DETAIL NO. WD-10	CONCRETE THRUST BLOCKING SCALE: NONE	DATE: 10/2017

CITY OF WINCHESTER, VA
DEPARTMENT OF PUBLIC UTILITIES

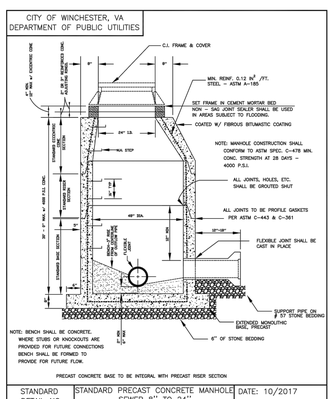

STANDARD DETAIL NO. SS-1	STANDARD PRECAST CONCRETE MANHOLE SEWER 8" TO 24" SCALE: NONE	DATE: 10/2017

CITY OF WINCHESTER, VA
DEPARTMENT OF PUBLIC UTILITIES

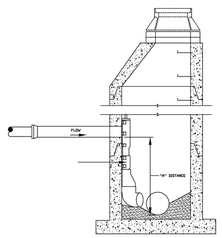

NOTES: WHERE "A" DISTANCE IS LESS THAN 3'-1" THE INCOMING SEWER SHALL BE LOWERED SO THAT THE TOP OF THE INCOMING SEWER IS NOT MORE THAN 2 FT. ABOVE THE TOP OF THE OUTGOING SEWER

STANDARD DETAIL NO. SS-2	INSIDE DROP CONNECTION FOR SANITARY MAINS 8" - 12" SCALE: NONE	DATE: 10/2017

CITY OF WINCHESTER, VA
DEPARTMENT OF PUBLIC UTILITIES

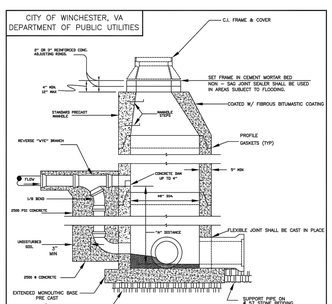

NOTES: WHERE "A" DISTANCE IS LESS THAN 6'-0" THE INCOMING SEWER SHALL BE LOWERED SO THAT THE TOP OF THE INCOMING SEWER IS NOT MORE THAN 2 FT. ABOVE THE TOP OF THE OUTGOING SEWER

WHERE "A" DISTANCE IS GREATER THAN 6'-0" USE STANDARD DROP CONNECTION.

CONCRETE ENCASEMENT MAY BE ELIMINATED IF D.I. PIPE AND FITTINGS ARE USED FOR DROP CONNECTION

STANDARD DETAIL NO. SS-3	OUTSIDE DROP CONNECTION FOR SANITARY MAINS 15" AND LARGER SCALE: NONE	DATE: 10/2017

CITY OF WINCHESTER, VA
DEPARTMENT OF PUBLIC UTILITIES

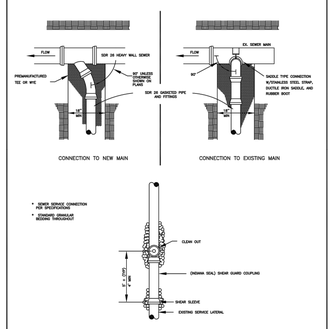

* SEWER SERVICE CONNECTION PER SPECIFICATIONS
* STANDARD DIMENSIONAL BEDDING THROUGHOUT

STANDARD DETAIL NO. SS-- 4	STANDARD SANITARY LATERAL CONNECTION SCALE: NONE	DATE: 10/2017

CITY OF WINCHESTER, VA
DEPARTMENT OF PUBLIC UTILITIES

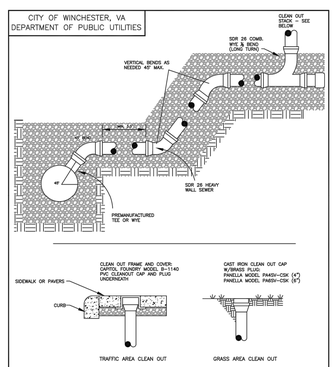

STANDARD DETAIL NO. SS-5	STANDARD SANITARY LATERAL CONNECTION SCALE: NONE	DATE: 10/2017

NO.	DATE	DESCRIPTION	BY

REVISION

PARKS AND CITY YARDS UTILITIES

DETAILS SHEET

CITY OF WINCHESTER VIRGINIA
ENGINEERING DIVISION
15 N. CAMERON STREET
WINCHESTER, VA 22601
PH: (540) 667-1815

Winchester public services Virginia

PROJECT NO.: 201923

SCALE: N/A

DATE: 07/31/2019

SHEET: A2

CITY OF WINCHESTER, VA
DEPARTMENT OF PUBLIC UTILITIES

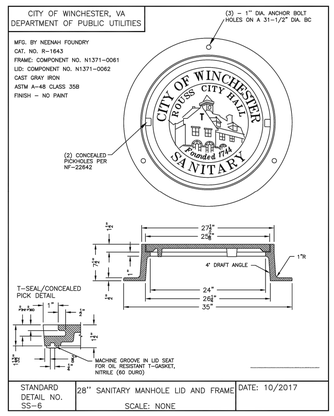

STANDARD DETAIL NO. SS-6	28" SANITARY MANHOLE LID AND FRAME SCALE: NONE	DATE: 10/2017

CITY OF WINCHESTER, VA
DEPARTMENT OF PUBLIC UTILITIES

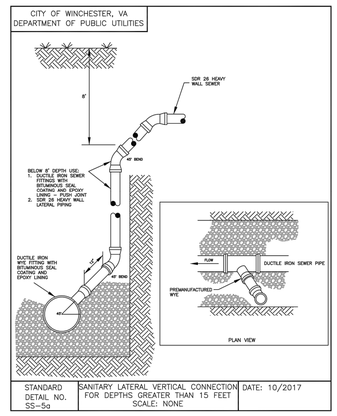

STANDARD DETAIL NO. SS-5a	SANITARY LATERAL VERTICAL CONNECTION FOR DEPTHS GREATER THAN 15 FEET SCALE: NONE	DATE: 10/2017

CITY OF WINCHESTER, VA
DEPARTMENT OF PUBLIC UTILITIES

- WHERE THE TRENCH BOTTOM IS ROCK, IT SHALL BE EXCAVATED TO A MINIMUM OF 8" BELOW THE PIPE AND THE PIPE SHALL BE BACKFILLED WITH BEDDING MATERIAL FREE OF ROOTS, DEBRIS & STONES
- WHERE SUBGRADE IS UNSTABLE, PIPE SHALL BE BEDDED ON A MINIMUM OF 8" BEDDING MATERIAL.

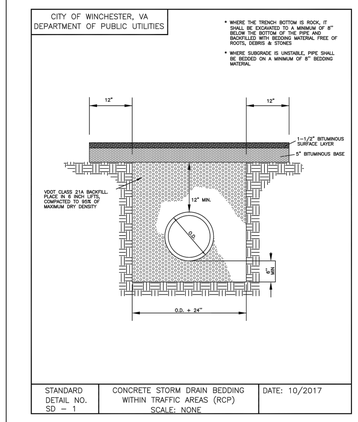

STANDARD DETAIL NO. SD – 1	CONCRETE STORM DRAIN BEDDING WITHIN TRAFFIC AREAS (RCP) SCALE: NONE	DATE: 10/2017

CITY OF WINCHESTER, VA
DEPARTMENT OF PUBLIC UTILITIES

- WHERE THE TRENCH BOTTOM IS ROCK, IT SHALL BE EXCAVATED TO A MINIMUM OF 8" BELOW THE PIPE AND THE PIPE SHALL BE BACKFILLED WITH BEDDING MATERIAL FREE OF ROOTS, DEBRIS & STONES
- WHERE SUBGRADE IS UNSTABLE, PIPE SHALL BE BEDDED ON A MINIMUM OF 8" BEDDING MATERIAL.

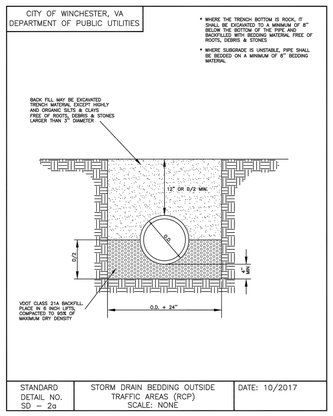

STANDARD DETAIL NO. SD – 2a	STORM DRAIN BEDDING OUTSIDE TRAFFIC AREAS (RCP) SCALE: NONE	DATE: 10/2017

CITY OF WINCHESTER, VA
DEPARTMENT OF PUBLIC UTILITIES

- WHERE THE TRENCH BOTTOM IS ROCK, IT SHALL BE EXCAVATED TO A MINIMUM OF 8" BELOW THE PIPE AND THE PIPE SHALL BE BACKFILLED WITH BEDDING MATERIAL FREE OF ROOTS, DEBRIS & STONES
- WHERE SUBGRADE IS UNSTABLE, PIPE SHALL BE BEDDED ON A MINIMUM OF 8" BEDDING MATERIAL.
- HDPE PIPE MUST BE INSTALLED PER MANUFACTURERS SPECS

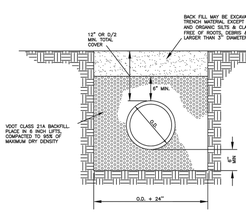

STANDARD DETAIL NO. SD – 2b	STORM DRAIN BEDDING OUTSIDE TRAFFIC AREAS (CORRUGATED HDPE) SCALE: NONE	DATE: 10/2017

CITY OF WINCHESTER, VA
DEPARTMENT OF PUBLIC UTILITIES

MFG. BY NEENAH FOUNDRY
CAT. NO. R-1643
FRAME: COMPONENT NO. N1371-0061
LID: COMPONENT NO. N1371-0063
CAST GRAY IRON
ASTM A-48 CLASS 35B
FINISH – NO PAINT

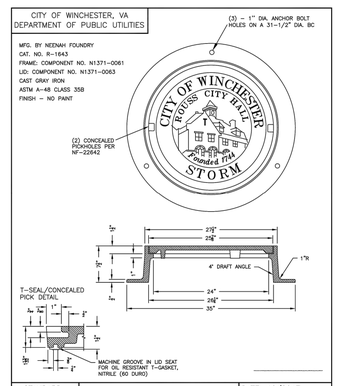

STANDARD DETAIL NO. SD–3	28" STORM MANHOLE LID AND FRAME SCALE: NONE	DATE: 10/2017

CITY OF WINCHESTER, VA
DEPARTMENT OF PUBLIC UTILITIES

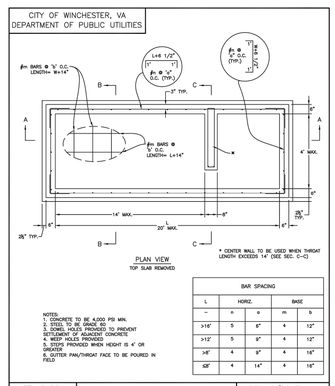

NOTES:
1. CONCRETE TO BE 4,000 PSI MIN.
2. STEEL TO BE GRADE 60
3. DOWEL HOLES PROVIDED TO PREVENT SLIPPAGE OF PRECAST CONCRETE
4. WEEP HOLES PROVIDED
5. STEPS PROVIDED WHEN HEIGHT IS 4' OR GREATER
6. OUTER PAVI/THROAT FACE TO BE POURED IN FIELD

BAR SPACING			
L	HORIZ.		BASE
–	n	s	m t
>16'	5	6"	4 12"
>12'	5	9"	4 12"
>8'	4	9"	4 18"
<8'	4	14"	4 18"

STANDARD DETAIL NO. SD – 4a	DI–3A, 3B, 3C (SHALLOW) SCALE: NONE	DATE: 10/2017 SHEET 1 OF 3

CITY OF WINCHESTER, VA
DEPARTMENT OF PUBLIC UTILITIES

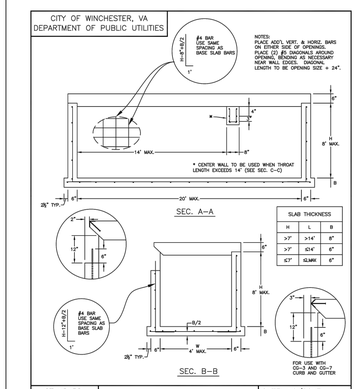

SLAB THICKNESS

H	L	B
>7'	>14'	8"
>7'	<14'	6"
<7'	SLAB	6"

STANDARD DETAIL NO. SD – 4b	DI–3A, 3B, 3C (SHALLOW) SCALE: NONE	DATE: 10/2017 SHEET 2 OF 3

CITY OF WINCHESTER, VA
DEPARTMENT OF PUBLIC UTILITIES

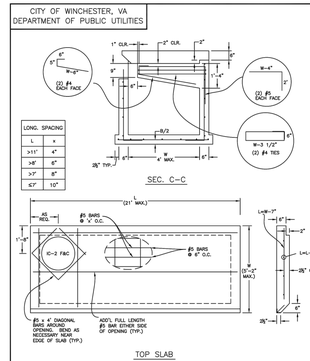

LONG. SPACING

L	s
>11'	4"
>8'	6"
>7'	8"
<7'	10"

STANDARD DETAIL NO. SD – 4c	DI–3A, 3B, 3C (SHALLOW) SCALE: NONE	DATE: 10/2017 SHEET 3 OF 3

CITY OF WINCHESTER, VA
DEPARTMENT OF PUBLIC UTILITIES

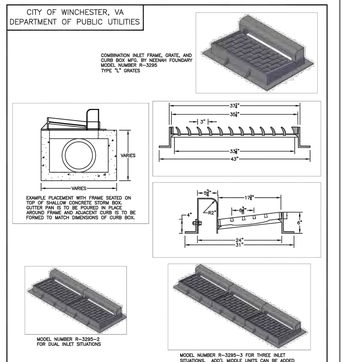

STANDARD DETAIL NO. SD – 5	MODIFIED DI–1 (SHALLOW) SCALE: NONE	DATE: 10/2017

CITY OF WINCHESTER, VA
DEPARTMENT OF PUBLIC UTILITIES

MFG. BY NEENAH FOUNDRY
CAT. NO. R-1643
FRAME: COMPONENT NO. NXXXX–XXXX
LID: COMPONENT NO. NXXXX–XXXX
CAST GRAY IRON
ASTM A-48 CLASS 35B
FINISH – NO PAINT

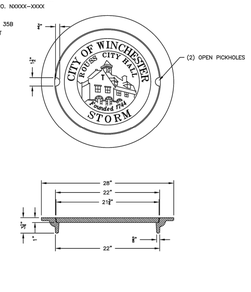

STANDARD DETAIL NO. SD–6	22" DI–3 LID AND FRAME SCALE: NONE	DATE: 10/2017

REVISION			
NO.	DATE	DESCRIPTION	BY

PARKS AND CITY YARDS UTILITIES

DETAILS SHEET 2

CITY OF WINCHESTER VIRGINIA
ENGINEERING DIVISION
15 N. CAMERON STREET
WINCHESTER, VA 22601
PH: (540) 667–1815

Winchester Virginia public services

PROJECT NO.: 201923

SCALE: N/A

DATE: 07/31/2019

SHEET: A3

1. THE LOCATION OF ALL EXISTING UTILITIES AS SHOWN IS ONLY APPROXIMATE. THE CONTRACTOR IS RESPONSIBLE FOR LOCATING ALL PUBLIC OR PRIVATE UTILITIES THAT LIE IN OR ADJACENT TO CONSTRUCTION SITE.
2. LOCATIONS OF NEW FIRE HYDRANTS TO BE DETERMINED IN FILED

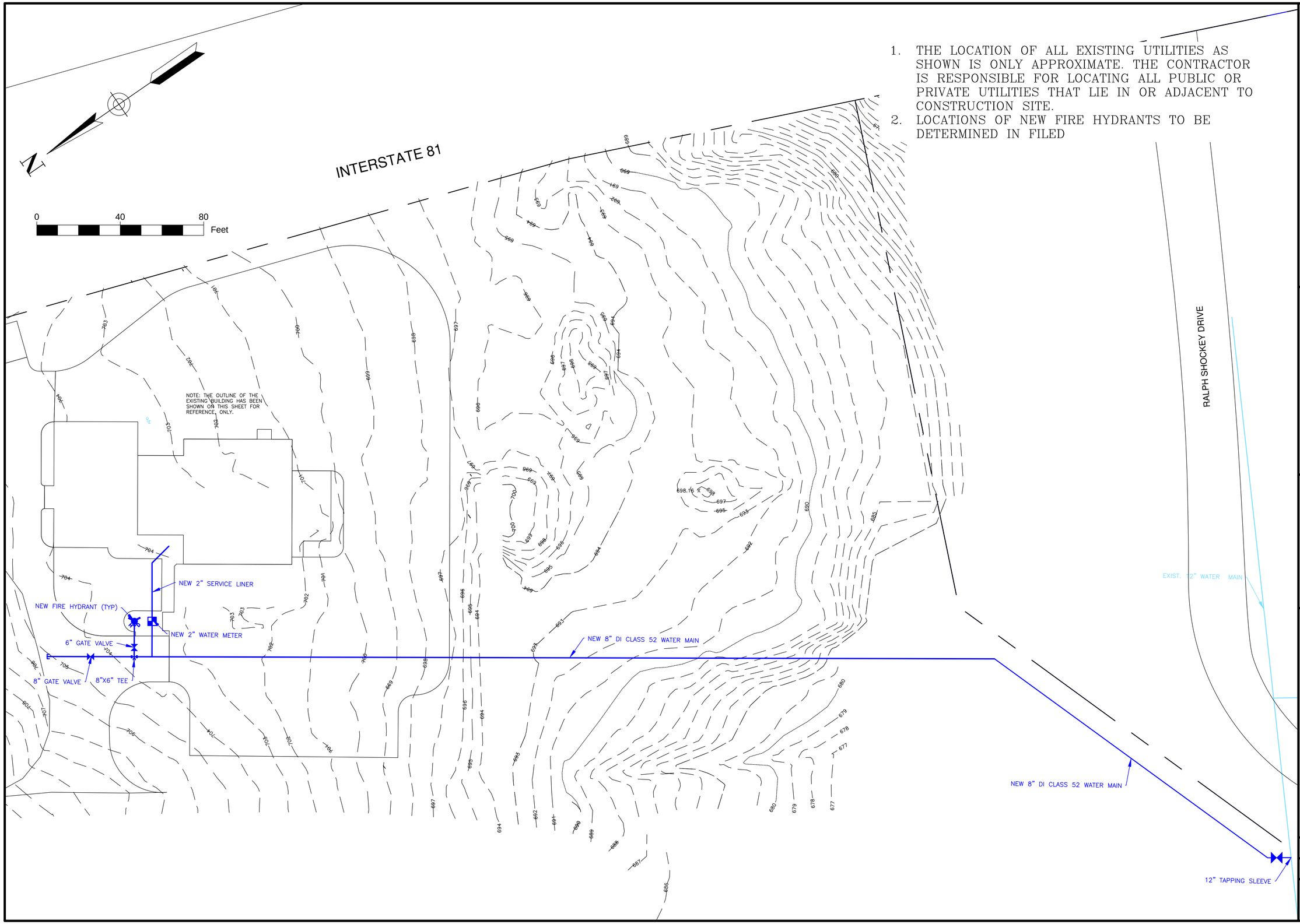

REVISION			
NO.	DATE	DESCRIPTION	BY

PARKS AND CITY YARDS UTILITIES

PARKS WATER MAIN PLAN

CITY OF WINCHESTER VIRGINIA
ENGINEERING DIVISION
15 N. CAMERON STREET
WINCHESTER, VA 22601
PH: (540) 667-1815

Winchester Virginia public services

PROJECT NO.: 201923

SCALE: 1"=20'

DATE: 07/31/2019

SHEET: A4

PR. DI-1 (CUT INTO EX. STORM)
TOP = 674.50
Ex. 36"x24" RCEP INV. IN = 672.32 (V.I.F.)
Ex. 36"x24" RCEP INV. OUT= 672.30 (V.I.F.)

Ex. 36"x24" RCEP
Inv= 672.17

N11°37'49"E 121.11'

N14°07'44"E 287.24'

N17°27'48"E 162.41'

Ex. 172.09'-30"ø RCP @ 2.75%

Ex. MH (w/BMP Device)
Top= 687.48'
30" RCP Inv. In= 677.33'
30" RCP Inv. Out=677.23'
(TO BE REMOVED AND PATCH PIPING, AS NEEDED)

Ex. D.I.
Top= 687.32'
30" RCP Inv. In= 677.04'
30" RCP Inv. Out=676.90'

Ex. 216.62'-30"ø RCP @ 0.83%

EX. DI-3C, L=6'
TOP = 690.40
PR. 18" INV. IN = 685.40
EX. 30" INV. IN = 678.86
EX. 30" INV. OUT= 678.83
(ADJUST TOP, AS NEEDED)

Ex. Grate
Top= 689.32
Inv.= Not Determined

Ex. Grate
Top= 689.33

Ex. D.I.
Top= 690.58'
30" CPP Inv. In= 678.86'
30" RCP Inv. Out=678.83'

Ex. 178.21'-30"ø RCP @ 0.22%

PR. MH-1
(Remove Ex. DI Top)
TOP = 693.60
15" INV. IN = 683.75
24" INV. IN = 683.00
Ex. INV. OUT= 679.25

PR. 60.12'-18"ø
RCP, Cl. III @
3.50% Slope

PR. DI-3B, L=12'
TOP = 692.00
INV. OUT=687.50

PR. DI-7
TOP = 692.80
24" INV. IN = 684.50
24" INV. OUT= 684.30

PR. 52.00'-24"ø RCP, Cl. III @ 2.50% Slope

PR. 130.20'-15"ø RCP, Cl. III @ 4.63% Slope

PR. 88.00'-24"ø RCP, Cl. III @ 1.14% Slope

Ex. D.I.
Top = 690.58'
30" CPP Inv. In = 679.35'
30" CPP Inv. Out= 679.25'

Ex. Storm
(To Be Abandoned)

PR. 12.60'-15"ø RCP, Cl. III @ 1.21% Slope

PR. DI-3B, L=6'
TOP = 695.30
15" INV. IN = 690.00
15" INV. OUT= 689.80

PR. DI-3B, L=8'
TOP = 675.00
23"x14" INV. IN = 671.30
30"x19" INV. OUT= 671.30

EX. END WALL
T.O.W. = 673.29
30"x19" INV. OUT= 671.20

EX. END WALL
TOP = 673.10
23"x14" INV. OUT=671.00

PR. 40.00'-30"x19" RCEP @ 1.25% Slope

Ex. 34.00'-23"x14" RCEP @ 0.59% Slope

PR. 98.00'-23"x14" RCEP @ 0.51% Slope

PR. DI-3B, L=12'
TOP = 675.00
23"x14" INV. OUT
= 671.50

NOTE:
RELOCATE THE GAS UTILITY, AS NEEDED, TO INSTALL THE PR. STORM SYSTEM

PR. DI-1
TOP = 674.00
PR. 23"x14" INV.
OUT= 671.50

S66°07'16"W 110.00'

35' B.R.L.

10' B.R.L.

S16°43'16"W 140.48'

S73°16'44"E
6.00'

S16°43'16"W 850.46'

Ex. 2"ø Water Service Line (V.I.F.)

Ex. WV Vault

Ex. Storm

Ex. Wetlands

Flowline
El.= 683.17'

Ex. Flowline
El.= 683.50'

PR. OHE

PR. UGG

30 0 30 90
Scale 1" = 30 ft

NO.	DATE	DESCRIPTION	BY
		REVISIONS	

TITLE:
CITY MAINTENANCE YARD
PROJECT B
UTILITY CONSTRUCTION PROJECT:
STORM SEWER SYSTEM
PALL MALL STREET AREA

CITY OF WINCHESTER, VIRGINIA
CITY MAINTENANCE YARD
SITE IMPROVEMENTS
301 EAST CORK STREET
CITY OF WINCHESTER, VIRGINIA

PAINTER-LEWIS, P.L.C.
817 CEDAR CREEK GRADE, SUITE 120
WINCHESTER, VIRGINIA 22601
Telephone: (540) 662-5792
Facsimile: (540) 662-5793
Email: office@painterlews.com
CONSULTING ENGINEERS

COMMONWEALTH OF VIRGINIA
TIMOTHY G. PAINTER
Lic. No. 018260
07/19/19
PROFESSIONAL ENGINEER

SURVEY: P-L, PLC.	C.I.: 2'
DRAWN BY: TGP	JOB NO.: 1801014
SCALE: 1"=30'	DATE: 08/20/18
SHEET:	B1

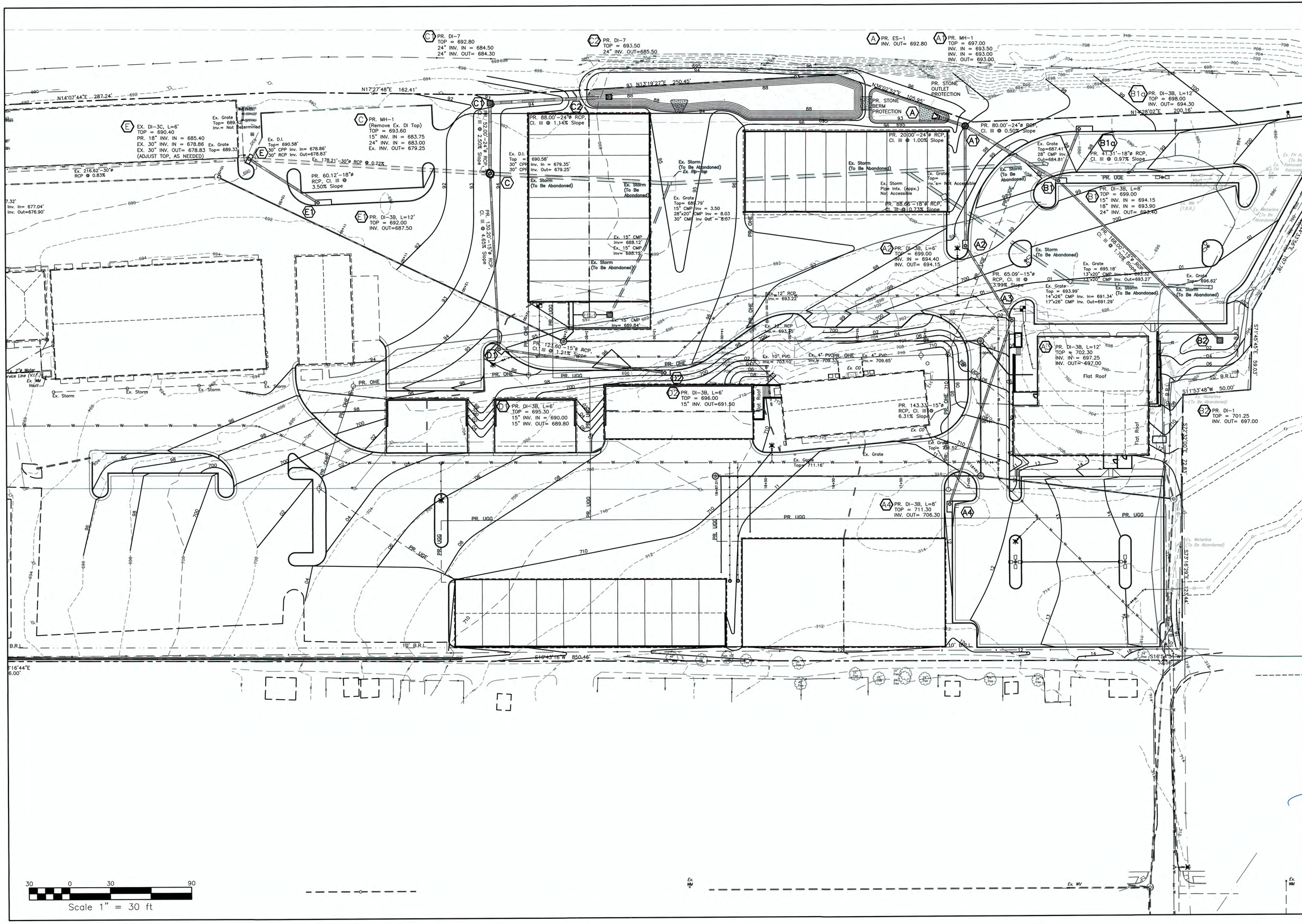

NO.	DATE	DESCRIPTION	BY

REVISIONS

TITLE:
CITY MAINTENANCE YARD
PROJECT B
UTILITY CONSTRUCTION PROJECT:
STORM SEWER SYSTEM
CORK STREET AREA

CITY OF WINCHESTER, VIRGINIA
CITY MAINTENANCE YARD
SITE IMPROVEMENTS
301 EAST CORK STREET
CITY OF WINCHESTER, VIRGINIA

PAINTER-LEWIS, P.L.C.
817 CEDAR CREEK GRADE, SUITE 120
WINCHESTER, VIRGINIA 22601
Telephone: (540) 662-5792
Facsimile: (540) 662-5793
Email: office@pointelewis.com
CONSULTING ENGINEERS

COMMONWEALTH OF VIRGINIA
TIMOTHY G. PAINTER
Lic. No. 018260
07/19/19
PROFESSIONAL ENGINEER

SURVEY: P-L, PLC.	C.I.: 2'
DRAWN BY: TGP	JOB NO.: 1801014
SCALE: 1"=30'	DATE: 08/20/18
SHEET: B2	

SITE DRAINAGE AREAS TABULATION:

C2 INDICATES RELATED DRAINAGE AREAS

DRAINAGE AREA A2: AREA: 0133 Ac. C: 0.85 Tc: 5 Min. Q10: 0.77 cfs	DRAINAGE AREA B1: AREA: 1.254 Ac. C: 0.70 Tc: 10 Min. Q10: 4.83 cfs	DRAINAGE AREA C1: AREA: 0.166 Ac. C: 0.75 Tc: 5 Min. Q10: 0.85 cfs	DRAINAGE AREA D1: AREA: 0.275 Ac. C: 0.80 Tc: 5 Min. Q10: 1.50 cfs	DRAINAGE AREA E: AREA: 0.622 Ac. C: 0.80 Tc: 10 Min. Q10: 2.74 cfs	DRAINAGE AREA M-1: AREA: 5.502 Ac. C: 0.45 Tc: 40 Min. Q10: 6.19 cfs	DRAINAGE AREA O: AREA: 0.834 Ac. C: 0.80 Tc: 10 Min. Q10: 3.67 cfs	DRAINAGE AREA - SITE: AREA: 11.145 Ac. C: 0.67 Tc: 25 Min. Q10: 25.39 cfs (PRE-DEVELOPMENT)	
DRAINAGE AREA A3: AREA: 0.405 Ac. C: 0.85 Tc: 10 Min. Q10: 1.90 cfs	DRAINAGE AREA B1a: AREA: 2.081 Ac. C: 0.65 Tc: 15 Min. Q10: 6.22 cfs	DRAINAGE AREA C2: AREA: 1.566 Ac. C: 0.65 Tc: 10 Min. Q10: 5.60 cfs	DRAINAGE AREA D2: AREA: 0.483 Ac. C: 0.80 Tc: 7 Min. Q10: 2.40 cfs	DRAINAGE AREA E1: AREA: 0.692 Ac. C: 0.80 Tc: 7 Min. Q10: 3.43 cfs	DRAINAGE AREA N-1: AREA: 0.187 Ac. C: 0.85 Tc: 5 Min. Q10: 1.08 cfs		DRAINAGE AREA - SITE: AREA: 11.145 Ac. C: 0.70 Tc: 23 Min. Q10: 28.55 cfs (POST-DEVELOPMENT)	
DRAINAGE AREA A4: AREA: 0.770 Ac. C: 0.75 Tc: 10 Min. Q10: 3.18 cfs	DRAINAGE AREA B2: AREA: 0.868 Ac. C: 0.65 Tc: 15 Min. Q10: 2.60 cfs			DRAINAGE AREA Ex: AREA: 0.542 Ac. C: 0.85 Tc: 5 Min. Q10: 3.14 cfs	DRAINAGE AREA N2: AREA: 1.411 Ac. C: 0.80 Tc: 15 Min. Q10: 5.19 cfs			

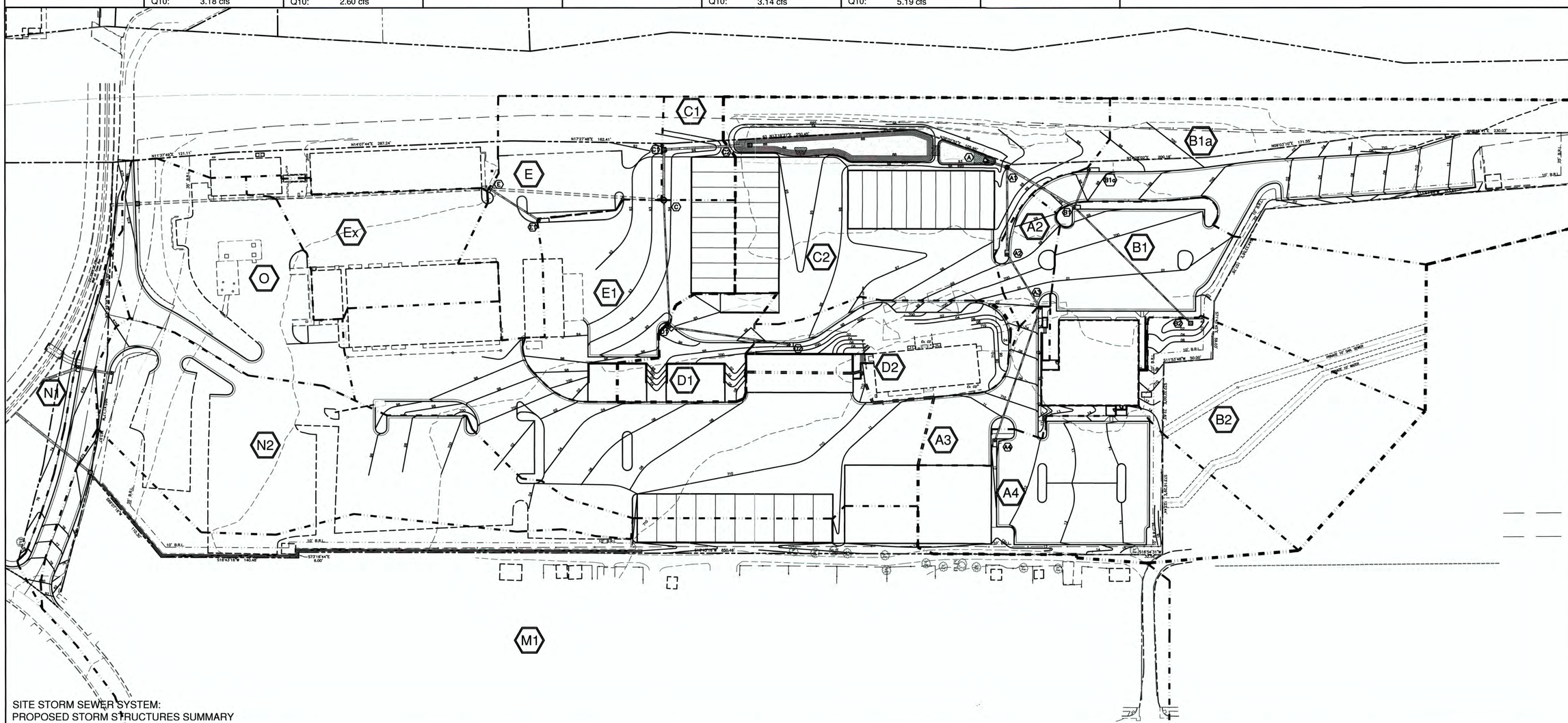

SITE STORM SEWER SYSTEM: PROPOSED STORM STRUCTURES SUMMARY

A PR. 24"Ø ES-1 PR. 24"Ø INV. OUT = 692.80 A1 PR. MH-1 Top = 697.00 PR. 18"Ø INV. IN = 693.50 PR. 24"Ø INV. IN = 693.00 PR. 24"Ø INV. OUT=693.00 A2 PR. DI-3B, L=6' Top = 699.00 PR. 15"Ø INV. IN = 694.40 PR. 18"Ø INV. OUT=694.15 A3 PR. DI-3B, L=12' Top = 702.30 PR. 15"Ø INV. IN = 697.25 PR. 15"Ø INV. OUT=697.00	A4 PR. DI-3B, L=8' Top = 711.30 PR. 15"Ø INV. OUT=706.30	B1 PR. DI-3B, L=8' Top = 699.00 PR. 15"Ø INV. IN = 694.15 PR. 18"Ø INV. IN = 693.90 PR. 24"Ø INV. OUT=693.40 B1a PR. DI-3B, L=12' Top = 698.00 PR. 18"Ø INV. OUT=694.30 B3 PR. DI-1 Top = 701.25 PR. 15"Ø INV. OUT=697.00	C PR. MH-1 (Remove Ex. DI) Top = 693.60 (Raise as Needed) PR. 15"Ø INV. IN = 683.75 PR. 24"Ø INV. IN = 683.00 EX. 30"Ø INV. OUT=679.25 C1 PR. DI-7 Top = 692.80 PR. 24"Ø INV. IN = 684.55 PR. 24"Ø INV. OUT=684.30 C2 PR. DI-7 Top = 693.50 PR. 24"Ø INV. OUT=685.50	D1 PR. DI-3B, L=6' Top = 695.20 PR. 15"Ø INV. IN = 689.90 PR. 15"Ø INV. OUT=689.70 D2 PR. DI-3B, L=6' Top = 696.00 PR. 15"Ø INV. OUT=691.50	E EX. DI-3C, L=8' Top = 690.40 PR. 15"Ø INV. IN = 685.40 EX. 30"Ø INV. IN = 678.86 EX. 30"Ø INV. OUT=678.83 E1 PR. DI-3B, L=12' Top = 692.00 PR. 15"Ø INV. OUT=687.50	M EX. END WALL Top = 673.10 PR. 23"x14" INV. OUT=671.00 M1 PR. DI-1 Top = 694.00 PR. 23"x14" INV. OUT= 671.50	N EX. END WALL Top = 673.29 PR. 30"x19" INV. OUT=671.20 N1 PR. DI-3B, L=8' Top = 675.00 PR. 23"x14" INV. IN = 671.30 PR. 30"x19" INV. OUT=671.30 N2 PR. DI-3B, L=12' Top = 675.00 PR. 23"x14" INV. OUT=671.50	O PR. DI-1 (Modified) Top = 674.50 EX. INV. OUT=672.30 (Verify Inverts in Field)

50 0 50 150

Scale 1" = 50 ft

NO.	DATE	DESCRIPTION	BY
		REVISIONS	

TITLE: CITY MAINTENANCE YARD
PROJECT B
UTILITY CONSTRUCTION PROJECT:
STORM SEWER SYSTEM
DRAINAGE DIVIDES PLAN

CITY OF WINCHESTER, VIRGINIA
CITY MAINTENANCE YARD
SITE IMPROVEMENTS
301 EAST CORK STREET
CITY OF WINCHESTER, VIRGINIA

PAINTER-LEWIS, P.L.C.
817 CEDAR CREEK GRADE, SUITE 120
WINCHESTER, VIRGINIA 22601
Telephone: (540) 662-5792
Facsimile: (540) 662-5793
Email: office@pointelewis.com
CONSULTING ENGINEERS

COMMONWEALTH OF VIRGINIA
TIMOTHY C. PAINTER
Lic. No. 018260
07/19/19
PROFESSIONAL ENGINEER

SURVEY: P-L, PLC.	C.I.: 2'
DRAWN BY: TGP	JOB NO.: 1801014
SCALE: 1"=50'	DATE: 08/20/18
SHEET:	B3

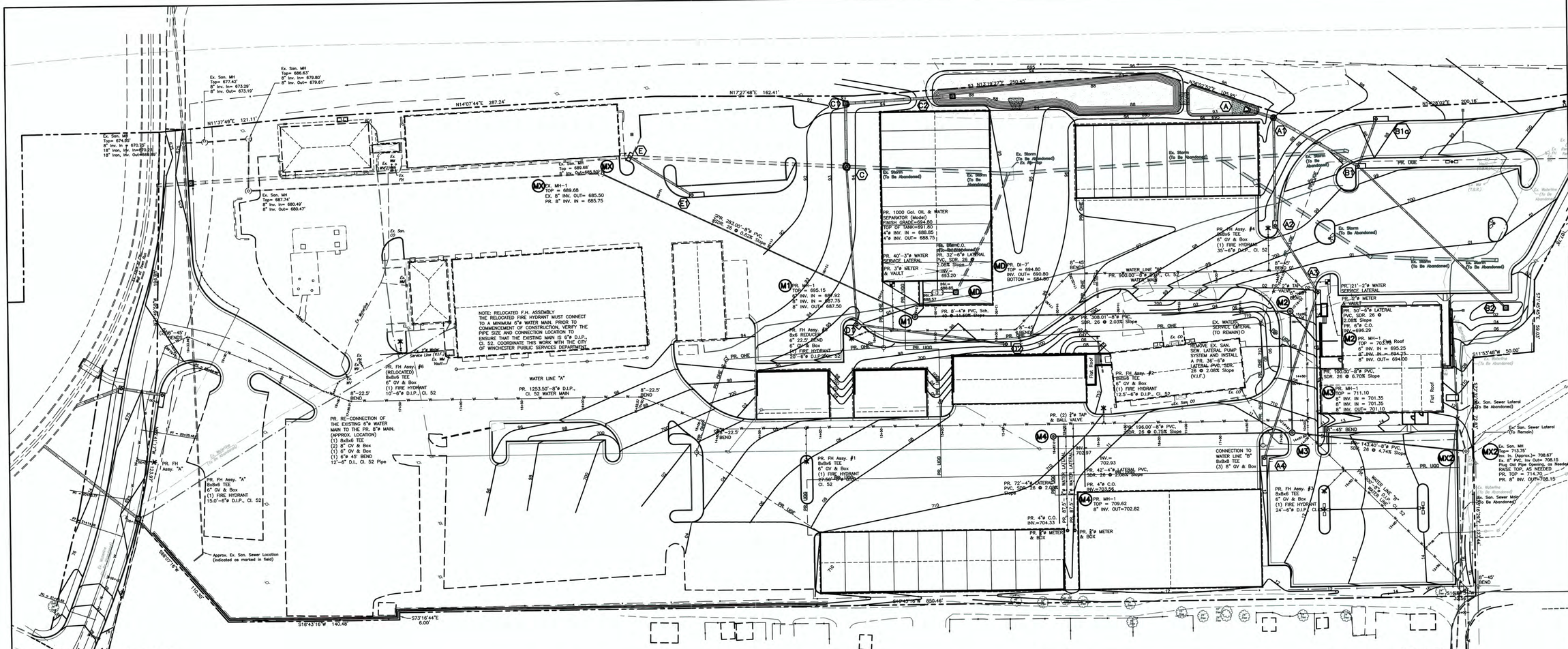
Ex. San. MH
Top= 674.55'
8" Inv. In= 670.35'
18" Iron, Inv. In=670.25'
18" Iron, Inv. Out=669.95'
Ex. San. MH
Top= 677.42'
8" Inv. In= 673.29'
8" Inv. Out= 673.19'
Ex. San. MH
Top= 686.63'
8" Inv. In= 679.80'
8" Inv. Out= 679.61'
Ex. San. MH
Top= 687.74'
8" Inv. In= 680.49'
8" Inv. Out= 680.47'
Ex. San. MH
Top= 689.68'
8" Inv. Out=685.50'
EX. MH-1
TOP = 689.68
EX. 8" INV. OUT= 685.50
PR. 8" INV. IN = 685.75
N11°37'49"E 121.11'
N14°07'44"E 287.24'
N17°27'48"E 162.41'
N13°19'27"E 250.45'
N16°02'32"E 105.95'
N11°28'02"E 200.16'
S11°53'48"W 50.00'
S16°43'16"W 140.48'
S73°16'44"E 6.00'
S16°40'16"W 850.46'
S60°07'16"W 110.30'
PR. 283.00'-8"ø PVC, SDR. 26 @ 0.75% Slope
PR. 1000 Gal. OIL & WATER SEPARATOR (Model FINISH GRADE=694.80 TOP OF TANK=691.80 4"ø INV. IN = 688.85 4"ø INV. OUT= 688.75
PR. 40'-3"ø WATER SERVICE LATERAL
PR. 3"ø METER & VAULT
PR. 8"-4"ø PVC, Sch. 40 @ 11.50% Slope
PR. DI-7
TOP = 694.80
INV. OUT= 690.80
BOTTOM = 684.80
PR. 8"-45° BENDS
WATER LINE "A"
PR. 1253.50'-8"ø D.I.P., Cl. 52 WATER MAIN
PR. 8"-22.5° BEND
PR. 8"-22.5° BEND
PR. RE-CONNECTION OF THE EXISTING 6"ø WATER MAIN TO THE PR. 8"ø MAIN. (APPROX. LOCATION)
(1) 8x8x6 TEE
(2) 8" GV & Box
(1) 6" GV & Box
(1) 6"ø 45° BEND
12'-6" D.I., Cl. 52 Pipe
PR. FH Assy. "A"
PR. FH Assy. "A"
8x8x6 TEE
6" GV & Box
(1) FIRE HYDRANT
15.0'-6"ø D.I.P., Cl. 52
Approx. Ex. San. Sewer Location (Indicated as marked in field)
PR. CONNECTION TO THE EXISTING 6"ø WATER MAIN (APPROX. LOCATION)
(1) 8x8x8 TEE
(3) 8" GV & Box
(2) 6x8 REDUCERS
16'-8"ø D.I., Cl. 52 PIPE
NOTE: RELOCATED F.H. ASSEMBLY
THE RELOCATED FIRE HYDRANT MUST CONNECT TO A MINIMUM 6"ø WATER MAIN. PRIOR TO COMMENCEMENT OF CONSTRUCTION, VERIFY THE PIPE SIZE AND CONNECTION LOCATION TO ENSURE THAT THE EXISTING MAIN IS 6"ø D.I.P., Cl. 52. COORDINATE THIS WORK WITH THE CITY OF WINCHESTER PUBLIC SERVICES DEPARTMENT.
PR. FH Assy. #6
(RELOCATED)
8x8x6 TEE
6" GV & Box
(1) FIRE HYDRANT
10'-6"ø D.I.P., Cl. 52
PR. FH Assy. #5
8x8x6 REDUCER
6" GV & Box
(1) FIRE HYDRANT
20'-6"ø D.I.P., Cl. 52
PR. FH Assy. #1
8x8x6 TEE
6" GV & Box
(1) FIRE HYDRANT
27.50'-6"ø D.I.P., Cl. 52
PR. 72'-4"ø LATERAL PVC, SDR. 26 @ 2.08% Slope
PR. 4"ø C.O. INV.=704.33
PR. 8"ø METER & BOX
PR. 4"ø C.O. INV.=703.56
PR. 8"ø METER & BOX
PR. MH-1
TOP = 709.62
8" INV. OUT=702.82
PR. FH Assy. #4
8x8x6 TEE
6" GV & Box
(1) FIRE HYDRANT
35'-6"ø D.I.P., Cl. 52
PR. 8"-45° BENDS
WATER LINE "A"
PR. 300.00'-8"ø D.I.P., Cl. 52 WATER MAIN
PR. (2) 2"ø TAP & BALL VALVE
PR. 308.01'-8"ø PVC, SDR. 26 @ 2.03% Slope
PR. 8"-45° BENDS
EX. WATER SERVICE LATERAL (TO REMAIN)
REMOVE EX. SAN. SEW. LATERAL PUMP SYSTEM AND INSTALL A PR. 30'-6"ø LATERAL PVC, SDR. 26 @ 2.08% Slope (V.I.F.)
PR. FH Assy. #2
8x8x6 TEE
6" GV & Box
(1) FIRE HYDRANT
12.5'-6"ø D.I.P., Cl. 52
PR. 196.00'-8"ø PVC, SDR. 26 @ 0.75% Slope
PR. 42'-4"ø LATERAL PVC, SDR. 26 @ 2.08% Slope
INV.= 702.97
INV.= 702.93
CONNECTION TO WATER LINE "B"
8x8x8 TEE
(3) 8" GV & Box
PR. FH Assy. #3
8x8x6 TEE
6" GV & Box
(1) FIRE HYDRANT
24'-6"ø D.I.P., Cl. 52
PR. 121'-2"ø WATER SERVICE LATERAL
PR. 2"ø METER & VAULT
PR. 2"ø TAP & VALVE
PR. 30'-6"ø LATERAL PVC, SDR. 26 @ 2.08% Slope
PR. 6"ø C.O. INV.=694.25
PR. MH-1
TOP = 707.44
6" INV. IN = 695.25
8" INV. IN = 694.25
8" INV. OUT= 694.00
PR. 100.00'-8"ø PVC, SDR. 26 @ 6.70% Slope
PR. MH-1
TOP = 711.10
8" INV. IN = 701.35
8" INV. IN = 701.35
8" INV. OUT= 701.10
PR. 143.40'-8"ø PVC, SDR. 26 @ 4.74% Slope
PR. 8"-45° BEND
WATER LINE "B"
PR. 300.00'-8"ø D.I.P.
Ex. San. Sewer Lateral (To Be Abandoned)
Ex. San. Sewer Lateral (To Remain)
Ex. San. MH
Top= 713.75'
Inv. In (Approx.)= 708.67'
Ex. 8" PVC, Inv Out= 708.15
Plug Old Pipe Opening as Needed
RAISE TOP, AS NEEDED
PR. TOP = 714.70
PR. 8" INV. OUT=708.15
Ex. San. Sewer Main (To Be Abandoned)
Ex. San. Sewer Main (To Be Abandoned)
Ex. Storm (To Be Abandoned)
Ex. Storm (To Be Abandoned)
Ex. Storm (To Be Abandoned)
Ex. Storm (To Be Abandoned)
Ex. Storm (To Be Abandoned)
Ex. Storm (To Be Abandoned)
Ex. Storm (To Be Abandoned)
Ex. Storm (To Be Abandoned)
Ex. Storm (To Be Abandoned)
Ex. Waterline (To Be Abandoned)
Ex. Waterline (To Be Abandoned)
Ex. Waterline (To Be Abandoned)
Ex. Waterline (To Be Abandoned)
Ex. Waterline (To Be Abandoned)
Ex. Waterline (To Be Abandoned)
Ex. Waterline (To Be Abandoned)
Ex. Waterline (To Be Abandoned)
PR. DGE
PR. OHE
PR. UGD
Flat Roof
Flat Roof
Flat Roof
Ex. San. Sewer Main (To Be Abandoned)
Ex. San. Sewer Main (To Be Abandoned)
Ex. San. Sewer Main (To Be Abandoned)

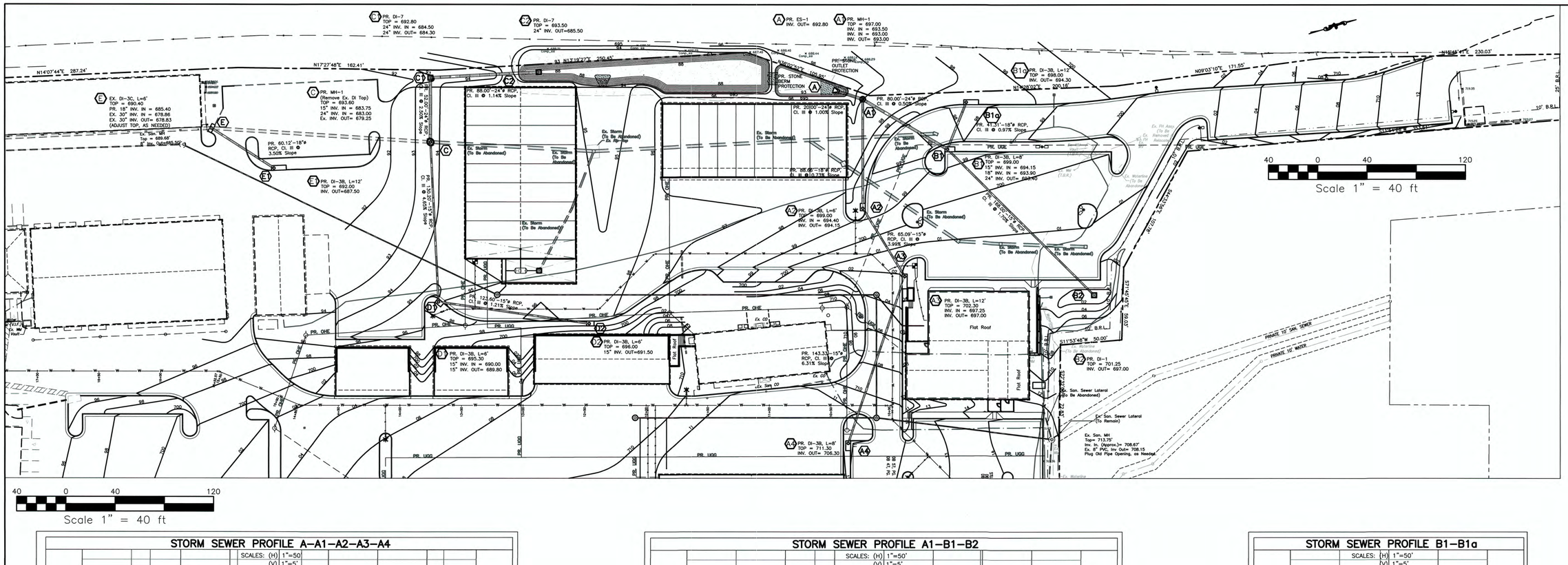

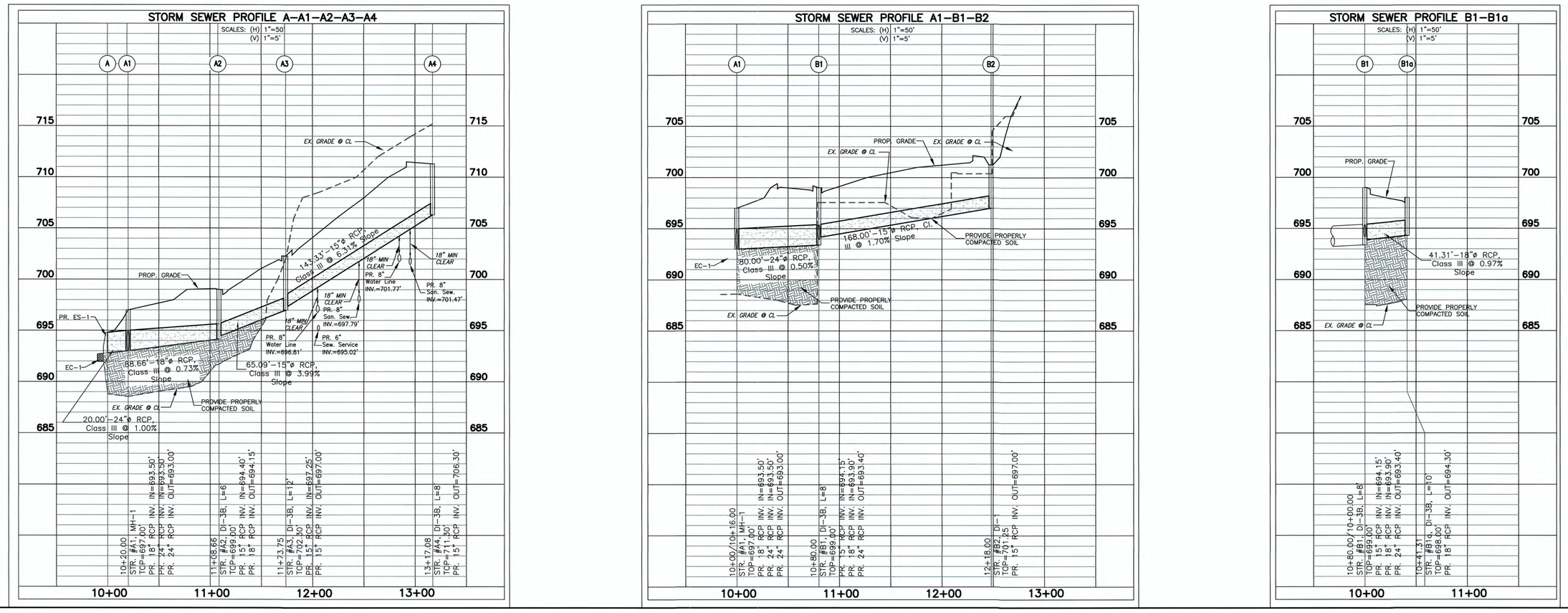

NO.	DATE	REVISIONS DESCRIPTION	BY

TITLE: CITY MAINTENANCE YARD
PROJECT B
UTILITY CONSTRUCTION PROJECT:
STORM SEWER PROFILES
A-A1-A2-A3-A4, A1-B1-B2,
and B1-B1a

CITY OF WINCHESTER, VIRGINIA
CITY MAINTENANCE YARD
SITE IMPROVEMENTS
301 EAST CORK STREET
CITY OF WINCHESTER, VIRGINIA

PAINTER-LEWIS, P.L.C.
817 CEDAR CREEK GRADE, SUITE 120
WINCHESTER, VIRGINIA 22601
Telephone: (540) 662-5792
Facsimile: (540) 662-5793
Email: office@painterlewis.com
CONSULTING ENGINEERS

COMMONWEALTH OF VIRGINIA
TIMOTHY B. PAINTER
Lic. No. 018260
07/19/19
PROFESSIONAL ENGINEER

SURVEY: P-L, PLC.	C.I.: 2'
DRAWN BY: TGP	JOB NO.: 1801014
SCALE: 1"=50'	DATE: 08/20/18
SHEET:	B5

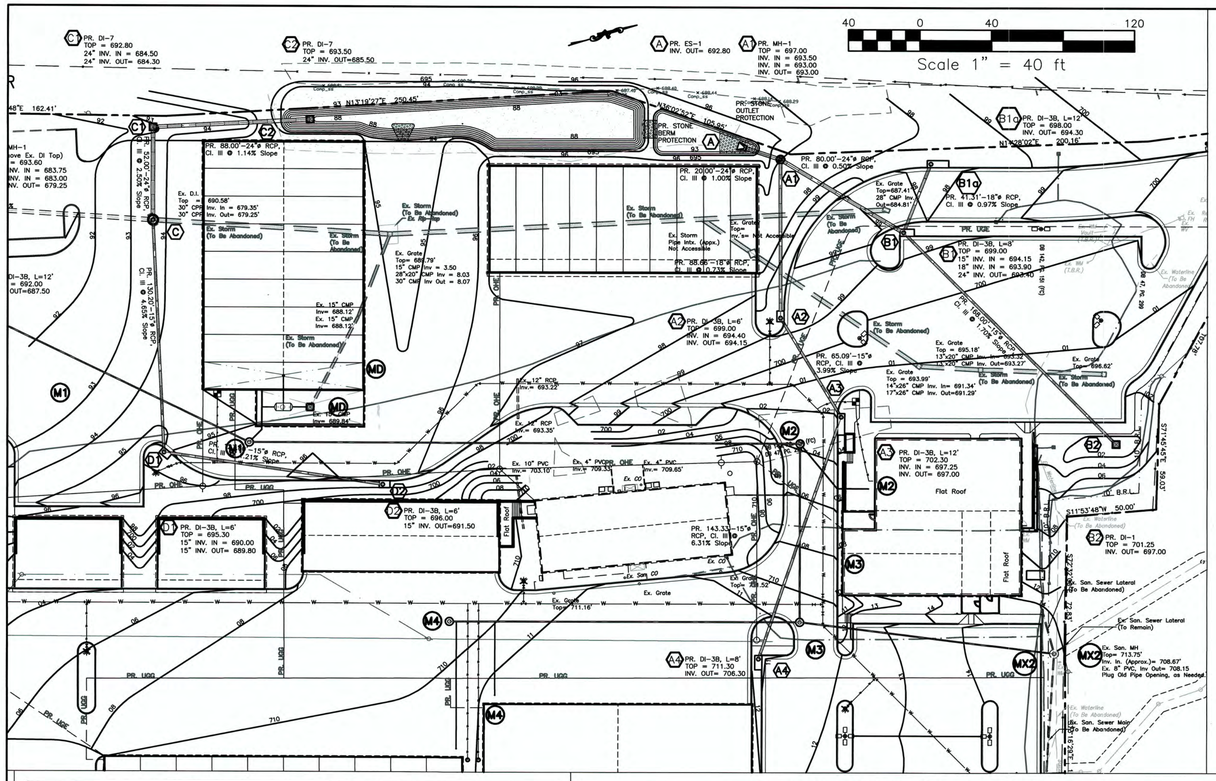

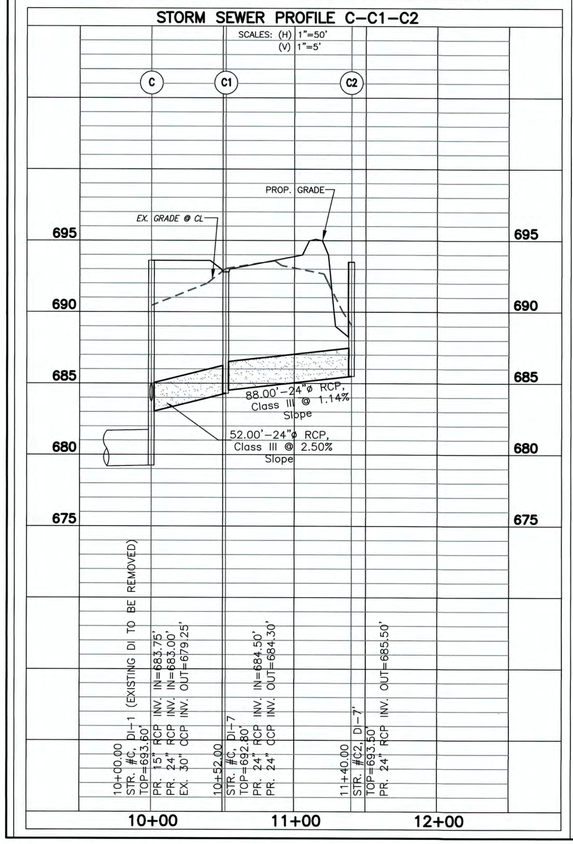

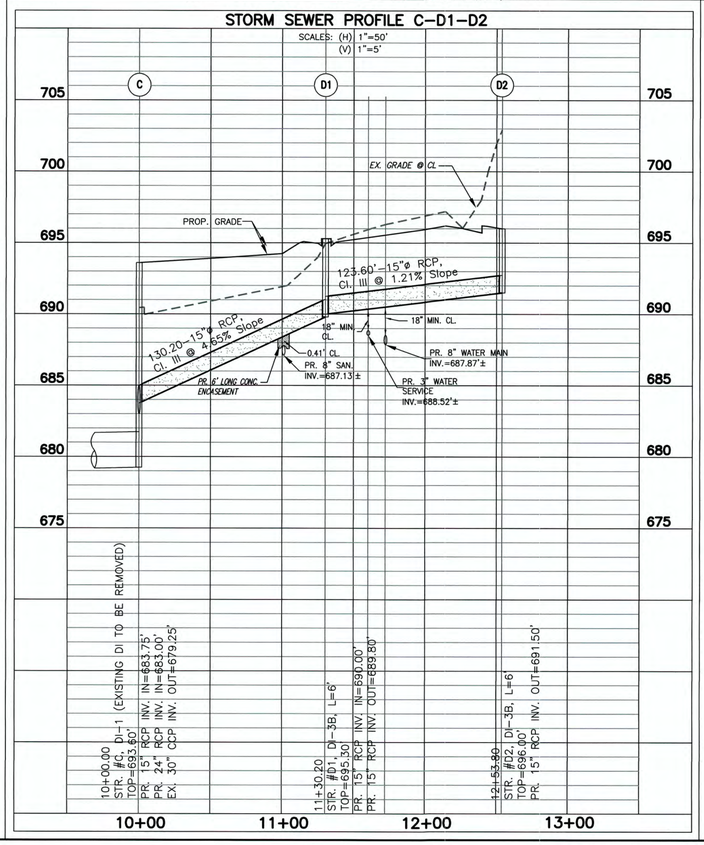

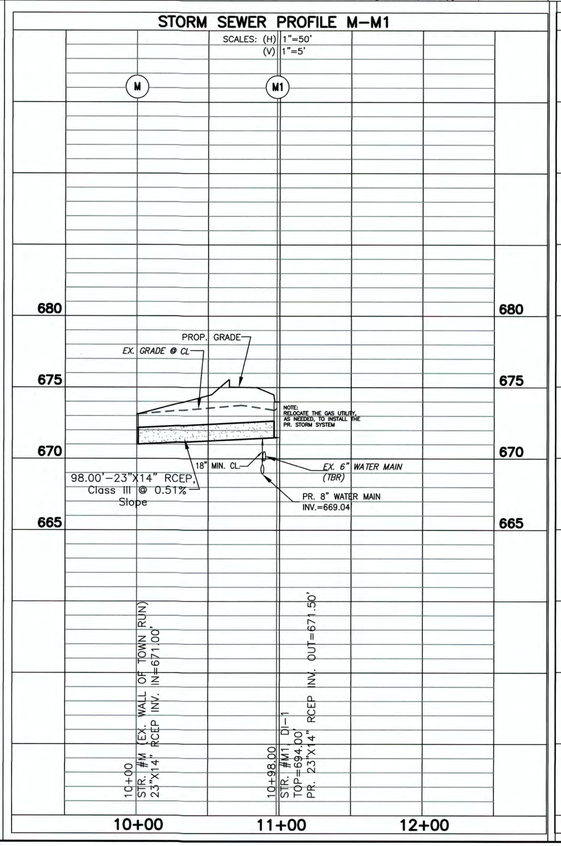

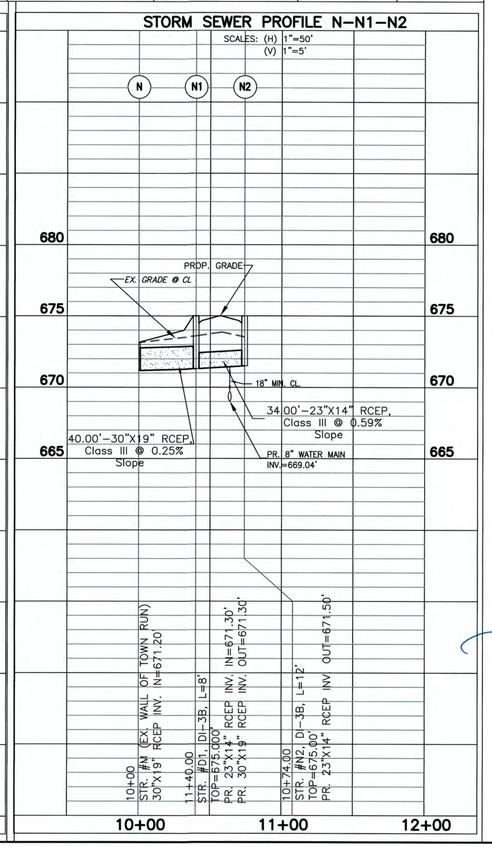

NO.	DATE	DESCRIPTION	BY

REVISIONS

TITLE: CITY MAINTENANCE YARD PROJECT B UTILITY CONSTRUCTION PROJECT: STORM SEWER PROFILE C-C1-C2, C-D1-D2, M-M1, and N-N1-N2

CITY OF WINCHESTER, VIRGINIA
CITY MAINTENANCE YARD
SITE IMPROVEMENTS
301 EAST CORK STREET
CITY OF WINCHESTER, VIRGINIA

PAINTER-LEWIS, P.L.C.
817 CEDAR CREEK GRADE, SUITE 120
WINCHESTER, VIRGINIA 22601
Telephone: (540) 662-5792
Facsimile: (540) 662-5793
Email: office@painterlewis.com
CONSULTING ENGINEERS

COMMONWEALTH OF VIRGINIA
TIMOTHY C. PAINTER
Lic. No. 018260
07/19/19
PROFESSIONAL ENGINEER

SURVEY: P-L, PLC.	C.I.: 2'
DRAWN BY: TGP	JOB NO.: 1801014
SCALE: 1"=50'	DATE: 08/20/18
SHEET:	B6

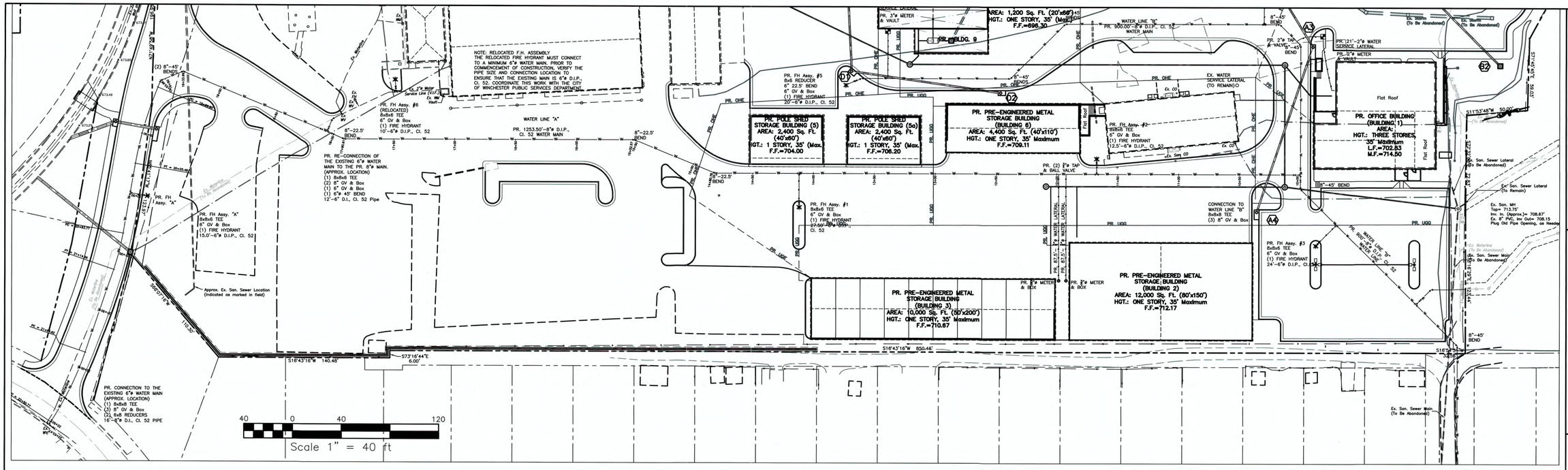

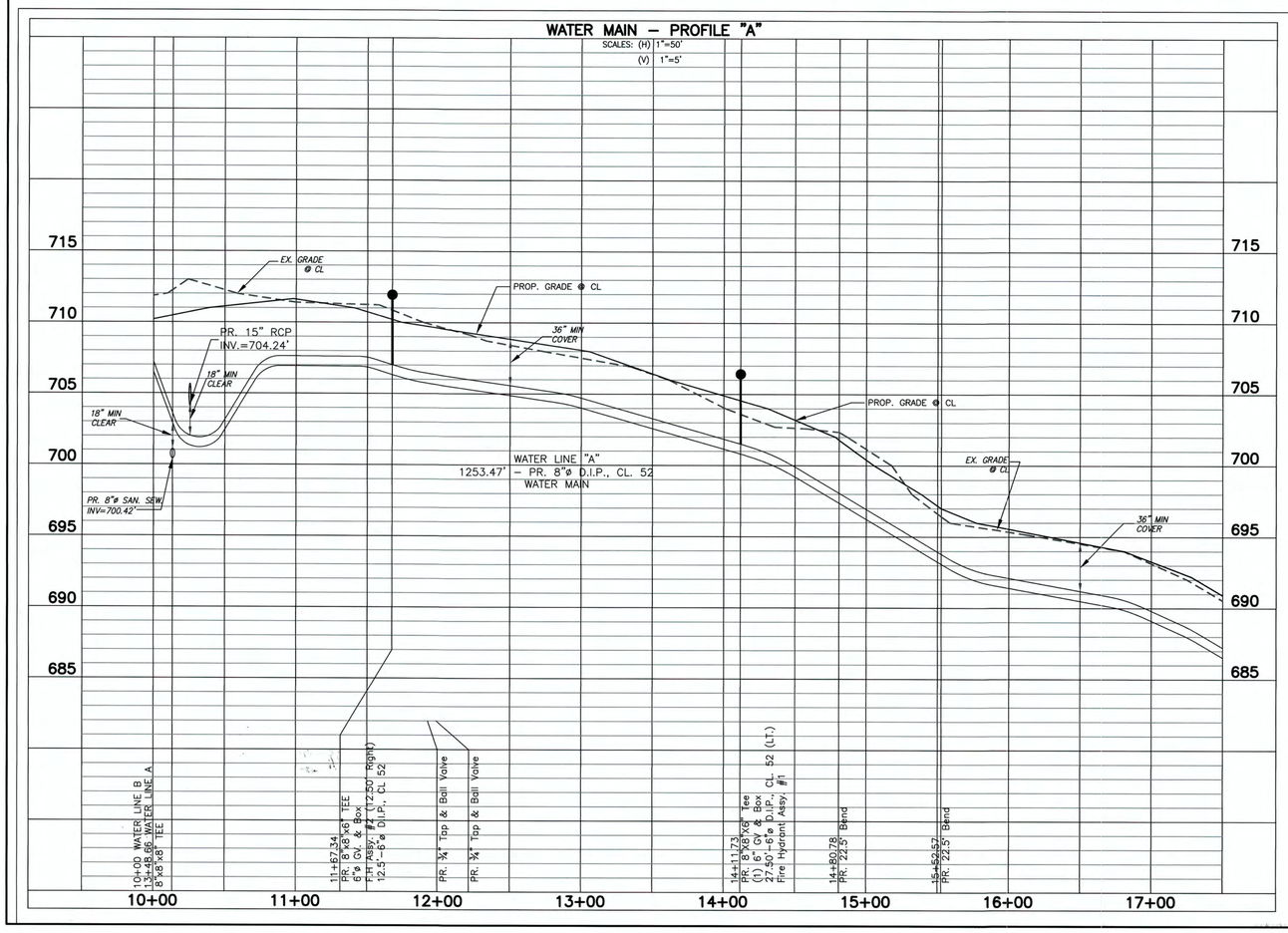

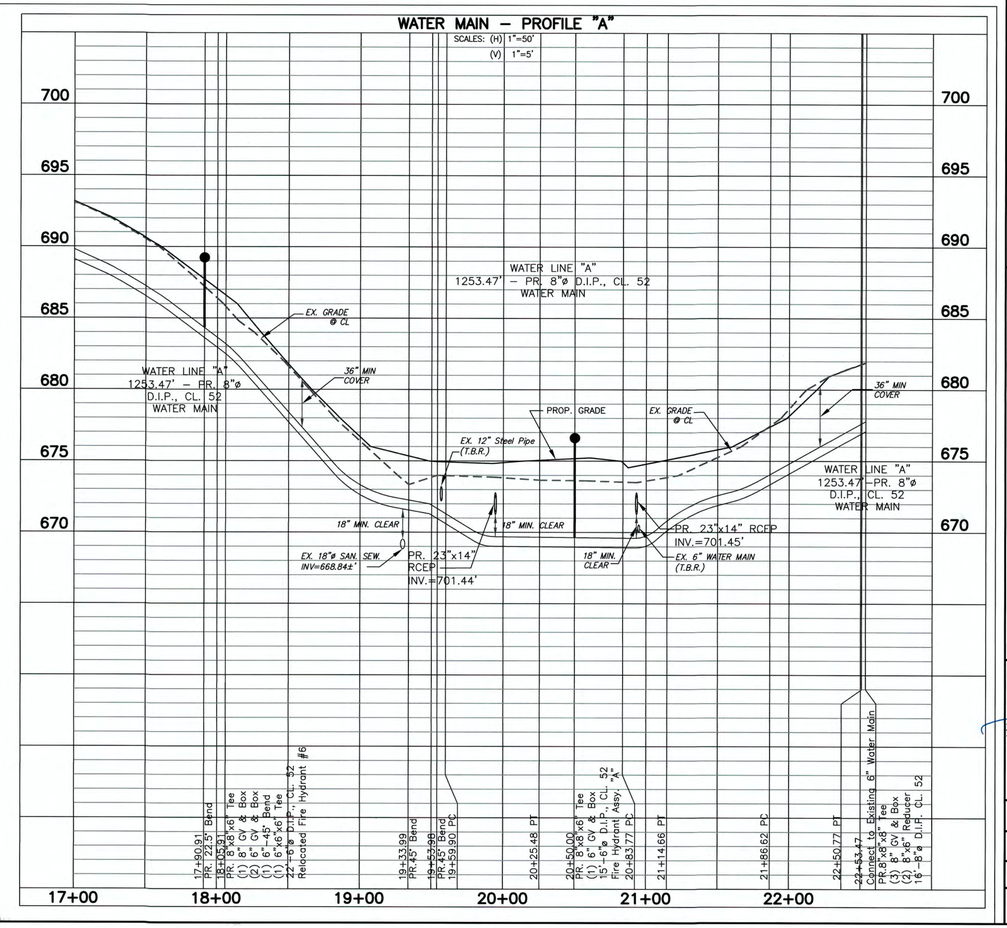

NO.	DATE	DESCRIPTION	BY

REVISIONS

TITLE: CITY MAINTENANCE YARD
PROJECT B
UTILITY CONSTRUCTION PROJECT:
WATER LINE A PROFILE
10+00 – 22+53.47

CITY OF WINCHESTER, VIRGINIA
CITY MAINTENANCE YARD
SITE IMPROVEMENTS
301 EAST CORK STREET
CITY OF WINCHESTER, VIRGINIA

PAINTER-LEWIS, P.L.C.
817 CEDAR CREEK GRADE, SUITE 120
WINCHESTER, VIRGINIA 22601
Telephone: (540) 662-5792
Facsimile: (540) 662-5793
Email: office@pointelewis.com
CONSULTING ENGINEERS

COMMONWEALTH OF VIRGINIA
TIMOTHY G. PAINTER
Lic. No. 018260
07/19/19
PROFESSIONAL ENGINEER

SURVEY: P-L, PLC.	C.I.: 2'
DRAWN BY: TGP	JOB NO.: 1801014
SCALE: 1"=50'	DATE: 08/20/18
SHEET: B7	

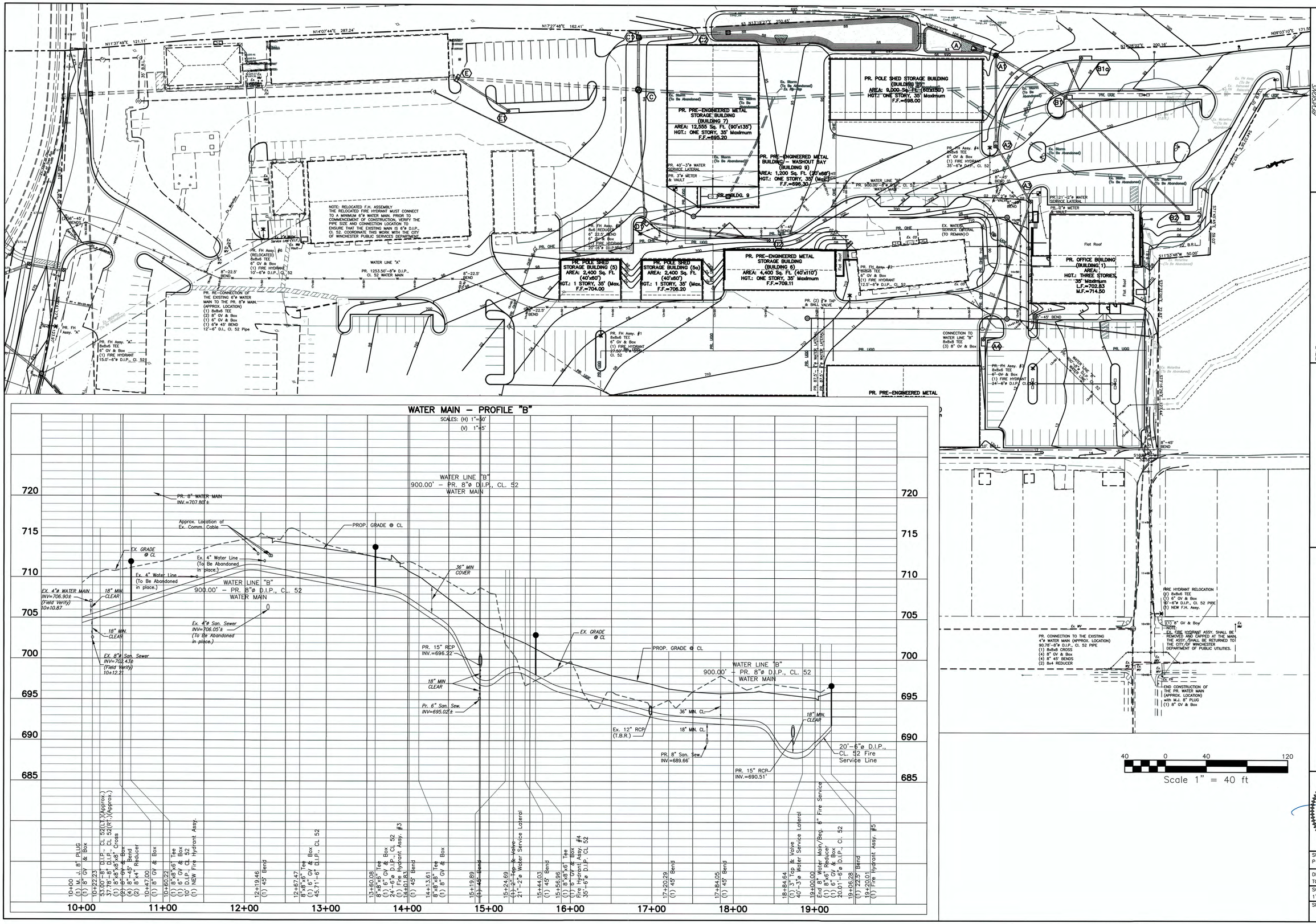

NO.	DATE	DESCRIPTION	BY

REVISIONS

TITLE: CITY MAINTENANCE YARD
PROJECT B
UTILITY CONSTRUCTION PROJECT:
WATER LINE PROFILE B
10+00 – 19+00

CITY OF WINCHESTER, VIRGINIA
CITY MAINTENANCE YARD
SITE IMPROVEMENTS
301 EAST CORK STREET
CITY OF WINCHESTER, VIRGINIA

PAINTER-LEWIS, P.L.C.
817 CEDAR CREEK GRADE, SUITE 120
WINCHESTER, VIRGINIA 22601
Telephone: (540) 662-5792
Facsimile: (540) 662-5793
Email: office@painterlewis.com
CONSULTING ENGINEERS

COMMONWEALTH OF VIRGINIA
TIMOTHY S. PAINTER
Lic. No. 018260
07/19/19
PROFESSIONAL ENGINEER

SURVEY: P-L, PLC.	C.I.: 2'
DRAWN BY: TGP	JOB NO.: 1801014
SCALE: 1"=50'	DATE: 08/20/18
SHEET:	B8

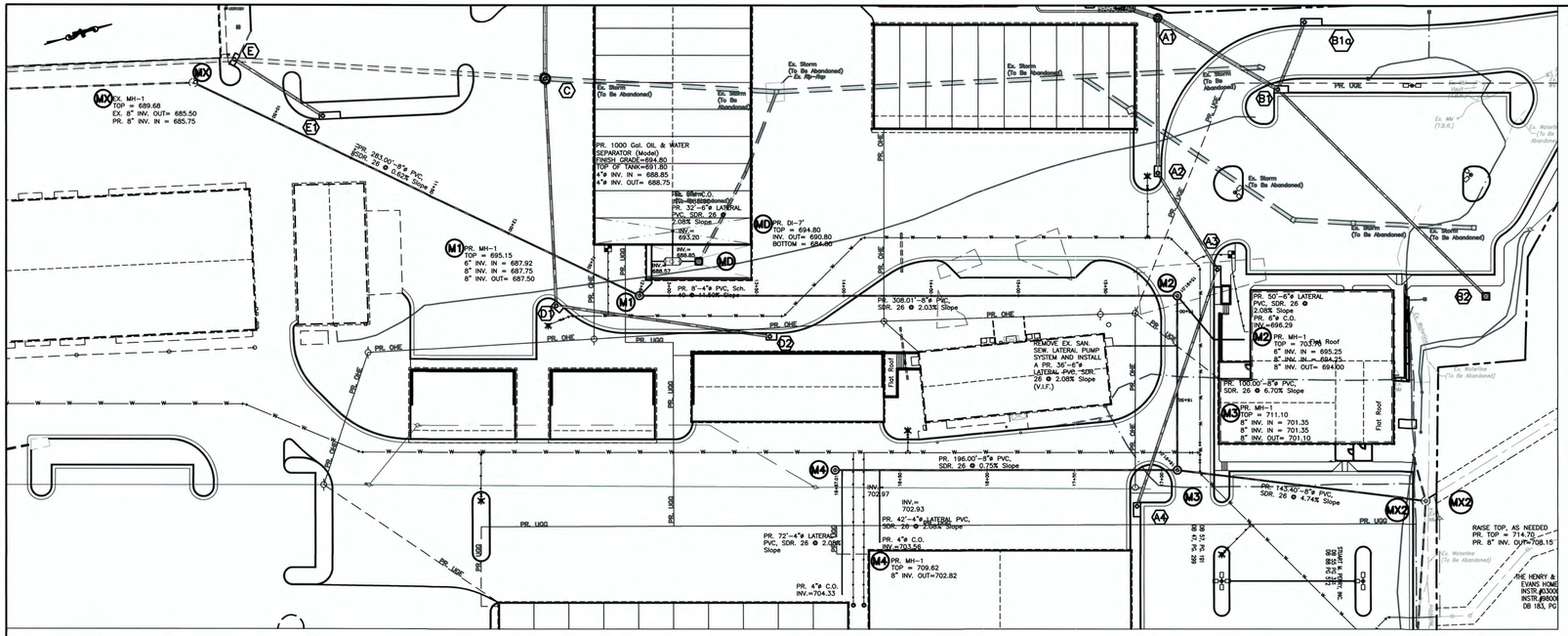

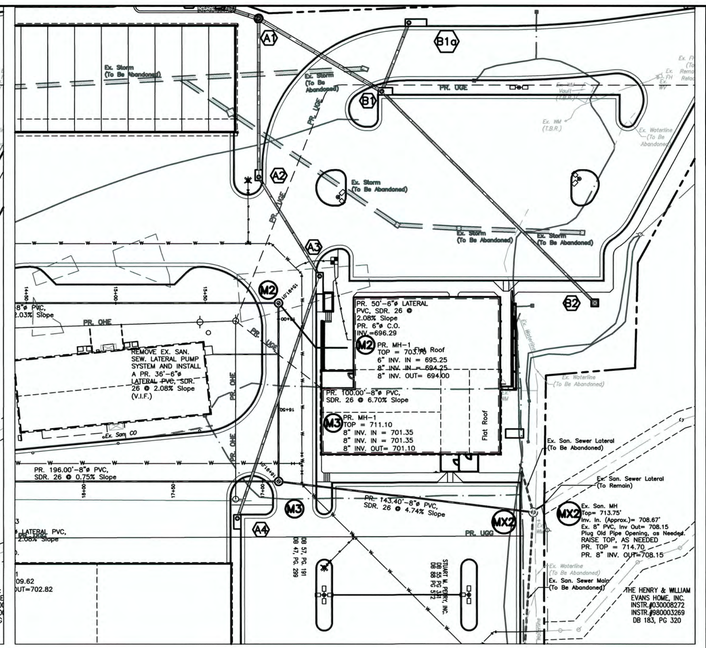

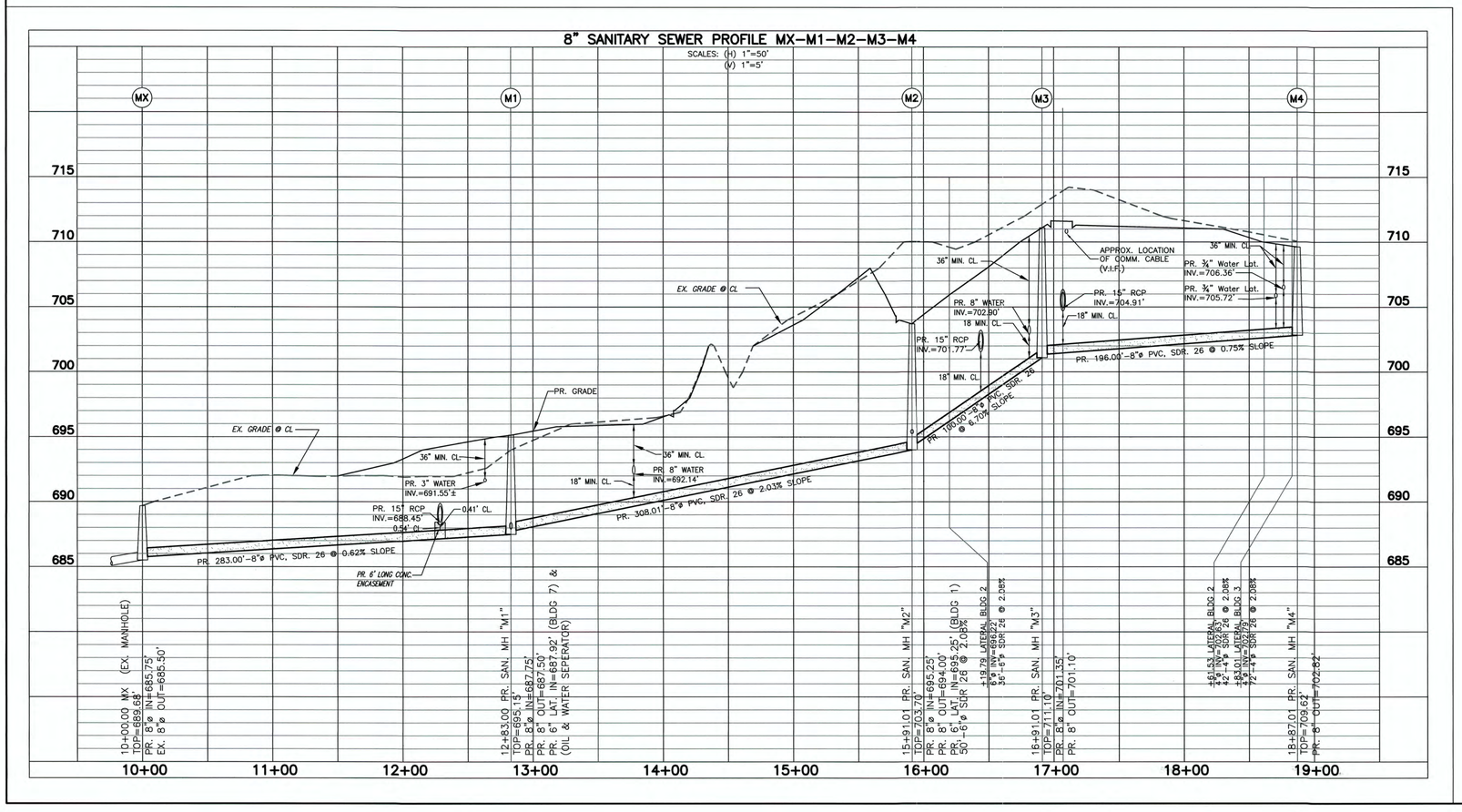

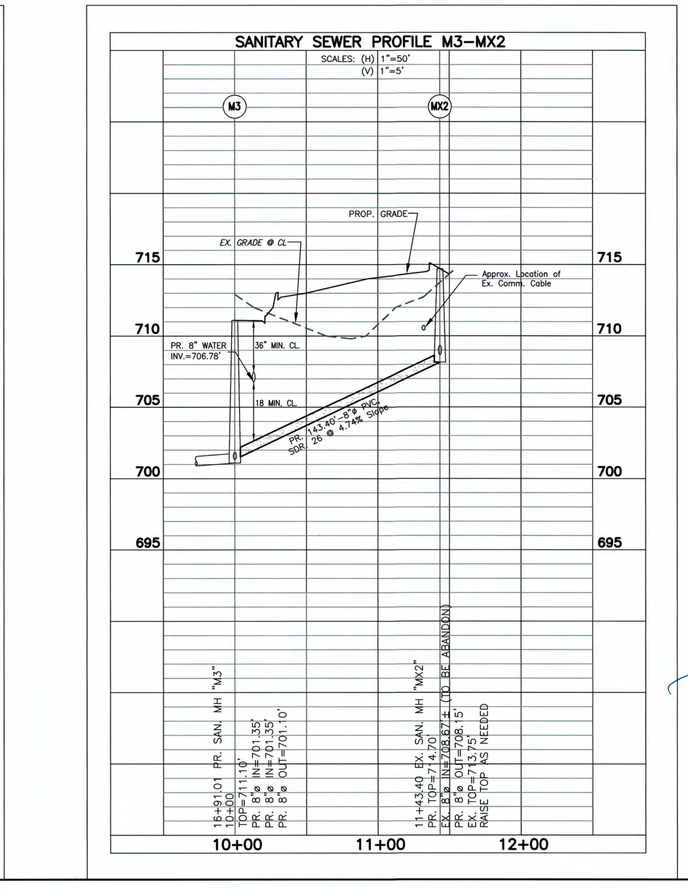

NO.	DATE	DESCRIPTION	BY

REVISIONS

TITLE: CITY MAINTENANCE YARD
PROJECT B
UTILITY CONSTRUCTION PROJECT:
SANITARY SEWER PROFILE
MX-M1-M2-M3-M4

CITY OF WINCHESTER, VIRGINIA
CITY MAINTENANCE YARD
SITE IMPROVEMENTS
301 EAST CORK STREET
CITY OF WINCHESTER, VIRGINIA

PAINTER-LEWIS, P.L.C.
817 CEDAR CREEK GRADE, SUITE 120
WINCHESTER, VIRGINIA, 22601
Telephone: (540) 662-5792
Facsimile: (540) 662-5793
Email: office@painterlewis.com
CONSULTING ENGINEERS

COMMONWEALTH OF VIRGINIA
TIMOTHY C. PAINTER
Lic. No. 018260
07/19/19
PROFESSIONAL ENGINEER

SURVEY: P-L, PLC.	C.I.: 2'
DRAWN BY: TGP	JOB NO.: 1801014
SCALE: 1"=50'	DATE: 08/20/18
SHEET: B9	