August 2, 2019

ADDENDUM #1

NOTICE TO ALL BIDDERS FOR
CITY OF WINCHESTER

ITB #201924 – Street Paving-Related Concrete Improvements

This Addendum forms a part of the Contract Documents and modifies the original bidding documents for ITB #201924 dated July 2019. *Bidders shall acknowledge receipt of the Addendum in the space provided on the Bid Form and return a signed copy with your bid.*

This Addendum consists of 14 total pages. The following information shall modify and clarify the Contract Documents:

1. The Bid Form has been modified to reflect the following:
    a. Pay items #8-10 have been removed. City will be providing all new manhole frames and covers and contractor will be responsible for raising them and installing the concrete collars.
    b. Pay Items #11 – 13 have been modified to indicate that the City will provide the new frames and covers.
    c. Pay Item #14 has been added to include raised manhole frames and covers in VDOT-owned streets

2. The technical specification for Concrete has been modified to reflect the following:
    a. On page 5, a detail number SS-7 has been added to the Manhole Cover Adjustment Detail.
    b. On page 6, standard detail SS-7A, VDOT Right-of-Way Manhole Cover Standard Detail, has been inserted.
    c. On page 7, the pay item description for "New Manhole Frame & Cover and Install Concrete Collar around Manholes (Street Type)" has been deleted.
    d. On page 7, the pay item description for "Raise Manhole Frame & Cover and Install Concrete Collar around Manholes (Street Type)" has been modified to show that the City will provide new frames and covers for manholes needing to be raised.
    e. On page 7, the pay item for "New Manhole Frame & Cover and Install Concrete Collar around Manholes (Street Type)" has been deleted.

This Addendum must be signed and returned to the Finance Department – Purchasing Division, 4th Floor Rouss City Hall, 15 North Cameron Street, Winchester, VA 22601 by **2:00pm local time on Wednesday, August 21, 2019** with your BID.

Receipt of Addendum #1 to Invitation to Bid #201924 is acknowledged by my signature below:

Company Name: _____

Authorized Representative: _____

Address: _____

Telephone: _____ FAX: _____

BID FORM
Street Paving-Related Concrete Improvements
ITB# 201924
Updated 8-2-19

This Bid is submitted to:

City of Winchester, Virginia
Finance Department - Purchasing Division
Rouss City Hall, 4th Floor
15 North Cameron Street
Winchester, Virginia 22601

In submitting this Bid, bidder acknowledges that the bidder has examined copies of the following Contract Documents:

BIDDING DOCUMENTS

- Invitation to Bid
- Instructions to Bidders
- Bid Form
- Bid Bond
- Non-Collusion Affidavit
- Contract
- Performance Bond
- Labor and Material Payment Bond
- Notice of Intent to Award
- Notice of Award
- Notice to Proceed
- City of Winchester Required General Terms and Conditions
- General Conditions
- Supplement to General Conditions
- Special Terms and Conditions

TECHNICAL SPECIFICATIONS

- Scope of Work – Sequence of Construction
- Maintenance of Traffic
- Demolition
- Disposal of Materials
- Concrete
- Detectable Warning Surfaces

ADDENDA:

NUMBER	DESCRIPTION	DATE
_____	_____	_____
_____	_____	_____
_____	_____	_____

Receipt of all of above is hereby acknowledged.

CONTRACTOR: _____

BY (SIGNATURE): _____

NAME AND TITLE: _____

DATE: _____

BID ITEMS/QUANTITIES

(a) The Contractor shall provide all unit prices or lump sum prices for all bid items on the Bid Form herein. **If a unit price or lump sum price is omitted or left blank the bid and bidder shall be non-responsive.** The bid forms designate which prices are for *Install* only work, complete and in place, (i.e. assumes equipment and/ or materials will be supplied by the City). All other bid prices are for Furnish and Install work, complete and in place.

(b) The quantities shown for unit bid items are based upon the best information available at time of preparation of these bid documents, and are established for the purpose of obtaining a bid price. No adjustments to the bid prices based on changes to quantities will be considered. All bid prices will be held throughout the duration of the contract regardless of any increase or decrease in bid quantity.

(c) Emergency work shall be negotiated with a maximum allowable amount of 50% over the bid price by item. This excludes all lump sum bid items.

(d) All other bid items not listed or described in the Contract Documents will be negotiated between the City and the Contractor before the time of need. Once a negotiated price is established, it will be used for the remainder of the contract.

The undersigned Bidder proposes to complete all work in accordance with the Contract Documents for the following unit prices:

City of Winchester

Street Paving-Related Concrete Improvements – ITB #201924

BID TABLE

ITEM NO.	DESCRIPTION	ESTIMATED QUANTITY	UNIT	UNIT COST	TOTAL COST
1	Demolition of Existing Concrete Curb/Curb & Gutter, Includes Disposal	700	LF		
2	Demolition of Existing Concrete Sidewalk, Concrete Entrance or Brick Sidewalk, Includes Disposal	300	SY		
3	Standard Curb, CG-2 (Includes aggregate base course)	400	LF		
4	Combination Curb & Gutter, CG-6 (Includes aggregate base course)	400	LF		
5	Concrete Sidewalk, 4" Thick (Includes aggregate base course)	300	SY		
6	Brick Paver Sidewalks on 4" Concrete Base	50	SY		
7	Detectable Warning Surfaces, CG-12	40	SY		
8	DELETED				
9	DELETED				
10	DELETED				
11	Raise Manhole Frame and Cover and Install Concrete Collar around Manholes in City Arterial Streets (i.e. Pleasant Valley, Jubal Early, etc) – New Frames & Covers provided by City	1	EA		
12	Raise Manhole Frame and Cover and Install Concrete Collar around Manholes in City Collector Streets (i.e. Tevis Street, Fox Drive, etc) – New Frames & Covers Provided by City	1	EA		
13	Raise Manhole Frame and Cover and Install Concrete Collar around Manholes in City Local/Residential Streets – New Frames & Covers provided by City	7	EA		
14	Raise Manhole Frame and Cover and install Concrete Collar around Manholes in VDOT Local/Residential Streets – New Frames & Covers provided by City	50	EA		
TOTAL FOR ALL – BASE BID					

*Quantities in bid table are based on items to be completed in FY 2020. See drawing below for City streets where work is to be completed.

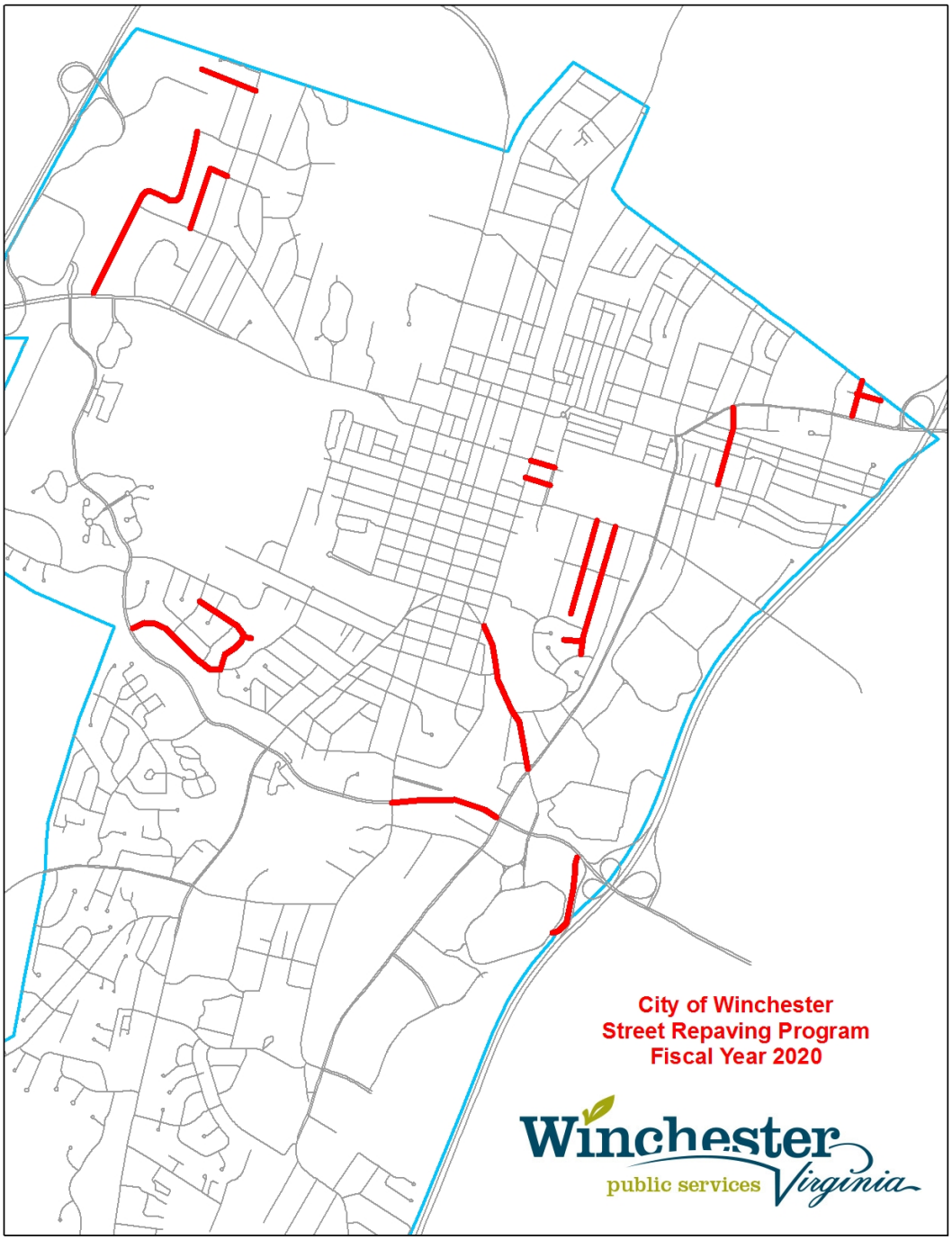

TOTAL BASE BID: $_____

IN WORDS:

_____

CONTRACTOR: _____

BY: (SIGNATURE) _____

NAME AND TITLE: _____

_____

DATE: _____

ADDRESS: _____

_____

_____

TELEPHONE: _____

CURRENT VIRGINIA CONTRACTOR REGISTRATION NUMBER: _____

NOTE: REQUIRED BID GUARANTEE MUST BE ENCLOSED WITH THIS BID PROPOSAL.

I. Description.

This work shall consist of furnishing and installing various concrete components including, but not limited to: curb, gutter, sidewalks and entrances.

II. Materials.

a) Subbase Material

1) Subbase materials shall be in conformance with VDOT Section 208, gradation size 21-A.

b) Concrete

1) Concrete for ADA improvements shall be Portland Cement air-entrained Class A4 Low Permeability (4,000 psi) with natural sand unless otherwise approved in writing by the Department of Public Services. Additives such as anti-freeze and calcium chloride are prohibited.
2) Concrete for Manhole Collars shall be Class A4 (4,000 psi) early strength concrete, surface coated with color hardener (black) by Increte Systems or approved equal.

c) Joint Filler

1) Joint filler shall be ½" preformed asphalt expansion joint material conforming to ASTM D994 or ASTM D1751.

d) Concrete Sealer

1) Sealer shall be Protectosil CHEM-TRETE 40 VOC by Evonik Industries or approved equal.

e) Detectable Warning Pavers

1) Truncated dome pavers used in all handicap accessible ramps shall be Hanover Detectable Warning Pavers, 11 ¾" x 11 ¾" x 2", Red 15 color, Tudor finish, or approved equal.

f) Brick

1) Brick sidewalks shall be constructed in the Historic District per standard details SW-2, SW-3 and SW-4. Bricks shall be Pine Hall Brick Pavers, Color – Pathway Full Range, or approved equal.

III. Procedures

a) Sidewalks and Entrances

1) After sidewalks have been removed, the contractor shall pour replacement sidewalks within 48 hours, weather permitting.
2) The contractor shall provide adequate access for abutting owners/tenants and shall keep all natural drainage unobstructed or provide equal courses effectively placed. The Contractor shall maintain access and drainage in such a manner to afford pedestrian access to houses or buildings.
3) Any drain pipe that is under the sidewalk being replaced and is damaged, broken, or clogged, shall be replaced with SDR 35 or greater PVC pipe.
4) Contractor shall provide concrete forms and pour the concrete in conformance with Section 504 of the VDOT specifications. Concrete shall not be poured until the forms have been inspected and approved by the Department of Public Services – Engineering Division.
5) Grades shall be established by the contractor. The subgrade shall be constructed to a minimum of two inches below the finished subgrade of the sidewalk. All soft and unsuitable materials shall be removed and replaced with suitable materials. The

subgrade shall be compacted by approved methods until a smooth, hard and dense surface is obtained.

6) Aggregate base shall be applied to a minimum of four inches thick on the subgrade, and shall be placed in conformance with Section 309 of the VDOT Specifications.
7) The concrete for all sidewalks shall have a minimum thickness of four inches, except at driveways, where the minimum thickness shall be 7 inches. The stone subgrade shall be moistened prior to the placing of concrete.
8) The depth of the sidewalk shall be as specified and shall not have a deficiency of more than one-quarter inch.
9) All concrete sidewalks shall be constructed so as to drain to the curb on a minimum slope of one-quarter inch per foot or a maximum slope of one-half inch per foot.
10) Expansion joints shall be constructed at intervals of 30 feet, except for closures, but a slab shall not be less than five feet in length. Slabs shall be separated by transverse premolded expansion joint filler for the full width of the slab, extending from the bottom of the slab to within one-quarter inch of its top surface. The slab between the expansion joints shall be divided into blocks 10 feet in length by scoring transversely. When slabs are more than seven feet in width, they shall be scored longitudinally to secure uniform blocks approximately square. Transverse and longitudinal scoring shall extend to at least one-third of the depth of the concrete slab. Scoring may be done with trowels, finishing and edging tools or by other approved means.
11) Where sidewalks are constructed adjacent to permanent structures or other rigid construction on one side and curb on the other, an expansion joint of premolded material extending along both the structure and the curb shall be placed for the full depth of the slab. A premolded expansion joint shall be placed between the sidewalk and adjacent sidewalk or curb at all intersections or crosswalks, both public and private. All premolded expansion joint filler shall be securely fastened to prevent displacement.
12) Where the sidewalk is constructed in conjunction with adjacent curb, the expansion joints in the curb and sidewalk shall coincide. Where such construction is adjacent to existing curb, the expansion joints shall, if practicable, coincide. Prior to placing concrete around any permanent structure, premolded expansion joint material shall be placed around such structure for the full depth of the sidewalk.
13) Where existing or proposed structures, such as light standards, poles, fire hydrants, etc., are within the limits of the sidewalk area, the concrete around such structures shall be scored in a block <u>eight</u> inches wider than the maximum dimension of the structure at the sidewalk elevation. Prior to placing the concrete around such structure, a premolded expansion joint shall be placed around the structure the full depth of the concrete.
14) Finish concrete walks and driveways as specified in Section 404.19 of the VDOT Specifications.
15) Pedestrian traffic shall not be permitted to use the sidewalk for at least <u>three</u> days after the placing of the concrete. Vehicles shall not be permitted on the concrete until it has been in place for at least <u>ten</u> days, unless high early strength concrete is used.
16) Handicap ramps shall be installed in accordance with VDOT CG-12 curb ramp Specifications. Flares of the CG-12 curb ramps will have a standard broom finish.

b) Curb and Gutters

1) The subgrade shall be constructed to the required elevation below the finished surface of the gutter in accordance with dimensions and design as shown on VDOT Standards. Remove all soft and unsuitable material and replace with subbase material, which shall be compacted to 95% density in accordance with AASHTO-T-99 and finished to a smooth surface. Moisten the subbase prior to placing the concrete.
2) Forms shall be constructed of wood or metal conforming to VDOT Section 403.03.
3) Prior to placing concrete, check the line and grade for accuracy and fasten the face forms of the curb to the gutter forms. Spade the concrete and tamp sufficiently to bring the mortar to the surface, after which finish with a magnesium float. Construction shall be in sections of uniform lengths, providing transverse joints at approximately 10-feet intervals

and when the time elapsing between placements exceeds 45 minutes. No section shall be less than 6 feet in length. Separate sections by plate steel templates set perpendicular to the grade and center line of the unit specified. The templates shall be 1/8 inch in thickness and shall have a width and depth equal to the unit cross-section. Leave these templates in place until the concrete has set sufficiently to hold its shape.

4) Form expansion joints at intervals of 100 feet or less. When the curb and gutter is constructed adjacent to rigid pavements, the location and width of expansion joints shall coincide with those in the pavement, where practicable. Where stationary structures, such as catch basins and drop inlets, are within the limits of the curb and gutter, place an expansion joint between the structure and the curb and gutter. Place expansion joints at all returns.
5) Screed the face and top of curb and surface of gutter smooth and round the edges to a radius as shown on the VDOT Standards.
6) As soon as the concrete has attained sufficient set, remove the face forms of the curb. The exposed surfaces shall be screeded with a straight edge and finished with a steel trowel. Remove all trowel marks with a brush wet with clear water. Do not use mortar in finishing.
7) The finished surface of curb and gutter shall be true to line and grade with an allowable tolerance as specified in Section 316.05 of the VDOT Specifications.
8) After the concrete has set in conformance with Section 4, fill the spaces on both sides of the gutter or the back side of curb to the required elevation with suitable material and compact to 95% density in layers of not more than 6-inches.
9) The Contractor is responsible for the replacement of any pavement that is damaged and/or removed due to placement of curb and gutter. All patches shall be saw cut and patched according to the latest practices used in asphalt practices used in asphalt patching and as approved by the Department of Public Utilities - Engineering Division.

c) Construction of Forms

1) Construct wood forms of sound material, and of the correct shape and dimensions, constructed tightly and of sufficient strength. Brace and tie the forms together so that the movement of men, equipment, materials or placing and vibrating the concrete will not throw them out of line or position. Forms shall be strong enough to maintain their exact shape under all imposed loads.
2) Use form ties of sufficient strength and in sufficient quantities to prevent spreading of the forms. Place ties at least 1 inch away from the finished surface of the concrete.

e) Preparation for Placing

1) Remove water from excavations before concrete is deposited. Remove hardened concrete, debris, ice and other foreign materials from the interior of the forms and from the inner surfaces of mixing and conveying equipment. Do not place on frozen ground.
2) Prior to the placing of any concrete, notify the Department of Public Utilities - Engineering Division so that proper inspection may be made.

f) Delivery

1) Submit a delivery ticket indicating the date, time, ticket and load number, concrete class and design mix, quantity and location of placement. The delivery ticket shall be submitted to the Department of Public Utilities – Engineering Division.

g) Placing Concrete

1) Before placing concrete, remove all construction debris, water and ice from the places to be occupied by the concrete. Give particular attention to the removal of dirt and debris from all formed construction joints.
2) Concrete, when deposited, shall have a temperature ranging between a minimum of 50 degrees Fahrenheit (F) and a maximum of 90 degrees F. When the temperature of the

surrounding air is below 50 degrees or above 90 degrees F, concreting shall be done in accordance with the recommendations noted in ACI-306 and ACI-305 respectively.

3) Mix concrete in such quantities as required for immediate use and place prior to loss of slump.
4) Spade, work and vibrate concrete as it is being poured, to secure its maximum density, free from voids and completely filling the forms.

h) Removal of Forms

1) After concrete has been placed, all forms, bracing and supports shall remain undisturbed long enough to allow the concrete to reach the strength necessary to support with safety its own weight plus any live load or pressure that might be placed upon it without causing excessive settlement or deflective or any temporary or permanent damage to the structure. Prevent the breaking of edges and corners of concrete in the stripping of forms. Upon removal of formwork, immediately patch any honeycombed areas and other voids to the satisfaction of the Department of Public Utilities – Engineering Division.
2) Thoroughly clean forms before each reuse.

i) Protection of New Work

1) Protect all freshly placed concrete from mechanical injury or action of the elements until such time as the concrete is thoroughly set.

j) Preformed Joints

1) Furnish and install preformed expansion joint material at appropriate locations as described in Sections 1 and 2 of the Contract Documents.
2) Tool the concrete edges at expansion or contraction joints to a 1/8-inch radius.

k) Finishing

1) After screeding and floating, give concrete slabs a light steel toweling to seal the surface and remove any irregularities left by the float. Just before the concrete becomes non-plastic, the surface of the concrete shall be given a fine broom finish perpendicular to the line of traffic and so executed that the corrugations thus produced will be uniform in character and width. The broomed surface shall be free from porous spots, irregularities, depressions, and small pockets rough spots such as may be caused by accidentally disturbing particles of coarse aggregate embedded near the surface.

l) Curing

1) Curing shall be started as soon as it is possible to apply the curing medium without damaging the surface, preferably immediately upon completion of the finishing operation. At no time during the curing period shall the temperature of the concrete be permitted to drop below 40 degrees F.

m) Sealing

1) Concrete must be allowed to cure for a minimum of 28 days before applying sealer.
2) Contractor shall follow manufacturer's instructions for application and coverage.

n) Defective Concrete

1) Defective concrete is defined as concrete in place which does not conform to strength, shapes, alignment, appearance and/or elevations as required; areas which contain faulty surface areas and/or concrete surfaces not finished in accordance with these specifications.
2) Remove all defective concrete and replace in a manner meeting with the approval of the Department of Public Utilities – Engineering Division.

o) Manhole Collars

1) Contractor shall saw-cut per the following standard detail and excavate a minimum of 10" to expose the manhole frame and cover.
2) Riser rings shall be placed as needed to bring the manhole cover to the grade of the newly paved street.
3) Excavation area shall be filled with concrete, coated with color hardener and protected from traffic for a minimum of 24 hours.

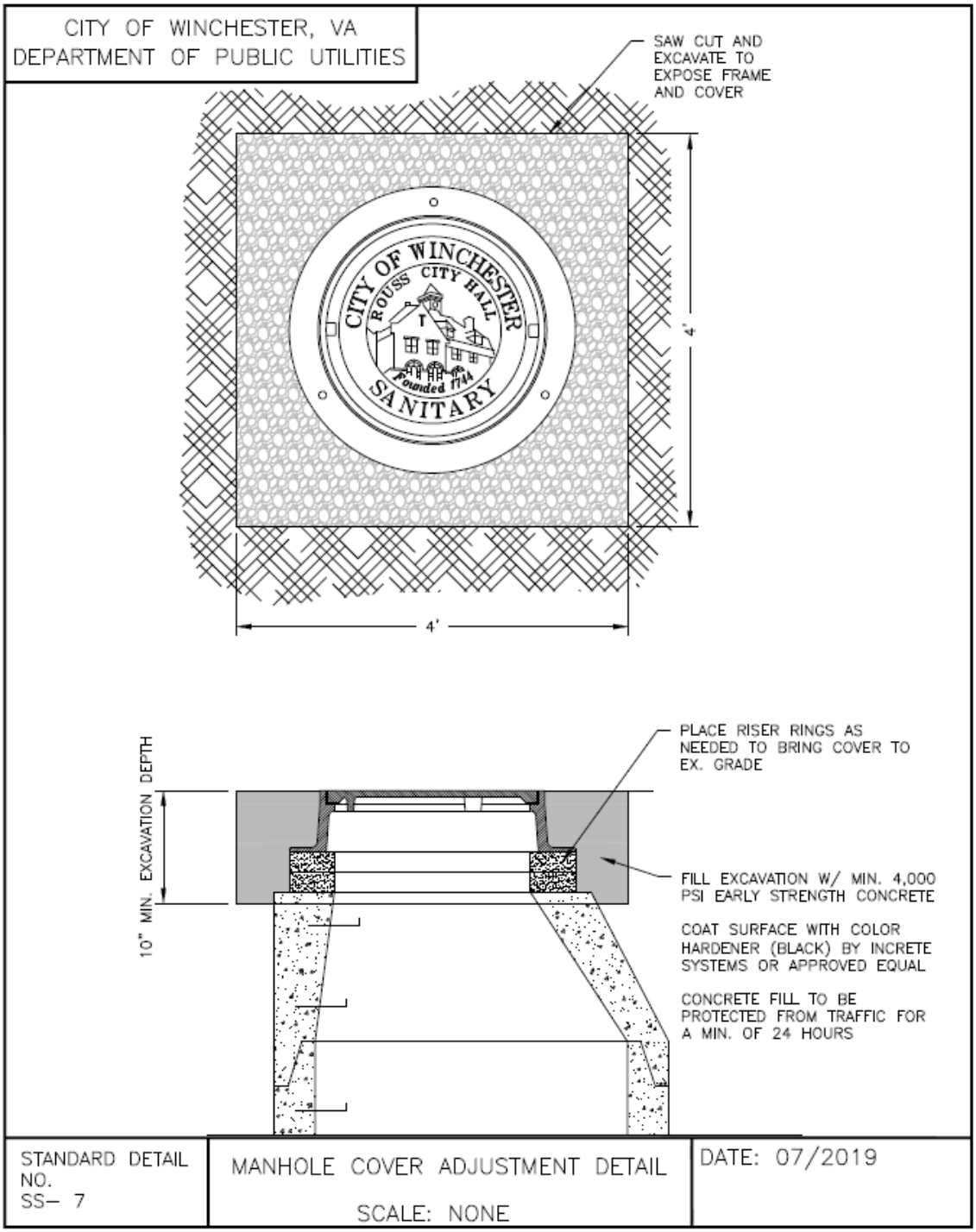

CITY OF WINCHESTER, VA
DEPARTMENT OF PUBLIC UTILITIES

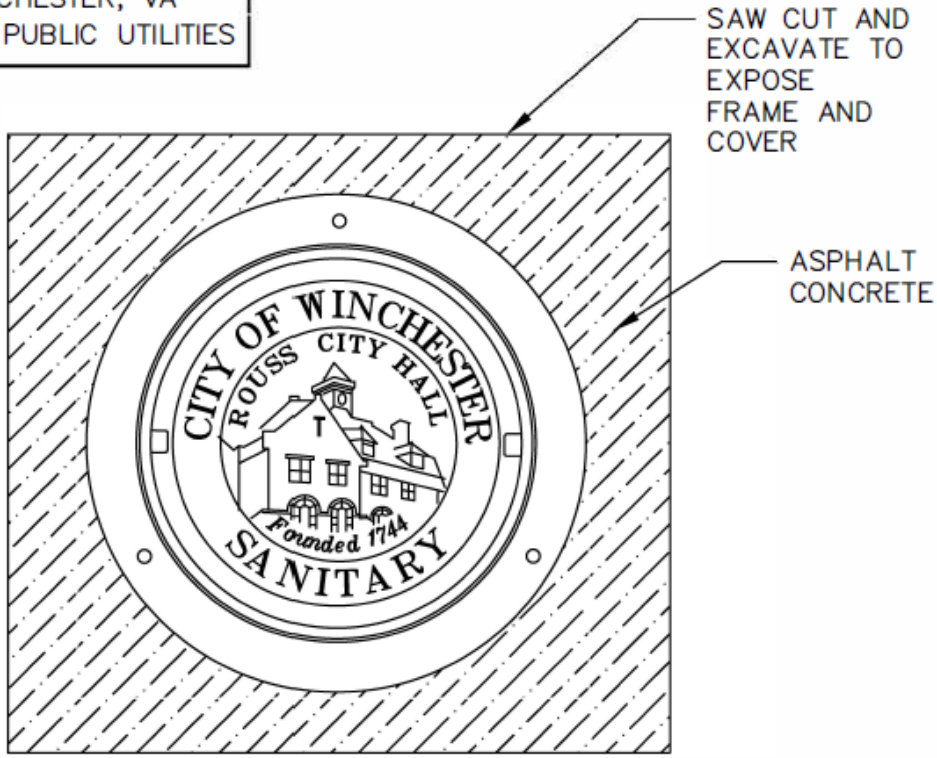

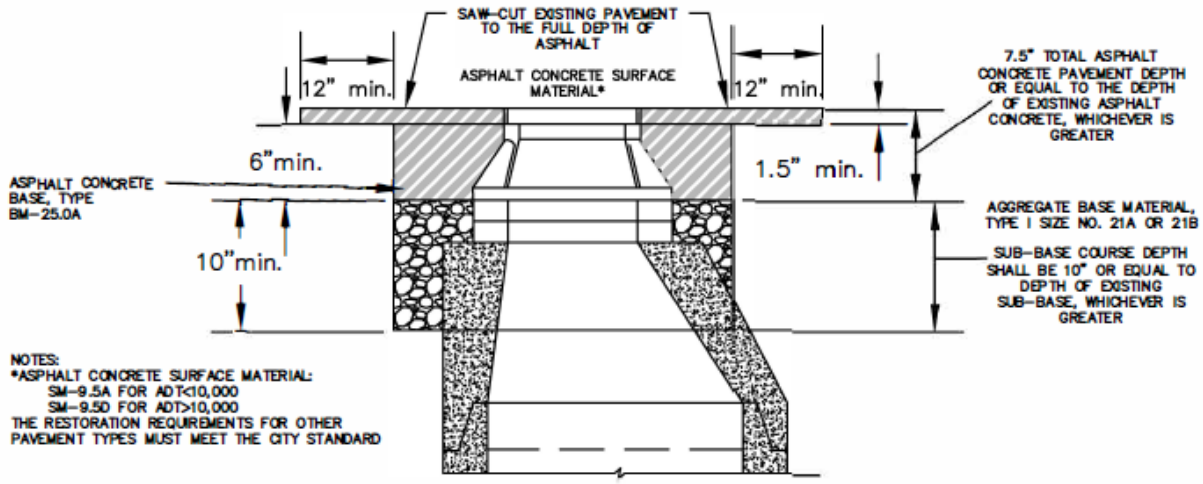

NOTES:
*ASPHALT CONCRETE SURFACE MATERIAL:
SM-9.5A FOR ADT<10,000
SM-9.5D FOR ADT>10,000
THE RESTORATION REQUIREMENTS FOR OTHER PAVEMENT TYPES MUST MEET THE CITY STANDARD

STANDARD DETAIL NO. SS-7A	VDOT RIGHT-OF-WAY MANHOLE COVER STANDARD DETAIL SCALE: NONE	DATE: 12/2018

IV. Measurement and Payment.

"Standard Curb, CG-2" will be measured in linear feet and will be paid for at the contract unit price per linear foot. Measurement shall be along the face of curb. This price shall include all equipment, labor and materials for installing the curb, aggregate base course, excavating, backfilling, compacting, disposing of surplus and unsuitable materials, existing site restoration (including but not limited to asphalt and concrete) and any other item required for a complete installation.

"Combination Curb & Gutter, CG-6" will be measured in linear feet and will be paid for at the contract unit price per linear foot. Measurement shall be along the flow-line of the gutter. This price shall include all equipment, labor and materials for installing the curb & gutter, aggregate base course, excavating, backfilling, compacting, disposing of surplus and unsuitable materials, existing site restoration (including but not limited to asphalt and concrete) and any other item required for a complete installation.

"Concrete Sidewalk, 4" Thick" will be measured in square yards of finished surface, complete-in-place, and will paid for at the contract unit price per square yard. The unit price shall include all equipment, labor and materials for the installation of the sidewalk, excavation and disposal of existing material (soil, grass, or gravel), backfill, aggregate base course, existing site restoration and any other item required for a complete installation.

"Brick Paver Sidewalks on 4" Concrete Base" will be measured in square yards of finished surface, complete-in-place, and will paid for at the contract unit price per square yard. The unit price shall include all equipment, labor and materials for the installation of the sidewalk, excavation and disposal of existing material (soil, grass, or gravel), backfill, aggregate base course, existing site restoration and any other item required for a complete installation.

"Raise Manhole Frame & Cover and Install Concrete Collar around Manholes (Street Type)" will be measured and paid for at the contract unit price for each manhole frame and cover raised and concrete collar installed. The unit price shall include all equipment, labor and materials for raising the existing collar or installing a new City-provided frame and cover, saw-cutting, excavation of existing manhole frame and cover and asphalt around the frame and cover, leveling rings, concrete, color hardener, protection of work, traffic control, and any other item required for a complete installation.

Payment will be made under:

Pay Item	**Pay Unit**
Standard Curb, CG-2	LF
Combination Curb & Gutter, CG-6	LF
Concrete Sidewalk, 4" Thick	SY
Brick Paver Sidewalk on 4" Concrete Base	SY
Raise Manhole Frame & Cover and Install Concrete Collar around Manholes (Street Type)	EA