CITY OF WINCHESTER
DEPARTMENT OF PUBLIC SERVICES

PENNSYLVANIA AVENUE AND CONWAY WASTEWATER PUMP STATIONS REPLACEMENT

INVITATION TO BID # 202004

FEBRUARY 2020

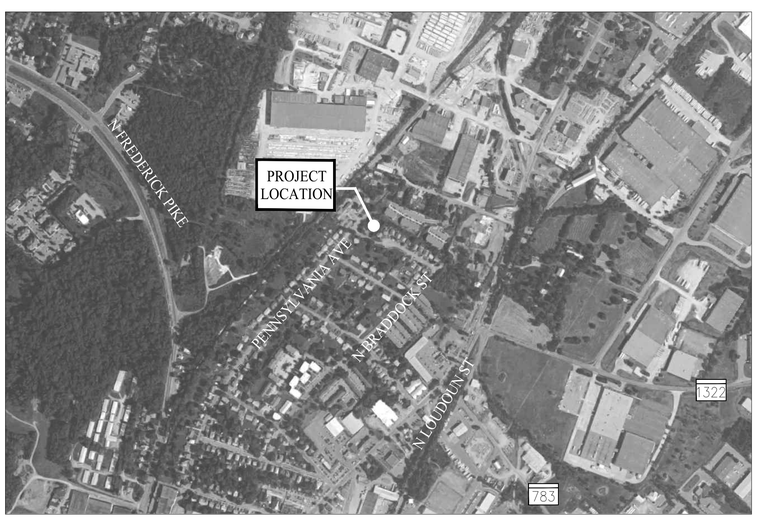

PENNSYLVANIA AVENUE LOCATION MAP

NTS

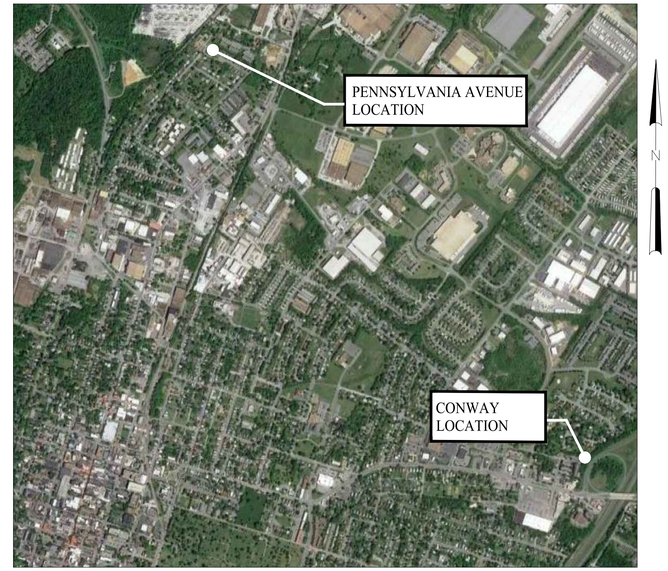

OVERALL LOCATION MAP

NTS

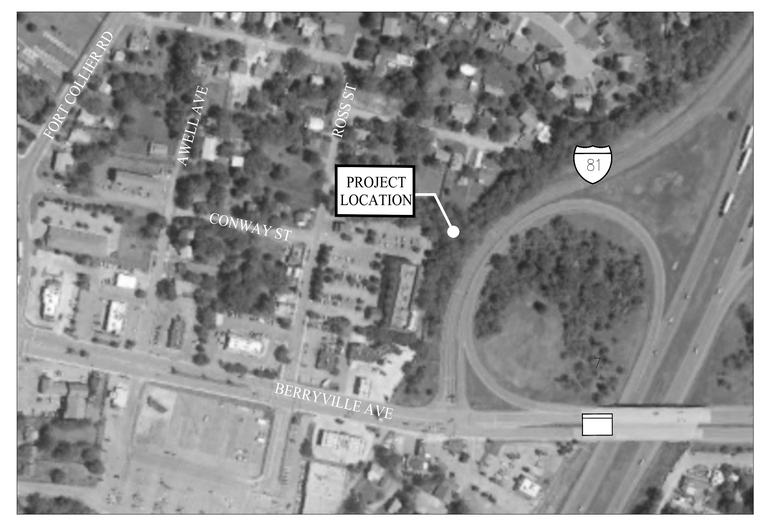

CONWAY LOCATION MAP

NTS

OWNER:

CITY OF WINCHESTER
DEPARTMENT OF PUBLIC SERVICES
ROUSS CITY HALL
15 NORTH CAMERON STREET
WINCHESTER, VA 22601

COMMONWEALTH OF VIRGINIA
CHRISTOPHER W. TABOR
Lic. No.033020
02-04-2020
PROFESSIONAL ENGINEER

COMMONWEALTH OF VIRGINIA
AGATA M. [illegible]
Lic. No.36934
02-04-2020
PROFESSIONAL ENGINEER

Hazen

HAZEN AND SAWYER
4035 RIDGE TOP ROAD, SUITE 400
FAIRFAX, VA 22030

CONSTRUCTION SET

GENERAL NOTES AND CONSTRAINTS

GENERAL NOTES:

1. ALL MATERIALS CONSTRUCTION METHODS, AND WORKMANSHIP SHALL CONFORM WITH THE LATEST VERSION OF THE FOLLOWING STANDARDS:FREDERICK COUNTY CODE, ARTICLE V DESIGN STANDARDS VIRGINIA EROSION AND SEDIMENT CONTROL HANDBOOK CITY OF WINCHESTER PUBLIC SERVICES STANDARDS MANUAL.
2. ALL WORK SHALL BE LIMITED TO THE CITY OF WINCHESTER PROPERTY AND EASEMENT.
3. CONTRACTOR SHALL VERIFY FIELD CONDITIONS BEFORE COMMENCEMENT OF ANY CONSTRUCTION ACTIVITIES. CONTRACTOR SHALL VERIFY EXISTING ELEVATIONS AND DIMENSIONS WHERE NEW WORK WILL MATCH EXISTING. DISCREPANCIES SHALL BE BROUGHT TO THE ATTENTION OF THE ENGINEER FOR RESOLUTION PRIOR TO THE COMMENCEMENT OF WORK.
4. CONTRACTOR SHALL OBTAIN ALL THE NECESSARY PERMITS FROM THE APPROPRIATE AUTHORITIES, DEPARTMENTS, AND/OR AGENCIES HAVING JURISDICTION PRIOR TO COMMENCING WORK.
5. CONTRACTOR SHALL DETERMINE EXACT LOCATION OF EXISTING UTILITIES AND PROTECT THE EXISTING UTILITIES DURING CONSTRUCTION WORK.
6. WORK SHALL BE PERFORMED IN ACCORDANCE WITH CITY OF WINCHESTER STANDARDS AND AS DIRECTED BY THE OWNER.
7. UTILITIES HAVE BEEN PLOTTED FROM AVAILABLE SURVEY INFORMATION. IT IS THE CONTRACTOR'S RESPONSIBILITY TO VERIFY THEIR EXACT LOCATION AND TO AVOID DAMAGE TO THEM. THE CONTRACTOR SHALL CONTACT VIRGINIA 811 AT PHONE NUMBER 811 OR 1-800-552-7001 TO REQUEST UNDERGROUND UTILITY LOCATION MARK-OUT AT LEAST THREE (3) WORKING DAYS BUT NO MORE THAN TEN (10) WORKING DAYS PRIOR TO BEGINNING EXCAVATION, INCLUDING SOIL DRILLING. THE CONTRACTOR SHALL ALSO CONTACT AND REQUEST UTILITY LOCATION MARK-OUT FROM BURIED UTILITY OWNERS WITH UTILITIES ON THE PROJECT SITE THAT ARE NOT PARTICIPANTS OF VIRGINIA 811.
8. CONTRACTOR SHALL MAKE EVERY EFFORT TO SAVE AND MAINTAIN ALL PROPERTY IRONS, MONUMENTS, AND OTHER PERMANENT POINTS AND LINES OF REFERENCE AND CONSTRUCTION STAKES. A LAND SURVEYOR REGISTERED IN THE COMMONWEALTH OF VIRGINIA SHALL, AT THE CONTRACTOR'S EXPENSES, REPLACE ANY PROPERTY IRONS, MONUMENTS, AND OTHER PERMANENT POINTS AND LINES OF REFERENCE DISTURBED BY CONSTRUCTION.
9. PROVIDE PIPE SUPPORTS PER SECTION 15020.
10. CONTRACTOR SHALL REMOVE, AND DISPOSE OF ALL DEBRIS GENERATED DURING THE PROJECT OFF SITE AT A PROPERTY PERMITTED DISPOSAL SITE.
11. THE CONTRACTOR IS SOLELY RESPONSIBLE FOR ANY SEWAGE SPILLS. IN THE EVENT OF A SPILL THE CONTRACTOR SHALL CONTACT DEQ AND CITY OF WINCHESTER WITHIN 2 HOURS AND FOLLOW ALL DEQ PROCEDURES.
12. THE CONTRACTOR IS RESPONSIBLE FOR MAINTAINING CLEAN AND CLEAR ROADS ADJACENT TO THE PROJECT AREA. CONTRACTOR SHALL CLEAN ROADS WHEN DIRECTED BY THE OWNER.
13. CONTRACTOR SHALL PROVIDE TRAFFIC CONTROL AS REQUIRED BY THE VDOT VIRGINIA WORK AREA PROTECTION MANUAL, STANDARDS AND GUIDE LINES FOR TEMPORARY TRAFFIC CONTROL.
14. CONTRACTOR SHALL RESTORE ALL DISTURBED GRASS AREAS TO PREEXISTING CONDITIONS TO THE SATISFACTION OF THE OWNER.
15. FOR SUGGESTED SEQUENCES OF CONSTRUCTION AND SITE SPECIFIC CONSTRAINTS REFER TO SPECIFICATION SECTION 01520.
16. CONTRACTOR SHALL TAKE CARE TO AVOID DAMAGE TO EXISTING PAVEMENT, TREES, VEGETATION, STRUCTURES, AND UTILITIES THAT ARE NOT INDICATED TO BE DEMOLISHED OR REMOVED. ANY DAMAGE TO EXISTING PAVEMENT, TREES, VEGETATION, STRUCTURES, AND UTILITIES NOT INDICATED TO BE DEMOLISHED OR REMOVED SHALL BE REPAIRED AT THE CONTRACTOR'S EXPENSE.
17. WHERE PROPOSED WORK IS IN THE VICINITY OF UTILITY POLES, SUCH THAT SUPPORT OF THE POLE(S) WILL BE REQUIRED, THE CONTRACTOR SHALL BE RESPONSIBLE FOR NOTIFYING THE UTILITY OF THE WORK. IT WILL BE THE RESPONSIBILITY OF THE CONTRACTOR TO COORDINATE WITH THE UTILITY FOR SUPPORT OF THE POLE.
18. WHERE OVERHEAD POWER LINES ARE PRESENT, CONTRACTOR MUST CONTACT THE UTILITY PRIOR TO CONSTRUCTION ACTIVITIES TO DETERMINE THE MINIMUM REQUIRED EQUIPMENT CLEARANCE (MEC) DISTANCE BASED UPON LINE STRENGTH.
19. GROUNDWATER FROM ALL DE-WATERING OPERATIONS SHALL BE DISCHARGED TO AN ENVIRONMENTALLY ACCEPTABLE LOCATION IN ACCORDANCE WITH THE CONTRACT DOCUMENTS, OR AS DIRECTED BY THE ENGINEER.
20. WORK SHALL BE IN ACCORDANCE WITH SECTION 01520, MAINTENANCE OF UTILITY OPERATIONS DURING CONSTRUCTION.
21. THE CONTRACTOR IS RESPONSIBLE FOR OBTAINING FUEL TANK PERMIT, INSPECTIONS AND PROVIDING SPILL PREVENTION CONTROL AND COUNTER MEASURE (SPCC) PLAN. THE CONTRACTOR SHALL COORDINATE WITH DEQ, FIRE MARSHAL AND OWNER.

ABBREVIATIONS

GENERAL

AC	ASBESTOS CEMENT
ADH	ADHESIVE
ADJ	ADJUSTABLE
AFF	ABOVE FINISHED FLOOR
AL, ALUM	ALUMINUM
ALLOW	ALLOWANCE/ALLOWABLE
ALT	ALTERNATE
APPROX	APPROXIMATE
ARCH	ARCHITECTURAL
ASPH	ASPHALT
B	BORING
BFE	BOTTOM OF FITTING ELEV
B	BASELINE
BL	BUILDING LINE
BLDG	BUILDING
BLK	BLOCK
BM	BENCH MARK
BOC	BACK OF CURB
BOM	BOTTOM OF MASONRY
BOT	BOTTOM
BRG	BEARING
CB	CATCH BASIN
CE	CONSTRUCTION EASEMENT
CF	CUBIC FEET
CFM	CUBIC FEET PER MINUTE
CL	CENTERLINE
CLR	CLEAR
CO	CLEANOUT
COL	COLUMN
CONC	CONCRETE
CONST	CONSTRUCTION
CONT	CONTINUOUS, CONTINUATION
CONTR	CONTRACTOR
CORP	CORPORATION
CP	CONTROL PANEL
CRS	COURSE
CST	CHEMICAL STORAGE TANK
CT	CERAMIC TILE
CTJ	CONTROL JOINT
CU	COPPER
CY	CUBIC YARD
DET	DETAIL
DIA OR Ø	DIAMETER
DIAG	DIAGONAL
DIM	DIMENSION
DISC	DISCONNECT
DISCH	DISCHARGE
DIST	DISTRIBUTION
DL	DEAD LOAD
DN	DOWN
DOZ	DOZEN
DP	DISTRIBUTION PANEL
D/S	DOWNSTREAM
DT	DAY TANK
DWG(S)	DRAWING(S)
DWL	DOWEL
EA	EACH
ECC	ECCENTRIC
ED	EQUIPMENT DRAIN
EE	EACH END
EF	EACH FACE OR EXHAUST FAN
EFF	EFFLUENT
EL	ELEVATION
ELEC	ELECTRICAL
EMH	ELECTRICAL MANHOLE
ENGR	ENGINEER
ENT	ENTRANCE
EOG	EDGE OF GRAVEL
EOP	EDGE OF PAVEMENT
EPX	EPOXY
EQ	EQUAL
EQPT	EQUIPMENT
ET	EXPANSION TANK
EUH	ELECTRIC UNIT HEATER
EW	EACH WAY
EXIST/EX	EXISTING
EXH	EXHAUST
EXP	EXPANSION
EXT	EXTERIOR
FF	FINISH FLOOR
FH	FIRE HYDRANT
FIG	FIGURE
FIN	FINISH
FIX	FIXTURE
FL	FLOOR
FLG	FLANGE
FT	FEET
FTG	FOOTING
GA	GAUGE
GAL	GALLON
GC	GENERAL CONTRACTOR
GEN	GENERATOR
GPM	GALLONS PER MINUTE
GR	GRADE
GW	GUY WIRE
HC	HEATING COIL
HDW	HARDWARE
HORIZ	HORIZONTAL
HP	HORSEPOWER OR HEAT PUMP
HPT	HIGH POINT
HVAC	HEATING, VENTILATION AND AIR CONDITIONING
HWY	HIGHWAY
HYD	HYDRAULIC
I	IRON
ID	INSIDE DIAMETER
IF	INSIDE FACE
IN	INCH
INCL	INCLUDED
INT	INTERIOR
INV	INVERT
J	JOIST
JB	JUNCTION BOX
JCT	JUNCTION
JT	JOINT
L	LENGTH/ANGLE
LB	POUND OR LINE BACK
LF	LINEAR FEET
LG	LONG
LPT	LOW POINT
MAINT	MAINTENANCE
MANUF	MANUFACTURER
MATL	MATERIAL
MAX	MAXIMUM
MECH	MECHANICAL
MET	METAL
MFR	MANUFACTURER
MG	MILLION GALLONS
MGD	MILLION GALLONS PER DAY
MH	MANHOLE
MIN	MINIMUM
MISC	MISCELLANEOUS
MO	MASONRY OPENING
MOD	MODIFY OR MODIFIED
MTD	MOUNTED
MTG	MOUNTING
MULT	MULTIPLE
N	NORTH
NA	NOT APPLICABLE
NAD '83	NORTH AMERICAN DATUM OF 1983
NAVD '88	NORTH AMERICAN VERTICAL DATUM OF 1988
NC	NORMALLY CLOSED
NF	NEAR FACE
NGVD '29	NATIONAL GEODETIC VERTICAL DATUM OF 1929
NIC	NOT IN CONTRACT
No.	NUMBER
NO	NORMALLY OPEN
NTS	NOT TO SCALE
OC	ON CENTER
OD	OUTSIDE DIAMETER OR OVERHEAD DOOR
OF	OUTSIDE FACE
OHE	OVERHEAD ELECTRIC
OPNG	OPENING
OPP	OPPOSITE
ORIG	ORIGINAL
PAR	PARALLEL
PC	POINT OF CURVE OR PIECE OR PERSONAL COMPUTER
PCC	POINT OF COMPOUND CURVE
PCF	POUNDS PER CUBIC FOOT
PERP	PERPENDICULAR
PI	POINT OF INTERSECTION
PL	PROPERTY LINE OR PLATE
PNL	PANEL
PP	POWER PANEL OR POWER POLE
PREFAB	PREFABRICATED
PROP	PROPOSED
PSF	POUNDS PER SQUARE FOOT
PSI	POUNDS PER SQUARE INCH
PT	POINT OF TANGENT/POINT
PVMT	PAVEMENT
QTY	QUANTITY
RAD	RADIUS
RECIR	RECIRCULATION
RECT	RECTANGULAR
REF	REFERENCE
REINF	REINFORCING
REM	REMOVE
REQD	REQUIRED
REST	RESTRAINED
REV	REVISE
RJ	RESTRAINED JOINT
RM	ROOM
RND	ROUND
RO	ROUGH OPENING
RT	RIGHT
R/W OR ROW	RIGHT OF WAY
S	SOUTH OR SLOPE
SB	SOIL BORING
SBL	SURVEY BASELINE
SCH	SCHEDULE
SECT	SECTION
SERV	SERVICE
SF	SQUARE FEET
SHT	SHEET
SI	SQUARE INCH
SIM	SIMILAR
SMH	STORM MANHOLE
SP	SUMP PUMP
SPEC	SPECIFICATION
SQ	SQUARE
SSP	SUBMERSIBLE SUMP PUMP
SST	STAINLESS STEEL
STA	STATION OR STACK
STD	STANDARD
STG	STORAGE OR STOP GATE (LOG)
STL	STEEL
STRU	STRUCTURAL
SUB	SUBSTITUTE
SUCT	SUCTION
SUR	SURFACE
SUSP	SUSPENDED
TBA	TO BE ABANDONED
TECH	TECHNICAL
TEMP	TEMPERATURE
THK	THICK
THRU	THROUGH
TOC	TOP OF CONCRETE
TOM	TOP OF MASONRY/MANHOLE
TOS	TOP OF SLAB/ TOP OF STEEL
TOL	TOLERANCE
TYP	TYPICAL
UG	UNDERGROUND
UGE	UNDERGROUND ELECTRIC
UGG	UNDERGROUND GAS
UNFIN	UNFINISHED
UNO	UNLESS NOTED OTHERWISE
UPS	UNINTERRUPTIBLE POWER SUPPLY
UTIL	UTILITY
VEL	VELOCITY
VERT	VERTICAL
VOL	VOLUME
W/	WITH
W/O	WITHOUT
WP	WATERPROOF
WPFG	WATER PROOFING
WT	WEIGHT
WTP	WATER TREATMENT PLANT
WV	WATER VALVE
XFMR	TRANSFORMER
XMH	EXISTING MANHOLE
YD	YARD
YR	YEAR

VALVES, FITTINGS, ETC.

BF	BLIND FLANGE
BV	BALL VALVE
CV	CHECK VALVE
CPLG	COUPLING
FLEX	FLEXIBLE
FLG	FLANGE
FTG	FITTING
GV	GATE VALVE
PV	PLUG VALVE

PROCESS PIPING

W	WATER LINE
FM	FORCE MAIN

LEGEND

DRAWINGS ARE CROSS REFERENCED IN THE FOLLOWING METHOD:

(A) A SECTION CUT ON DRAWING A3 IS IDENTIFIED AS FOLLOWS:

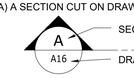

(B) THE SECTION SHOWN ON DRAWING A16 IS IDENTIFIED AS FOLLOWS:

DETAILS ARE CROSS REFERENCED IN A SIMILAR MANNER, EXCEPT DETAILS ARE IDENTIFIED BY A SQUARE WITH A NUMBER IN THE UPPER HALF.

STANDARD DETAILS ARE REFERENCED BY A UNIQUE SEVEN DIGIT NUMBER AND ARE SHOWN ON THE CONTRACT DRAWINGS BY ONE OF TWO METHODS:

1509203 → REFERENCED ITEM

OR:

SEE 1509203 → REFERENCED ITEM

STANDARD DETAILS ARE COMPILED IN APPROXIMATE NUMERICAL ORDER IN THE BACK OF THE CONTRACT DRAWINGS ON THE D* DRAWINGS.

MATERIALS

- ASPHALT RESURFACING PAVING
- ASPHALT PAVING OVER TRENCH
- CHECKERED PLATE
- CONCRETE
- CONC FILL OR GROUT
- GRADE OR EARTH
- GRAVEL
- GRATING
- ROCK

SYMBOLS

- GATE VALVE
- BUTTERFLY VALVE
- PLUG VALVE
- SWING CHECK VALVE
- GLOBE VALVE
- PINCH VALVE
- DIAPHRAGM VALVE
- BALL VALVE
- BALL CHECK VALVE
- HARNESSED FLANGED ADAPTER
- HARNESSED SLEEVE TYPE COUPLING
- SLEEVE TYPE COUPLING
- HARNESSED FLEXIBLE COUPLING
- CE — CONSTRUCTION ENTRANCE
- SF — SILT FENCE
- WALL PENETRATION
- MECHANICAL COUPLING
- WELDED JOINT
- FLANGED JOINT
- MECHANICAL, PUSH ON OR RESTRAINED JOINT
- SLUICE GATE
- SLIDE GATE/STOP GATE
- FLUSHING CONNECTION
- HOSE BIBB
- QUICK DISCONNECT FITTING
- YARD HYDRANT
- FIRE HYDRANT
- SOIL BORING
- TS — TEMPORARY SEEDING
- PS — PERMANENT SEEDING

LINETYPES

- PROPOSED ITEMS
- EXISTING ITEMS
- HIDDEN ITEMS
- DEMOLITION ITEMS
- PROPERTY LINE
- EASEMENT
- X — X — FENCE LINE
- W — W — POTABLE WATER
- CENTER LINE
- MATCH LINE
- EXISTING PAVEMENT
- FM — FORCE MAIN
- S — SANITARY SEWER
- UGE — UNDERGROUND ELECTRIC
- TREELINE
- LOD — LIMITS OF DISTURBANCE

INDEX OF DRAWINGS

DWG NO.	TITLE
GENERAL	
G1	COVER SHEET
G2	INDEX, ABBREVIATIONS, LEGEND, AND NOTES
C1	CIVIL AND EROSION AND SEDIMENT CONTROL NOTES
C2	EROSION AND SEDIMENT CONTROL NOTES
S1	STRUCTURAL NOTES
E1	SYMBOLS AND ABBREVIATIONS
E2	HAZARDOUS AREA LIMITS AND NOTES
E3	ELEMENTARY DRAWINGS 1
E4	ELEMENTARY DRAWINGS 2
H1	HVAC SYMBOLS, ABBREVIATIONS, NOTES AND SCHEDULES
I1	SYMBOLS AND LEGEND
PENNSYLVANIA AVENUE WASTEWATER PUMP STATION	
C1-P	EXITING CONDITIONS
C2-P	DEMOLITION AND EROSION CONTROL
C3-P	PROPOSED SITE CONDITIONS
C4-P	PROPOSED SITE PLAN AND PROFILE I
C5-P	PROPOSED SITE PLAN AND PROFILES II
M1-P	WWPS PLANS AND SECTIONS
S1-P	ELECTRICAL BLDG PLANS AND SECTION
A1-P	ELECTRICAL BUILDING PLANS AND ELEVATIONS
E1-P	ONE-LINE DIAGRAM, CABLE SCHEDULES, ELEMENTARY DIAGRAM
E2-P	PARTIAL SITE PLAN
E3-P	ELECTRICAL BUILDING PLAN AND SECTION
I1-P	PROCESS AND INSTRUMENTATION DIAGRAM
CONWAY STREET WASTEWATER PUMP STATION	
C1-C	EXISTING SITE CONDITIONS
C2-C	DEMOLITION AND EROSION AND SEDIMENT CONTROL
C3-C	PROPOSED SITE CONDITIONS
C4-C	ENLARGED SITE AND STAKING PLAN
C5-C	PROFILES - SHEET 1
M1-C	WWPS PLANS AND SECTIONS
A1-C	ELECTRICAL BUILDING PLANS AND ELEVATIONS
E1-C	ONE-LINE DIAGRAM, CABLE SCHEDULES, ELEMENTARY DIAGRAM
E2-C	PARTIAL SITE PLAN
E3-C	ELECTRICAL BUILDING PLAN AND SECTION
I1-C	PROCESS AND INSTRUMENTATION DIAGRAM
DETAILS	
D1	STANDARD DETAILS
D2	STANDARD DETAILS
D3	STANDARD DETAILS
D4	STANDARD DETAILS
D5	STANDARD DETAILS
D6	STANDARD DETAILS

REV	ISSUED FOR	DATE	BY
	PERMITTING SUBMITTAL	10/2019	AMF

PROJECT ENGINEER:	A. FALLON
DESIGNED BY:	N. McDERMOTT
DRAWN BY:	P. VANGORDEN
CHECKED BY:	J. PETERY

IF THIS BAR DOES NOT MEASURE 1" THEN DRAWING IS NOT TO FULL SCALE (0 — 1/2" — 1")

CONSTRUCTION SET

COMMONWEALTH OF VIRGINIA — AGATA M. FALLON — Lic. No.36934 — 02-04-2020 — PROFESSIONAL ENGINEER

Hazen

HAZEN AND SAWYER
4035 RIDGE TOP ROAD, SUITE 400
FAIRFAX, VA 22030

CITY OF WINCHESTER
WINCHESTER, VIRGINIA

PENNSYLVANIA AVENUE AND CONWAY WASTEWATER PUMP STATIONS REPLACEMENT

GENERAL

INDEX, ABBREVIATIONS, LEGEND AND NOTES

DATE: FEBRUARY 2020
HAZEN NO.: 31294-007/014
CONTRACT NO.:
DRAWING NUMBER: G2

PLOT DATE: 2020/02/03 1:03:42 PM BY: ADARNELL Save Date: 2020/02/03 12:49 PM Saved By: ADARNELL
File: G:\31294-RC\31294-014\ENGINEERING\CIVIL\GEN\G-2

GENERAL NOTES:

1. CONTRACTOR SHALL TAKE CARE TO AVOID DAMAGE TO EXISTING PAVEMENT, TREES, VEGETATION, STRUCTURES, AND UTILITIES THAT ARE NOT INDICATED TO BE DEMOLISHED OR REMOVED. ANY DAMAGE TO EXISTING PAVEMENT, TREES, VEGETATION, STRUCTURES, AND UTILITIES NOT INDICATED TO BE DEMOLISHED OR REMOVED SHALL BE REPAIRED AT THE CONTRACTOR'S EXPENSE.

2. UTILITIES HAVE BEEN PLOTTED FROM AVAILABLE SURVEY INFORMATION AND RECORD DATA. IT IS THE CONTRACTOR'S RESPONSIBILITY TO VERIFY THEIR EXACT LOCATION AND TO AVOID DAMAGE TO THEM. THE CONTRACTOR SHALL CONTACT VIRGINIA 811 AT PHONE NUMBER 811 OR 1-800-552-7001 TO REQUEST UNDERGROUND UTILITY LOCATION MARK-OUT AT LEAST THREE (3) WORKING DAYS BUT NO MORE THAN TEN (10) WORKING DAYS PRIOR TO BEGINNING EXCAVATION, INCLUDING SOIL DRILLING. THE CONTRACTOR SHALL ALSO CONTACT AND REQUEST UTILITY LOCATION MARK-OUT FROM BURIED UTILITY OWNERS WITH UTILITIES ON THE PROJECT SITE THAT ARE NOT PARTICIPANTS OF VIRGINIA 811.

3. WHERE PROPOSED WORK IS IN THE VICINITY OF UTILITY POLES, SUCH THAT SUPPORT OF THE POLE(S) WILL BE REQUIRED, THE CONTRACTOR SHALL BE RESPONSIBLE FOR NOTIFYING THE UTILITY OF THE WORK. IT WILL BE THE RESPONSIBILITY OF THE CONTRACTOR TO COORDINATE WITH THE UTILITY FOR SUPPORT OF THE POLE.

4. WHERE OVERHEAD POWER LINES ARE PRESENT, CONTRACTOR MUST CONTACT THE UTILITY PRIOR TO CONSTRUCTION ACTIVITIES TO DETERMINE THE MINIMUM REQUIRED EQUIPMENT CLEARANCE (MEC) DISTANCE BASED UPON LINE STRENGTH.

5. DURING EXCAVATION AND PLACEMENT OF UTILITIES THE CONTRACTOR SHALL COMPLY WITH ALL APPLICABLE SAFETY REGULATIONS AND SHALL SUBMIT TO THE ENGINEER FOR APPROVAL SHEET PILING, SHORING AND/OR BRACING DESIGNS PREPARED BY A PROFESSIONAL ENGINEER IN THE STATE OF VIRGINIA AS MAY BE NECESSARY TO COMPLY WITH THESE REGULATIONS.

6. GROUNDWATER FROM ALL DE-WATERING OPERATIONS SHALL BE DISCHARGED THROUGH A SEDIMENT FILTERING DEVICE TO AN ENVIRONMENTALLY ACCEPTABLE LOCATION IN ACCORDANCE WITH THE CONTRACT DOCUMENTS, OR AS DIRECTED BY THE ENGINEER.

7. ALL TEMPORARY FACILITIES ARE SUBJECT TO THE SAME HEALTH AND SAFETY REQUIREMENTS AS PERMANENT FACILITIES, AS SPECIFIED IN THE CONTRACT DOCUMENTS AND HEALTH SAFETY PLAN (HASP), IF PRESENT.

8. THE CONTRACTOR SHALL REMOVE AND DISPOSE OF ALL DEBRIS GENERATED DURING THE PROJECT OFF SITE AT A PROPERLY PERMITTED DISPOSAL FACILITY.

SEDIMENT AND EROSION CONTROL NOTES:

1. DUE TO THE NATURE OF THE WORK REQUIRED BY THIS CONTRACT, IT IS ANTICIPATED THE LOCATION AND NATURE OF EROSION AND SEDIMENT CONTROL MEASURES WILL BE ADJUSTED AS CONSTRUCTION PROGRESSES TO REFLECT THE CURRENT PHASE OF WORK. THE CONSTRUCTION SCHEDULE ADOPTED BY THE CONTRACTOR WILL IMPACT THE PLACEMENT AND NEED FOR SPECIFIC DEVICES REQUIRED FOR THE CONTROL OF EROSION. THE LOCATION AND EXTENT OF EROSION AND SEDIMENT CONTROL MEASURES SHALL BE REVISED AT EACH PHASE OF CONSTRUCTION RESULTING IN A CHANGE OF EITHER THE QUANTITY OR DIRECTION OF SURFACE RUNOFF FROM THE CONSTRUCTION AREAS. EROSION AND SEDIMENT CONTROL MEASURES SHALL REMAIN IN PLACE AT THE CONCLUSION OF THE PROJECT.
2. CONTRACTOR SHALL OBTAIN PRIOR APPROVAL FROM THE ENGINEER, OWNER, AND REGULATORY AGENCIES FOR DEVIATIONS FROM THE APPROVED EROSION AND SEDIMENT CONTROL PLAN.
3. NO LAND DISTURBANCE, DEMOLITION OR CONSTRUCTION ACTIVITIES SHALL BEGIN UNTIL ALL PERIMETER EROSION AND SEDIMENT CONTROL MEASURES, INCLUDING, BUT NOT LIMITED TO, SILT FENCING, INLET PROTECTION, TEMPORARY DIVERSIONS, AND CONSTRUCTION ENTRANCES HAVE BEEN INSTALLED AS SHOWN ON THE CONTRACT DRAWINGS. IF CLEARING IS REQUIRED FOR INSTALLATION OF A PARTICULAR MEASURE, ALL MEASURES NOT REQUIRING CLEARING SHALL BE INSTALLED FIRST. CLEARING OF THE NECESSARY LAND FOR INSTALLATION OF THE PARTICULAR MEASURE MAY THEN PROCEED.
4. CLEARING SHALL BE LIMITED AS MUCH AS POSSIBLE TO AREAS REQUIRED FOR CURRENT CONSTRUCTION ACTIVITIES. MASS CLEARING AND GRADING SHALL BE AVOIDED.
5. ALL EROSION CONTROL MEASURES SHALL BE INSPECTED WITHIN 24 HOURS FOLLOWING EVERY RAINFALL BUT IN NO CASE LESS THAN ONCE EVERY SEVEN CALENDAR DAYS.
6. EROSION AND SEDIMENT CONTROL MEASURES SHALL BE REPAIRED OR REPLACED IMMEDIATELY AS REQUIRED TO MAINTAIN PERFORMANCE OF MEASURE. MEASURES SHALL BE CLEANED WHEN SEDIMENT VOLUME REACHES ½ OF TOTAL VOLUME OF MEASURE. REMOVED SEDIMENT SHALL BE DISPOSED OF IN SUCH A MANNER AND LOCATION AS TO INSURE FURTHER SEDIMENT TRANSPORT DOES NOT OCCUR.
7. CONTRACTOR SHALL INITIATE STABILIZATION MEASURES AS SOON AS PRACTICABLE ON STOCKPILES AND IN PORTIONS OF THE SITE WHERE CONSTRUCTION ACTIVITIES HAVE TEMPORARILY OR PERMANENTLY CEASED, BUT IN NO CASE MORE THAN 7 DAYS AFTER THE CONSTRUCTION ACTIVITY IN THAT PORTION OF THE SITE HAS TEMPORARILY OR PERMANENTLY CEASED. THIS REQUIREMENT DOES NOT APPLY IN THE FOLLOWING INSTANCES:

   A) WHERE THE INITIATION OF STABILIZATION MEASURES BY THE 7TH DAY AFTER CONSTRUCTION ACTIVITY TEMPORARILY OR PERMANENTLY CEASED IS PRECLUDED BY SNOW COVER OR FROZEN GROUND CONDITIONS, STABILIZATION MEASURES SHALL BE INITIATED AS SOON AS PRACTICABLE;

   B) WHERE CONSTRUCTION ACTIVITY ON A PORTION OF THE SITE IS TEMPORARILY CEASED, AND EARTH-DISTURBING ACTIVITIES WILL BE RESUMED WITHIN FOURTEEN (14) DAYS, TEMPORARY STABILIZATION MEASURES NEED NOT BE INITIATED ON THAT PORTION OF THE SITE.

8. ALL DISTURBED AREAS SHALL DRAIN TO APPROVED SEDIMENT CONTROL MEASURES AT ALL TIMES DURING LAND DISTURBANCE ACTIVITIES AND UNTIL FINAL STABILIZATION IS ACHIEVED. SEDIMENT-LADEN GROUNDWATER ENCOUNTERED DURING TRENCHING, BORING, OR OTHER ACTIVITIES SHALL BE PUMPED INTO A SEDIMENT TRAPPING DEVICE PRIOR TO BEING DISCHARGED INTO A STREAM, POND, SWALE, OR CATCH BASIN.
9. SOIL STOCKPILE AND LAYDOWN AREAS SHALL HAVE PERIMETER SEDIMENT CONTROL MEASURES AND TEMPORARY OR PERMANENT STABILIZATION MEASURES INSTALLED AS SOON AS POSSIBLE AND AT COMPLETION OF STOCKPILING AND LAYDOWN ACTIVITIES. STOCKPILE SIDE SLOPES SHALL NOT EXCEED 3H ; 1V UNLESS APPROVED BY ENGINEER. TOP OF STOCKPILE SHALL BE GRADED WITH A MINIMUM 5% SLOPE TO INSURE PROPER DRAINAGE.
10. ALL DISTURBED AREAS, EXCEPT FOR CONCRETE AND PAVED AREAS, SHALL BE FERTILIZED, SEEDED AND MULCHED IN ACCORDANCE WITH THE SPECIFICATIONS AND THE SEEDING SCHEDULE, AND RE-SEEDED AS NECESSARY, TO ESTABLISH AND MAINTAIN A VIGOROUS, DENSE VEGETATIVE COVER.
11. ALL POINTS OF CONSTRUCTION INGRESS AND EGRESS SHALL BE PROTECTED TO PREVENT THE DEPOSITION OF MATERIALS ONTO TRAVERSED OFFSITE ROADWAYS. IF MATERIAL IS TRACKED ONTO OFFSITE ROADWAYS, IT SHALL BE REMOVED IMMEDIATELY. DO NOT UTILIZE A WATER HOSE TO CLEAN ROADS UNLESS THE RUNOFF IS DIRECTED TO A PROPERLY DESIGNED AND FUNCTIONING SEDIMENT CONTROL DEVICE. PROPER PRECAUTIONS SHALL BE TAKEN TO ENSURE THAT MATERIALS DEPOSITED ONTO OFFSITE ROADWAYS ARE REMOVED SO THAT THEY DO NOT ENTER YARD INLETS, CATCH BASINS, SEWERS, WETLANDS, SURFACE WATER BODIES, OR ROADSIDE SWALES.
12. ALL CONCRETE EQUIPMENT WASHING MUST BE DONE IN AN APPROVED "CONCRETE CONTAINMENT AREA". CONTRACTOR SHALL NOT DISCHARGE ANY CONCRETE WASHOUT WATER INTO SEWERS, SURFACE WATER BODIES OR ONTO THE GROUND. ALL WASHOUT WATER MUST BE REMOVED FROM THE SITE(S) DAILY.
13. EARTHEN-MATERIAL STOCKPILES MUST BE LOCATED A MINIMUM OF 50' FROM STORM DRAINS AND STREAMS UNLESS NO REASONABLE ALTERNATIVES ARE AVAILABLE.
14. ALL EARTHEN STOCKPILES AND SURCHARGE MOUNDS GREATER THAN 10' IN HEIGHT OR HAVING SIDE SLOPES GREATER THAN 3:1 MUST BE ENCAPSULATED BY A DOUBLE ROW OF SILT FENCE. THE FIRST ROW OF SILT FENCE SHALL BE SPACED NO GREATER THAN 10' FROM THE TOE OF THE MOUND. THE SECOND ROW OF SILT FENCE SHALL BE SPACED 5' FROM THE FIRST ROW. IN THE EVENT THE SITE DOES NOT HAVE PERIMETER EROSION AND SEDIMENT CONTROLS INSTALLED, THEN DOUBLE ROW SILT FENCING IS REQUIRED REGARDLESS OF THE STOCKPILE OR SURCHARGE HEIGHT.
15. DEDICATED AREAS FOR DEMOLITION, CONSTRUCTION, AND OTHER WASTES MUST BE LOCATED A MINIMUM OF 50' FROM STORM DRAINS AND STREAMS UNLESS NO REASONABLE ALTERNATIVES ARE AVAILABLE.
16. PAVED ROADWAYS MUST BE KEPT CLEAN AT ALL TIMES. WATER SHALL NOT BE USED TO CLEAN ROADS UNLESS THE RUNOFF IS DIRECTED TO A PROPERLY DESIGNED AND FUNCTIONING SEDIMENT CONTROL DEVICE. WATER PUMPED OUT OF THE EXCAVATED AREAS CONTAINS SEDIMENTS THAT MUST BE REMOVED PRIOR TO DISCHARGING TO RECEIVING BODIES OF WATER USING REMOVABLE PUMPING STATIONS, SUMP PITS, PORTABLE SEDIMENTATION TANKS AND/OR SILT CONTROL BAGS.
17. ALL EROSION AND SEDIMENT CONTROL MEASURES SHALL REMAIN IN PLACE UNTIL CONSTRUCTION IS COMPLETE, PERMANENT VEGETATION IS ESTABLISHED ON ALL DISTURBED AREAS, AND LOCAL AUTHORITIES HAVE GIVEN PERMISSION FOR REMOVAL.

SITE INFORMATION

OWNER:
CITY OF WINCHESTER, VIRGINIA
15 NORTH CAMERON STREET
WINCHESTER, VA 22601

PENNSYLVANIA AVENUE SITE ADDRESS:
1010 PENNSYLVANIA AVENUE
WINCHESTER, VA 22601

CONWAY SITE ADDRESS:
1226 CONWAY STREET
WINCHESTER, VA 22601

PROJECT NARRATIVE

THIS PROJECT REPLACES TWO OF THE CITY OF WINCHESTER'S EXISTING WASTEWATER PUMP STATIONS WITH NEW STATIONS. NEW STATIONS INCLUDE: WET WELLS, VALVE VAULTS, METERING VAULTS, EQUIPMENT, ELECTRICAL BUILDINGS, EMERGENCY GENERATORS, AND ASSOCIATED STRUCTURES AND EQUIPMENT. EACH PUMP STATION REPLACEMENT RESULTS IN LESS THAN 10,000 SF OF DISTURBANCE, AND THEREFORE DOES NOT REQUIRE STORMWATER MANAGEMENT.

PENNSYLVANIA AVENUE SURVEY AND ENVIRONMENTAL NOTES

1. EXISTING SITE FEATURES BASED ON SURVEY PERFORMED BY TRIAD ENGINEERING, INC DATED JULY 2017.

2. HORIZONTAL DATUM IS NAD 1983 AND VERTICAL DATUM IS NAVD 1988. SURVEY WAS PERFORMED BY TRIAD ENGINEERING, INC AND DATED JULY 2017.

3. FLOODPLAIN INFORMATION BASED ON FEMA FIRM MAP NUMBER 51069C0208D, EFFECTIVE DATE SEPTEMBER 2, 2009.

4. THE PENNSYLVANIA AVENUE PUMP STATION CURRENTLY RESIDES IN ZONE AE WITHIN A FLOODWAY. A LETTER OF MAP REVISION (LOMR) IS BEING PROCESSED BY FEMA.

5. A DESIGN 100-YEAR FLOOD ELEVATION OF 726 FEET IS ASSUMED FOR PENNSYLVANIA AVENUE BASED ON RESULTS OF A FLOOD STUDY PERFORMED BY PAINTER-LEWIS, P.L.C. DATED SEPTEMBER 24, 2018. THIS IS BASED OFF THE 100-YEAR FLOOD ELEVATIONS FOR THE ADJACENT TRIBUTARIES TO THIS SITE OBTAINED FROM FEMA FIRM MAP NUMBER 51069C0208D EFFECTIVE 9/2/2009. VERTICAL DATUM REFERENCED BY FEMA FIRM MAP NUMBER 51069C0208D IS NAVD 88.

CONWAY SURVEY AND ENVIRONMENTAL NOTES

1. EXISTING SITE FEATURES BASED ON SURVEY PERFORMED BY TRIAD ENGINEERING, INC DATED JULY 2018.

2. HORIZONTAL DATUM IS NAD 1983 AND VERTICAL DATUM IS NAVD 1988. SURVEY WAS PERFORMED BY TRIAD ENGINEERING, INC AND DATED JULY 2018.

3. CONWAY FLOODPLAIN INFORMATION BASED ON FEMA FIRM MAP NUMBER 51069C0217D, EFFECTIVE DATE SEPTEMBER 2, 2009.

4. THERE ARE NO FLOODPLAIN OR RPA LIMITS WITHIN THE AREA OF THE CONWAY PUMP STATION PROJECT.

LEGEND

SYMBOLS

POWER POLE
TB20 SOIL BORING
GRAVEL CONSTRUCTION ENTRANCE
WM WATER METER
TREE
LIGHT POLE
WV WATER VALVE
CONCRETE MONUMENT
SIGN
PROPERTY CORNER
GUY POLE
BM BENCHMARK
SF SILT FENCE
TS TEMPORARY SEEDING
PS PERMANENT SEEDING
CE CONSTRUCTION ENTRANCE

NEW	DEMO	EXISTING	
			BUILDING/STRUCTURE
			CONCRETE CURB AND GUTTER
			GRAVEL ROAD
			ASPHALT PAVEMENT
			CLEAR AND GRUB

NEW	EXISTING	
(RESET/NEW)		FENCE
		CONCRETE SIDEWALK
300	300	CONTOUR
302.00	302.00	SPOT ELEVATION
		PROPERTY LINE
		EASEMENT LINES
SF		SILT FENCE
TPF		TREE PROTECTION FENCE
LOD LOD		LIMITS OF DISTURBANCE

NEW	EXISTING	
		APPROXIMATE WOODLINE
SD	SD	STORM DRAIN LINE
	D	STORM MANHOLE
10 S	S	SANITARY SEWER MANHOLE
11		YARD INLET
12		CURB INLET
		HYDRANT
		HEADWALL
		THRUST BLOCK

ABBREVIATIONS

℄	CENTER LINE	NRCS	NATURAL RESOURCES CONSERVATION SERVICE	W	WATER
EOP	EDGE OF PAVEMENT	OHE	OVERHEAD ELECTRIC	WWPS	WASTEWATER PUMP STATION
FOC	FIBER OPTIC CABLE	PP	POWER POLE		
G, GAS	GAS/GAS LINE	⅊	PROPERTY LINE		
HSG	HYDROLOGIC SOIL GROUP	RECM	ROLLED EROSION CONTROL MATTING		
LOC	LIMITS OF CONSTRUCTION	SS	SANITARY SEWER		
LOD	LIMITS OF DISTURBANCE	UGE	UNDERGROUND ELECTRIC		
LOMR	LETTER OF MAP REVISION	VESCP	VIRGINIA EROSION AND SEDIMENT CONTROL PLAN		
LP	LIGHT POLE				

REV	ISSUED FOR	DATE	BY
	PERMITTING SUBMITTAL	10/2019	AMF

PROJECT ENGINEER: A. FALLON
DESIGNED BY: S. NASH
DRAWN BY: J. BARNAK
CHECKED BY: J. PETERY
IF THIS BAR DOES NOT MEASURE 1" THEN DRAWING IS NOT TO FULL SCALE 0 1/2" 1"

CONSTRUCTION SET

COMMONWEALTH OF VIRGINIA
JOEL K. PETERY
Lic. No.036763
02-04-2020
PROFESSIONAL ENGINEER

Hazen
HAZEN AND SAWYER
4035 RIDGE TOP ROAD, SUITE 400
FAIRFAX, VA 22030

CITY OF WINCHESTER
WINCHESTER, VIRGINIA

PENNSYLVANIA AVENUE AND CONWAY WASTEWATER PUMP STATIONS REPLACEMENT

GENERAL

CIVIL AND EROSION AND SEDIMENT CONTROL NOTES

DATE: FEBRUARY 2020
HAZEN NO.: 31294-007/014
CONTRACT NO.:
DRAWING NUMBER: C1

PLOT DATE: 2020/02/03 1:04:04 PM BY: ADURNELL
File: G:\31294-RIC\31294-014\ENGINEERING\CIVIL\GEN\C-1 Saved By PVANDOREN Save Date: 2019/08/20 9:06 AM

PENNSYLVANIA AVENUE WWPS EROSION CONTROL NARRATIVE

PROJECT DESCRIPTION:

THE CITY OF WINCHESTER IS REPLACING THE EXISTING PUMP STATION WITH A NEW PUMP STATION. THE EXISTING PUMP STATION AND ASSOCIATED PIPING WILL BE PARTIALLY DEMOLISHED AND ABANDONED IN PLACE. THE NEW STATION WILL CONSIST OF A PRE-CAST WET WELL, VALVE VAULT, METER VAULT, ELECTRICAL BUILDING, EMERGENCY GENERATOR, ASSOCIATED EQUIPMENT AND PIPING, AND A NEW POTABLE WATER CONNECTION. ALL EQUIPMENT WILL RESIDE A MINIMUM OF ONE FOOT ABOVE THE 100-YR BASE FLOOD ELEVATION. THE TOTAL LAND DISTURBANCE FOR THE PROJECT IS 0.09 ACRES.

EXISTING SITE CONDITIONS:

PAWWPS CURRENTLY CONTAINS THE PUMP STATION STRUCTURE, DRY WELL AND ELECTRICAL PANELS SURROUNDED BY CHAIN LINK FENCE. SEVERAL VARIETIES AND SIZES OF TREES PROVIDE A BUFFER BETWEEN THE ADJACENT RESIDENTIAL PROPERTIES AND THE SITE. THE SITE IS ZONED RP, RESIDENTIAL, PERFORMANCE DISTRICT.

ADJACENT AREAS:

THE PROJECT SITE IS LOCATED AT THE TERMINUS OF PENNSYLVANIA AVENUE, ADJACENT TO RESIDENTIAL PROPERTIES. A STREAM RUNS PARALLEL TO THE SITE ALONG THE SOUTH WESTERN PROPERTY LINE.

OFF-SITE AREAS:

NO OFF-SITE LAND DISTURBING ACTIVITIES ARE PLANNED. ANY OFF-SITE LAND DISTURBANCE ACTIVITIES WILL REQUIRE A SEPARATE PERMIT BY THE CONTRACTOR.

SOILS:

SOILS WITHIN THE PROJECT AREA ARE CLASSIFIED BY NRCS AS MASSANETTA LOAM. SOIL CHARACTERISTICS FOR EACH TYPE FOUND WITHIN THE PROJECT AREA INCLUDE:

MASSANETTA LOAM:

DRAINAGE CLASS - MODERATELY WELL DRAINED

HSG - C

RUNOFF CLASS - LOW

DEPTH TO WATER - ABOUT 24 TO 42 INCHES

FLOOD FREQUENCY - OCCASIONAL

CRITICAL EROSION AREAS:

THERE ARE NO CRITICAL EROSION AREAS FOR THIS PROJECT.

EROSION AND SEDIMENT CONTROL MEASURES:

THE FOLLOWING VESCH CONTROLS TO BE USED INCLUDE:

CONSTRUCTION ENTRANCE PER STD 3.02

SILT FENCE PER STD 3.05

TREE PROTECTION PER STD 3.38

PERMANENT STABILIZAITON:

ONCE FINAL GRADING HAS BEEN COMPLETE, PERMANENT STABILIZATION MEASURES (SEEDING AND MATTING) SHALL BE ESTABLISHED WITHIN FOURTEEN (14) DAYS. THE RE-GRADED AREAS SHALL BE PERMANENTLY SEEDED IN ACCORDANCE WITH THE VIRGINIA EROSION AND SEDIMENT CONTROL HANDBOOK.

STORMWATER RUNOFF CONSIDERATIONS:

RUN-OFF FROM THE PAWWPS WILL SHEET FLOW TO THE ADJACENT STREAM. STORMWATER MANAGEMENT IS NOT REQUIRED FOR THIS PROJECT AS LAND DISTURBANCE DOES NOT EXCEED 1 ACRE.

CALCULATIONS:

ALL EROSION CONTROL CALCULATIONS MAY BE FOUND IN THE HARD COPY EROSION CONTROL NARRATIVE.

EROSION AND SEDIMENT CONTROL MAINTENANCE NOTES:

1. ALL EROSION AND SEDIMENT CONTROL MEASURES SHALL BE INSPECTED ONCE EVERY SEVEN CALENDAR DAYS AND IMMEDIATELY FOLLOWING ANY SIGNIFICANT RAINFALL EVENT THAT PRODUCES 1/2-INCH OR GREATER. REPAIRS TO, OR REPLACEMENT OF, MEASURES SHALL OCCUR IMMEDIATELY IF NECESSARY AND ACCUMULATED SEDIMENT REMOVED AS NEEDED.
2. SILT FENCE SHALL BE INSPECTED REGULARLY FOR UNDERMINING OR DETERIORATION OF THE FABRIC AND/OR POSTS. SEDIMENT SHALL BE REMOVED FROM BEHIND SILT FENCING WHEN IT BECOMES APPROXIMATELY 0.5 FEET DEEP AT THE FENCE.
3. THE SEEDED AREAS SHALL BE INSPECTED REGULARLY TO ENSURE THAT A GOOD STAND IS MAINTAINED. AREAS SHOULD BE FERTILIZED AND RE-SEEDED AS NEEDED.
4. ALL TEMPORARY EROSION AND SEDIMENT CONTROL MEASURES SHALL BE REMOVED WITHIN 30 DAYS AFTER FINAL SITE STABILIZATION OR AFTER THE TEMPORARY MEASURES ARE NO LONGER NEEDED.
5. ADJACENT ROADWAYS SHALL BE CLEANED DAILY AT A MINIMUM AT THE END OF THE WORK DAY AND AS FREQUENTLY AS NEEDED TO MAINTAIN SAFE DRIVING CONDITION. ANY SEDIMENT OR MUD TRACKED ONTO THE ROAD THAT CREATES A SAFETY HAZARD MUST BE REMOVED IMMEDIATELY.

CONWAY WWPS EROSION CONTROL NARRATIVE

PROJECT DESCRIPTION:

THE CITY OF WINCHESTER IS REPLACING THE EXISTING PUMP STATION WITH A NEW PUMP STATION. THE NEW STATION WILL CONSIST OF A PRE-CAST WET WELL, VALVE VAULT, METER VAULT, ELECTRICAL BUILDING, EMERGENCY GENERATOR, ASSOCIATED EQUIPMENT AND PIPING, AND A NEW POTABLE WATER CONNECTION. THE EXISTING PUMP STATION AND ASSOCIATED PIPING WILL BE PARTIALLY DEMOLISHED AND ABANDONED IN PLACE. THE TOTAL LAND DISTURBANCE FOR THE PROJECT IS 0.16 ACRES.

EXISTING SITE CONDITIONS:

THE CONWAY WWPS SITE CONSISTS OF A PUMP STATION AND TRANSFORMER AND IS SURROUNDED BY CHAIN LINK FENCE. SEVERAL VARIETIES AND SIZES OF TREES PROVIDE A BUFFER BETWEEN THE ADJACENT RESIDENTIAL PROPERTIES AND INTERSTATE 81 ON/OFF RAMP. THE SITE IS ZONED B2, GENERAL BUSINESS DISTRICT.

ADJACENT AREAS:

THE PROJECT SITE IS LOCATED ADJACENT TO RESIDENTIAL PROPERTIES AND THE HAMPTON INN PARKING LOT. INTERSTATE 81 EXIT RAMP RUNS ALONG THE BACK SIDE OF THE PROPERTY WITH A TREE BUFFER BETWEEN.

OFF-SITE AREAS:

NO OFF-SITE LAND DISTURBING ACTIVITIES ARE PLANNED. ANY OFF-SITE LAND DISTURBANCE ACTIVITIES WILL REQUIRE A SEPARATE PERMIT BY THE CONTRACTOR.

SOILS:

SOILS WITHIN THE PROJECT AREA ARE CLASSIFIED BY NRCS AS WEIKERT-BERKS CHANNERY SILT LOAM, CLEARBROOK CHANNERY SILT LOAM, AND URBAN LAND. SOIL CHARACTERISTICS FOR EACH TYPE FOUND WITHIN THE PROJECT AREA INCLUDE:

WEIKERT-BERKS CHANNERY SILT LOAM:

DRAINAGE CLASS - WELL DRAINED

HSG - D

RUNOFF CLASS - HIGH

DEPTH TO WATER - MORE THAN 80 INCHES

FLOOD FREQUENCY - NONE

CLEARBROOK CHANNERY SILT LOAM:

DRAINAGE CLASS - SOMEWHAT POORLY DRAINED

HSG - C/D

RUNOFF CLASS - VERY HIGH

DEPTH TO WATER - ABOUT 3 TO 12 INCHES

FLOOD FREQUENCY - NONE

URBAN LAND

RUNOFF CLASS - VERY HIGH

DEPTH TO RESTRICTIVE FEATURE - 0 INCHES TO MANUFACTURED LAYER

CRITICAL EROSION AREAS:

THERE ARE NO CRITICAL EROSION AREAS FOR THIS PROJECT.

EROSION AND SEDIMENT CONTROL MEASURES:

THE FOLLOWING VESCH CONTROLS TO BE USED INCLUDE:

SILT FENCE PER STD 3.05

TREE PROTECTION PER STD 3.38

PERMANENT STABILIZATION:

ONCE FINAL GRADING HAS BEEN COMPLETE, PERMANENT STABILIZATION MEASURES (SEEDING AND MATTING) SHALL BE ESTABLISHED WITHIN FOURTEEN (14) DAYS. THE RE-GRADED AREAS SHALL BE PERMANENTLY SEEDED IN ACCORDANCE WITH THE VIRGINIA EROSION AND SEDIMENT CONTROL HANDBOOK.

STORMWATER RUNOFF CONSIDERATIONS:

RUNOFF FLOWS AWAY FROM THE CONWAY PUMP STATION TO A CULVERT WHICH FLOWS UNDERNEATH INTERSTATE 81. STORMWATER MANAGEMENT IS NOT REQUIRED FOR THIS PROJECT AS LAND DISTURBANCE DOES NOT EXCEED 1 ACRE.

CALCULATIONS:

ALL EROSION CONTROL CALCULATIONS MAY BE FOUND IN THE HARD COPY EROSION CONTROL NARRATIVE.

EROSION AND SEDIMENT CONTROL MAINTENANCE NOTES:

1. ALL EROSION AND SEDIMENT CONTROL MEASURES SHALL BE INSPECTED ONCE EVERY SEVEN CALENDAR DAYS AND IMMEDIATELY FOLLOWING ANY SIGNIFICANT RAINFALL EVENT THAT PRODUCES 1/2-INCH OR GREATER. REPAIRS TO, OR REPLACEMENT OF, MEASURES SHALL OCCUR IMMEDIATELY IF NECESSARY AND ACCUMULATED SEDIMENT REMOVED AS NEEDED.
2. SILT FENCE SHALL BE INSPECTED REGULARLY FOR UNDERMINING OR DETERIORATION OF THE FABRIC AND/OR POSTS. SEDIMENT SHALL BE REMOVED FROM BEHIND SILT FENCING WHEN IT BECOMES APPROXIMATELY 0.5 FEET DEEP AT THE FENCE.
3. THE SEEDED AREAS SHALL BE INSPECTED REGULARLY TO ENSURE THAT A GOOD STAND IS MAINTAINED. AREAS SHOULD BE FERTILIZED AND RE-SEEDED AS NEEDED.
4. ALL TEMPORARY EROSION AND SEDIMENT CONTROL MEASURES SHALL BE REMOVED WITHIN 30 DAYS AFTER FINAL SITE STABILIZATION OR AFTER THE TEMPORARY MEASURES ARE NO LONGER NEEDED.
5. ADJACENT ROADWAYS SHALL BE CLEANED DAILY AT A MINIMUM AT THE END OF THE WORK DAY AND AS FREQUENTLY AS NEEDED TO MAINTAIN SAFE DRIVING CONDITION. ANY SEDIMENT OR MUD TRACKED ONTO THE ROAD THAT CREATES A SAFETY HAZARD MUST BE REMOVED IMMEDIATELY.

9VAC25-840-40. MINIMUM STANDARDS.

A VESCP MUST BE CONSISTENT WITH THE FOLLOWING CRITERIA, TECHNIQUES AND METHODS:

1. PERMANENT OR TEMPORARY SOIL STABILIZATION SHALL BE APPLIED TO DENUDED AREAS WITHIN SEVEN DAYS AFTER FINAL GRADE IS REACHED ON ANY PORTION OF THE SITE. TEMPORARY SOIL STABILIZATION SHALL BE APPLIED WITHIN SEVEN DAYS TO DENUDED AREAS THAT MAY NOT BE AT FINAL GRADE BUT WILL REMAIN DORMANT FOR LONGER THAN 14 DAYS. PERMANENT STABILIZATION SHALL BE APPLIED TO AREAS THAT ARE TO BE LEFT DORMANT FOR MORE THAN ONE YEAR.

2. DURING CONSTRUCTION OF THE PROJECT, SOIL STOCK PILES AND BORROW AREAS SHALL BE STABILIZED OR PROTECTED WITH SEDIMENT TRAPPING MEASURES. THE APPLICANT IS RESPONSIBLE FOR THE TEMPORARY PROTECTION AND PERMANENT STABILIZATION OF ALL SOIL STOCKPILES ON SITE AS WELL AS BORROW AREAS AND SOIL INTENTIONALLY TRANSPORTED FROM THE PROJECT SITE.

3. A PERMANENT VEGETATIVE COVER SHALL BE ESTABLISHED ON DENUDED AREAS NOT OTHERWISE PERMANENTLY STABILIZED. PERMANENT VEGETATION SHALL NOT BE CONSIDERED ESTABLISHED UNTIL A GROUND COVER IS ACHIEVED THAT IS UNIFORM, MATURE ENOUGH TO SURVIVE AND WILL INHIBIT EROSION.

4. SEDIMENT BASINS AND TRAPS, PERIMETER DIKES, SEDIMENT BARRIERS AND OTHER MEASURES INTENDED TO TRAP SEDIMENT SHALL BE CONSTRUCTED AS A FIRST STEP IN ANY LAND-DISTURBING ACTIVITY AND SHALL BE MADE FUNCTIONAL BEFORE UPSLOPE LAND DISTURBANCE TAKES PLACE.

5. STABILIZATION MEASURES SHALL BE APPLIED TO EARTHEN STRUCTURES SUCH AS DAMS, DIKES AND DIVERSIONS IMMEDIATELY AFTER INSTALLATION.

6. SEDIMENT TRAPS AND SEDIMENT BASINS SHALL BE DESIGNED AND CONSTRUCTED BASED UPON THE TOTAL DRAINAGE AREA TO BE SERVED BY THE TRAP OR BASIN.

a. THE MINIMUM STORAGE CAPACITY OF A SEDIMENT TRAP SHALL BE 134 CUBIC YARDS PER ACRE OF DRAINAGE AREA AND THE TRAP SHALL ONLY CONTROL DRAINAGE AREAS LESS THAN THREE ACRES.

b. SURFACE RUNOFF FROM DISTURBED AREAS THAT IS COMPRISED OF FLOW FROM DRAINAGE AREAS GREATER THAN OR EQUAL TO THREE ACRES SHALL BE CONTROLLED BY A SEDIMENT BASIN. THE MINIMUM STORAGE CAPACITY OF A SEDIMENT BASIN SHALL BE 134 CUBIC YARDS PER ACRE OF DRAINAGE AREA. THE OUTFALL SYSTEM SHALL, AT A MINIMUM, MAINTAIN THE STRUCTURAL INTEGRITY OF THE BASIN DURING A 25-YEAR STORM OF 24-HOUR DURATION. RUNOFF COEFFICIENTS USED IN RUNOFF CALCULATIONS SHALL CORRESPOND TO A BARE EARTH CONDITION OR THOSE CONDITIONS EXPECTED TO EXIST WHILE THE SEDIMENT BASIN IS UTILIZED.

7. CUT AND FILL SLOPES SHALL BE DESIGNED AND CONSTRUCTED IN A MANNER THAT WILL MINIMIZE EROSION. SLOPES THAT ARE FOUND TO BE ERODING EXCESSIVELY WITHIN ONE YEAR OF PERMANENT STABILIZATION SHALL BE PROVIDED WITH ADDITIONAL SLOPE STABILIZING MEASURES UNTIL THE PROBLEM IS CORRECTED.

8. CONCENTRATED RUNOFF SHALL NOT FLOW DOWN CUT OR FILL SLOPES UNLESS CONTAINED WITHIN AN ADEQUATE TEMPORARY OR PERMANENT CHANNEL, FLUME OR SLOPE DRAIN STRUCTURE.

9. WHENEVER WATER SEEPS FROM A SLOPE FACE, ADEQUATE DRAINAGE OR OTHER PROTECTION SHALL BE PROVIDED.

10. ALL STORM SEWER INLETS THAT ARE MADE OPERABLE DURING CONSTRUCTION SHALL BE PROTECTED SO THAT SEDIMENT-LADEN WATER CANNOT ENTER THE CONVEYANCE SYSTEM WITHOUT FIRST BEING FILTERED OR OTHERWISE TREATED TO REMOVE SEDIMENT.

11. BEFORE NEWLY CONSTRUCTED STORMWATER CONVEYANCE CHANNELS OR PIPES ARE MADE OPERATIONAL, ADEQUATE OUTLET PROTECTION AND ANY REQUIRED TEMPORARY OR PERMANENT CHANNEL LINING SHALL BE INSTALLED IN BOTH THE CONVEYANCE CHANNEL AND RECEIVING CHANNEL.

12. WHEN WORK IN A LIVE WATERCOURSE IS PERFORMED, PRECAUTIONS SHALL BE TAKEN TO MINIMIZE ENCROACHMENT, CONTROL SEDIMENT TRANSPORT AND STABILIZE THE WORK AREA TO THE GREATEST EXTENT POSSIBLE DURING CONSTRUCTION. NONERODIBLE MATERIAL SHALL BE USED FOR THE CONSTRUCTION OF CAUSEWAYS AND COFFERDAMS. EARTHEN FILL MAY BE USED FOR THESE STRUCTURES IF ARMORED BY NONERODIBLE COVER MATERIALS.

13. WHEN A LIVE WATERCOURSE MUST BE CROSSED BY CONSTRUCTION VEHICLES MORE THAN TWICE IN ANY SIX-MONTH PERIOD, A TEMPORARY VEHICULAR STREAM CROSSING CONSTRUCTED OF NONERODIBLE MATERIAL SHALL BE PROVIDED.

14. ALL APPLICABLE FEDERAL, STATE AND LOCAL REQUIREMENTS PERTAINING TO WORKING IN OR CROSSING LIVE WATERCOURSES SHALL BE MET.

15. THE BED AND BANKS OF A WATERCOURSE SHALL BE STABILIZED IMMEDIATELY AFTER WORK IN THE WATERCOURSE IS COMPLETED.

16. UNDERGROUND UTILITY LINES SHALL BE INSTALLED IN ACCORDANCE WITH THE FOLLOWING STANDARDS IN ADDITION TO OTHER APPLICABLE CRITERIA:

a. NO MORE THAN 500 LINEAR FEET OF TRENCH MAY BE OPENED AT ONE TIME.

b. EXCAVATED MATERIAL SHALL BE PLACED ON THE UPHILL SIDE OF TRENCHES.

c. EFFLUENT FROM DEWATERING OPERATIONS SHALL BE FILTERED OR PASSED THROUGH AN APPROVED SEDIMENT TRAPPING DEVICE, OR BOTH, AND DISCHARGED IN A MANNER THAT DOES NOT ADVERSELY AFFECT FLOWING STREAMS OR OFF-SITE PROPERTY.

d. MATERIAL USED FOR BACKFILLING TRENCHES SHALL BE PROPERLY COMPACTED IN ORDER TO MINIMIZE EROSION AND PROMOTE STABILIZATION.

e. RESTABILIZATION SHALL BE ACCOMPLISHED IN ACCORDANCE WITH THIS CHAPTER.

f. APPLICABLE SAFETY REQUIREMENTS SHALL BE COMPLIED WITH.

17. WHERE CONSTRUCTION VEHICLE ACCESS ROUTES INTERSECT PAVED OR PUBLIC ROADS, PROVISIONS SHALL BE MADE TO MINIMIZE THE TRANSPORT OF SEDIMENT BY VEHICULAR TRACKING ONTO THE PAVED SURFACE. WHERE SEDIMENT IS TRANSPORTED ONTO A PAVED OR PUBLIC ROAD SURFACE, THE ROAD SURFACE SHALL BE CLEANED THOROUGHLY AT THE END OF EACH DAY. SEDIMENT SHALL BE REMOVED FROM THE ROADS BY SHOVELING OR SWEEPING AND TRANSPORTED TO A SEDIMENT CONTROL DISPOSAL AREA. STREET WASHING SHALL BE ALLOWED ONLY AFTER SEDIMENT IS REMOVED IN THIS MANNER. THIS PROVISION SHALL APPLY TO INDIVIDUAL DEVELOPMENT LOTS AS WELL AS TO LARGER LAND-DISTURBING ACTIVITIES.

18. ALL TEMPORARY EROSION AND SEDIMENT CONTROL MEASURES SHALL BE REMOVED WITHIN 30 DAYS AFTER FINAL SITE STABILIZATION OR AFTER THE TEMPORARY MEASURES ARE NO LONGER NEEDED, UNLESS OTHERWISE AUTHORIZED BY THE VESCP AUTHORITY. TRAPPED SEDIMENT AND THE DISTURBED SOIL AREAS RESULTING FROM THE DISPOSITION OF TEMPORARY MEASURES SHALL BE PERMANENTLY STABILIZED TO PREVENT FURTHER EROSION AND SEDIMENTATION.

19. PROPERTIES AND WATERWAYS DOWNSTREAM FROM DEVELOPMENT SITES SHALL BE PROTECTED FROM SEDIMENT DEPOSITION, EROSION AND DAMAGE DUE TO INCREASES IN VOLUME, VELOCITY AND PEAK FLOW RATE OF STORMWATER RUNOFF FOR THE STATED FREQUENCY STORM OF 24-HOUR DURATION IN ACCORDANCE WITH THE FOLLOWING STANDARDS AND CRITERIA. STREAM RESTORATION AND RELOCATION PROJECTS THAT INCORPORATE NATURAL CHANNEL DESIGN CONCEPTS ARE NOT MAN-MADE CHANNELS AND SHALL BE EXEMPT FROM ANY FLOW RATE CAPACITY AND VELOCITY REQUIREMENTS FOR NATURAL OR MAN-MADE CHANNELS:

a. CONCENTRATED STORMWATER RUNOFF LEAVING A DEVELOPMENT SITE SHALL BE DISCHARGED DIRECTLY INTO AN ADEQUATE NATURAL OR MAN-MADE RECEIVING CHANNEL, PIPE OR STORM SEWER SYSTEM. FOR THOSE SITES WHERE RUNOFF IS DISCHARGED INTO A PIPE OR PIPE SYSTEM, DOWNSTREAM STABILITY ANALYSES AT THE OUTFALL OF THE PIPE OR PIPE SYSTEM SHALL BE PERFORMED.

b. ADEQUACY OF ALL CHANNELS AND PIPES SHALL BE VERIFIED IN THE FOLLOWING MANNER:

(1) THE APPLICANT SHALL DEMONSTRATE THAT THE TOTAL DRAINAGE AREA TO THE POINT OF ANALYSIS WITHIN THE CHANNEL IS ONE HUNDRED TIMES GREATER THAN THE CONTRIBUTING DRAINAGE AREA OF THE PROJECT IN QUESTION; OR

(2) (A) NATURAL CHANNELS SHALL BE ANALYZED BY THE USE OF A TWO-YEAR STORM TO VERIFY THAT STORMWATER WILL NOT OVERTOP CHANNEL BANKS NOR CAUSE EROSION OF CHANNEL BED OR BANKS.

(b) ALL PREVIOUSLY CONSTRUCTED MAN-MADE CHANNELS SHALL BE ANALYZED BY THE USE OF A TEN-YEAR STORM TO VERIFY THAT STORMWATER WILL NOT OVERTOP ITS BANKS AND BY THE USE OF A TWO-YEAR STORM TO DEMONSTRATE THAT STORMWATER WILL NOT CAUSE EROSION OF CHANNEL BED OR BANKS; AND

(c) PIPES AND STORM SEWER SYSTEMS SHALL BE ANALYZED BY THE USE OF A TEN-YEAR STORM TO VERIFY THAT STORMWATER WILL BE CONTAINED WITHIN THE PIPE OR SYSTEM.

c. IF EXISTING NATURAL RECEIVING CHANNELS OR PREVIOUSLY CONSTRUCTED MAN-MADE CHANNELS OR PIPES ARE NOT ADEQUATE, THE APPLICANT SHALL:

(1) IMPROVE THE CHANNELS TO A CONDITION WHERE A TEN-YEAR STORM WILL NOT OVERTOP THE BANKS AND A TWO-YEAR STORM WILL NOT CAUSE EROSION TO THE CHANNEL, THE BED, OR THE BANKS; OR

(2) IMPROVE THE PIPE OR PIPE SYSTEM TO A CONDITION WHERE THE TEN-YEAR STORM IS CONTAINED WITHIN THE APPURTENANCES;

(3) DEVELOP A SITE DESIGN THAT WILL NOT CAUSE THE PRE-DEVELOPMENT PEAK RUNOFF RATE FROM A TWO-YEAR STORM TO INCREASE WHEN RUNOFF OUTFALLS INTO A NATURAL CHANNEL OR WILL NOT CAUSE THE PRE-DEVELOPMENT PEAK RUNOFF RATE FROM A TEN-YEAR STORM TO INCREASE WHEN RUNOFF OUTFALLS INTO A MAN-MADE CHANNEL; OR

(4) PROVIDE A COMBINATION OF CHANNEL IMPROVEMENT, STORMWATER DETENTION OR OTHER MEASURES WHICH IS SATISFACTORY TO THE VESCP AUTHORITY TO PREVENT DOWNSTREAM EROSION.

d. THE APPLICANT SHALL PROVIDE EVIDENCE OF PERMISSION TO MAKE THE IMPROVEMENTS.

e. ALL HYDROLOGIC ANALYSES SHALL BE BASED ON THE EXISTING WATERSHED CHARACTERISTICS AND THE ULTIMATE DEVELOPMENT CONDITION OF THE SUBJECT PROJECT.

f. IF THE APPLICANT CHOOSES AN OPTION THAT INCLUDES STORMWATER DETENTION, HE SHALL OBTAIN APPROVAL FROM THE VESCP OF A PLAN FOR MAINTENANCE OF THE DETENTION FACILITIES. THE PLAN SHALL SET FORTH THE MAINTENANCE REQUIREMENTS OF THE FACILITY AND THE PERSON RESPONSIBLE FOR PERFORMING THE MAINTENANCE.

g. OUTFALL FROM A DETENTION FACILITY SHALL BE DISCHARGED TO A RECEIVING CHANNEL, AND ENERGY DISSIPATORS SHALL BE PLACED AT THE OUTFALL OF ALL DETENTION FACILITIES AS NECESSARY TO PROVIDE A STABILIZED TRANSITION FROM THE FACILITY TO THE RECEIVING CHANNEL.

h. ALL ON-SITE CHANNELS MUST BE VERIFIED TO BE ADEQUATE.

i. INCREASED VOLUMES OF SHEET FLOWS THAT MAY CAUSE EROSION OR SEDIMENTATION ON ADJACENT PROPERTY SHALL BE DIVERTED TO A STABLE OUTLET, ADEQUATE CHANNEL, PIPE OR PIPE SYSTEM, OR TO A DETENTION FACILITY.

j. IN APPLYING THESE STORMWATER MANAGEMENT CRITERIA, INDIVIDUAL LOTS OR PARCELS IN A RESIDENTIAL, COMMERCIAL OR INDUSTRIAL DEVELOPMENT SHALL NOT BE CONSIDERED TO BE SEPARATE DEVELOPMENT PROJECTS. INSTEAD, THE DEVELOPMENT, AS A WHOLE, SHALL BE CONSIDERED TO BE A SINGLE DEVELOPMENT PROJECT. HYDROLOGIC PARAMETERS THAT REFLECT THE ULTIMATE DEVELOPMENT CONDITION SHALL BE USED IN ALL ENGINEERING CALCULATIONS.

k. ALL MEASURES USED TO PROTECT PROPERTIES AND WATERWAYS SHALL BE EMPLOYED IN A MANNER WHICH MINIMIZES IMPACTS ON THE PHYSICAL, CHEMICAL AND BIOLOGICAL INTEGRITY OF RIVERS, STREAMS AND OTHER WATERS OF THE STATE.

l. ANY PLAN APPROVED PRIOR TO JULY 1, 2014, THAT PROVIDES FOR STORMWATER MANAGEMENT THAT ADDRESSES ANY FLOW RATE CAPACITY AND VELOCITY REQUIREMENTS FOR NATURAL OR MAN-MADE CHANNELS SHALL SATISFY THE FLOW RATE CAPACITY AND VELOCITY REQUIREMENTS FOR NATURAL OR MAN-MADE CHANNELS IF THE PRACTICES ARE DESIGNED TO (I) DETAIN THE WATER QUALITY VOLUME AND TO RELEASE IT OVER 48 HOURS; (II) DETAIN AND RELEASE OVER A 24-HOUR PERIOD THE EXPECTED RAINFALL RESULTING FROM THE ONE YEAR, 24-HOUR STORM; AND (III) REDUCE THE ALLOWABLE PEAK FLOW RATE RESULTING FROM THE 1.5, 2, AND 10-YEAR, 24-HOUR STORMS TO A LEVEL THAT IS LESS THAN OR EQUAL TO THE PEAK FLOW RATE FROM THE SITE ASSUMING IT WAS IN A GOOD FORESTED CONDITION, ACHIEVED THROUGH MULTIPLICATION OF THE FORESTED PEAK FLOW RATE BY A REDUCTION FACTOR THAT IS EQUAL TO THE RUNOFF VOLUME FROM THE SITE WHEN IT WAS IN A GOOD FORESTED CONDITION DIVIDED BY THE RUNOFF VOLUME FROM THE SITE IN ITS PROPOSED CONDITION, AND SHALL BE EXEMPT FROM ANY FLOW RATE CAPACITY AND VELOCITY REQUIREMENTS FOR NATURAL OR MAN-MADE CHANNELS AS DEFINED IN ANY REGULATIONS PROMULGATED PURSUANT TO § 62.1-44.15:54 OR 62.1-44.15:65 OF THE ACT.

m. FOR PLANS APPROVED ON AND AFTER JULY 1, 2014, THE FLOW RATE CAPACITY AND VELOCITY REQUIREMENTS OF § 62.1-44.15:52 A OF THE ACT AND THIS SUBSECTION SHALL BE SATISFIED BY COMPLIANCE WITH WATER QUANTITY REQUIREMENTS IN THE STORMWATER MANAGEMENT ACT (§ 62.1-44.15:24 ET SEQ. OF THE CODE OF VIRGINIA) AND ATTENDANT REGULATIONS, UNLESS SUCH LAND-DISTURBING ACTIVITIES ARE IN ACCORDANCE WITH 9VAC25-870-48 OF THE VIRGINIA STORMWATER MANAGEMENT PROGRAM (VSMP) REGULATIONS.

n. COMPLIANCE WITH THE WATER QUANTITY MINIMUM STANDARDS SET OUT IN 9VAC25-870-66 OF THE VIRGINIA STORMWATER MANAGEMENT PROGRAM (VSMP) REGULATIONS SHALL BE DEEMED TO SATISFY THE REQUIREMENTS OF SUBDIVISION 19 OF THIS SUBSECTION.

STATUTORY AUTHORITY

§ 62.1-44.15:52 OF THE CODE OF VIRGINIA.

HISTORICAL NOTES

FORMER 4VAC50-30-40, DERIVED FROM VR625-02-00 § 4; EFF SEPTEMBER 13, 1990; AMENDED, VIRGINIA REGISTER VOLUME 11, ISSUE 11, EFF. MARCH 22, 1995; VOLUME 29, ISSUE 4, EFF. NOVEMBER 21, 2012; AMENDED AND RENUMBERED, VIRGINIA REGISTER VOLUME 30, ISSUE 2, EFF. OCTOBER 23, 2013.

TABLE 6-1 (VIRGINIA EROSION AND SEDIMENT CONTROL HANDBOOK)

GENERAL EROSION AND SEDIMENT CONTROL NOTES

ES-1: UNLESS OTHERWISE INDICATED, ALL VEGETATIVE AND STRUCTURAL EROSION AND SEDIMENT CONTROL PRACTICES WILL BE CONSTRUCTED AND MAINTAINED ACCORDING TO MINIMUM STANDARDS AND SPECIFICATIONS OF THE VIRGINIA EROSION AND SEDIMENT CONTROL HANDBOOK AND THE VIRGINIA EROSION AND SEDIMENT CONTROL REGULATIONS 9VAC25-840.

ES-2: THE PLAN APPROVING AUTHORITY MUST BE NOTIFIED ONE WEEK PRIOR TO THE PRE-CONSTRUCTION CONFERENCE, ONE WEEK PRIOR TO THE COMMENCEMENT OF LAND DISTURBING ACTIVITY, AND ONE WEEK PRIOR TO THE FINAL INSPECTION.

ES-3: ALL EROSION AND SEDIMENT CONTROL MEASURES ARE TO BE PLACED PRIOR TO OR AS THE FIRST STEP IN CLEARING.

ES-4: A COPY OF THE APPROVED EROSION AND SEDIMENT CONTROL PLAN SHALL BE MAINTAINED ON THE SITE AT ALL TIMES.

ES-5: PRIOR TO COMMENCING LAND DISTURBING ACTIVITIES IN AREAS OTHER THAN INDICATED ON THESE PLANS (INCLUDING, BUT NOT LIMITED TO, OFF-SITE BORROW OR WASTE AREAS), THE CONTRACTOR SHALL SUBMIT A SUPPLEMENTARY EROSION CONTROL PLAN TO THE OWNER FOR REVIEW AND APPROVAL BY THE PLAN APPROVING AUTHORITY.

ES-6: THE CONTRACTOR IS RESPONSIBLE FOR INSTALLATION OF ANY ADDITIONAL EROSION CONTROL MEASURES NECESSARY TO PREVENT EROSION AND SEDIMENTATION AS DETERMINED BY THE PLAN APPROVING AUTHORITY.

ES-7: ALL DISTURBED AREAS ARE TO DRAIN TO APPROVED SEDIMENT CONTROL MEASURES AT ALL TIMES DURING LAND DISTURBING ACTIVITIES AND DURING SITE DEVELOPMENT UNTIL FINAL STABILIZATION IS ACHIEVED.

ES-8: DURING DEWATERING OPERATIONS, WATER WILL BE PUMPED INTO AN APPROVED FILTERING DEVICE.

ES-9: THE CONTRACTOR SHALL INSPECT ALL EROSION CONTROL MEASURES PERIODICALLY AND AFTER EACH RUNOFF-PRODUCING RAINFALL EVENT. ANY NECESSARY REPAIRS OR CLEANUP TO MAINTAIN THE EFFECTIVENESS OF THE EROSION CONTROL DEVICES SHALL BE MADE IMMEDIATELY.

REV	ISSUED FOR	DATE	BY
	PERMITTING SUBMITTAL	10/2019	AMF

PROJECT ENGINEER: A. FALLON
DESIGNED BY: S. NASH
DRAWN BY: S. NASH
CHECKED BY: J. PETERY

IF THIS BAR DOES NOT MEASURE 1" THEN DRAWING IS NOT TO FULL SCALE 0 1/2" 1"

CONSTRUCTION SET

COMMONWEALTH OF VIRGINIA
JOEL K. PETERY
Lic. No.036763
02-04-2020
PROFESSIONAL ENGINEER

Hazen
HAZEN AND SAWYER
4035 RIDGE TOP ROAD, SUITE 400
FAIRFAX, VA 22030

CITY OF WINCHESTER
WINCHESTER, VIRGINIA

PENNSYLVANIA AVENUE AND CONWAY WASTEWATER PUMP STATIONS REPLACEMENT

GENERAL

EROSION AND SEDIMENT CONTROL NOTES

DATE: FEBRUARY 2020
HAZEN NO.: 31294-007/014
CONTRACT NO.:
DRAWING NUMBER: C2

PLOT DATE: 2020/02/03 1:47:09 PM BY: ADARNELL
File: Q:\31294-RC\31294-014\ENGINEERING\CIVIL\CIVIL\C2 Saved By ADARNELL Save Date: 2020/02/03 1:46 PM

GENERAL STRUCTURAL NOTES

G-1 THESE NOTES ARE GENERAL AND SUPPLEMENT THE SPECIFICATIONS. THESE NOTES APPLY TO THE ENTIRE PROJECT UNLESS MODIFIED OR NOTED OTHERWISE IN THE CONTRACT DOCUMENTS.

G-2 STANDARD DETAILS SHALL BE USED WHEN REFERRED TO OR WHEN NO MORE RESTRICTIVE OR DIFFERENT DETAILS ARE SHOWN ON THE DRAWINGS.

G-3 DESIGN IS IN ACCORDANCE WITH AND CONSTRUCTION SHALL COMPLY WITH THE PROVISIONS OF THE VIRGINIA UNIFORM STATEWIDE BUILDING CODE. THE DESIGN LOADS AND OTHER DESIGN VALUES GIVEN IN NOTES G-4 THROUGH G-7 WERE USED FOR DESIGN OF STRUCTURES UNLESS NOTED OTHERWISE ON THE DRAWINGS.

G-4 ALL STAIRWAYS, LANDINGS AND PLATFORMS ARE DESIGNED FOR A LIVE LOAD = 100 PSF UNLESS NOTED OTHERWISE.

G-5 SNOW LOAD:

GROUND SNOW LOAD (Pg) = 25 PSF
FLAT-ROOF SNOW LOAD (Pf) = 22 PSF
SNOW EXPOSURE FACTOR (Ce) = 1.0
SNOW LOAD IMPORTANCE FACTOR (Is) = 1.1
THERMAL FACTOR (Ct) = 1.2

G-6 WIND DESIGN CRITERIA:

ULTIMATE DESIGN WIND SPEED (Vult) = 120 MPH
NOMINAL DESIGN WIND SPEED (Vasd) = 90 MPH
RISK CATEGORY = III
WIND IMPORTANCE FACTOR (Iw) = 1.0
WIND EXPOSURE = C

G-7 SEISMIC LOAD - PENNSYLVANIA AVENUE:

RISK CATEGORY = III
SEISMIC IMPORTANCE FACTOR (Ie) = 1.25
SITE CLASS = E
MAPPED SPECTRAL RESPONSE ACCELERATIONS (Ss/S1) = 0.131/0.055
SPECTRAL RESPONSE ACCELERATIONS (SMS/SM1) = 0.328/0.191
SPECTRAL RESPONSE COEFFICIENTS (SDS/SD1) = 0.219/0.127
SEISMIC DESIGN CATEGORY = B

G-8 SEISMIC LOAD - CONWAY STREET:

RISK CATEGORY = III
SEISMIC IMPORTANCE FACTOR (Ie) = 1.25
SITE CLASS = C
MAPPED SPECTRAL RESPONSE ACCELERATIONS (Ss/S1) = 0.131/0.055
SPECTRAL RESPONSE ACCELERATIONS (SMS/SM1) = 0.157/0.093
SPECTRAL RESPONSE COEFFICIENTS (SDS/SD1) = 0.105/0.062
SEISMIC DESIGN CATEGORY = A

G-9 ALL DIMENSIONS INDICATED FOR EXISTING STRUCTURES SHALL BE VERIFIED BY FIELD MEASUREMENT. ALL DIMENSIONS THAT ARE CONTROLLED BY OR RELATED TO EQUIPMENT SHALL BE VERIFIED BY THE CONTRACTOR WITH THE MANUFACTURER SHOP DRAWINGS PRIOR TO CONSTRUCTION.

G-10 THE CONTRACTOR IS RESPONSIBLE FOR VERIFYING ALL EXISTING INFORMATION IN THE FIELD AS REQUIRED FOR NEW WORK.

G-11 IF A CONFLICT IS FOUND BETWEEN DIFFERENT PORTIONS OF THE CONTRACT DOCUMENTS, THE CONTRACTOR SHALL NOTIFY THE ENGINEER IMMEDIATELY. CONTINUED CONSTRUCTION OF THE AREA IN CONFLICT SHALL BE AT THE CONTRACTOR'S OWN RISK UNTIL THE CONFLICT IS RESOLVED.

G-12 EQUIPMENT ANCHOR BOLT SIZES, TYPES, EMBEDMENT AND PATTERNS SHALL BE VERIFIED WITH THE MANUFACTURER. ALL BOLT PATTERNS SHALL BE TEMPLATED TO INSURE ACCURACY OF PLACEMENT.

G-13 STRUCTURAL DRAWINGS SHALL BE USED IN COORDINATION WITH THE DRAWINGS OF ALL OTHER DISCIPLINES AND MANUFACTURER'S SHOP DRAWINGS.

G-14 STRUCTURES HAVE BEEN DESIGNED FOR OPERATIONAL LOADS ON THE COMPLETED STRUCTURE. DURING CONSTRUCTION, THE STRUCTURES SHALL BE PROTECTED BY BRACING AND TEMPORARY SUPPORTS WHEREVER EXCESSIVE CONSTRUCTION LOADS MAY OCCUR. OVERSTRESSING OF ANY STRUCTURAL ELEMENT IS PROHIBITED.

G-15 IF CONTRACTOR DESIRES TO TEMPORARILY PLACE OR MOVE LOADS ON OR ADJACENT TO EXISTING STRUCTURES OR UTILITIES DURING CONSTRUCTION PROCESS, CONTRACTOR IS EXCLUSIVELY RESPONSIBLE FOR MAINTAINING STRUCTURAL INTEGRITY AND AVOIDING OVERSTRESSING AND DAMAGING EXISTING STRUCTURES AND UTILITIES. CONTRACTOR SHALL SUBMIT STRUCTURAL CALCULATIONS AND DRAWINGS VERIFYING PROPOSED CONSTRUCTION INCLUDING APPLICATION OF TEMPORARY CONSTRUCTION LOADS WILL NOT OVERSTRESS OR DAMAGE EXISTING STRUCTURES AND UTILITIES. DRAWINGS AND CALCULATIONS SHALL BE SEALED BY A PROFESSIONAL ENGINEER CURRENTLY REGISTERED IN THE COMMONWEALTH OF VIRGINIA.

G-16 NO BACKFILL SHALL BE PLACED AGAINST ANY SUBSTRUCTURE WALLS UNLESS ALL ADJACENT SUPPORTING ELEMENTS HAVE ACHIEVED DESIGN STRENGTH, OR WALLS HAVE BEEN PROPERLY BRACED, AND IN ANY CASE NOT SOONER THAN 28 DAYS AFTER THE PLACING OF CONCRETE UNLESS APPROVED BY THE ENGINEER. SUPPORTING ELEMENTS SHALL INCLUDE ADJACENT WALLS, SLABS, BEAMS AND COLUMNS.

G-17 LEAKAGE TESTING OF HYDRAULIC STRUCTURES SHALL NOT BEGIN UNTIL ALL STRUCTURAL ELEMENTS HAVE REACHED THE SPECIFIED MINIMUM CONCRETE STRENGTH. BACKFILL SHALL NOT BE PLACED AROUND ANY HYDRAULIC STRUCTURE UNTIL THE LEAKAGE TEST HAS BEEN COMPLETED UNLESS APPROVED BY THE ENGINEER.

DEMOLITION

D-1 DETAILED CONSTRUCTION AND DEMOLITION PLAN SHALL BE SUBMITTED TO THE ENGINEER AND APPROVED BY THE ENGINEER AND OWNER PRIOR TO BEGINNING CONSTRUCTION. ANY SHUTDOWNS SHALL BE SUBMITTED TO, COORDINATED WITH, AND APPROVED BY THE OWNER. ONCE APPROVED, CONTRACTOR SHALL PROVIDE A MINIMUM OF THREE (3) WEEKS NOTICE TO OWNER PRIOR TO SHUTDOWN.

STRUCTURAL METALS

M-1 DETAIL, FABRICATE, AND ERECT STRUCTURAL STEEL IN ACCORDANCE WITH AISC SPECIFICATION FOR STRUCTURAL STEEL BUILDINGS, ALLOWABLE STRESS DESIGN AND PLASTIC DESIGN, LATEST EDITION.

M-2 STEEL MATERIAL:

A)	STRUCTURAL HSS:	ASTM A500, GRADE C (46/50 KSI) OR A1085 (50 KSI)
B)	STRUCTURAL PIPE:	ASTM A53, GRADE B (35 KSI)
C)	PLATES, BARS AND ANGLES:	ASTM A36 UNO (36 KSI)
D)	STRUCTURAL W SHAPES:	ASTM A992 (50 KSI)
E)	STRUCTURAL S, M, C & MC SHAPES:	ASTM A36 (36 KSI)
F)	STRUCTURAL HP	ASTM A572 GRADE 50 (50 KSI)
G)	RODS	ASTM F1554 GRADE 36 (36 KSI)

M-3 PROVIDE MINIMUM 3/4" DIAMETER ASTM A325 HIGH STRENGTH BOLTS WITH SNUG TIGHTENED TYPE N CONNECTIONS FOR STRUCTURAL STEEL UNLESS NOTED OTHERWISE. HOLES FOR BOLTS SHALL BE STANDARD SIZE UNLESS NOTED OTHERWISE.

M-4 PROVIDE TYPICAL STEEL BEAM CONNECTIONS FOR A CAPACITY OF NOT LESS THAN THE TOTAL UNIFORM LOAD CAPACITY TABULATED IN THE AISC TABLES FOR ALLOWABLE LOADS OF BEAMS UNLESS NOTED OTHERWISE.

M-5 DO NOT PAINT STEEL SURFACES WHICH ARE TO BE WELDED OR ARE TO BE ENCASED IN CONCRETE.

M-6 ALL STAINLESS STEEL FABRICATIONS EXPOSED TO UNDERWATER SERVICE SHALL BE TYPE 316. ALL OTHER STAINLESS STEEL FABRICATIONS SHALL BE TYPE 304 UNLESS NOTED OTHERWISE.

M-7 ALUMINUM SHALL BE ALLOY 6061-T6 UNLESS NOTED OTHERWISE.

M-8 ALL BOLTS, ANCHOR BOLTS, AND CONCRETE ANCHORS CONNECTING ALUMINUM SHALL BE STAINLESS STEEL TYPE 316 FOR UNDERWATER APPLICATIONS AND TYPE 304 FOR ALL OTHER APPLICATIONS.

M-9 DETAIL, FABRICATE, AND ERECT ALUMINUM IN ACCORDANCE WITH THE LATEST EDITION OF THE ALUMINUM ASSOCIATION ALUMINUM DESIGN MANUAL.

M-10 ALUMINUM SHALL BE ISOLATED FROM CONTACT WITH CONCRETE AND DISSIMILAR METALS.

M-11 ALL GROOVE AND BUTT WELDS SHALL BE FULL PENETRATION.

M-12 FILLET WELD SIZES SHALL NOT BE LESS THAN THE MINIMUM SIZE REQUIRED BY AISC CODE FOR PLATE SIZES TO BE CONNECTED AND SHALL BE APPLIED TO THE ENTIRE JOINT CONTACT LENGTH, AND NOT LESS THAN 3/16".

M-13 BOTTOM SURFACES OF BASE PLATES SHALL BE GROUTED TO ENSURE FULL BEARING CONTACT WITH CONCRETE SLAB.

M-14 WHENEVER ONE MEMBER IS FASTENED TO ANOTHER WITH FASTENINGS (BOLTS, WELDS, ETC.) SET AT A UNIFORM SPACING, THERE SHALL BE A MINIMUM OF TWO FASTENINGS PER PIECE CONNECTED AND THE FIRST AND LAST FASTENINGS SHALL BE LOCATED NOT TO EXCEED 0.25 OF FASTENER SPACING FROM EACH END.

M-15 BOLTED CONNECTIONS FOR STRUCTURAL STEEL SHALL BE ASSEMBLED AND INSPECTED IN ACCORDANCE WITH RCSC (SPECIFICATIONS FOR STRUCTURAL JOINTS USING ASTM A325 OR ASTM A490 BOLTS).

M-16 STRUCTURAL WELDED JOINTS SHALL CONFORM TO THE PROVISIONS OF AWS D1.1, STRUCTURAL WELDING CODE BY AMERICAN WELDING SOCIETY. PROOF OF WELDER CERTIFICATION SHALL BE AVAILABLE AT THE JOB SITE DURING TIMES OF INSPECTION.

M-17 GRATING PANELS SHALL BE CONFINED TO PREVENT MOVEMENT PER STANDARD DETAIL XXXXXX. SOLE USE OF GRATING CLIP ATTACHMENT IS NOT ACCEPTABLE TO PREVENT GRATING MOVEMENT.

FOUNDATIONS

F-1 CONCRETE (CAST-IN-PLACE) NOTES APPLY TO FOUNDATIONS.

F-2 ALLOWABLE SOIL BEARING PRESSURE

STRUCTURE \ PARAMETER	ALLOWABLE SOIL BEARING PRESSURE
ELECTRICAL BUILDING FOUNDATION - PENN AVE	2000 PSF
ELECTRICAL BUILDING FOUNDATION - CONWAY	3000 PSF
WET WELL / VAULT - PENN AVE	2000 PSF
WET WELL / VAULT - CONWAY	2000 PSF

F-3 MINIMUM DEPTH FROM ADJACENT FINISHED GRADE TO BOTTOM OF FOUNDATION = 30 INCHES.

F-4 STRUCTURES ARE DESIGNED FOR THE 100-YEAR FLOOD ELEVATION OF 726.00.

PRECAST CONCRETE

PC-1 PRECAST STRUCTURES SHALL BE DESIGNED BY A PROFESSIONAL ENGINEER REGISTERED IN THE COMMONWEALTH OF VIRGINIA. STRUCTURAL DRAWINGS SHALL INDICATE DESIGN IS IN COMPLIANCE WITH THE VIRGINIA UNIFORM STATEWIDE BUILDING CODE.

NONSTRUCTURAL COMPONENT ANCHORAGE

A-1 ALL ARCHITECTURAL, MECHANICAL, AND ELECTRICAL COMPONENTS SHALL BE DESIGNED AND INSTALLED TO RESIST THE CONTROLLING CONDITION OF OPERATIONAL FORCES OR SEISMIC FORCES IN ACCORDANCE WITH THE GOVERNING BUILDING CODE. SEISMIC FORCES SHALL ALSO BE AS PER ASCE 7. COMPONENT SEISMIC ATTACHMENTS SHALL BE BOLTED, WELDED, OR OTHERWISE POSITIVELY FASTENED WITHOUT CONSIDERATION OF FRICTIONAL RESISTANCE PRODUCED BY THE EFFECTS OF GRAVITY. A CONTINUOUS LOAD PATH OF SUFFICIENT STRENGTH AND STIFFNESS BETWEEN THE COMPONENT AND THE SUPPORTING STRUCTURE SHALL BE PROVIDED. CONNECTIONS FOR BOTH ORTHOGONAL DIRECTIONS (TRANSVERSE AND LONGITUDINAL) SHALL BE DESIGNED BY THE CONTRACTOR'S ENGINEER CURRENTLY REGISTERED IN THE COMMONWEALTH OF VIRGINIA.

A-2 COMPONENT REACTION FORCES AT THE POINT OF ATTACHMENT TO THE STRUCTURE SHALL BE SUBMITTED TO AND COORDINATED WITH THE ENGINEER FOR CONFIRMATION SUPPORTING STRUCTURE CAN WITHSTAND REACTION FORCES.

A-3 CONTRACTOR SHALL PROVIDE SPECIAL SEISMIC CERTIFICATION (SSC) FROM MANUFACTURER OF EQUIPMENT FOR ALL SYSTEMS DEEMED NECESSARY BY SPECIFICATIONS. SPECIAL SEISMIC CERTIFICATION SHALL BE IN COMPLIANCE WITH ASCE 7.

CONCRETE (CAST-IN-PLACE)

C-1 DESIGN OF CONCRETE ELEMENTS INCLUDING WALLS, FORMED SLABS, BEAMS, AND COLUMNS IS IN ACCORDANCE WITH ACI 318 (CODE REQUIREMENTS FOR STRUCTURAL CONCRETE) AND 350 (CODE REQUIREMENTS FOR ENVIRONMENTAL ENGINEERING CONCRETE STRUCTURES).

C-2 FOR CONCRETE MIX DESIGN SEE SPECIFICATION SECTION 03300.

C-3 CONCRETE STRENGTH CLASSES (28-DAY COMPRESSIVE STRENGTH):

A) CLASS A1 CONCRETE (4,500 PSI): NORMAL WEIGHT STRUCTURAL CONCRETE TO BE USED IN ALL STRUCTURES QUALIFYING AS ENVIRONMENTAL CONCRETE STRUCTURES THAT ARE DESIGNED IN ACCORDANCE WITH ACI 350 INCLUDING PUMP STATIONS, TANKS, BASINS, PROCESS STRUCTURES, AND ANY STRUCTURES CONTAINING FLUID OR PROCESS CHEMICALS OR OTHER MATERIALS USED IN TREATMENT PROCESS.

B) CLASS A2 CONCRETE (4,000 PSI): NORMAL WEIGHT STRUCTURAL CONCRETE IN ALL STRUCTURES OTHER THAN STRUCTURES QUALIFYING AS ENVIRONMENTAL CONCRETE STRUCTURES AS DESCRIBED ABOVE, AND FOR ALL SIDEWALKS, CURB AND GUTTERS, AND PAVEMENT.

C) CLASS B CONCRETE (3,000 PSI): NORMAL WEIGHT STRUCTURAL CONCRETE USED FOR DUCT BANK ENCASEMENTS, CATCH BASINS, FENCE AND GUARD POST EMBEDMENT, CONCRETE FILL, AND OTHER AREAS WHERE SPECIFICALLY NOTED ON CONTRACT DRAWINGS.

C-4 ALL BAR REINFORCING SHALL CONFORM TO ASTM A615, GRADE 60. WHERE REINFORCEMENT IS TO BE WELDED IN ACCORDANCE WITH AWS D1.4, ASTM A706 GRADE 60 SHALL BE USED. WELDED WIRE FABRIC SHALL CONFORM TO ASTM A185.

C-5 CONCRETE COVER FOR REINFORCING (UNLESS NOTED OTHERWISE ON THE DRAWINGS):

A)	CONCRETE DEPOSITED DIRECTLY AGAINST SOIL:	3"
B)	CONCRETE EXPOSED TO WEATHER (#5 OR SMALLER):	1 1/2"
	CONCRETE EXPOSED TO WEATHER (#6 OR LARGER):	2"
C)	SLABS:	1 1/2"
	AT SURFACES CONTACTING FLUID:	2"
D)	BEAMS AND COLUMNS (TO MAIN REINFORCEMENT):	2"
	BEAMS AND COLUMNS (TO COLUMN TIES OR STIRRUPS):	1 1/2"
E)	WALLS 12" OR MORE:	2"
	WALLS LESS THAN 12" (#5 OR SMALLER):	1 1/2"
	WALLS LESS THAN 12" (#6 OR LARGER):	2"
F)	FOR SURFACES EXPOSED TO FLUID IN BEAMS, COLUMNS AND WALLS:	ADD 1/2" TO ABOVE VALUES

C-6 SPLICES SHALL BE CLASS "B" CONFORMING TO THE PROVISIONS OF ACI 318 UNLESS NOTED OTHERWISE. SPLICE LENGTH FOR TWO DIFFERENT SIZED BARS TO BE LAP SPLICED TOGETHER SHALL BE THE LENGTH OF THE LARGER BAR UNLESS NOTED OTHERWISE.

C-7 CONSTRUCTION JOINTS SHALL BE LOCATED AS SHOWN ON THE DRAWINGS. CONSTRUCTION JOINTS NOT SHOWN SHALL BE SUBMITTED BY THE CONTRACTOR FOR THE APPROVAL OF THE ENGINEER PRIOR TO SUBMITTING REBAR SHOP DRAWINGS. VERTICAL CONSTRUCTION JOINTS IN WALLS AND HORIZONTAL JOINTS IN SLABS SHALL BE PROVIDED AT A SPACING NOT GREATER THAN 45 FEET ON CENTER. FOR EXPOSED WALLS WITH FLUID OR EARTH ON THE OPPOSITE SIDE, THE SPACING BETWEEN VERTICAL AND HORIZONTAL JOINTS SHALL BE A MAXIMUM OF 25 FEET.

C-8 WHERE HORIZONTAL CONSTRUCTION JOINTS, LOCATED ABOVE THE FOUNDATION SLAB, EXTEND BEYOND WHERE NEEDED, THEY SHALL BE TERMINATED AT A VERTICAL CONSTRUCTION JOINT APPROVED BY THE ENGINEER.

C-9 ALL JOINTS WHICH ARE IN MEMBERS IN CONTACT WITH LIQUID OR BELOW GRADE SHALL HAVE A WATERSTOP. CONSTRUCTION JOINTS SHALL HAVE A 6" PVC RIBBED WATERSTOP. EXPANSION JOINTS SHALL HAVE A 9" PVC CENTER BULB RIBBED WATERSTOP. IN VERTICAL JOINTS, WATERSTOPS SHALL TERMINATE NO LESS THAN 18" ABOVE THE MAXIMUM WATER SURFACE OR 18" ABOVE GRADE, WHICHEVER IS HIGHER.

C-10 ALL EXPOSED CORNERS SHALL HAVE A 3/4" CHAMFER.

C-11 EQUIPMENT SUPPORTS, ANCHORAGES, OPENINGS, RECESSES AND REVEALS NOT SHOWN ON THE STRUCTURAL DRAWINGS BUT REQUIRED BY OTHER CONTRACT DOCUMENTS, SHALL BE PROVIDED FOR PRIOR TO PLACING CONCRETE.

C-12 REINFORCING BARS AND ACCESSORIES SHALL NOT BE IN CONTACT WITH ANY METAL PIPE, PIPE FLANGE, METAL CONDUIT, OR OTHER METAL PARTS EMBEDDED IN CONCRETE. A MINIMUM CLEARANCE OF 2" SHALL BE PROVIDED.

C-13 DOWELS, ANCHOR BOLTS, PIPES, WATERSTOPS AND OTHER EMBEDDED ITEMS SHALL BE HELD SECURELY IN POSITION WHILE CONCRETE IS BEING PLACED.

C-14 CONDUITS AND OTHER SIMILAR ITEMS EMBEDDED IN OR PENETRATING THROUGH CONCRETE SHALL BE SPACED ON CENTER NOT LESS THAN 3 TIMES THEIR OUTSIDE DIMENSION, BUT NOT LESS THAN 2 1/2" CLEAR. WHEN SUCH ITEMS ARE EMBEDDED IN WALLS OR SLABS, THEY SHALL NOT OCCUPY MORE THAN 1/3 OF THE MEMBER THICKNESS.

C-15 AT ALL TYPICAL CURBS, EQUIPMENT PADS, AND PIPE SUPPORT PIERS, REINFORCING DOWELS SHOWN MAY BE REPLACED WITH MATCHING DOWELS SET IN EPOXY IN DRILLED HOLES AS SPECIFIED. DOWELS LOCATED CLOSER THAN 3" FROM ANY EDGE OF CONCRETE SHALL NOT BE REPLACED WITH DRILLED DOWELS.

C-16 DRILLED ADHESIVE DOWELS AND CONCRETE ANCHORS (WHERE DOWELS OR ANCHORS ARE SHOWN TO BE PLACED INTO HARDENED CONCRETE):

A) THE HOLE DIAMETER SHALL BE NO LARGER THAN 1/8" GREATER THAN THE DIAMETER OF THE REINFORCING BAR AT THE DEFORMATIONS FOR DOWELS. THE HOLE DIAMETER SHALL BE IN ACCORDANCE WITH THE MANUFACTURER'S INSTRUCTIONS FOR ANCHORS.
B) THE DEPTH OF EMBEDMENT SHALL BE 12 BAR DIAMETERS, UNLESS NOTED OTHERWISE.
C) ADJUST THE DOWEL OR ANCHOR LOCATIONS AS NEEDED TO AVOID DRILLING THROUGH ANY REINFORCING BARS. IF THE LOCATION NEEDS TO BE MODIFIED, CONTACT THE ENGINEER. CONTRACTOR SHALL USE NON-DESTRUCTIVE MEANS TO FIELD LOCATE REINFORCEMENT PRIOR TO DRILLING HOLES FOR DOWELS OR ANCHORS.

C-17 CLEAR DISTANCE FROM ANCHOR RODS TO ANY CONCRETE EDGE SHALL BE 4" MINIMUM UNLESS NOTED OTHERWISE.

C-18 CONCRETE COMPRESSIVE STRENGTH TESTS SHALL BE AVAILABLE ON THE JOB SITE FOR REVIEW BY THE ENGINEER.

REV	ISSUED FOR	DATE	BY
	PERMITTING SUBMITTAL	10/2019	AMF

PROJECT ENGINEER:	A. FALLON
DESIGNED BY:	C. OHRNBERGER
DRAWN BY:	P. VANGORDEN
CHECKED BY:	C. PHILLIPS
IF THIS BAR DOES NOT MEASURE 1" THEN DRAWING IS NOT TO FULL SCALE	0 1/2" 1"

CONSTRUCTION SET

COMMONWEALTH OF VIRGINIA
CHRISTOPHER T. PHILLIPS
Lic. No.033796
02-04-2020
PROFESSIONAL ENGINEER

Hazen
HAZEN AND SAWYER
4035 RIDGE TOP ROAD, SUITE 400
FAIRFAX, VA 22030

CITY OF WINCHESTER
WINCHESTER, VIRGINIA

PENNSYLVANIA AVENUE AND CONWAY
WASTEWATER PUMP STATIONS REPLACEMENT

GENERAL

STRUCTURAL NOTES

DATE: FEBRUARY 2020
HAZEN NO.: 31294-007/014
CONTRACT NO.:
DRAWING NUMBER: S1

PLOT DATE: 2020/02/03 1:04:48 PM BY: ADARNELL
File: G:\31294-RIC\31294-014\ENGINEERING\CIVIL\GEN\S-1 Saved By ADARNELL Save Date: 2019/11/19 4:55 PM

LIGHTING:

X DENOTES FIXTURE TYPE (TYP.)
SEE SPECIFICATION 16500 FOR FIXTURE SCHEDULE
# DENOTES CIRCUIT NUMBER (TYP.)

RECTANGULAR FIXTURE

LEFT: CEILING MOUNTED FIXTURE
RIGHT: WALL MOUNTED FIXTURE

EMERGENCY WALL-MOUNTED FIXTURE:
LEFT: STANDARD
RIGHT: REMOTE-HEAD

LEFT: CEILING MOUNTED EXIT SIGN
RIGHT: WALL MOUNTED EXIT SIGN
SHADED PORTION DENOTES SIGN FACE

POLE-MOUNTED FIXTURE

PHOTOCELL

LEFT: CEILING MOUNTED OCCUPANCY SENSOR
RIGHT: WALL MOUNTED OCCUPANCY SENSOR
X DENOTES TYPE

RECEPTACLES:

X DENOTES RECEPTACLE TYPE (TYP.):
GFCI DENOTES GROUND FAULT CIRCUIT INTERRUPT
UPS DENOTES UNINTERRUPTIBLE POWER SUPPLY
WPCR DENOTES WEATHERPROOF CORROSION RESISTANT
# DENOTES CIRCUIT NUMBER (TYP.)

RECEPTACLES:
LEFT: SIMPLEX
MIDDLE: DUPLEX
RIGHT: QUADRUPLEX

MULTI-OUTLET RECEPTACLE:
LEFT: SIMPLEX
RIGHT: DUPLEX

OTHER RECEPTACLES:
LEFT: 240 VOLT
RIGHT: SPECIAL PURPOSE

HVAC AND FIRE ALARM

FIRE ALARM CONTROL PANEL

FIRE ALARM ANNUNCIATOR PANEL

FIRE ALARM PULL STATION

FIRE ALARM INDICATOR:
X DENOTES ALERT TYPE (TYP.):
A DENOTES AUDIBLE
V DENOTES VISIBLE (# DENOTES STROBE INTENSITY)

FIRE ALARM INDICATOR MOUNTED
ABOVE A FIRE ALARM PULL
STATION

DUCT DETECTOR

SMOKE DETECTOR:
X DENOTES TYPE:
Z DENOTES IONIZATION
P DENOTES PHOTOELECTRIC
T DENOTES THERMAL

HEAT DETECTOR

THERMOSTAT

AMBIENT TEMPERATURE TRANSMITTER

SWITCHES

WALL SWITCH:
X DENOTES TYPE:
NO SUBSCRIPT DENOTES SINGLE-POLE SWITCH
3 DENOTES 3-WAY SWITCH
4 DENOTES 4-WAY SWITCH
M DENOTES MANUAL MOTOR STARTER
# DENOTES CIRCUIT NUMBER
WPCR DENOTES WEATHERPROOF CORROSION RESISTANT

COMBINATION MOTOR STARTER

DISCONNECT SWITCH

LOCAL CONTROL STATION

ELEMENTARY CONTROL SCHEMATICS

3-POSITION SELECTOR SWITCH:
HOA DENOTES HAND/OFF/AUTO
LOR DENOTES LOCAL/OFF/REMOTE
FOR DENOTES FORWARD/OFF/REVERSE

PUSHBUTTON SWITCHES:
LEFT: N.O.
RIGHT: N.C.
TEXT DENOTES LEGEND PLATE

EMERGENCY STOP MUSHROOM HEAD PUSHBUTTON SWITCH (N.C.):
TEXT DENOTES LEGEND PLATE

PUSHBUTTON SWITCH N.C. WITH LOCK-OUT:
TEXT DENOTES LEGEND PLATE

SELECTOR SWITCH:
LEFT: STANDARD
RIGHT: SPRING-RETURN
TEXT DENOTES LEGEND PLATE

SOLID-STATE OVERLOAD RELAY

THERMAL OVERLOAD RELAY

NOTATION LEGEND:
NO/NC: NORMALLY OPEN/CLOSED
RO/RC: RISE-TO-OPEN/CLOSE
FO/FC: FALL-TO-OPEN/CLOSE
TO/TC: TIME-OPEN/CLOSE

CONTACTS:
TEXT DENOTES COIL ID

SWITCHES:
TEXT DENOTES TAG NUMBER

INDICATOR LIGHT:
LEFT: STANDARD/RIGHT: PUSH-TO-TEST
X DENOTES COLOR

RUN TIME METER

SOLENOID VALVE

MOTOR PROTECTION RELAY

CONTROL POWER TRANSFORMER

MECHANICAL INTERLOCK CONNECTION

MOTOR SPACE HEATER

COIL:
X DENOTES TYPE:
M DENOTES MOTOR STARTER
CR DENOTES CONTROL RELAY
TD DENOTES TIME DELAY RELAY
TR DENOTES TIMER RANGE
TS DENOTES TIMER SETPOINT
PR DENOTES INTERPOSING PILOT RELAY
LC DENOTES LIGHTING CONTACTOR
Y DENOTES REFERENCE LINE NUMBER

EQUIPMENT/DEVICE LOCATION SYMBOLS

LOCATED IN MCC

LOCATED IN STAND-ALONE MOTOR STARTER/CONTROLLER

LOCATED IN FIELD

LOCATED AT PANEL:
X DENOTES PANEL ID:
L DENOTES LOCAL CONTROL STATION

SINGLE-LINE DIAGRAMS

XFMR
kVA
480-120/208V
3P/4W
DRY TRANS

TRANSFORMER

PROTECTIVE RELAY:
NUMBER DENOTES IEEE DEVICE FUNCTION

MOTOR AND TYPICAL ADDITIONAL DEVICES:
TSH: TEMPERATURE SWITCH
MSH: MOTOR SPACE HEATER
CF: COOLING FAN
TE: TEMPERATURE ELEMENT
ME: MOISTURE DETECTOR

INSTRUMENT TAG:
X DENOTES INSTRUMENT TYPE
Y DENOTES INSTRUMENT NUMBER
SEE DRAWING I1 FOR INSTRUMENT ABBREVIATIONS

FUSE

FUSED DISCONNECT SWITCH

DISCONNECT SWITCH

FUSED DISCONNECT SWITCH

LOW-VOLTAGE POWER CIRCUIT BREAKER:
LEFT: FIXED-MOUNT
RIGHT: DRAWOUT
E.O. DENOTES ELECTRICALLY OPERATED
LSIG DENOTES INSTALLED TRIP FUNCTIONS:
L DENOTES LONG-TIME
S DENOTES SHORT-TIME
I DENOTES INSTANTANEOUS
G DENOTES GROUND FAULT
Z DENOTES ZONE-SELECTIVE INTERLOCKING
CTR DENOTES BREAKER-SPECIFIC CT AND RATIOS

MEDIUM-VOLTAGE DRAWOUT POWER CIRCUIT BREAKER:
E.O. DENOTES ELECTRICALLY OPERATED
BATT. DENOTES BATTERY BACKUP POWER

LOW-VOLTAGE MOLDED CASE CIRCUIT BREAKER
LEFT: THERMAL-MAGNETIC TRIP UNIT
RIGHT: ELECTRONIC TRIP UNIT

MOTOR CIRCUIT PROTECTOR

GROUND

CT:
NUMBERS DENOTE CT WINDING RATIO AND CT QUANTITY

GFCT:
NUMBERS DENOTE GFCT WINDING RATIO AND GFCT QUANTITY

PT:
NUMBERS DENOTE PT WINDING VOLTAGES AND PT QUANTITY

DRAW-OUT ELEMENT

LEFT: PANELBOARD
RIGHT: COMBINATION POWER UNIT
X DENOTES PANEL ID

LIGHTNING ARRESTOR

SINGLE-LINE DIAGRAMS, CONT'D.

LEFT: RESISTOR
RIGHT: LINE REACTOR:
#% DENOTES IMPEDANCE

CAPACITOR

SHUNT TRIP

SURGE PROTECTIVE DEVICE

KIRK-KEY INTERLOCK

LEFT: FVNR STARTER:
X DENOTES NEMA SIZE
DP DENOTES DEFINITE PURPOSE CONTACTOR
RIGHT: FVR STARTER

LEFT: VFD WITH LINE REACTOR
MIDDLE: VFD WITH HARMONIC FILTER
RIGHT: VFD WITH LINE REACTOR AND FVNR BYPASS
X DENOTES NEMA SIZE

LEFT: RVSS STARTER
RIGHT: RVSS STARTER WITH FVNR BYPASS
X DENOTES NEMA SIZE

VFD WITH RVSS BYPASS

RVAT STARTER:
X DENOTES NEMA SIZE
#% DENOTES TAP SETTING

SINGLE-LINE DIAGRAMS, CONT'D.

GENERATOR

CONTACTOR-STYLE ATS OR MTS

CONTACTOR-STYLE ATS OR MTS WITH OFF POSITION

CONTACTOR-STYLE ATS OR MTS, SERVICE-ENTRANCE RATED

MCCB-STYLE ATS OR MTS

DRAWOUT CB-STYLE ATS OR MTS

MISC PLAN VIEW SYMBOLS

EQUIPMENT CONNECTION

GROUND RODS:
LEFT: BURIED
RIGHT: IN TESTWELL

DUCTBANK SECTION CUT IDENTIFIER:
DBXX DENOTES DUCTBANK ID
EXX DENOTES DRAWING NUMBER
WHERE SECTION CUT IS LOCATED

DUCTBANK TAG:
X DENOTES DUCTBANK ID

CABLE TRAY TAG:
X DENOTES CABLE TRAY ID
Y DENOTES SCHEDULE REFERENCE

INSTRUMENT TAG:
X DENOTES INSTRUMENT TYPE
# DENOTES INSTRUMENT NUMBER
SEE DRAWING I1 FOR INSTRUMENT ABBREVIATIONS

CONDUIT TAGS:
P DENOTES POWER
C DENOTES CONTROL
I DENOTES INSTRUMENTATION
XXXX DENOTES CONDUIT ID
XXX-XXX DENOTES CONDUIT ID

COMMUNICATIONS

TELEPHONE OR NETWORK DROP

PAGER RECEPTACLE

LEFT: ALARM STROBE
RIGHT: ALARM HORN

PA UNIT

WIRING

CONDUIT HOME RUN

CONDUIT EXPOSED

CONCRETE ENCASED CONDUIT

CONDUIT CONCEALED

FLEXIBLE CONDUIT

CONCRETE ENCASED DUCTBANK

LEFT: CONDUIT RISE (TURN UP)
RIGHT: CONDUIT DROP (TURN DOWN)

REV	ISSUED FOR	DATE	BY
	PERMITTING SUBMITTAL	10/2019	AMF

PROJECT ENGINEER:	A. FALLON
DESIGNED BY:	D. WEBER
DRAWN BY:	P. VANGORDEN
CHECKED BY:	E. FRANCOIS
IF THIS BAR DOES NOT MEASURE 1" THEN DRAWING IS NOT TO FULL SCALE	0 1/2" 1"

CONSTRUCTION SET

COMMONWEALTH OF VIRGINIA
EVERSLEY A. FRANCOIS
Lic. No. 57149
02-04-2020
PROFESSIONAL ENGINEER

Hazen

HAZEN AND SAWYER
4035 RIDGE TOP ROAD, SUITE 400
FAIRFAX, VA 22030

CITY OF WINCHESTER
WINCHESTER, VIRGINIA

PENNSYLVANIA AVENUE AND CONWAY
WASTEWATER PUMP STATIONS REPLACEMENT

ELECTRICAL
SYMBOLS AND ABBREVIATIONS

DATE: FEBRUARY 2020
HAZEN NO.: 31294-007/014
CONTRACT NO.:
DRAWING NUMBER: E1

PLOT DATE: 2020/02/03 1:13:36 PM BY: ADAMELL
File: G:\31294-RC\31294-014\ENGINEERING\CIVIL\ELEC\E-1 Saved By DWEBER Save Date: 2019/05/24 9:31 AM

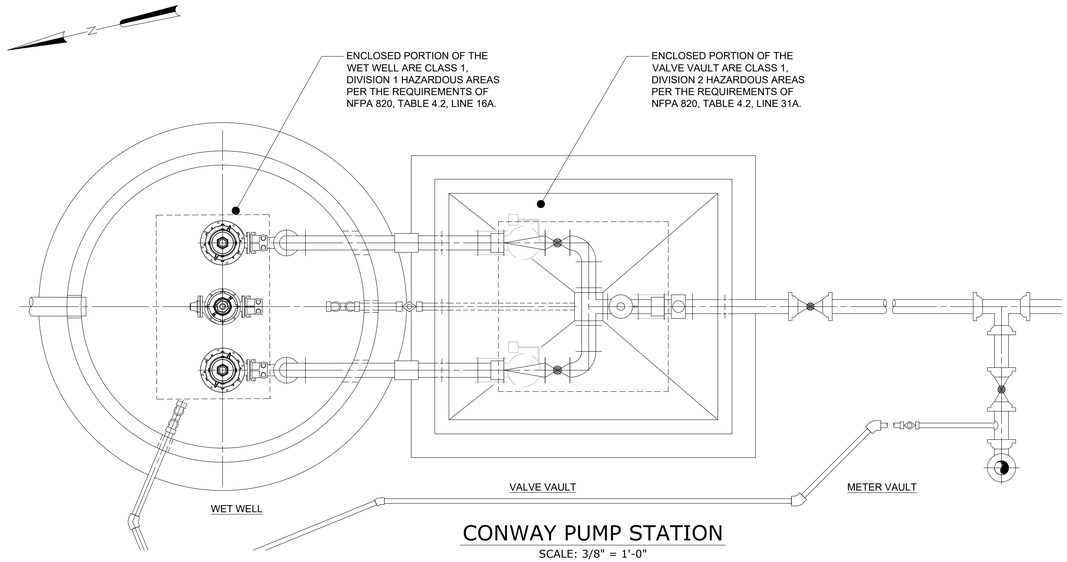

CONWAY PUMP STATION

SCALE: 3/8" = 1'-0"

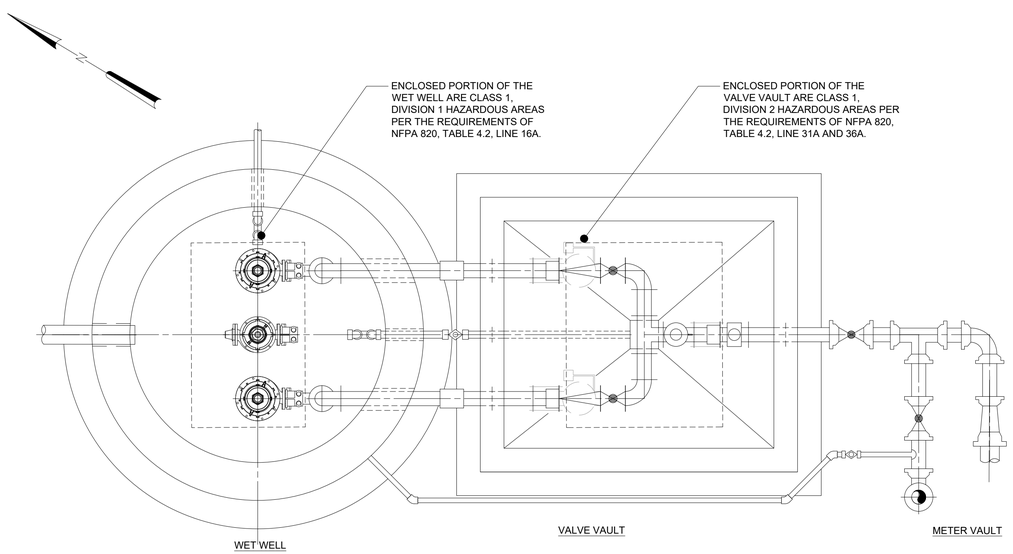

PENNSYLVANIA AVE PUMP STATION

SCALE: 3/8" = 1'-0"

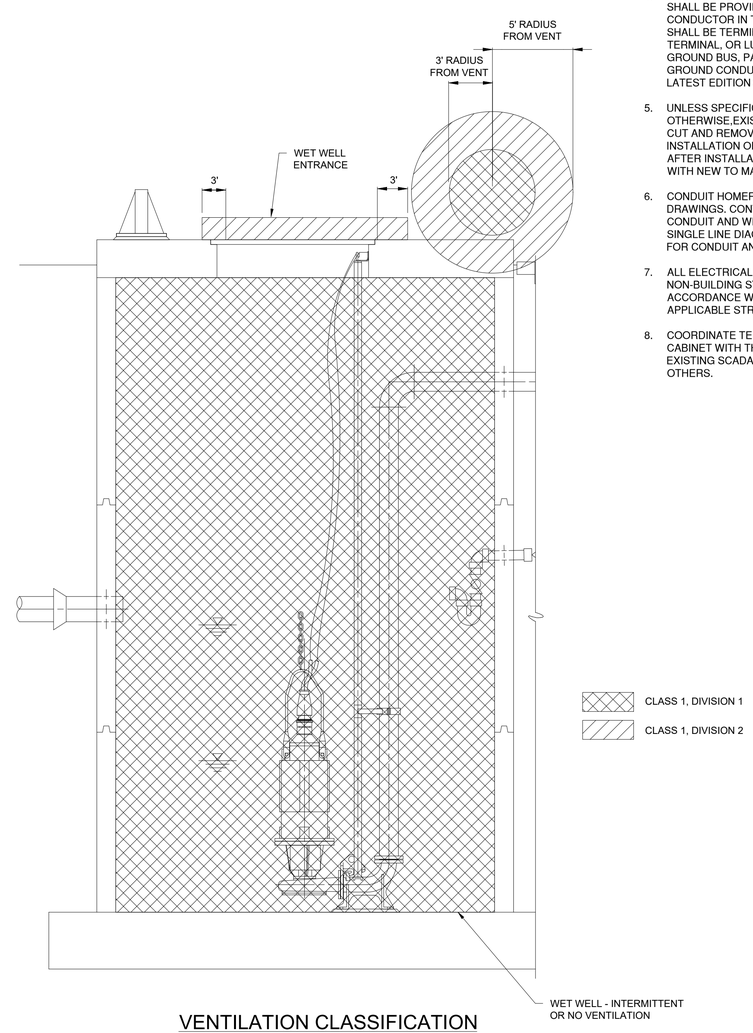

VENTILATION CLASSIFICATION

NOT TO SCALE

GENERAL NOTES:

1. ALL WORK WITHIN HAZARDOUS AREAS SHALL BE PERFORMED PER THE REQUIREMENTS OF ARTICLE 500 AND OTHER RELEVANT SECTIONS OF THE NATIONAL ELECTRICAL CODE.
2. UNLESS OTHERWISE SPECIFIED OR NOTED, ALL WALL MOUNTED ELECTRICAL PANELS, ENCLOSURES, AND SIMILAR EQUIPMENT SHALL BE MOUNTED 6'-6" (MAX) FROM THE TOP OF THE PANEL TO FINISHED FLOOR OR GRADE.
3. UNLESS OTHERWISE NOTED, ALL LIGHTING SWITCHES, CONTROL SWITCHES, AND SIMILAR EQUIPMENT SHALL BE MOUNTED WITH THEIR CENTERLINE APPROXIMATELY 4'-0" ABOVE FINISHED FLOOR, SLAB, OR GRADE. THERMOSTATS SHALL BE MOUNTED 4'-4" ABOVE FINISHED FLOOR.
4. A SEPARATE EQUIPMENT GROUNDING CONDUCTOR SHALL BE PROVIDED FOR EACH CIRCUIT (SEPARATE CONDUCTOR IN THE CONDUIT). THE CONDUCTOR SHALL BE TERMINATED AT THE PROPER DEVICE, TERMINAL, OR LUG AT THE POWER SOURCE (MCC GROUND BUS, PANELBOARD GROUND BUS, ETC.). GROUND CONDUCTOR SIZE SHALL BE PER THE LATEST EDITION OF THE NEC.
5. UNLESS SPECIFICALLY STATED OTHERWISE,EXISTING PAVEMENT SHALL BE SAW CUT AND REMOVED TO ALLOW FOR THE INSTALLATION OF NEW ELECTRICAL DUCTBANKS. AFTER INSTALLATION, REPLACE THE PAVEMENT WITH NEW TO MATCH ORIGINAL CONDITIONS.
6. CONDUIT HOMERUNS ARE NOT SHOWN ON THE DRAWINGS. CONTRACTOR SHALL REFER TO THE CONDUIT AND WIRE SCHEDULE, RISER DIAGRAMS, SINGLE LINE DIAGRAMS, AND OTHER DRAWINGS FOR CONDUIT AND WIRE REQUIREMENTS.
7. ALL ELECTRICAL COMPONENTS, SYSTEMS, AND NON-BUILDING STRUCTURES SHALL BE DESIGNED IN ACCORDANCE WITH THE REQUIREMENTS OF THE APPLICABLE STRUCTURAL CODES.
8. COORDINATE TERMINATION POINTS IN SCADA PLC CABINET WITH THE OWNER. MODIFICATIONS TO THE EXISTING SCADA SYSTEM CONFIGURATION BY OTHERS.

REV	ISSUED FOR	DATE	BY
	PERMITTING SUBMITTAL	10/2019	AMF

PROJECT ENGINEER: A. FALLON
DESIGNED BY: D. WEBER
DRAWN BY: P. VANGORDEN
CHECKED BY: E. FRANCOIS

IF THIS BAR DOES NOT MEASURE 1" THEN DRAWING IS NOT TO FULL SCALE (0 1/2" 1")

CONSTRUCTION SET

COMMONWEALTH OF VIRGINIA
EVERSLEY A. FRANCOIS
Lic. No. 57149
02-04-2020
PROFESSIONAL ENGINEER

Hazen

HAZEN AND SAWYER
4035 RIDGE TOP ROAD, SUITE 400
FAIRFAX, VA 22030

CITY OF WINCHESTER
WINCHESTER, VIRGINIA

PENNSYLVANIA AVENUE AND CONWAY
WASTEWATER PUMP STATIONS REPLACEMENT

ELECTRICAL
HAZARDOUS AREA LIMITS
AND NOTES

DATE: FEBRUARY 2020
HAZEN NO.: 31294-007/014
CONTRACT NO.:
DRAWING NUMBER: E2

PLOT DATE: 2020/02/03 1:14:04 PM BY: AKARNELL
File: Q:\31294-RC\31294-014\ENGINEERING\CIVIL\ELEC\E-2 Saved By MBRICATO Save Date: 2019/10/25 3:47 PM

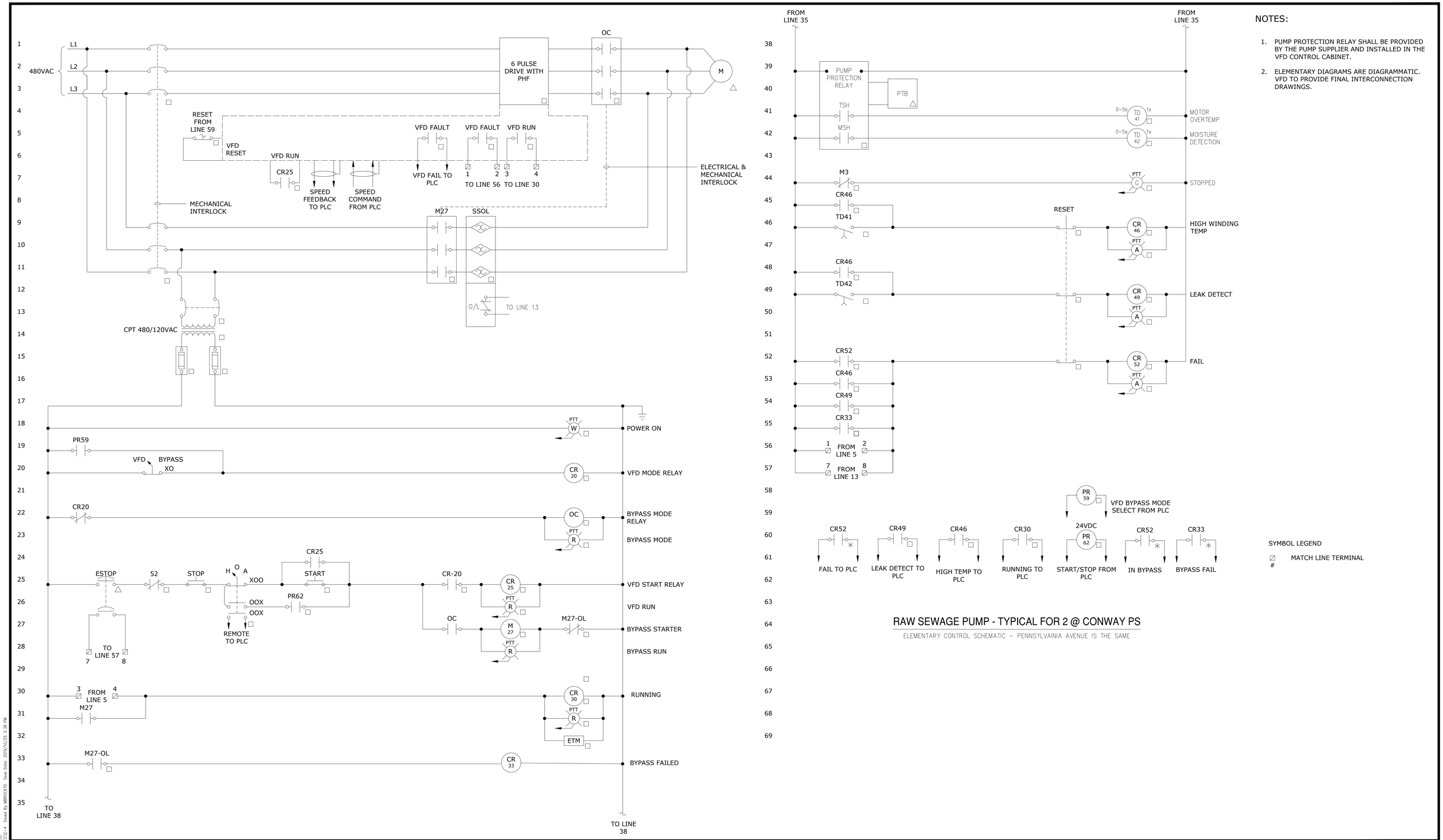

NOTES:

1. PUMP PROTECTION RELAY SHALL BE PROVIDED BY THE PUMP SUPPLIER AND INSTALLED IN THE VFD CONTROL CABINET.
2. ELEMENTARY DIAGRAMS ARE DIAGRAMMATIC. VFD TO PROVIDE FINAL INTERCONNECTION DRAWINGS.

RAW SEWAGE PUMP - TYPICAL FOR 2 @ CONWAY PS

ELEMENTARY CONTROL SCHEMATIC – PENNSYLVAINIA AVENUE IS THE SAME

REV	ISSUED FOR	DATE	BY
	PERMITTING SUBMITTAL	10/2019	AMF

PROJECT ENGINEER:	A. FALLON
DESIGNED BY:	D. WEBER
DRAWN BY:	D. WEBER
CHECKED BY:	E. FRANCIOS

IF THIS BAR DOES NOT MEASURE 1" THEN DRAWING IS NOT TO FULL SCALE (0 1/2" 1")

CONSTRUCTION SET

COMMONWEALTH OF VIRGINIA — EVERSLEY A. FRANCIOS — Lic. No.57149 — 02-04-2020 — PROFESSIONAL ENGINEER

Hazen

HAZEN AND SAWYER
4035 RIDGE TOP ROAD, SUITE 400
FAIRFAX, VA 22030

CITY OF WINCHESTER
WINCHESTER, VIRGINIA

PENNSYLVANIA AVENUE AND CONWAY
WASTEWATER PUMP STATIONS REPLACEMENT

ELECTRICAL
ELEMENTARY DRAWINGS 1

DATE: FEBRUARY 2020
HAZEN NO.: 31294-007/014
CONTRACT NO.:
DRAWING NUMBER: E3

PLOT DATE: 2020/02/03 1:14:27 PM BY: AJARNELL
File: Q:\31294-RC\31294-014\ENGINEERING\CIVIL\ELEC\E-4 Saved By MBRICATO Save Date: 2019/10/25 3:38 PM

NOTES:

1. ELEMENTARY DIAGRAMS ARE DIAGRAMMATIC. VFD TO PROVIDE FINAL INTERCONNECTION DRAWINGS.

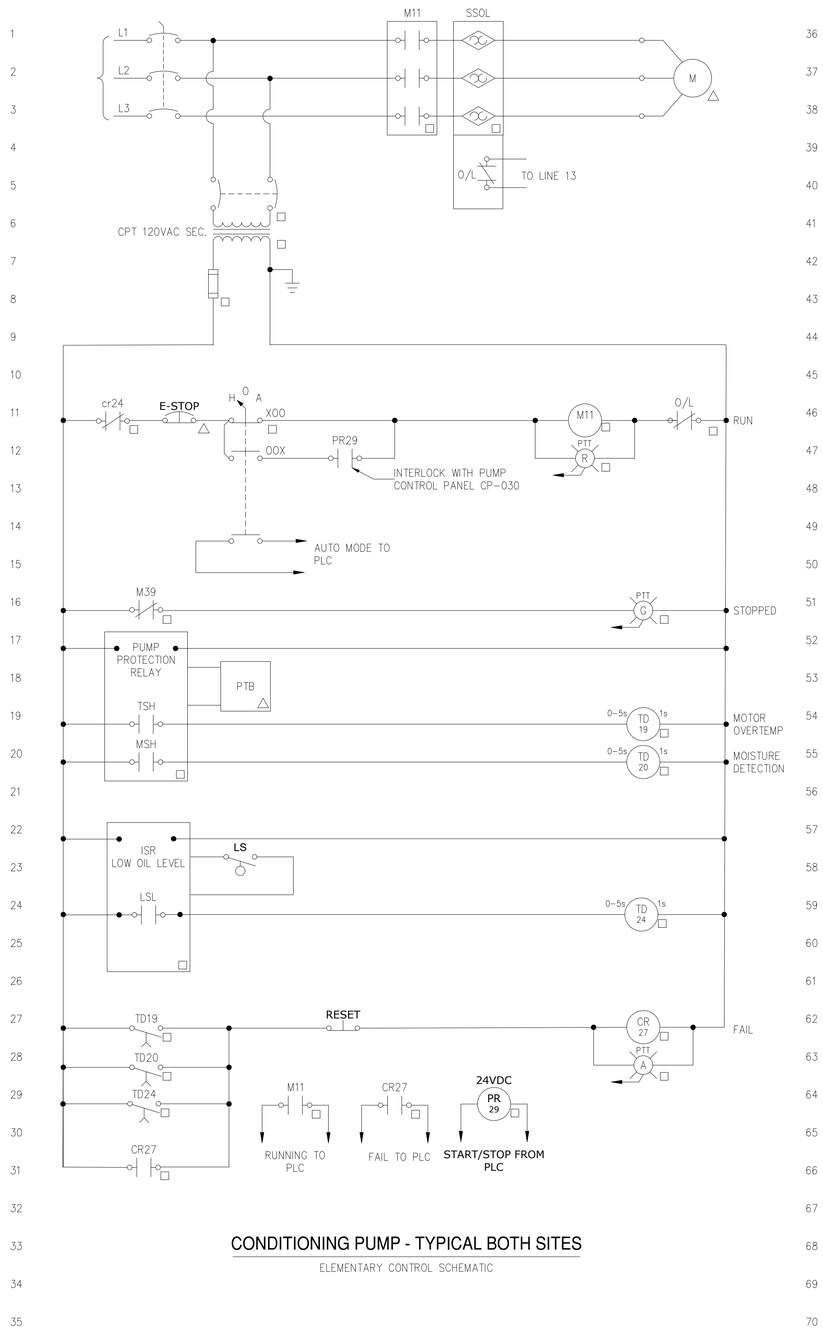

CONDITIONING PUMP - TYPICAL BOTH SITES

ELEMENTARY CONTROL SCHEMATIC

REV	ISSUED FOR	DATE	BY
	PERMITTING SUBMITTAL	10/2019	AMF

PROJECT ENGINEER:	A. FALLON
DESIGNED BY:	D. WEBER
DRAWN BY:	D. WEBER
CHECKED BY:	E. FRANCOIS
IF THIS BAR DOES NOT MEASURE 1" THEN DRAWING IS NOT TO FULL SCALE	0 1/2" 1"

CONSTRUCTION SET

COMMONWEALTH OF VIRGINIA
EVERSLEY A. FRANCOIS
Lic. No.57149
02-04-2020
PROFESSIONAL ENGINEER

Hazen

HAZEN AND SAWYER
4035 RIDGE TOP ROAD, SUITE 400
FAIRFAX, VA 22030

CITY OF WINCHESTER
WINCHESTER, VIRGINIA

PENNSYLVANIA AVENUE AND CONWAY
WASTEWATER PUMP STATIONS REPLACEMENT

ELECTRICAL
ELEMENTARY DRAWINGS 2

DATE: FEBRUARY 2020
HAZEN NO.: 31294-007/014
CONTRACT NO.:
DRAWING NUMBER: E4

PLOT DATE: 2020/02/03 1:14:47 PM BY: ADURNELL
File: Q:\31294-#\\31294-014\ENGINEERING\CIVIL\CLEVE-5 Saved By MBROCATO Save Date: 2019/10/25 3:38 PM

SYMBOLS

- T / S — THERMOSTAT/SENSOR
- GATE VALVE
- CHECK VALVE
- AUTOMATIC CONTROL VALVE 2-WAY
- AUTOMATIC CONTROL VALVE 3-WAY
- SOLENOID OPERATED VALVE
- GLOBE VALVE
- BALL VALVE
- BUTTERFLY VALVE
- COMBINATION BALANCING COCK & FLOW SENSOR
- TRIPLE DUTY VALVE (STRAIGHT, ANGLE PATTERN)
- PIPING ELBOW, 90 TURNED DOWN
- PIPING ELBOW, 90 TURNED UP
- PIPING TEE, OUTLET TURNED DOWN
- PIPING TEE, OUTLET TURNED UP
- PRESSURE GAGE WITH SHUTOFF COCK (BALL VALVE)
- THERMOMETER
- SUPPLY AIR DUCT SECTION-UP
- SUPPLY AIR DUCT SECTION-DOWN
- RETURN AIR DUCT SECTION-UP
- RETURN AIR DUCT SECTION-DOWN
- EXHAUST AIR DUCT SECTION-UP
- EXHAUST AIR DUCT SECTION-DOWN
- M — MOTORIZED DAMPER
- 2 FD — FIRE DAMPER WITH ACCESS DOOR
  - # HOUR RATED WALL (2 HR. SHOWN)
- 2 FSD — FIRE/SMOKE DAMPER WITH ACCESS DOOR
  - # HOUR RATED WALL (2 HR. SHOWN)
- VD — MANUAL VOLUME DAMPER
- BD — BACKDRAFT DAMPER
- SLOPE — CHANGE OF ELEVATION: RISE (R) OR DROP (D)

ABBREVIATIONS

AD	ACCESS DOOR
AFF	ABOVE FINISHED FLOOR
AFUE	ANNUAL FUEL UTILIZATION EFFICIENCY
AHU	AIR HANDLING UNIT
APD	AIR PRESSURE DROP
ATC	AUTOMATIC TEMPERATURE CONTROL
ATU	AIR TERMINAL UNIT
GB	GRAVITY BACKDRAFT DAMPER
BHP	BRAKE HORSEPOWER
BAD	BOTTOM OF DUCT
BOR	BOTTOM OF REGISTER
BOT	BOTTOM
CB	CIRCUIT BREAKER
CFM	CUBIC FEET OF STANDARD AIR PER MINUTE
CLG	CEILING
DB	DRY BULB
DDC	DIRECT DIGITAL CONTROL
DI	DISCRETE INPUT
DIA, Ø	DIAMETER
DM	DAMPER MOTOR
DN	DOWN
DO	DISCRETE OUTPUT
DX	DIRECT EXPANSION REFRIGERANT
EA	EXHAUST AIR
EAT	ENTERING AIR TEMPERATURE
EDH	ELECTRIC DUCT HEATER
EUH	ELECTRIC UNIT HEATER
EF	EXHAUST FAN
EL/ELEV	ELEVATION
ESP	EXTERNAL STATIC PRESSURE
FA	FREE AREA
FC	FORWARD CURVED OR FAN COIL
FD	FIRE DAMPER WITH ACCESS DOOR
FLA	FULL LOAD AMPS
FPM	FEET PER MINUTE
HG	HOT GAS
HP	HORSEPOWER OR HEAT PUMP
HV	HEATING AND VENTILATING UNIT
IN. WG	INCHES OF WATER GAGE
KW	KILOWATT (1,000 WATTS)
L1	LOUVER (TYPE 1)
LAT	LEAVING AIR TEMPERATURE
LD1	LINEAR DIFFUSER (TYPE 1)
LF	LINEAR FEET
LR	LINEAR RETURN
LWT	LEAVING WATER TEMPERATURE
MAU	MAKEUP AIR UNIT
MBH	1,000 BTU PER HOUR
MCA	MINIMUM CIRCUIT AMPACITY
MD	MOTORIZED DAMPER
MTD	MOUNTED
NC	NORMALLY CLOSED, NOISE CRITERIA
NK	NECK
NO	NORMALLY OPEN
NTS	NOT TO SCALE
AO	OUTSIDE AIR
OAI	OUTSIDE AIR INTAKE
ORP	OXYGEN REDUCTION POTENTIAL
PC	PLUMBING CONTRACTOR
PD	PRESSURE DROP
PH, Ø	PHASE
PPU	POSITIVE PRESSURIZATION UNIT
PROP	PROPELLER
PTAC	PACKAGED TERMINAL AIR CONDITIONING UNIT
PS	PRESSURE SENSOR
RA	RETURN AIR
RH	RELATIVE HUMIDITY
RL	REFRIGERANT LIQUID
RLA	RATED LINE AMPS
RPM	REVOLUTIONS PER MINUTE
SA	SUPPLY AIR
SD	SMOKE DETECTOR
SF	SUPPLY AIR FAN
SHR	SENSIBLE HEAT RATIO
SP	STATIC PRESSURE
SPEC	SPECIFICATION
SS	STAINLESS STEEL
SV	SOLENOID VALVE
TEMP	TEMPERATURE
TF	TRANSFER FAN
TH	TOTAL HEAT
TOD	TOP OF DUCT
TOU	TOP OF UNIT
TOR	TOP OF REGISTER
TSP	TOTAL STATIC PRESSURE
TS	TEMPERATURE SENSOR
TYP	TYPICAL
UH	UNIT HEATER
V	VOLTS
VAV	VARIABLE AIR VOLUME
VD	VOLUME DAMPER
VEL	VELOCITY
VH	HEATING CONTROL VALVE
VC	COOLING CONTROL VALVE
VFD	VARIABLE FREQUENCY DRIVE
VVT	VARIABLE VOLUME AND VARIABLE TEMPERATURE
WPD	WATER PRESSURE DROP
w/	WITH
WB	WET BULB
WC	WATER COLUMN

GENERAL NOTES

1. THE SYMBOLS AND ABBREVIATIONS LIST ON THIS SHEET IS A COMPREHENSIVE STANDARD GUIDE INTENDED FOR GENERAL USE ON ALL PROJECTS. THEREFORE NOT ALL THE SYMBOLS AND ABBREVIATIONS CONTAINED IN THIS LIST ARE NECESSARILY USED ON THIS PARTICULAR PROJECT.
2. ALL DUCT DIMENSIONS ARE CLEAR DIMENSIONS TO INSIDE OF DUCT. DIMENSIONS TO DUCTS FROM FLOOR OR WALL SHALL BE TO THE OUTSIDE OF DUCT/INSULATION. WHERE INTERNAL INSULATION IS REQUIRED THE DUCT SIZE SHALL BE INCREASED TO GIVE CLEAR INSIDE DIMENSIONS AS NOTED ON THE DRAWINGS.
3. EQUIPMENT SIZES AND LOCATIONS ARE APPROXIMATE. ACTUAL DIMENSIONS TO BE DETERMINED BY EQUIPMENT FURNISHED. COORDINATE HVAC WORK WITH THE WORK OF ALL OTHER TRADES.
4. FINAL OPENING DIMENSIONS, CONCRETE PAD SIZES, AND LOCATIONS MUST BE COORDINATED DURING CONSTRUCTION WITH APPROVED EQUIPMENT.
5. FINAL SIZES OF FLOOR OPENINGS, DUCT PLENUMS, TRANSITIONS AND PIPING CONNECTIONS TO ALL EQUIPMENT SHALL BE DETERMINED BY EQUIPMENT FURNISHED.
6. THE DRAWINGS ARE SCHEMATIC IN NATURE AND SHOW INTENDED GENERAL LOCATION OF HVAC EQUIPMENT AND SYSTEMS. NOT ALL OFFSETS AND REQUIRED FITTINGS FOR ACTUAL FIELD INSTALLATION ARE INTENDED TO BE SHOWN FOR INSTALLATION OF SYSTEMS IN THE SPACE AVAILABLE IN CONSIDERATION OF WORK OF OTHER TRADES AND FIELD CONDITIONS. CONTRACTOR SHALL PROVIDE ADDITIONAL OFFSETS IN DUCTWORK AND PIPING AS REQUIRED TO AVOID SUCH INTERFERENCES OR FIELD CONDITIONS AT NO ADDITIONAL COST TO THE ORIGINAL CONTRACT AMOUNT.
7. FIRST FIGURE OF DUCT SIZE INDICATES DIMENSION OF FACE IN VIEW AS SHOWN. IF DUCT IS NOT SHOWN, THE FIRST FIGURE OF DUCT SIZE IS THE WIDTH IN PLAN VIEW.
8. REFER TO ELECTRICAL DRAWINGS OR SPECIFICATIONS FOR INTERLOCKING WIRING REQUIREMENTS.
9. PROVIDE ADEQUATE SUPPORT PER SPECIFICATION SECTIONS 15500 AND 15598. PROVIDE VIBRATION ISOLATION AS REQUIRED FOR EQUIPMENT TO OPERATE WITHOUT OBJECTIONABLE VIBRATION OR NOISE.
10. CONTRACTOR SHALL BE RESPONSIBLE FOR CHECKING ELECTRICAL RATINGS FROM CERTIFIED DRAWINGS OF EQUIPMENT AND SHALL MAKE ANY BRANCH CIRCUIT DISTRIBUTION MODIFICATION REQUIREMENTS WITHOUT ANY ADDITIONAL COST TO OWNER. THE CONTRACTOR SHALL SUBMIT A SCHEDULE OF SUCH CHANGES FOR APPROVAL BY ENGINEER.
11. DUCTWORK SHALL BE CONNECTED TO FRAMED OPENINGS AND, SEALED AIRTIGHT AND WEATHER RESISTANT.
12. THERMOSTATS, SENSORS, AND/OR CONTROL PANEL LOCATIONS SHOWN ARE APPROXIMATE AND SHALL BE COORDINATED TO SUIT FIELD CONDITIONS.
13. INSTALL WALL MOUNTED SENSORS, CONTROLS AND THERMOSTATS 4'-0" AFF UNLESS OTHERWISE NOTED. ALIGN WITH OTHER NEARBY ITEMS SUCH AS LIGHT SWITCHES. DO NOT INSTALL CLOSER THAN 6-INCHES FROM EDGE OF DOOR FRAME OR CORNER OF WALL AS SHOWN ON ARCH PLANS. WHERE CONFLICTS MAY OCCUR WITH ITEMS SUCH AS LIGHT SWITCHES, MOUNT THE SENSOR OR CONTROL DEVICE 4'-6" AFF CENTERED ABOVE THE LIGHT SWITCH.
14. PROVIDE ADEQUATE MEANS OF ACCESS CLEARANCE FOR ALL HVAC/MECHANICAL EQUIPMENT AND SYSTEMS THAT REQUIRE ACCESS FOR PROPER OPERATION, MAINTENANCE AND REPAIR PER RECOMMENDED MANUFACTURER CLEARANCES. PROVIDE ACCESS DOORS WHERE NECESSARY IN FINISHED WALLS OR DRYWALL CEILINGS FOR ACCESS TO VALVES, DAMPERS, OR CONTROL DEVICES.
15. PROVIDE ALL FIRE-STOPPING AND PIPE SLEEVES FOR ALL PIPE AND DUCT PENETRATIONS THRU FIRE RATED BUILDING ASSEMBLIES.
16. FOR ADDITIONAL REQUIREMENTS REFER TO SPECIFICATIONS.
17. CONTRACTOR SHALL COMPLY WITH ALL OSHA REQUIREMENTS.
18. REFER TO DIVISION 15 FOR EQUIPMENT SPECIFICATIONS.
19. AN AIR GAP SHALL BE PROVIDED AT BACKFLOW PREVENTER DISCHARGE AND SHALL BE PIPED TO THE FLOOR DRAIN.

DESIGN PARAMETERS

- AHU(*)-1
  - EQUIPMENT IDENTIFICATION NUMBER
  - BUILDING DESIGNATION WHEN APPLICABLE
  - EQUIPMENT TYPE DESIGNATION
- SR1 — SUPPLY AIR REGISTER
  - SUPPLY AIR REGISTER (TYPE 1)
  - SUPPLY AIR REGISTER (TYPE 2), ETC.
- RR1 — RETURN AIR REGISTER (TYPE 1)
- ER1 — EXHAUST AIR REGISTER (TYPE 1)
- 20X10 SR — 20X10 NECK SIZE, SUPPLY REGISTER (TYPE 1)
- 1000 CFM — 1000 CUBIC FEET PER MINUTE AIRFLOW RATE
- LOUVERED FACE SIZE
- 24X24 CDA — CEILING DIFFUSER (TYPE A)
- 8-300
  - CUBIC FEET PER MINUTE AIRFLOW RATE SETTING (MAX)
  - NECK DIAMETER
- SHADED SECTION OF CEILING DIFFUSER INDICATES INACTIVE PANELS
- 2 — DOOR LOUVER NUMBER INDICATES SIZE SQ FT

DESIGN TEMPERATURE CONDITIONS

OUTSIDE	PUMP STATION
WINTER: 16° F DB SUMMER:95° F DB / 75° F WB	WINTER: 50° F
	SUMMER: 100° F DB
	ELECTRIC ROOM
	WINTER: 50° F
	SUMMER: 100° F DB

OUTSIDE AIR DESIGN CONDITIONS

GRIT/SCREENING/WET WELL - 12 ACH (CONTINUOUS)
VALVE VAULT - 30 ACH (INTERMITTENT)
BATHROOM - 2 ACH (INTERMITTENT), AIR CONDITIONED
ELECTRICAL ROOM - AIR CONDITIONED

CONTROL SYMBOLS

- SD — SMOKE DETECTOR
- TS — TEMPERATURE SENSOR
- H O A — HAND-OFF-AUTO
- FS — FLOW SWITCH
- DP — DIFFERENTIAL PRESSURE SWITCH
- GD — GAS DETECTOR
- MD — MOTOR OPERATED DAMPER
- BD — BACKDRAFT DAMPER
- PANEL LAMP
  - R-RED
  - A-AMBER
  - G-GREEN
  - B-BLUE
  - W-WHITE
- ALARM HORN
- ALARM STROBE LIGHT
- PUSH BUTTON
- TIMER

AIR CONDITIONER

LOCATION	AREA SERVED	AIRFLOW (CFM) RATED	OUTDOOR FAN MOTOR			INSIDE BLOWER MOTOR			POWER			WEIGHT (LBS)	NOTES
			RPM	FLA	HP	RPM	FLA	HP	VOLT	PH	HZ		
PENN AVE	ELECTRICAL	775	1075	1.5	1/5	1075	1.5	1/5	230	1	60	350	
CONWAY	ELECTRICAL	775							230	1	60	350	

NOTES:
1. SEE ELECTRICAL SHEETS FOR LOCATION.
2. AIR CONDITIONING DRAIN SHALL DRAIN VIA GRAVITY.
3. REFRIGERANT PIPING SHALL BE INSULATED PER MANUFACTURES RECOMMENDATIONS AND SECTION 15750.
4. SEAL ALL HVAC WALL PENETRATIONS WATER TIGHT.

REV	ISSUED FOR	DATE	BY
	PERMITTING SUBMITTAL	10/2019	AMF

PROJECT ENGINEER: A. FALLON
DESIGNED BY: R. VAN DYKE
DRAWN BY: P. VANGORDEN
CHECKED BY: J. PETERY
IF THIS BAR DOES NOT MEASURE 1" THEN DRAWING IS NOT TO FULL SCALE — 0 1/2" 1"

CONSTRUCTION SET

COMMONWEALTH OF VIRGINIA — RICHARD A. VAN DYKE — Lic. No. 035634 — 02-04-2020 — PROFESSIONAL ENGINEER

Hazen

HAZEN AND SAWYER
4035 RIDGE TOP ROAD, SUITE 400
FAIRFAX, VA 22030

CITY OF WINCHESTER
WINCHESTER, VIRGINIA

PENNSYLVANIA AVENUE AND CONWAY
WASTEWATER PUMP STATIONS REPLACEMENT

HVAC
SYMBOLS, ABBREVIATIONS,
NOTES AND SCHEDULE

DATE: FEBRUARY 2020
HAZEN NO.: 31294-007/014
CONTRACT NO.:
DRAWING NUMBER: H1

PLOT DATE: 2020/02/03 1:05:09 PM BY: AZARNELL
File: Q:\31294-RC\31294-014\ENGINEERING\CAD\HVAC\H-1 Saved By: AZARNELL Save Date: 2019/11/19 3:04 PM

INSTRUMENT AND FUNCTION SYMBOLS

LOCATION AND ACCESSIBILITY	SHARED DISPLAY/SHARED CONTROL: PRIMARY CHOICE OR BASIC PROCESS CONTROL SYSTEM	SHARED DISPLAY/SHARED CONTROL: ALTERNATE CHOICE OR SAFETY INSTRUMENTED SYSTEM	COMPUTER SYSTEMS AND SOFTWARE	DISCRETE
- LOCATED IN FIELD - NOT PANEL, CABINET, OR CONSOLE MOUNTED - VISIBLE AT FIELD LOCATION - NORMALLY OPERATOR ACCESSIBLE	ABCD 12345	ABCD 12345	ABCD 12345	ABCD 12345
- LOCATED IN OR ON FRONT OF CENTRAL OR MAIN PANEL OR CONSOLE - VISIBLE ON FRONT OF PANEL OR ON VIDEO DISPLAY - NORMALLY OPERATOR ACCESSIBLE AT PANEL FRONT OR CONSOLE	ABCD 12345	ABCD 12345	ABCD 12345	ABCD 12345
- LOCATED IN REAR OF CENTRAL OR MAIN PANEL - LOCATED IN CABINET BEHIND PANEL - NOT VISIBLE ON FRONT OF PANEL OR ON VIDEO DISPLAY - NOT NORMALLY OPERATOR ACCESSIBLE AT PANEL OR CONSOLE	ABCD 12345	ABCD 12345	ABCD 12345	ABCD 12345
- LOCATED IN OR ON FRONT OF SECONDARY OR LOCAL PANEL OR CONSOLE - VISIBLE ON FRONT OF PANEL OR ON VIDEO DISPLAY - NORMALLY OPERATOR ACCESSIBLE AT PANEL FRONT OR CONSOLE	ABCD 12345	ABCD 12345	ABCD 12345	ABCD 12345
- LOCATED IN REAR OF SECONDARY OR LOCAL PANEL - LOCATED IN FIELD CABINET - NOT NORMALLY OPERATOR ACCESSIBLE AT PANEL OR CONSOLE	ABCD 12345	ABCD 12345	ABCD 12345	ABCD 12345

X — SUFFIX (X) TO DIFFERENTIATE BETWEEN INSTRUMENTS AND FUNCTIONS THAT WOULD OTHERWISE HAVE THE SAME IDENTIFICATION.

SINGLE INSTRUMENT OR OTHER COMPONENT HAVING MULTIPLE FUNCTIONS OR SHARING A COMMON HOUSING

(ZZZ) — DESIGNATIONS OF CONTROL FUNCTIONS (ZZZ) ASSOCIATED WITH INSTRUMENT OR OTHER COMPONENTS.

AHC -	AUTO/HOLD/CLOSE	OC -	OPEN/CLOSE
AM -	AUTO/MANUAL	OSC -	OPEN/STOP/CLOSED
CALC -	CALCULATION	POT -	POTENTIOMETER
DEV -	DEVIATION	RL -	RAISE/LOWER
MOA -	MANUAL/OFF/AUTO	RS -	RUN/STOP
HOR -	HAND/OFF/REMOTE	RSL -	RAISE/STOP/LOWER
LOS -	LOCKOUT STOP	SD -	SHUTDOWN
LR -	LOCAL/REMOTE	SEL -	SELECT
LSR -	LOCAL/STOP/REMOTE	SP -	SET POINT
00 -	ON / OFF	SR -	START/RESET
		SS -	STOP/START

* ABCD 12345 — INSTRUMENT WITH COMPUTING OR CONVERTING FUNCTION

* ABCD 12345 — CONTROL SYSTEM COMPUTING FUNCTION

CONVERT

E - VOLTAGE	H - HYDRAULIC
I - CURRENT	O - ELECTROMAGNETIC, SONIC
P - PNEUMATIC	R - RESISTANCE (ELECT.)
A - ANALOG	D - DIGITAL
B - BINARY	

COMPUTE

*					
	Σ	SUMMING	P	PROPORTIONAL	△ DIFFERENCE
	—	SUBTRACTOR	R	DERIVATIVE	> HIGH SELECTING
	X	MULTIPLYING	Σ/n	AVERAGING	< LOW SELECTING
	÷	DIVIDING	∶	RATIO	INTEGRAL
	n √	ROOT EXTRACTION	PID	PID	# COMPLEX FUNCTION

* — ELECTRICAL CONTROL INTERLOCK

— COMPLEX INTERLOCK
= 1, 2, 3, etc.
REFER TO NOTE ON SAME SHEET FOR BRIEF DESCRIPTION

= 1, 2, 3, etc.
REFER TO NOTE ON SAME SHEET FOR BRIEF DESCRIPTION

AND — AND LOGIC

OR — OR LOGIC

ABCD 1234 — PILOT LIGHT

VALVE, GATE, AND ACTUATOR SYMBOLS

GATE VALVE
PLUG VALVE
GLOBE VALVE
BALL VALVE
BUTTERFLY VALVE
BALL CHECK VALVE
SWING CHECK VALVE
CHECK VALVE
3-WAY VALVE
3-WAY BALL VALVE
DIAPHRAGM VALVE
PINCH VALVE
NEEDLE VALVE
SLUICE GATE
STOP/SLIDE GATE
S — SOLENOID ACTUATOR
P — PNEUMATIC ACTUATOR

BACKFLOW PREVENTER
PRESSURE RELIEF VALVE
VACUUM RELIEF VALVE
COMBINATION VACUUM AND PRESSURE RELIEF VALVE
PRESSURE-REDUCING REGULATOR
BACKPRESSURE REGULATOR
V — AIR RELEASE VALVE
M — ROTARY MOTOR
E/H — ELECTROHYDRAULIC ACTUATOR
MANUAL ACTUATOR

PUMP AND EQUIPMENT SYMBOLS

CENTRIFUGAL WET PIT PUMP (OR DRY-PIT SUBMERSIBLE)
BLOWER (CENTRIFUGAL)
GEAR PUMP OR BLOWER (POSITIVE DISPLACEMENT)
CHOPPER PUMP
PISTON PUMP
DIAPHRAGM PUMP
ROTARY LOBE PUMP OR BLOWER (POSITIVE DISPLACEMENT)
METERING PUMP
COMPRESSOR
PROGRESSIVE CAVITY PUMP
VERTICAL PUMP
INLINE GRINDER
CENTRIFUGAL PUMP
SCREW CENTRIFUGAL PUMP
M — MIXER

IDENTIFICATION LETTERS

	FIRST LETTERS: MEASURED OR INITIATING VARIABLE	FIRST LETTERS: VARIABLE MODIFIER	SUCCEEDING LETTERS: READOUT/ PASSIVE FUNCTION	SUCCEEDING LETTERS: OUTPUT/ ACTIVE FUNCTION	SUCCEEDING LETTERS: FUNCTION MODIFIER
A	ANALYSIS		ALARM		
B	BURNER, COMBUSTION		USER'S CHOICE	USER'S CHOICE	USER'S CHOICE
C	CONDUCTIVITY			CONTROL	CLOSE
D	DENSITY (MASS) OR SPECIFIC	DIFFERENCE, DIFFERENTIAL			DEVIATION
E	GRAVITY VOLTAGE (EMF)		SENSOR, PRIMARY ELEMENT		
F	FLOW, FLOW RATE	RATIO			
G	USER'S CHOICE		GLASS, GAUGE, VIEWING DEVICE		
H	HAND				HIGH
I	CURRENT		INDICATE		
J	POWER		SCAN		
K	TIME, SCHEDULE	TIME RATE OF CHANGE		CONTROL STATION	
L	LEVEL		LIGHT		LOW
M	MOISTURE OR HUMIDITY	MOMENTARY			MIDDLE, INTERMEDIATE
N	TORQUE		USER'S CHOICE	USER'S CHOICE	USER'S CHOICE
O	USER'S CHOICE		ORIFICE, RESTRICTION		OPEN
P	PRESSURE		POINT (TEST CONNECTION)		
Q	QUANTITY	INTEGRATE, TOTALIZE	INTEGRATE, TOTALIZE		
R	RADIATION		RECORD		RUN
S	SPEED, FREQUENCY	SAFETY		SWITCH	STOP
T	TEMPERATURE			TRANSMIT	
U	MULTIVARIABLE		MULTIFUNCTION	MULTIFUNCTION	
V	VIBRATION, MECHANICAL ANALYSIS			VALVE, DAMPER, LOUVER	
W	WEIGHT, FORCE		WELL PROBE		
X	UNCLASSIFIED	X-AXIS	ACCESSORY DEVICES, UNCLASSIFIED	UNCLASSIFIED	UNCLASSIFIED
Y	EVENT, STATE, PRESENCE	Y-AXIS		AUXILIARY DEVICES	
Z	POSITION, DIMENSION	Z-AXIS, SAFETY INSTRUMENTED SYSTEM		DRIVER, ACTUATOR, UNCLASSIFIED FINAL CONTROL ELEMENT	

MISCELLANEOUS SYMBOLS

EXPANSION JOINT
QUICK CONNECT
BLIND FLANGE
FLEXIBLE HOSE
CALIBRATION CYLINDER
PULSATION DAMPENER
EXPANSION TANK
HORN
HORN/STROBE
RUPTURE DISK
V — VENT
DIAPHRAGM SEAL
FULL LINE OR TAPPED RING SEAL
D — DRAIN
XXXX-YYYYY — EQUIPMENT OR PANEL TAG
M — MOTOR
FILTER
AIR FILTER
STATIC MIXER
INJECTOR

PRIMARY ELEMENT SYMBOLS

M — MAGNETIC FLOW METER
ΔT — THERMAL MASS FLOW METER
TURBINE OR PROPELLER FLOW METER
VENTURI FLOW METER
AVERAGING PITOT TUBE
FICV — ROTAMETER WITH INTEGRAL VALVE
ABCD 1234 XX — XX:
RF=ADMITTANCE/CAPACITANCE
MAN=MANOMETER
SUBMERSIBLE LEVEL SENSOR
NON-CONTACT RADAR LEVEL SENSOR
FLOAT LEVEL SWITCH
CAPACITANCE LEVEL SENSOR
ULTRASONIC LEVEL SENSOR
GUIDED WAVE RADAR LEVEL SENSOR

ANALYTICAL ABBREVIATIONS

AXX 12345 — ANALYSIS INSTRUMENT

(ZZZ) (ZZZ) = ALK - ALKALINITY
CH4 - METHANE
CL2 - CHLORINE
COMB - COMBUSTIBLE GAS
CON - CONDUCTIVITY
DO - DISSOLVED OXYGEN
IR - INFRARED
H2S - HYDROGEN SULFIDE
LEL - LOWER EXPLOSIVE LIMIT
METH - METHANOL VAPOR
NH3 - AMMONIA
NO3 - NITRATE
O2 - OXYGEN
O3 - OZONE
ORP - OXIDATION/REDUCTION POTENTIAL
PETRO - PETROLEUM VAPOR
PH - HYDROGEN ION CONCENTRATION
PO4 - PHOSPHATE
SO2 - SULFUR DIOXIDE
TH - TOTAL HARDNESS
TSS - TOTAL SUSPENDED SOLIDS
TURB - TURBIDITY
UV - ULTRAVIOLET

GENERAL NOTES

1. SYMBOLS AND NOMENCLATURE ARE BASED ON ANSI/ISA-5.1-2009.
2. REFER TO LEGEND SHEETS OF OTHER DISCIPLINES FOR ADDITIONAL SYMBOLS AND ABBREVIATIONS.
3. REFER TO SPECIFICATIONS FOR ADDITIONAL DETAIL ON CONTROL SYSTEM FUNCTIONAL REQUIREMENTS.
4. INSTRUMENTS AND PANELS DENOTED WITH AN ASTERISK (*) ARE PROVIDED BY OTHER DISCIPLINES. REFER TO THE DRAWINGS AND SPECIFICATIONS OF OTHER DISCIPLINES FOR ADDITIONAL DETAIL.
5. POWER SUPPLIES FOR LOOPS OR SYSTEMS SHALL BE FURNISHED BY THE INSTRUMENTATION SUPPLIER TO MEET THE PARTICULAR CHARACTERISTICS (E.G., VOLTAGE AND CURRENT REQUIREMENTS) OF COMPONENTS IN EACH LOOP OR SYSTEM.

LINE SYMBOLS AND LEGEND

MAJOR PROCESS PIPES OR CHANNELS
SECONDARY PROCESS OR MECHANICAL CONNECTION
AIR SUPPLY OR SIGNAL
ELECTRICAL SIGNAL/ COPPER CABLE
DATA LINK OR INTERNAL SOFTWARE LINK
FO — FIBER OPTIC CABLE
C6 — CAT6 CABLE
PROCESS/SIGNALS NOT CONNECTED (CROSSING)
PROCESS/SIGNALS CONNECTED
TAG / DRAWING — OFF-SHEET CONNECTOR
DISCRETE ELECTRICAL SIGNALS
DISCRETE DIGITAL SIGNALS
ANALOG ELECTRICAL SIGNALS
ANALOG DIGITAL SIGNALS

REFER TO SYSTEM ARCHITECTURE SHEETS FOR LINETYPES REPRESENTING OTHER MEDIA AND PROTOCOLS

REV	ISSUED FOR	DATE	BY
	PERMITTING SUBMITTAL	10/2019	AMF

PROJECT ENGINEER:	A. FALLON
DESIGNED BY:	C. KOLESA
DRAWN BY:	C. KOLESA
CHECKED BY:	D. EDWARDS

IF THIS BAR DOES NOT MEASURE 1" THEN DRAWING IS NOT TO FULL SCALE — 0 1/2" 1"

CONSTRUCTION SET

COMMONWEALTH OF VIRGINIA — DANIEL B. EDWARDS — Lic. No.24960 — 02-04-2020 — PROFESSIONAL ENGINEER

Hazen
HAZEN AND SAWYER
4035 RIDGE TOP ROAD, SUITE 400
FAIRFAX, VA 22030

CITY OF WINCHESTER
WINCHESTER, VIRGINIA

PENNSYLVANIA AVENUE AND CONWAY
WASTEWATER PUMP STATIONS REPLACEMENT

INSTRUMENTATION SYMBOLS AND LEGEND

DATE: FEBRUARY 2020
HAZEN NO.: 31294-007/014
CONTRACT NO.:
DRAWING NUMBER: I1

PLOT DATE: 2020/02/03 1:33:39 PM BY: ADARNELL
File: G:\31294-RIC\31294-007\DESIGN\DRAWINGS\INSTV-1 Saved By ADARNELL Save Date: 2020/02/03 12:50 PM

NOTES:

1. BORINGS FROM APRIL 2019 REPORT OF GEOTECHNICAL EXPLORATION BY TRIAD ENGINEERING. BORING LOCATIONS ARE DESIGNATED AS B-1 AND B-2 ON THIS SHEET.

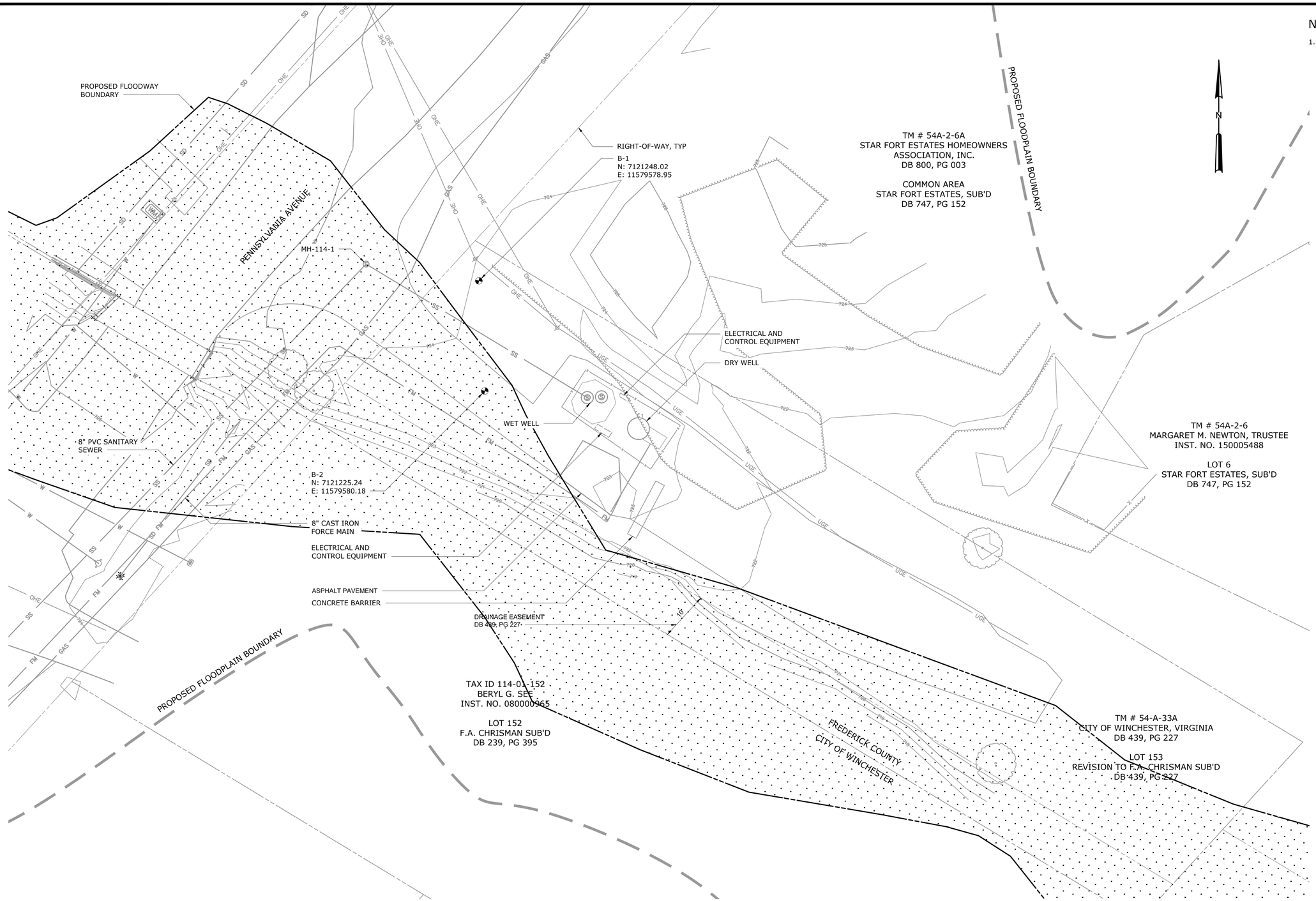

REV	ISSUED FOR	DATE	BY
	PERMITTING SUBMITTAL	10/2019	AMF

PROJECT ENGINEER:	A. FALLON
DESIGNED BY:	S. NASH
DRAWN BY:	S. NASH
CHECKED BY:	J. PETERY
IF THIS BAR DOES NOT MEASURE 1" THEN DRAWING IS NOT TO FULL SCALE	0 1/2" 1"

CONSTRUCTION SET

COMMONWEALTH OF VIRGINIA
JOEL K. PETERY
Lic. No.036763
02-04-2020
PROFESSIONAL ENGINEER

Hazen

HAZEN AND SAWYER
4035 RIDGE TOP ROAD, SUITE 400
FAIRFAX, VA 22030

CITY OF WINCHESTER
WINCHESTER, VIRGINIA

PENNSYLVANIA AVENUE AND CONWAY
WASTEWATER PUMP STATIONS REPLACEMENT

CIVIL
PENNSYLVANIA AVENUE
EXISTING CONDITIONS

DATE:	FEBRUARY 2020
HAZEN NO.:	31294-007/014
CONTRACT NO.:	
DRAWING NUMBER:	C1-P

PLOT DATE: 2020/02/03 1:27:10 PM BY: ADARNELL
File: G:\31294-RC\31294-007\DESIGN\DRAWINGS\CIVIL\C1-P Saved By ADARNELL Save Date: 2019/11/19 1:11 PM

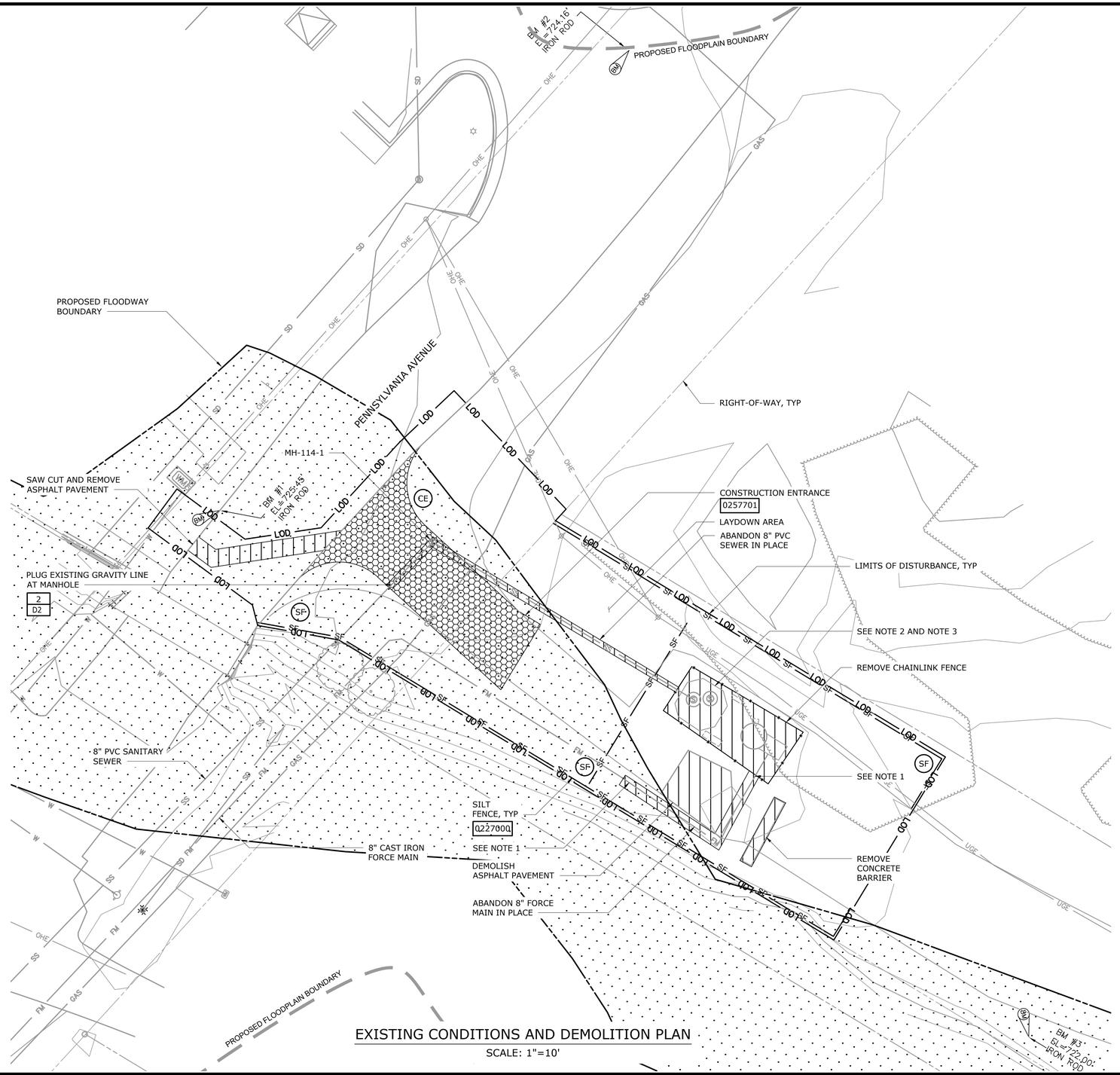

EXISTING CONDITIONS AND DEMOLITION PLAN

SCALE: 1"=10'

NOTES:

1. ALL PIPES DESIGNATED FOR DEMOLITION SHALL BE ABANDONED IN PLACE. PIPES SHALL BE FILLED WITH 3000 PSI CONCRETE GROUT, PLUGGED OR CAPPED AND SEALED AT BOTH ENDS.
2. AFTER PUMP STATION HAS BEEN ACCEPTED BY THE CITY OF WINCHESTER, CONTRACTOR SHALL DEMOLISH EXISTING FACILITIES. WORK SHALL BE IN ACCORDANCE WITH SECTIONS 01520 AND 01540.
3. DRAIN AND DISPOSE CONTENTS OF STRUCTURES IN ACCORDANCE WITH SECTION 01520. REMOVE TOP SLABS AND CONCRETE STRUCTURES TO A DEPTH OF 3-FEET BELOW FINAL GRADE. DEMOLISH EXISTING PIPING AND EQUIPMENT. DRILL 4-INCH HOLES AT 12-INCHES OC IN BOTTOM SLABS FOR DRAINAGE. FILL EXISTING STRUCTURE TO FINAL GRADE WITH #57 STONE.
4. CLEAR AND GRUB AREA WITHIN LIMITS OF DISTURBANCE

SANITARY SEWER STRUCTURE SCHEDULE:

MANHOLE # 114-1:

TOP = 724.56

8" INV IN = 710.30

8" INV OUT = 710.27

PUMP STATION:

TOP = 723.60

8" INV IN = 710.93

BENCHMARK TABLE

BM #	NORTHING	EASTING	ELEVATION
1	7121256.97	11579518.27	725.45
2	7121337.59	11579590.07	724.16
3	7121164.79	11579660.09	722.00

SCALE: 1" = 10'

10 5 0 10'

REV	ISSUED FOR	DATE	BY
	PERMITTING SUBMITTAL	10/2019	AMF

PROJECT ENGINEER: A. FALLON

DESIGNED BY: S.NASH

DRAWN BY: S. NASH

CHECKED BY: J. PETERY

IF THIS BAR DOES NOT MEASURE 1" THEN DRAWING IS NOT TO FULL SCALE 0 1/2" 1"

CONSTRUCTION SET

COMMONWEALTH OF VIRGINIA
JOEL K. PETERY
Lic. No.036763
02-04-2020
PROFESSIONAL ENGINEER

Hazen

HAZEN AND SAWYER
4035 RIDGE TOP ROAD, SUITE 400
FAIRFAX, VA 22030

CITY OF WINCHESTER
WINCHESTER, VIRGINIA

PENNSYLVANIA AVENUE AND CONWAY
WASTEWATER PUMP STATIONS REPLACEMENT

CIVIL
PENNSYLVANIA AVENUE
DEMOLITION AND EROSION CONTROL

DATE: FEBRUARY 2020

HAZEN NO.: 31294-007/014

CONTRACT NO.:

DRAWING NUMBER: C2-P

PLOT DATE: 2020/02/03 1:27:44 PM BY: ADARNELL Save Date: 2019/11/19 10:36 AM
File: Q:\31294-RG\31294-007\DESIGN\DRAWINGS\CIVIL\C2-P Saved By ADARNELL

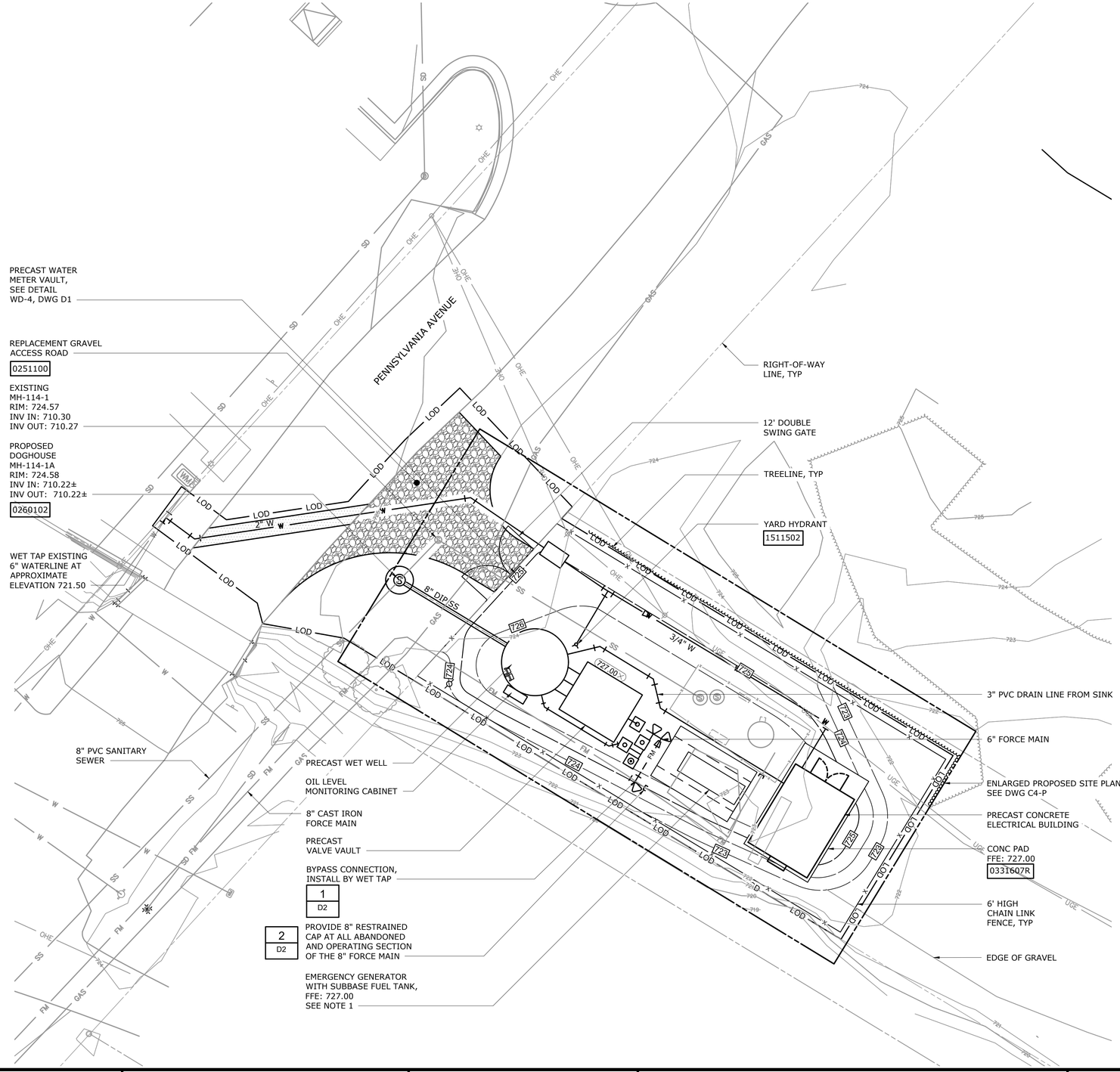

NOTES:

1. THE CONTRACTOR IS RESPONSIBLE FOR MANAGING WASTEWATER FLOW DURING OUTAGES PER SECTION 01520.
2. PROVIDE TAPS AND CORP STOPS TO THE NEW WATER LINE FOR TESTING AND SAMPLING AS REQUIRED BY CONTRACT DOCUMENTS AND CITY OF WINCHESTER STANDARDS.
3. REFER TO ELECTRICAL DRAWINGS FOR CONDUIT LOCATIONS.
4. PROVIDE AN ALUMINUM GENERATOR ACCESS PLATFORM COMPLETE WITH ACCESS LADDERS AND HANDRAILS FROM GRADE TO THE GENERATOR MAINTENANCE DOORS. THE PLATFORM SHALL BE PROVIDED IN ACCORDANCE WITH OSHA AND VIRGINIA UNIFORM STANDARD BUILDING CODE REQUIREMENTS. REFER TO SECTION 16620 FOR ADDITIONAL REQUIREMENTS.
5. CONTRACTOR SHALL PROVIDE 21A STONE, WITH TYPE I SEPARATOR GEOTEXTILE FABRIC UNDERNEATH, WITHIN THE ENTIRE FENCE AREA.
6. MAINTAIN MINIMUM SEPARATION BETWEEN WATER AND SEWER PIPING IN ACCORDANCE WITH CITY OF WINCHESTER STANDARDS.
7. CONTRACTOR SHALL WORK WITHIN THE LIMITS OF DISTURBANCE. IF ADDITIONAL CONSTRUCTION LAYDOWN AREA IS NECESSARY, CONTRACTOR SHALL TAKE PROPER MEASURES TO OBTAIN A TEMPORARY CONSTRUCTION EASEMENT.

SCALE: 1" = 10'

10 5 0 10'

REV	ISSUED FOR	DATE	BY
	PERMITTING SUBMITTAL	10/2019	AMF

PROJECT ENGINEER:	A. FALLON
DESIGNED BY:	S. NASH
DRAWN BY:	S. NASH
CHECKED BY:	J. PETERY

IF THIS BAR DOES NOT MEASURE 1" THEN DRAWING IS NOT TO FULL SCALE (0 1/2" 1")

CONSTRUCTION SET

COMMONWEALTH OF VIRGINIA
JOEL K. PETERY
Lic. No.036763
02-04-2020
PROFESSIONAL ENGINEER

Hazen

HAZEN AND SAWYER
4035 RIDGE TOP ROAD, SUITE 400
FAIRFAX, VA 22030

CITY OF WINCHESTER
WINCHESTER, VIRGINIA

PENNSYLVANIA AVENUE AND CONWAY
WASTEWATER PUMP STATIONS REPLACEMENT

CIVIL
PENNSYLVANIA AVENUE
PROPOSED SITE CONDITIONS

DATE: FEBRUARY 2020
HAZEN NO.: 31294-007/014
CONTRACT NO.:
DRAWING NUMBER: C3-P

PLOT DATE: 2020/02/03 1:28:51 PM BY: ADARNELL Saved By ADARNELL Save Date: 2019/11/19 11:23 AM
File: Q:\31294-RC\31294-007\DESIGN\DRAWINGS\CIVIL\C3-P

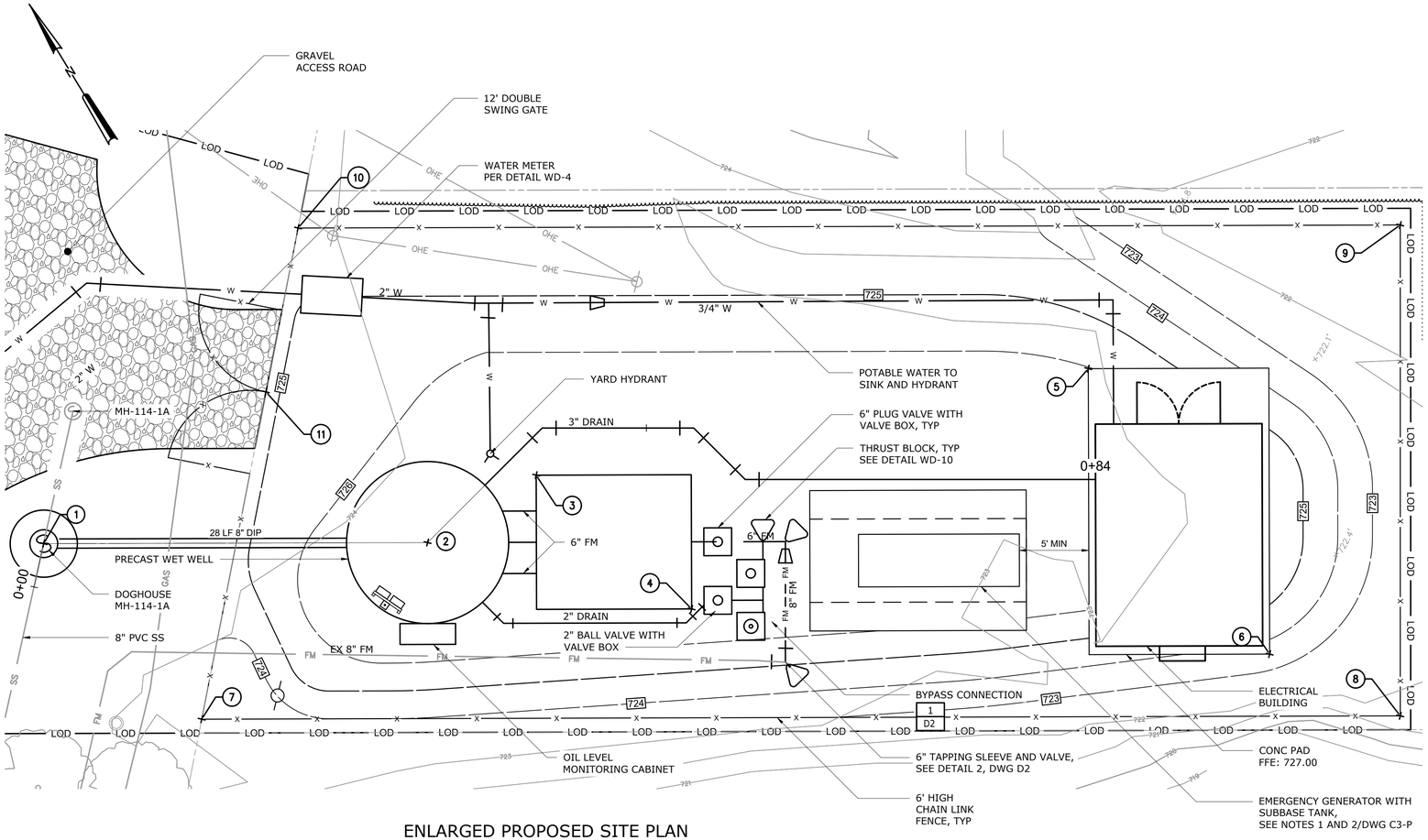

ENLARGED PROPOSED SITE PLAN

SCALE: 1" = 5'

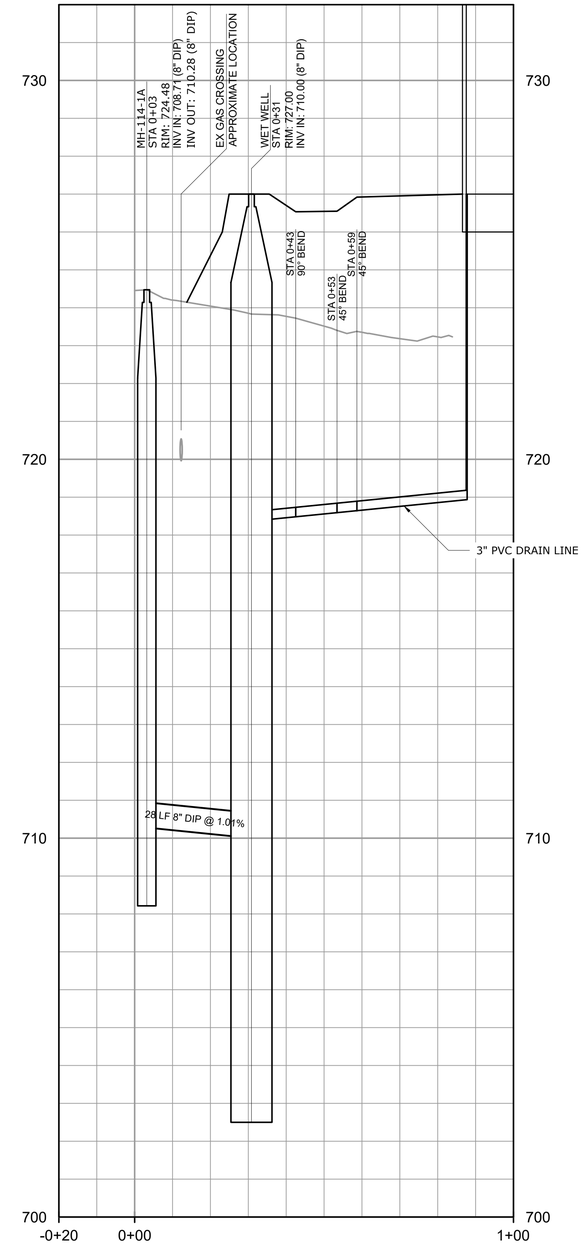

PROFILE

HORIZONTAL SCALE: 1:20
VERTICAL SCALE: 1"=2'

HORIZONTAL SCALE: 1" = 20'
20 10 0 20'
2 1 0 2
VERTICAL SCALE: 1"=2'

STAKING TABLE			
POINT #	NORTHING	EASTING	DESCRIPTION
1	7121244.43	11579548.89	MH-114-1A
2	7121230.11	11579572.52	WET WELL
3	7121230.18	11579581.73	VALVE VAULT
4	7121216.13	11579586.27	VALVE VAULT
5	7121216.04	11579619.66	ELEC BLDG
6	7121191.69	11579620.11	ELEC BLDG
7	7121227.71	11579552.02	FENCE
8	7121182.99	11579625.82	FENCE
9	7121213.18	11579644.23	FENCE
10	7121254.31	11579576.36	FENCE
11	7121245.43	11579568.24	GATE

NOTES:

1. CONTRACTOR SHALL VERIFY LOCATION OF EXISTING UTILITIES AND SHALL PERFORM TEST PITS AS REQUIRED FOR WORK. CONFLICTS SHALL BE BROUGHT TO THE ATTENTION OF OWNER AND ENGINEER. CONTRACTOR SHALL MODIFY WORK AS REQUIRED FOR INSTALLATION OF NEW FACILITIES.

REV	ISSUED FOR	DATE	BY
	PERMITTING SUBMITTAL	10/2019	AMF

PROJECT ENGINEER: A. FALLON
DESIGNED BY: S. NASH
DRAWN BY: S. NASH
CHECKED BY: J. PETERY
IF THIS BAR DOES NOT MEASURE 1" THEN DRAWING IS NOT TO FULL SCALE 0 1/2" 1"

CONSTRUCTION SET

COMMONWEALTH OF VIRGINIA
JOEL K. PETERY
Lic. No.036763
02-04-2020
PROFESSIONAL ENGINEER

Hazen
HAZEN AND SAWYER
4035 RIDGE TOP ROAD, SUITE 400
FAIRFAX, VA 22030

CITY OF WINCHESTER
WINCHESTER, VIRGINIA

PENNSYLVANIA AVENUE AND CONWAY
WASTEWATER PUMP STATIONS REPLACEMENT

CIVIL
PENNSYLVANIA AVENUE
PROPOSED SITE PLAN AND PROFILE I

DATE: FEBRUARY 2020
HAZEN NO.:31294-007/014
CONTRACT NO.:
DRAWING NUMBER: C4-P

PLOT DATE: 2020/02/03 1:29:58 PM BY: ADARNELL
File: G:\31294-RC\31294-007\DESIGN\DRAWINGS\CIVIL\C4-P Saved By ADARNELL Save Date: 2019/11/19 11:02 AM

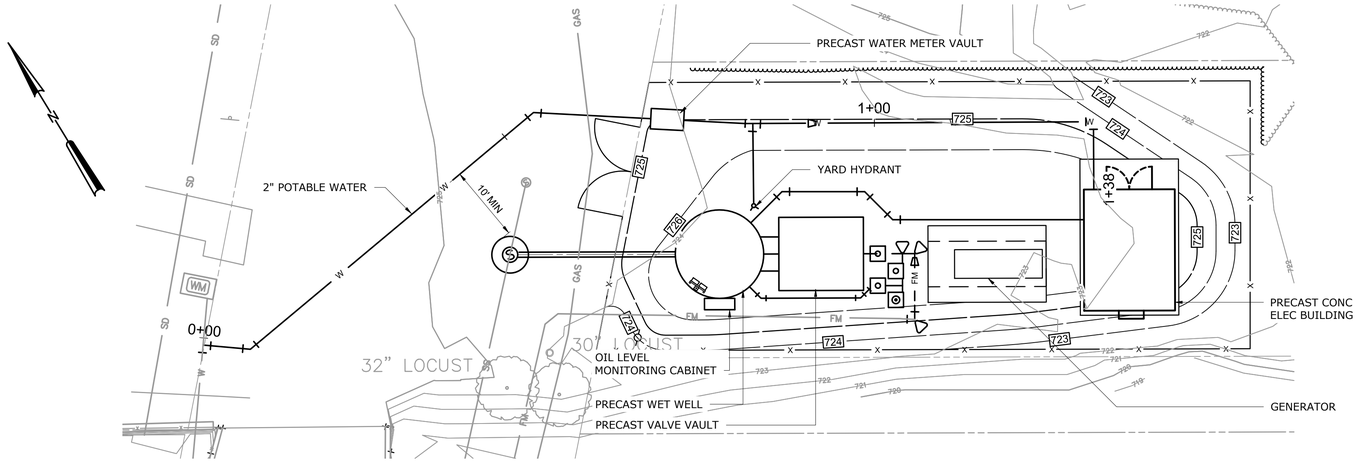

ENLARGED PROPOSED SITE PLAN

SCALE: 1:10

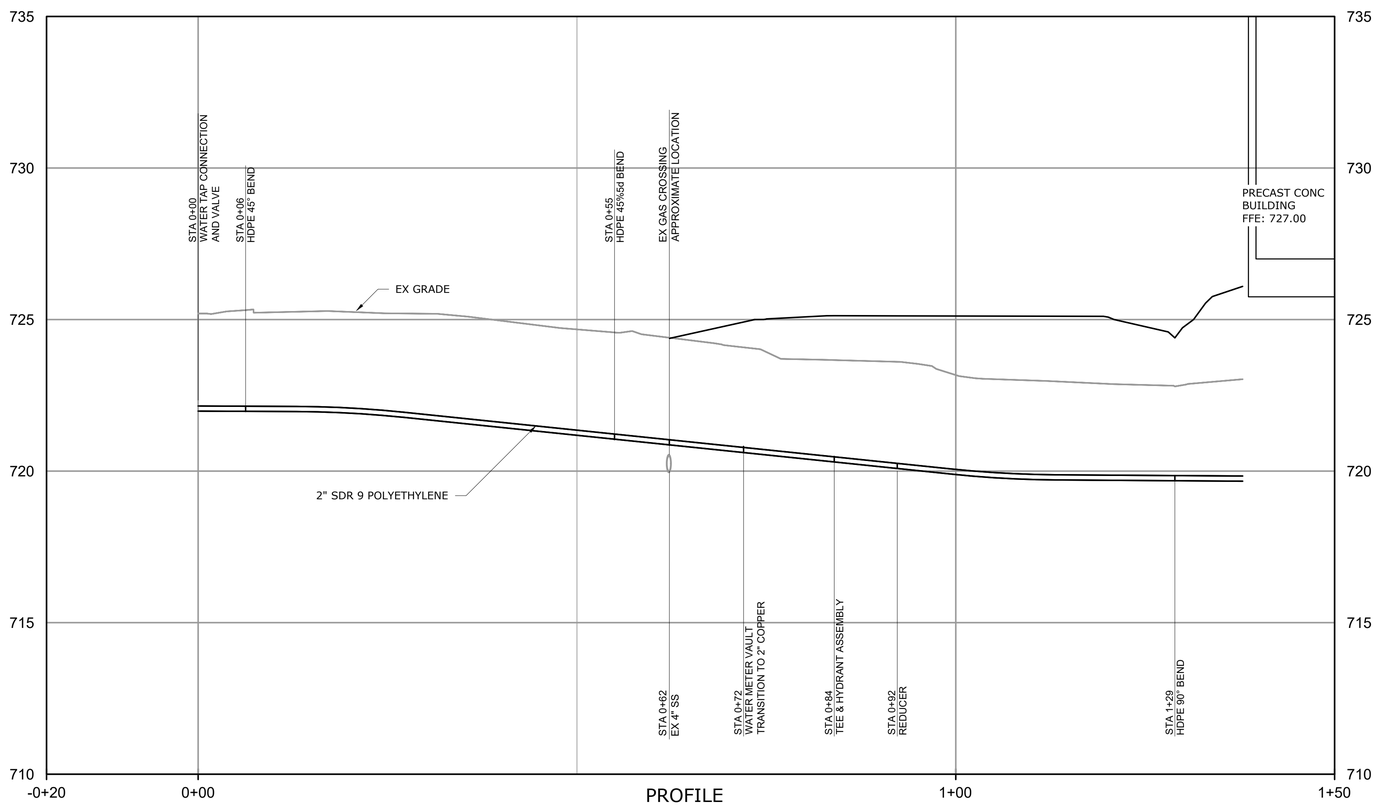

PROFILE

HORIZONTAL SCALE: 1:10
VERTICAL SCALE: 1"=5'

NOTES:

1. CONTRACTOR SHALL VERIFY LOCATION OF EXISTING UTILITIES AND SHALL PERFORM TEST PITS AS REQUIRED FOR WORK. CONFLICTS SHALL BE BROUGHT TO THE ATTENTION OF OWNER AND ENGINEER. CONTRACTOR SHALL MODIFY WORK AS REQUIRED FOR INSTALLATION OF NEW FACILITIES.

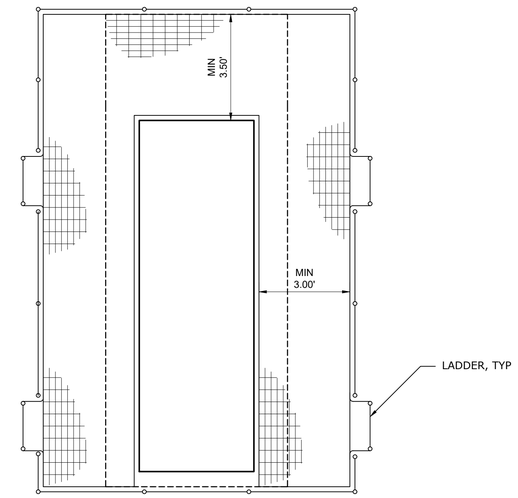

TYPICAL PLAN
N.T.S.

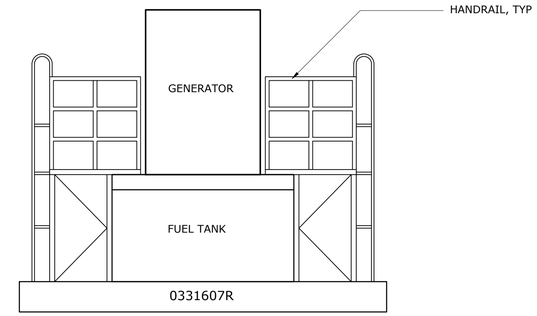

TYPICAL SECTION
N.T.S.

GENERATOR NOTES:

1. DRAWINGS SHOW TYPICAL LAYOUT OF GENERATOR ENCLOSURE. THE ENCLOSURE AND ACCESS PLATFORM SHALL BE IN ACCORDANCE WITH CONTRACT DOCUMENTS, OSHA, AND VA UNIFORM BUILDING CODE. THE CONTRACTOR SHALL MODIFY FOUNDATION TO ACCOMMODATE ACTUAL EQUIPMENT PROVIDED.
2. CONTRACTOR SHALL COORDINATE GENERATOR POWER CONNECTIONS, FUEL TANK INSTRUMENTATION, CONNECTIONS, AND GENERATOR INSTRUMENTATION WITH GENERATOR MANUFACTURER.
3. SEE SECTION 16620 FOR ADDITIONAL REQUIREMENTS.
4. CONTRACTOR SHALL COORDINATE EQUIPMENT PAD SIZE WITH GENERATOR MANUFACTURER. THE PAD SHALL BE MODIFIED AS REQUIRED FOR THE GENERATOR PROVIDED, REFER TO STANDARD DETAIL 0331607R.
5. POSITION GENERATOR TO ALLOW MAINTENANCE ACCESS AND FUEL TANK ACCESS. PAD SHALL EXTEND 1 FOOT BEYOND PERIMETER OF THE GENERATOR ENCLOSURE.
6. PROVIDE AN ALUMINUM GENERATOR ACCESS PLATFORM COMPLETE WITH ACCESS LADDERS AND HANDRAILS FROM GRADE TO THE GENERATOR MAINTENANCE ACCESS. THE PLATFORM SHALL BE PROVIDED IN ACCORDANCE WITH OSHA AND VIRGINIA UNIFORM STANDARD BUILDING CODE REQUIREMENTS.

HORIZONTAL SCALE: 1" = 10'
10 5 0 10'
5 0 5
VERTICAL SCALE: 1"=5'

REV	ISSUED FOR	DATE	BY
	PERMITTING SUBMITTAL	10/2019	AMF

PROJECT ENGINEER:	A. FALLON
DESIGNED BY:	S. NASH
DRAWN BY:	S. NASH
CHECKED BY:	J. PETERY
IF THIS BAR DOES NOT MEASURE 1" THEN DRAWING IS NOT TO FULL SCALE	0 1/2" 1"

CONSTRUCTION SET

COMMONWEALTH OF VIRGINIA
JOEL K. PETERY
Lic. No.036763
02-04-2020
PROFESSIONAL ENGINEER

Hazen

HAZEN AND SAWYER
4035 RIDGE TOP ROAD, SUITE 400
FAIRFAX, VA 22030

CITY OF WINCHESTER
WINCHESTER, VIRGINIA

PENNSYLVANIA AVENUE AND CONWAY
WASTEWATER PUMP STATIONS REPLACEMENT

CIVIL
PENNSYLVANIA AVENUE
PROPOSED SITE PLAN AND PROFILE II

DATE: FEBRUARY 2020
HAZEN NO.: 31294-007/014
CONTRACT NO.:
DRAWING NUMBER: C5-P

PLOT DATE: 2020/02/03 1:30:47 PM BY: AZARNELL Save Date: 2019/11/19 1:23 PM
File: Q:\31294-RC\31294-007\DESIGN\DRAWINGS\CIVIL\C5-P Saved By AZARNELL

NOTES:

1. STAINLESS STEEL GUIDE RAIL BRACKETS SHALL INCLUDE STAINLESS STEEL HOOK FOR PUMP REMOVAL CHAIN. THE PUMP REMOVAL CHAIN SHALL BE EASILY ACCESSIBLE FROM THE HATCH OPENING AND NOT REQUIRE CONFINED SPACE ENTRY.
2. PUMP POWER AND CONTROL CABLES SHALL BE SUPPORTED BY STAINLESS STEEL EYE BOLTS OR FROM GUIDE RAIL BRACKETS. STAINLESS STEEL WIRE STRAIN RELIEF SHALL BE PROVIDED. THE PUMP CABLE CONNECTION SHALL BE EASILY ACCESSIBLE FROM THE HATCH OPENING AND NOT REQUIRE CONFINED SPACE ENTRY.
3. PUMP OIL TUBING SHALL BE SUPPORTED BY STAINLESS STEEL EYE BOLTS OR FROM GUIDE RAIL BRACKETS. STAINLESS STEEL WIRE STRAIN RELIEF SHALL BE PROVIDED. THE OIL TUBING SHALL BE EASILY ACCESSIBLE FROM THE HATCH OPENING AND NOT REQUIRE CONFINED SPACE ENTRY. PUMP OIL RESERVOIR SHALL BE MOUNTED IN A STAINLESS STEEL CABINET ABOVE GRADE IN ACCORDANCE WITH PUMP MANUFACTURES RECOMMENDATIONS.
4. PIPE SUPPORTS NOT SHOWN. PROVIDE PIPE SUPPORTS PER SECTION 15020.
5. THE BOTTOM SLAB OF THE PRECAST CONCRETE VALVE VAULT SHALL BE SLOPED TOWARDS THE VAULT SUMP.
6. DIMENSIONS SHOWN SHALL BE THE MINIMUM INTERIOR DIMENSION FOR PRECAST CONCRETE STRUCTURES. DESIGN OF PRECAST BUILDING INCLUDING SUPPORT OF ALL APPURTENANCES AND INCLUSION OF ALL OPENING SHALL BE THE EXCUSIVE RESPONSIBILITY OF THE PRECAST CONCRETE STRUCTURE MANUFACTURER IN ACCORDANCE WITH SECTION 02604-UTILITY STRUCTURES AND 03400-PRECAST CONCRETE. SUBMIT ERECTION DRAWINGS INCLUDING OPENINGS AND ATTACHMENT OF APPURTENANCES SEALED BY A CURRENTLY REGISTERED PROFESSIONAL ENGINEER IN THE COMMONWEALTH OF VIRGINIA.
7. DAVIT CRANE BASE TO SHALL BE ADMIRAL 3000 AS MANUFACTURED BY THERN, PEDESTAL BASE 5PT30.
8. PRECAST WETWELL AND TOP SLAB SHALL BE DESIGNED ACCOUNTING FOR DAVIT CRANE SECURED INTO THE BASE TO BE HOLDING 1400 LBS AT A HORIZONTAL DISTANCE OF 9 FEET.
9. CONTRACTOR SHALL COORDINATE TOP SLAB REINFORCEMENT AND DRAINAGE WITH APPROVED ACCESS DOOR. ACCESS DOOR DRAIN SHALL BE PIPED TO THE SUMP.
10. VALVE BODY SHALL BE SUPPORTED FROM WALL. AIR RELEASE VALVE DRIP PIPE SHALL BE EXTENDED WITH PVC DOWN TO 12" ABOVE FLOOR OF VAULT. THE DRIP PIPE DIAMETER SHALL BE EQUAL TO OR GREATER THAN T VALVE AIR ORIFICE DIAMETER. THE DRIP PIPE SHALL BE OPEN TO THE ATMOSPHERE.

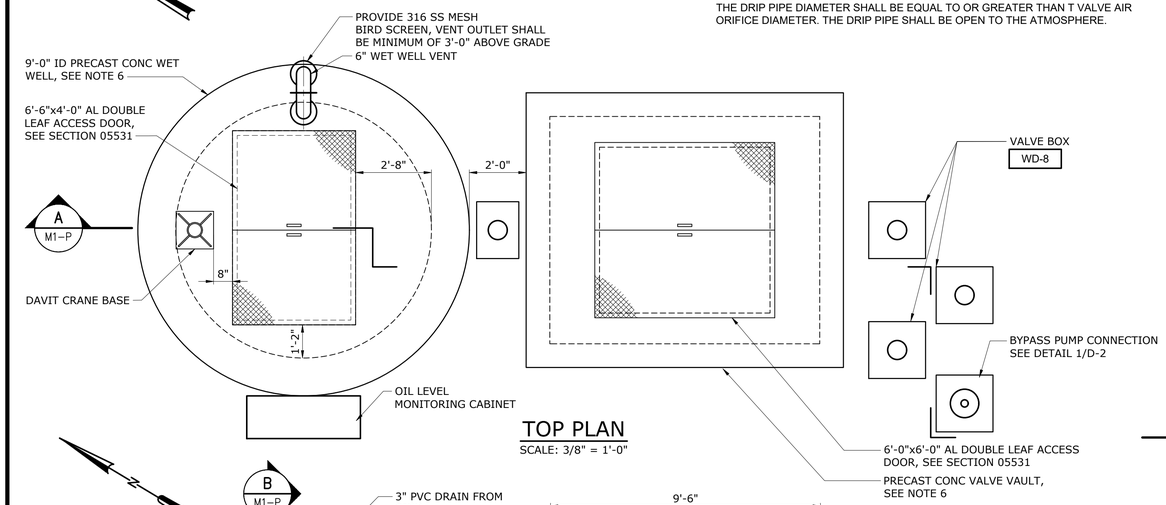

TOP PLAN

SCALE: 3/8" = 1'-0"

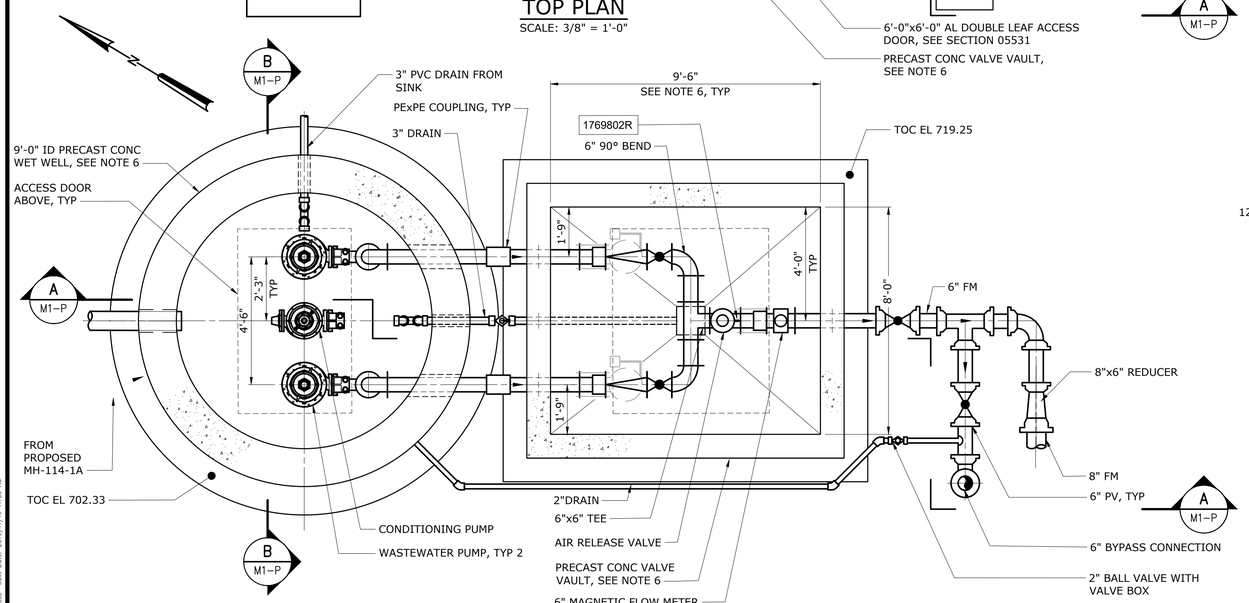

BOTTOM PLAN

SCALE: 3/8" = 1'-0"

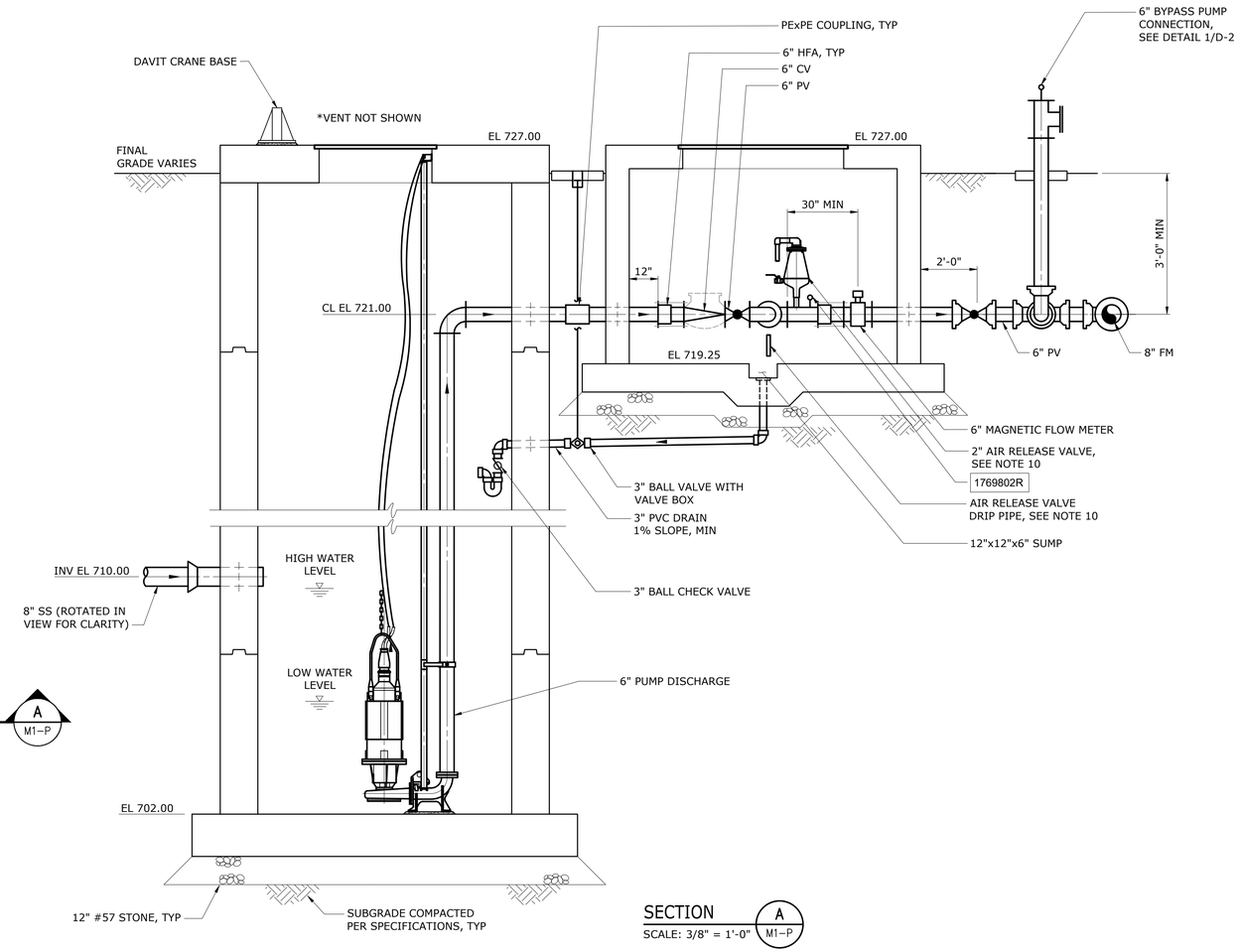

SECTION A

SCALE: 3/8" = 1'-0" M1-P

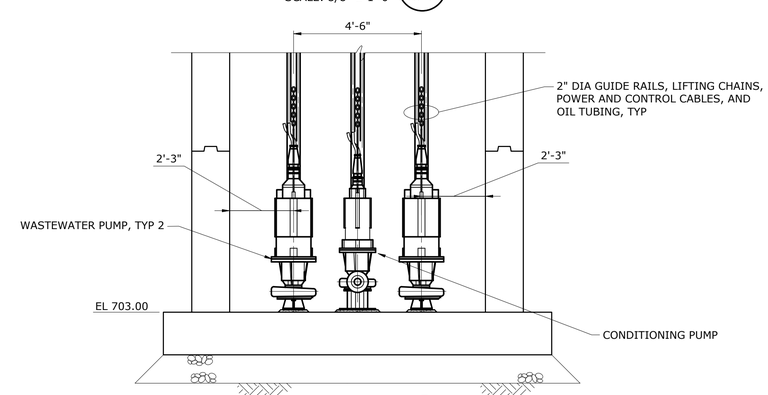

SECTION B

SCALE: 3/8" = 1'-0" M1-P

REV	ISSUED FOR	DATE	BY
	PERMITTING SUBMITTAL	10/2019	AMF

PROJECT ENGINEER: A. FALLON
DESIGNED BY: N. McDERMOTT
DRAWN BY: P. VANGORDEN
CHECKED BY: J. PETERY

IF THIS BAR DOES NOT MEASURE 1" THEN DRAWING IS NOT TO FULL SCALE (0 1/2" 1")

CONSTRUCTION SET

COMMONWEALTH OF VIRGINIA — AGATA M. KIMSON — Lic. No.36934 — 02-04-2020 — PROFESSIONAL ENGINEER

Hazen

HAZEN AND SAWYER
4035 RIDGE TOP ROAD, SUITE 400
FAIRFAX, VA 22030

CITY OF WINCHESTER
WINCHESTER, VIRGINIA

PENNSYLVANIA AVENUE AND CONWAY WASTEWATER PUMP STATIONS REPLACEMENT

MECHANICAL
PENNSYLVANIA AVENUE
WWPS PLANS AND SECTIONS

DATE: FEBRUARY 2020
HAZEN NO.: 31294-007/014
CONTRACT NO.:
DRAWING NUMBER: M1-P

PLOT DATE: 2020/02/03 1:31:47 PM BY: ADURNELL
File: Q:\31294-RIC\31294-007\DESIGN\DRAWINGS\MECH\M-1 Saved By: ADURNELL Save Date: 2019/11/19 11:06 AM

NOTES:

1. ALUMINUM HANDRAIL AND POSTS SHALL BE REMOVABLE. RAILS SHALL BE DISCONTINUOUS AT POSTS FOR REMOVAL.

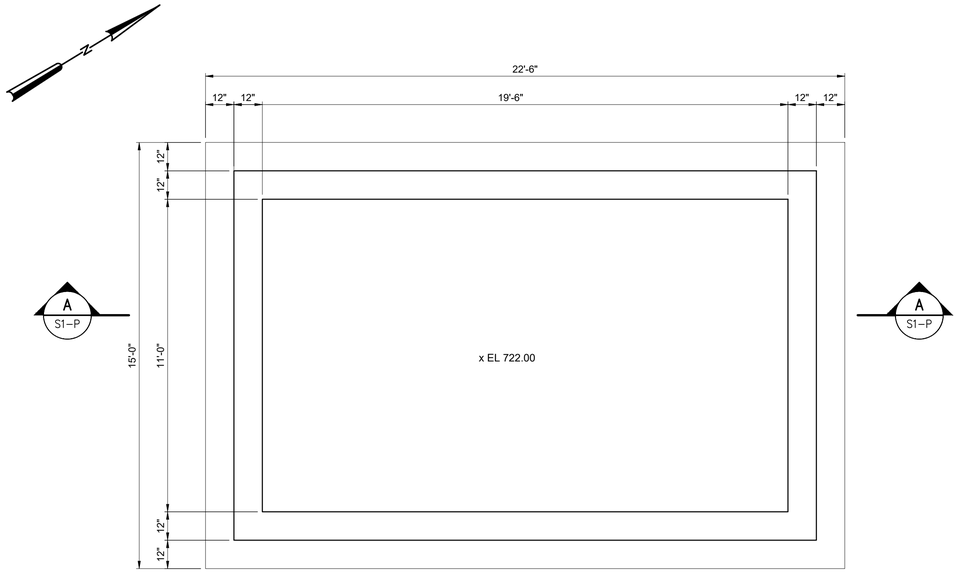

BOTTOM PLAN
SCALE: 3/8" = 1'-0"

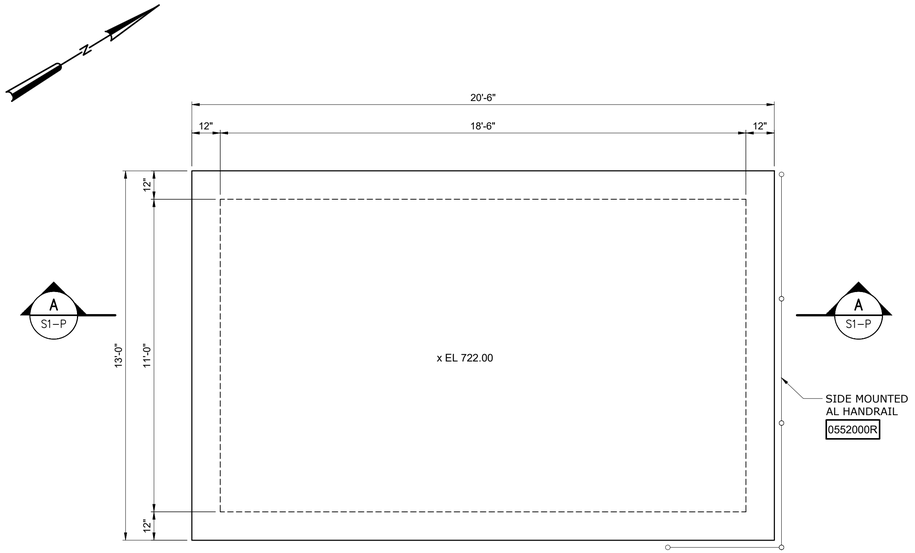

TOP PLAN
SCALE: 3/8" = 1'-0"

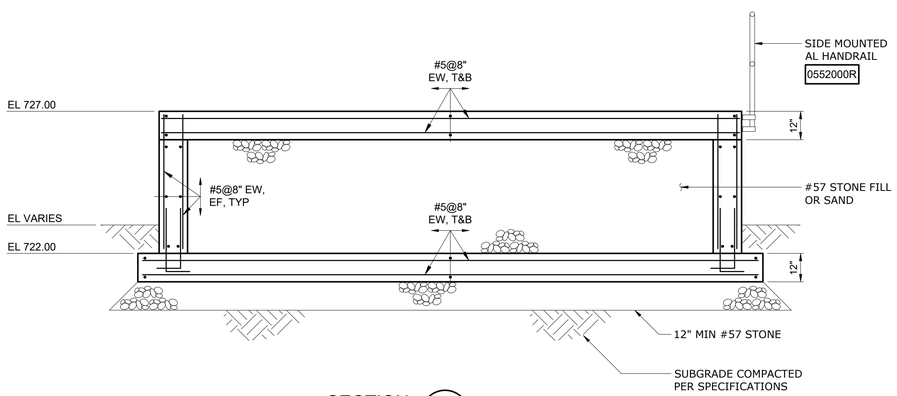

SECTION A S1-P
3/8" = 1'-0"

REV	ISSUED FOR	DATE	BY
	PERMITTING SUBMITTAL	10/2019	AMF

PROJECT ENGINEER: A. FALLON
DESIGNED BY: C. OHRNBERGER
DRAWN BY: P. VANGORDEN
CHECKED BY: C. PHILLIPS
IF THIS BAR DOES NOT MEASURE 1" THEN DRAWING IS NOT TO FULL SCALE 0 1/2" 1"

CONSTRUCTION SET

COMMONWEALTH OF VIRGINIA
CHRISTOPHER T. PHILLIPS
Lic. No.033796
02-04-2020
PROFESSIONAL ENGINEER

Hazen
HAZEN AND SAWYER
4035 RIDGE TOP ROAD, SUITE 400
FAIRFAX, VA 22030

CITY OF WINCHESTER
WINCHESTER, VIRGINIA

PENNSYLVANIA AVENUE AND CONWAY
WASTEWATER PUMP STATIONS REPLACEMENT

STRUCTURAL

PENNSYLVANIA AVE
ELECTRICAL BLDG PLANS
AND SECTION

DATE: FEBRUARY 2020
HAZEN NO.:31294-007/014
CONTRACT NO.:
DRAWING NUMBER: S1-P

PLOT DATE: 2020/02/03 1:32:15 PM BY: ADARNELL
File: G:\31294-RIC\31294-007\DESIGN\DRAWINGS\STRU\S1-P Saved By ADARNELL Save Date: 2019/11/19 4:34 PM

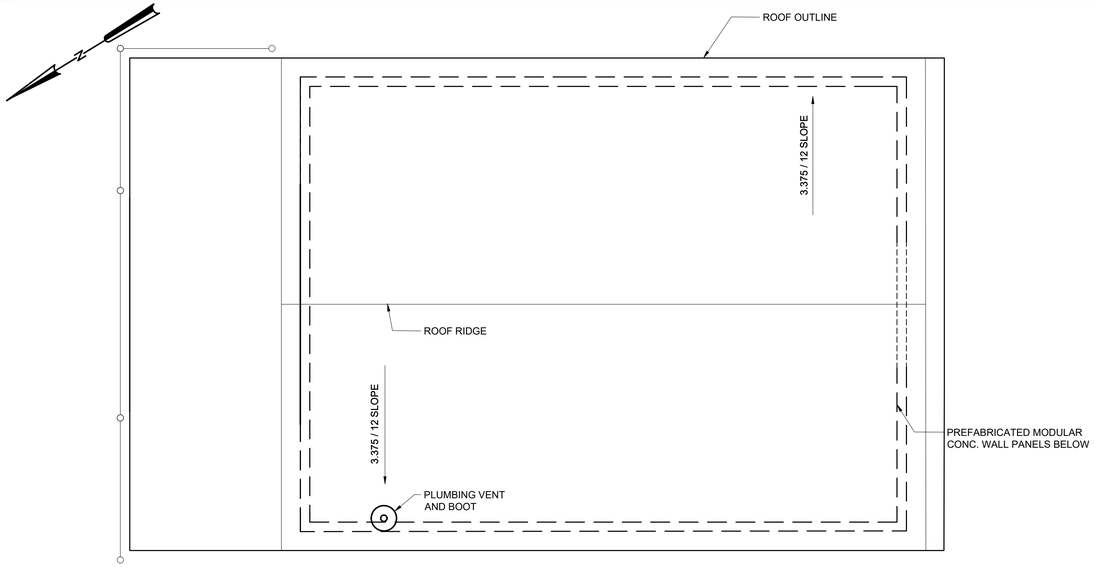

ROOF PLAN
1/2" = 1'-0"

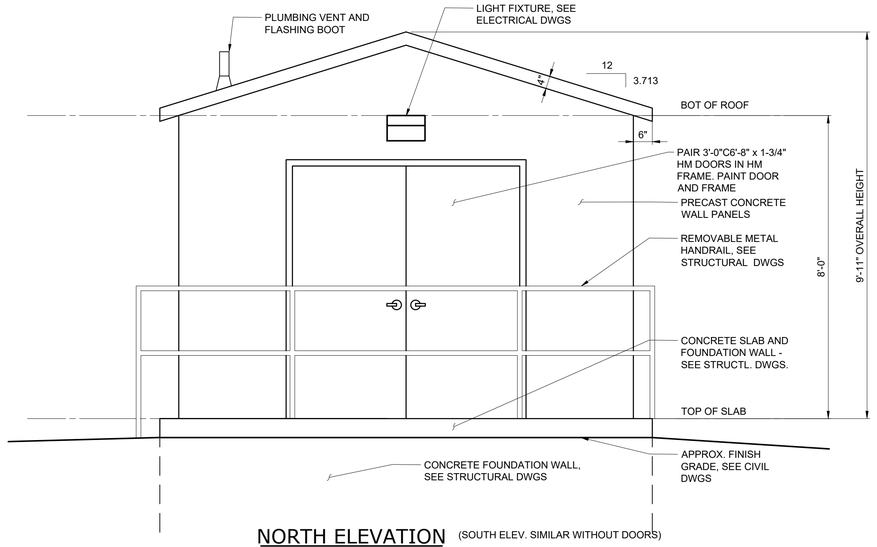

NORTH ELEVATION
(SOUTH ELEV. SIMILAR WITHOUT DOORS)
1/2" = 1'-0"

NOTES:

1. ALL DIMENSIONS AND CONSTRUCTION DETAILS ARE PER "EASI-SET WORLDWIDE" MODULAR BUILDINGS.
2. CONTRACTOR SHALL COORDINATE ALL REQUIRED OPENING SIZES AND LOCATIONS WITH VENDORS AND INDICATE ON SHOP DRAWING SUBMITTALS PRIOR TO FABRICATION OF THE MODULAR BUILDING.
3. DOORS SHALL BE HOLLOW METAL IN A HOLLOW METAL FRAME COMPLETE WITH ALL HARDWARE AS SPECIFIED. BOTH DOORS SHALL OPEN 180 DEGREES. DOORS AND FRAMES SHALL BE PAINTED.
4. CONTRACTOR AND MODULAR BUILDING MANUFACTURER SHALL COORDINATE CONCRETE SLAB CONSTRUCTION WITH STRUCTURAL DRAWINGS.
5. MODULAR BUILDING VENDOR SHALL DESIGN ALL WALL PANELS TO SUPPORT HVAC AND ELECTRICAL EQUIPMENT.
6. FURNISH DOOR BOTTOM SEALS AND ALUM. THRESHOLDS AT ALL EXTERIOR DOOR LOCATIONS.
7. PROVIDE WHERE INDICATED ON DRAWINGS, 10 LB. CAPACITY, HAND PORTABLE FIRE EXTINGUISHER WITH WALL MOUNT, TRI-CLASS DRY CHEMICAL TYPE, WITH UNDERWRITERS' LABORATORIES RATING OF 4-A: 60 BC.
8. PROVIDE 2" FRP COATED INSULATED PANELS ON WALLS AND CEILING. PANELS SHALL BE AS MANUFACTURED BY PERMATHON OR EQUAL.
9. DIMENSIONS SHOWN SHALL BE THE MINIMUM INTERIOR DIMENSION FOR THE PRECAST CONCRETE ELECTRICAL BUILDING. DESIGN OF PRECAST BUILDING, INCLUDING SUPPORT OF ALL APPURTENANCES AND OPENINGS, SHALL BE THE EXCLUSIVE RESPONSIBILITY OF THE PRECAST BUILDING MANUFACTURER IN ACCORDANCE WITH SECTION 03452 - ARCHITECTURAL PRECAST CONCRETE UTILITY BUILDINGS. SUBMIT ERECTION DRAWINGS, INCLUDING OPENINGS AND ATTACHMENT OF APPURTENANCES, SEALED BY A CURRENTLY REGISTERED PROFESSIONAL ENGINEER IN THE COMMONWEALTH OF VIRGINIA.

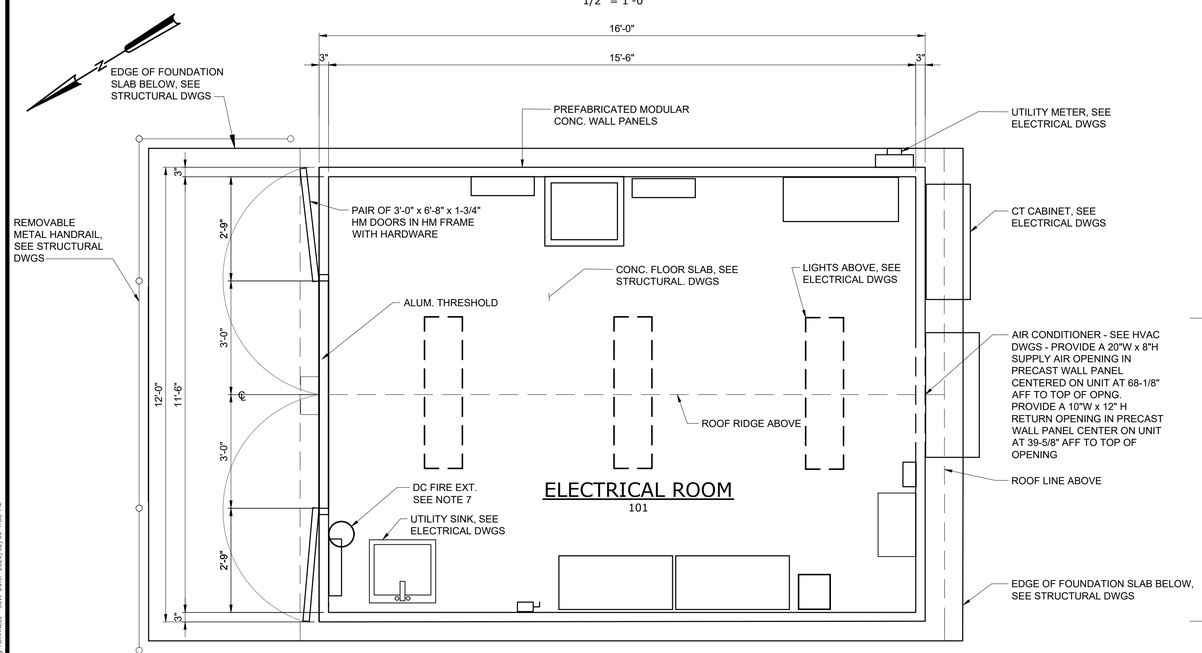

BOTTOM PLAN
1/2" = 1'-0"
SEE ELECTRICAL DRAWINGS FOR ELECTRICAL EQUIPMENT.

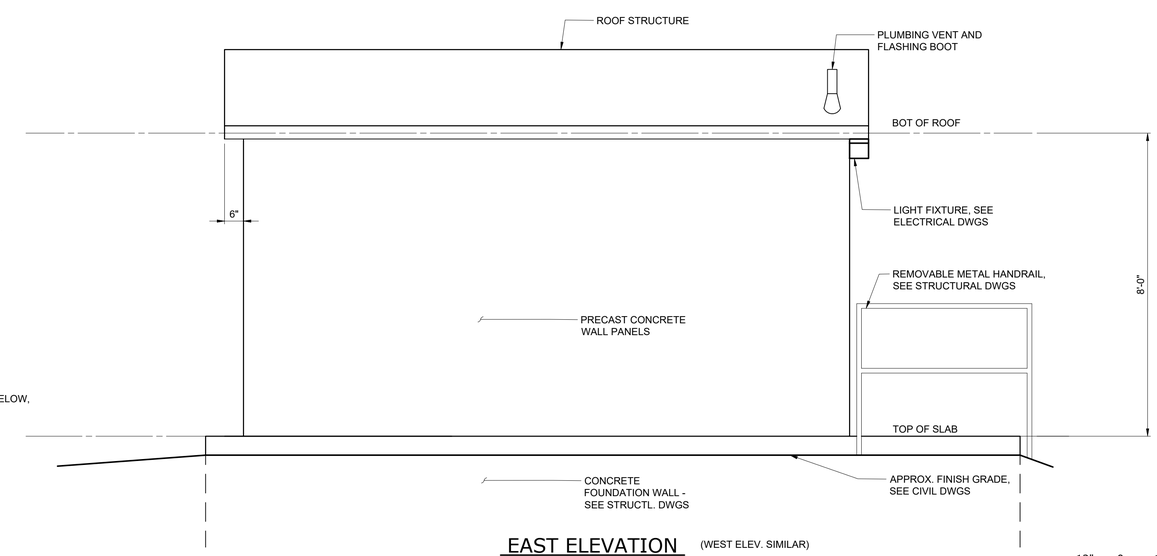

EAST ELEVATION
(WEST ELEV. SIMILAR)
1/2" = 1'-0"

1/2"=1'-0"
12" 0 1 3'

REV	ISSUED FOR	DATE	BY
	PERMITTING SUBMITTAL	10/2019	AMF

PROJECT ENGINEER:	A. FALLON
DESIGNED BY:	W. RUSSELL
DRAWN BY:	R. HAWKINS
CHECKED BY:	W. RUSSELL
IF THIS BAR DOES NOT MEASURE 1" THEN DRAWING IS NOT TO FULL SCALE	0 1/2" 1"

CONSTRUCTION SET

COMMONWEALTH OF VIRGINIA
WILLIAM H. RUSSELL
Lic. No. 8532
02-04-2020
ARCHITECT

Hazen

HAZEN AND SAWYER
4035 RIDGE TOP ROAD, SUITE 400
FAIRFAX, VA 22030

CITY OF WINCHESTER
WINCHESTER, VIRGINIA

PENNSYLVANIA AVENUE AND CONWAY
WASTEWATER PUMP STATIONS REPLACEMENT

ARCHITECTURAL
PENNSYLVANIA AVE
ELECTRICAL BUILDING
PLANS AND ELEVATIONS

DATE: FEBRUARY 2020
HAZEN NO.: 31294-007/014
CONTRACT NO.:
DRAWING NUMBER: A1-P

PLOT DATE: 2020/02/03 1:41:25 PM BY: ADARNELL
File: Q:\31294-RC\31294-007\DESIGN\DRAWINGS\MECH\A1-P PLANS AND ELEVATIONS Saved By ADARNELL Save Date: 2020/02/03 1:38 PM

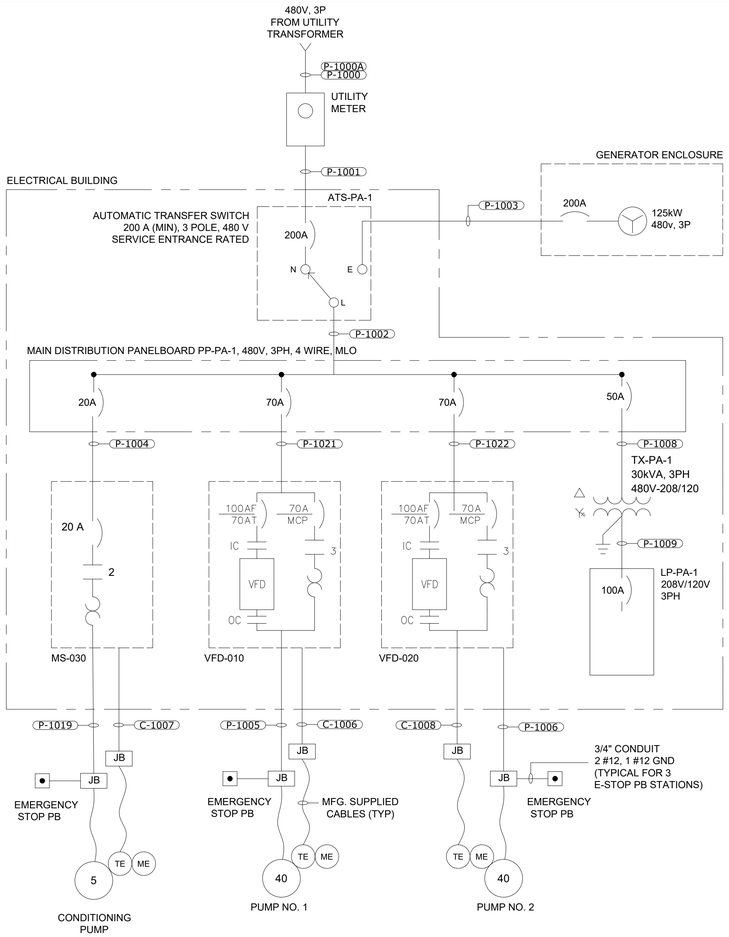

PENNSYLVANNIA AVE PUMP STATION ONE-LINE DIAGRAM

NO SCALE

NOTES:

1. ALL LIGHTING AND RECEPTACLE CIRCUITS SHALL BE 2-#12, 1-#12 GROUND IN A $\frac{3}{4}$" CONDUIT UNLESS OTHERWISE SPECIFIED.

CONDUIT NO.	SIZE	FROM	TO	CONDUCTORS	REMARKS
P-1000	4"	UTILITY TRANSFORMER	UTILITY METER	BY UTILITY	
P-1000A	4"	UTILITY TRANSFORMER	UTILITY METER	SPARE	
P-1001	4"	UTILITY METER	TRANSFER SWITCH ATS-PA-1	4#3/0,#6 GND	
P-1002	2"	TRANSFER SWITCH ATS-PA-1	MAIN DISTRIBUTION PANEL	4#3/0,#6 GND	
P-1003	2"	TRANSFER SWITCH ATS-PA-1	GENERATOR MAIN BREAKER	4#3/0,#6 GND	
P-1004	1"	POWER PANEL PP-PA-1	CONDITIONING PUMP STARTER (MS-030)	3#1, #6 GND	
P-1005	1-1/4"	VARIABLE FREQUENCY DRIVE (VFD-010)	SEWAGE PUMP NO. 1 (P-010)	3#4,2#12, 1#8 GND	
P-1006	1-1/4"	VARIABLE FREQUENCY DRIVE (VFD-020)	SEWAGE PUMP NO. 2(P-020)	3#4,2#12, 1#8 GND	
P-1007				NOT USED	
P-1008	1"	MAIN DISTRIBUTION PANEL	TRANSFORMER TX-PA-1	3#6,#10 GND	
P-1009	1-1/4"	TRANSFORMER TX-PA-1	LIGHTING PANEL LP-PA-1	3#2, #8 GND	
P-1010	3/4"	LIGHTING PANEL LP-PA-1	SCADA PANEL	2#12, 1#12 GND	
P-1011	3/4"	LIGHTING PANEL LP-PA-1	FLOW TRANSMITTER FIT-050	2#12, 1#12 GND	
P-1012	3/4"	LIGHTING PANEL LP-PA-1	LEVEL TRANSMITTER LIT-001	2#12, 1#12 GND	
P-1013	3/4"	LIGHTING PANEL LP-PA-1	GENERATOR BLOCK HEATER	3#12, 1#12 GND	
P-1014	3/4"	LIGHTING PANEL LP-PA-1	GENERATOR CONTROL PANEL	2#12, 1#12 GND	
P-1015	3/4"	LIGHTING PANEL LP-PA-1	GENERATOR BATTERY CHARGER	2#12, 1#12 GND	
P-1016				NOT USED	
P-1017				NOT USED	
P-1018	3/4"	LIGHTING PANEL LP-PA-1	INSTANT WATER HEATER	2#8, #10 GND	VIA DISCONNECT DSW-IWH
P-1019	1 1/2"	CONDITIONING PUMP STARTER (MS-030)	JB BY WET WELL	3#12,2#12, 1#12 GND	
P-1020	3/4"	LIGHTING PANEL LP-PA-1	AIR CONDITIONER	2#8, 1#10 GND	
P-1021	1-1/4"	POWER PANEL PP-PA-1	VARIABLE FREQUENCY DRIVE (VFD-010)	3#4, 1#8 GND	
P-1022	1-1/4"	POWER PANEL PP-PA-1	VARIABLE FREQUENCY DRIVE (VFD-020)	3#4, 1#8 GND	

208/120 VOLTS
3 PHASE, 4 WIRE

LP-CY-1
MAIN BREAKER
100A 3P

TYPE: NEMA 12
MOUNT: SURFACE

MODS	DESCRIPTION	WIRE	TRIP	POLE	No.	VOLT-AMPERES A	VOLT-AMPERES B	VOLT-AMPERES C	VOLT-AMPERES A	VOLT-AMPERES B	VOLT-AMPERES C	No.	POLE	TRIP	WIRE	DESCRIPTION	MODS
-	CONTROL BUILDING LIGHTS	NOTE 1	20	1	1	250			1,000			2	3	20	P-1013	GENERATOR BLOCK HEATER	
GFCI	CONTROL BLDG RECEPTACLES	NOTE 1	20	1	3		540			1,000		4					
-	SPARE		20	1	5			-			1,000	6					
	SPARE		20	1	7	-			500			8	1	20	P-1014	GENERATOR CONTROL PANEL	
-	SCADA/PLC PANEL	P-1010	20	1	9		500			750		10	1	20	P-1014	GENERATOR BATT. CHARGER	
-	EXTERIOR LIGHTING	NOTE 1	20	1	11			700			-	12	1	20		SPARE	
	SPARE		20	1	13	-			-			14	3	20		SPARE	
	A/C UNIT	P-1020	40	2	15		4,540			-		16					
					17			4,540			-	18					
	SPARE		20	3	19	-			-			20	1	20		SPARE	
					21		-			-		22	1	20		SPARE	
					23			-			-	24	1	20		SPARE	
-	FLOW TRANSMITTER	P-1011	20	1	25	100			3,500			26	1	20	P-1018	INST. WATER HEATER	GFCI
-	LEVEL TRANSMITTER	P-1012	20	1	27		100			-		28	1	20		SPARE	-
-	SCADA/PLC PANEL	P-1019	20	1	27			250			-	28	1	20		SPARE	-
-	SPARE		20	1	29	-						30	1	20		SPARE	-

TOTAL	350	5,680	5,490	5,000	1,750	1,000	TOTAL
	PHASE TOTAL			TOTAL LOAD (VA)			
	5,350	7,430	6,490	19,270			
				TOTAL LOAD (A)			
				53			

MODIFICATION (MODS) LEGEND:
GFCI - GROUND FAULT CIRCUIT INTERRUPTER
LOD - LOCK-ON DEVICE
LFD - LOCK-OFF DEVICE

NOTES:
22K AIC
100kA SPD

PANEL SCHEDULE

CONDUIT NO.	SIZE	FROM	TO	CONDUCTORS	REMARKS
C-1001	1"	PUMP NO. 1 VFD (VFD-010)	SCADA/PLC PANEL	22#14, 1#14 GND	4 SPARE
C-1002	3/4"	OIL FILL ENCLOSURE	SCADA/PLC PANEL	6#14, 1#14 GND	
C-1003	1"	PUMP NO. 2 VFD (VFD-020)	SCADA/PLC PANEL	22#14, 1#14 GND	4 SPARE
C-1004	3/4"	SCADA/PLC PANEL	AUTOMATIC TRANSFER SWITCH ATS-PA-1	4#12, 1#14	
C-1005	3/4"	GENERATOR CONTROL PANEL	AUTOMATIC TRANSFER SWITCH ATS-PA-1	6#14, 1#14 GND	
C-1006	1 1/2"	PUMP NO. 1 VFD (VFD-010)	JB AT WET WELL	2-#16 TSP; 12#14; 1#14 GND	PUMP NO. 1 PROTECTIVE DEV.
C-1007	1 1/2"	CONDITIONING PUMP STARTER (MS-030)	JB AT WET WELL	1-#16 TSP; 12#14; 1#14 GND	COND PUMP PROT. DEV.
C-1008	1 1/2"	PUMP NO. 2 VFD (VFD-020)	JB AT WET WELL	2-#16 TSP; 12#14; 1#14 GND	PUMP NO. 2 PROTECTIVE DEV.
C-1009	3/4"	CONDITIONING PUMP STARTER (MS-030)	SCADA/PLC PANEL	8#14, 1#14 GND	
C-1010	1"	MV FLOODED LEVEL SWITCH LSH-055	SCADA/PLC PANEL	3#14, 1#14 GND	
I-1001	3/4"	FLOW TRANSMITTER FIT-050	SCADA/PLC PANEL	1#16 TSP, 1 #14 GND	
I-1002	3/4"	LEVEL TRANSMITTER LIT-001	SCAD/PLC PANEL	2#16 TSP, 1 #14 GND	
I-1003	3/4"	LEVEL TRANSMITTER LIT-001	LEVEL SENSOR LE-001	MFG CABLE	
I-1004	3/4"	FLOW TRANSMITTER FIT-050	FLOW SENSOR FE-050	MFG CABLE	
I-1005	3/4"	PUMP NO. 1 VFD (VFD-010)	SCADA/PLC PANEL	2#16 TSP, 1 #14 GND	
I-1006	3/4"	PUMP NO. 2 VFD (VFD-020)	SCADA/PLC PANEL	2#16 TSP, 1 #14 GND	
I-1007	1"	LEVEL SENSOR PE/LT-002	SCADA/PLC PANEL	1#16 TSP, 1 #14 GND	

REV	ISSUED FOR	DATE	BY
	PERMITTING SUBMITTAL	10/2019	AMF

PROJECT ENGINEER: A. FALLON
DESIGNED BY: D. WEBER
DRAWN BY: P. VANGORDEN
CHECKED BY: E. FRANCOIS
IF THIS BAR DOES NOT MEASURE 1" THEN DRAWING IS NOT TO FULL SCALE 0 1/2" 1"

CONSTRUCTION SET

COMMONWEALTH OF VIRGINIA
EVERSLEY A. FRANCOIS
Lic. No. 37149
02-04-2020
PROFESSIONAL ENGINEER

Hazen
HAZEN AND SAWYER
4035 RIDGE TOP ROAD, SUITE 400
FAIRFAX, VA 22030

CITY OF WINCHESTER
WINCHESTER, VIRGINIA

PENNSYLVANIA AVENUE AND CONWAY
WASTEWATER PUMP STATIONS REPLACEMENT

ELECTRICAL
PENNSYLVANIA AVENUE
ONE-LINE DIAGRAM, CABLE
SCHEDULES, ELEMENTARY DIAGRAM

DATE: FEBRUARY 2020
HAZEN NO.: 31294-007/014
CONTRACT NO.:
DRAWING NUMBER: E1-P

PLOT DATE: 2020/02/03 3:58:31 PM BY: ADAMGELI
File: G:\31294-RIC\31294-014\ENGINEERING\CIVIL\ELEC\E-1-P Saved By: MBROCATO Save Date: 2019/11/25 2:13 PM

NOTES:

1. SEE SHEET E2-C FOR GENERAL NOTES.
2. EXISTING UTILITY SERVICE TO BE DEMOLISHED PER THE REQUIREMENTS OF SECTION 16000. NEW UNDERGROUND SECONDARY FEEDERS SHALL BE INSTALLED AS SHOWN.
3. NEW POWER POLE AND 480V, 3 PHASE SERVICE DROP PER SPECIFICATION 16000

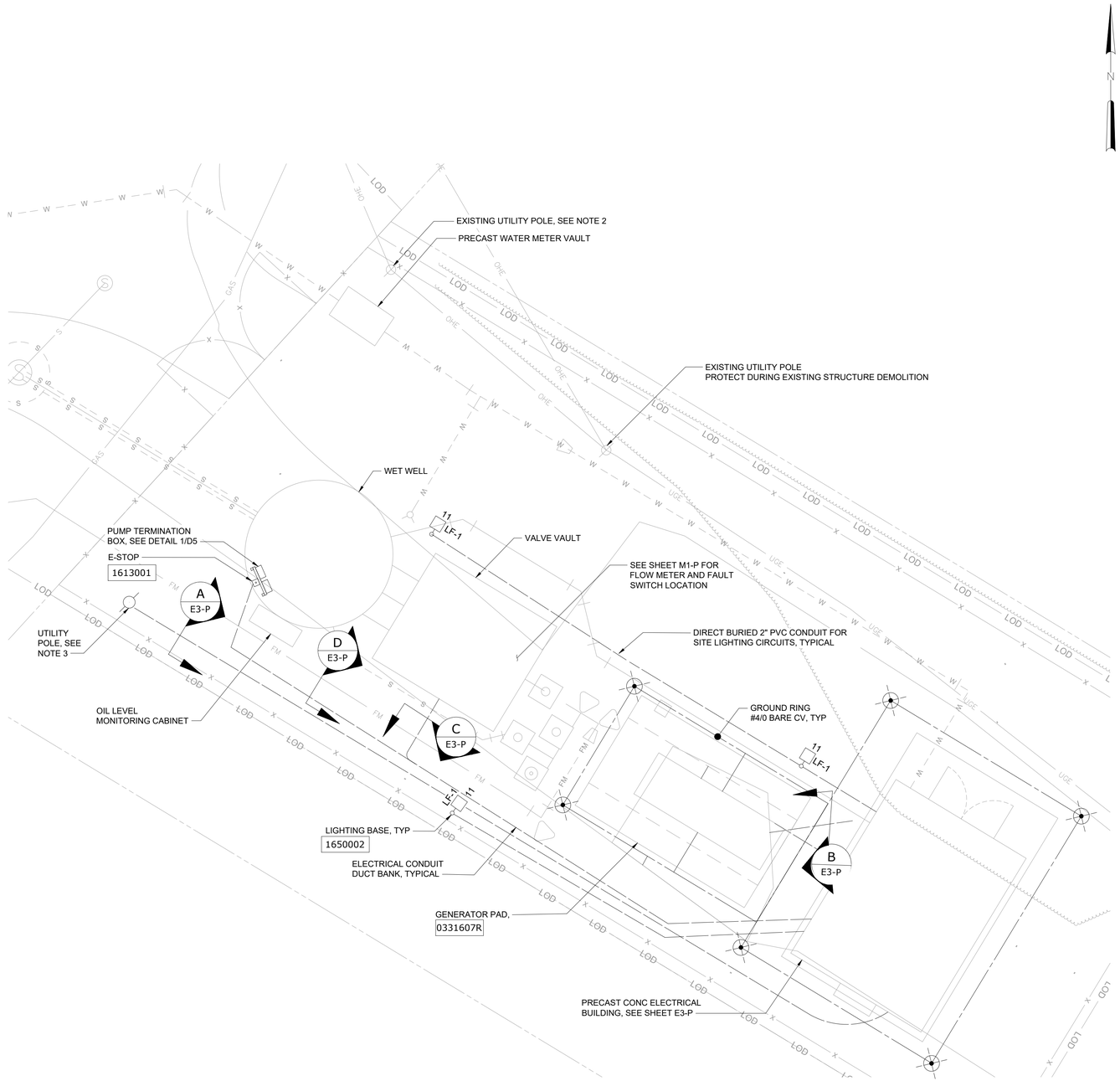

PROPOSED SITE PLAN

1" = 5'-0"

DUCT BANK SCHEDULE	
DB-A	P-1000, P-1000A
DB-B	P-1005, P-1006, C-1006, C-1007 P-1019, C-1002, C-1008, I-1003
DB-C	I-I004, C-1010
DB-D	P-1003, C-2005 P-1013, P-1014, P1015, I-1007

1" = 5' 5 0 5'

REV	ISSUED FOR	DATE	BY
	PERMITTING SUBMITTAL	10/2019	AMF

PROJECT ENGINEER:	A. FALLON
DESIGNED BY:	D. WEBER
DRAWN BY:	P. VANGORDEN
CHECKED BY:	E. FRANCOIS
IF THIS BAR DOES NOT MEASURE 1" THEN DRAWING IS NOT TO FULL SCALE	0 1/2" 1"

CONSTRUCTION SET

COMMONWEALTH OF VIRGINIA
EVERSLEY A. FRANCOIS
Lic. No. 07149
PROFESSIONAL ENGINEER
02-04-2020

Hazen

HAZEN AND SAWYER
4035 RIDGE TOP ROAD, SUITE 400
FAIRFAX, VA 22030

CITY OF WINCHESTER
WINCHESTER, VIRGINIA

PENNSYLVANIA AVENUE AND CONWAY
WASTEWATER PUMP STATIONS REPLACEMENT

ELECTRICAL
PENNSYLVANIA AVENUE
PARTIAL SITE PLAN

DATE: FEBRUARY 2020
HAZEN NO.: 31294-007/014
CONTRACT NO.:
DRAWING NUMBER: E2-P

PLOT DATE: 2020/02/03 1:17:58 PM BY: ADAWNELL
File: G:\31294-RIC\31294-014\ENGINEERING\CIVIL\ELEC\E-2-P Saved By MBRICATO Save Date: 2019/11/25 2:15 PM

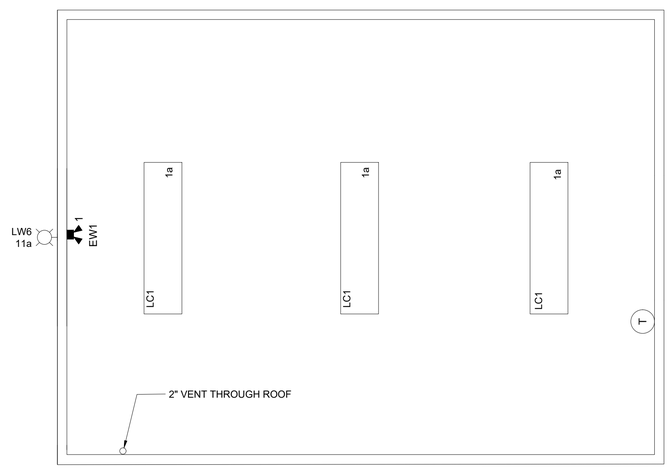

CEILING PLAN

SCALE: 1/2" = 1'-0"

FIXTURE TYPE	LAMP/ FIXTURE WATTAGE	DESCRIPTION	MFR AND MODEL
EW1	70 W	WALL MOUNTED, EMERGENCY FIXTURE, 120-277 VAC WITH 6 OR 12 VDC NICKEL CADMIUM BATTERY, GRAY CORROSION AND IMPACT RESISTANT MOLDED FIBERGLASS HOUSING, TIME DELAY SHUTOFF, SURGE AND BROWN-OUT PROTECTION, AND LOW VOLTAGE BATTERY CUT-OFF. BATTERY SHALL BE SUITABLE FOR 90 MINUTES (INCLUDING ALL REMOTE HEADS AS SHOWN ON DRAWINGS).TWO 35W HIGH INTENSITY TUNGSTEN LAMP HEADS, WET LOCATION LISTED.	HOLOPHANE DESOTO M90X, PHILIPS RHYNO SERIES, LITHONIA INDX SERIES, OR EQUAL.
LC1	61 W (MAX)	CEILING-MOUNTED, 120 V, LED LIGHT FIXTURE, COLOR TEMPERATURE OF 4100K, LINEAL RIBBED FROSTED ACRYLIC LENS, GENERAL DISTRIBUTION, GASKETED FIBERGLASS HOUSING, STAINLESS STEEL LATCHES, 4FT, 6000 LUMEN MINIMUM, AND DAMP LOCATION LISTED.	HOLOPHANE EMS LED SERIES, COOPER VAPORTITE LED SERIES, LITHONIA FEM LED SERIES, OR EQUAL.
LF1	111 W	LED POLE MOUNT AREA LIGHT, WEATHERPROOF,120 V, 16000 LUMENS, 40K COLOR TEMPERATURE, FULL VISOR GLARE SHIELD. SQUARE ALUMINUM POLE, MOUNTING HEIGHT 16 FEET, COLOR: BRONZE.	LITHONIA RSX2 LED - R5 DISTRIBUTION, OR EQUAL.
LW6	10 (MAX)	WALL-MOUNTED, 120-277 VAC, LED LIGHT FIXTURE, COLOR TEMPERATURE OF 4000K, DARK BRONZE ALUMINUM HOUSING, 800 LUMEN MINIMUM, AND WET LOCATION LISTED. PROVIDE WITH MATCHING MOUNTING BOX FOR CONDUIT CONNECTION.	LITHONIA LIL, OR EQUAL.

NOTES:

1. SCADA RTU SHALL BE SUPPLIED AND PROGRAMMED BY OTHERS. INSTALLATION AND WIRING SHALL BE BY THE CONTRACTOR. CONTRACTOR SHALL COORDINATE WITH THE OWNER DURING CONSTRUCTION TO DETERMINE THE LOCATION OF THE REQUIRED I/O TERMINATIONS.
2. LOCATE FLOOR DRAIN IN THE VICINITY OF THE BACKFLOW PREVENTER.
3. INSTANTANEOUS HOT WATER HEATER MOUNTED TO WALL UNDERNEATH UTILITY SINK AND ROUTE HOT WATER LINE TO SINK. PROVIDE RECEPTACLE AND CORD CONNECTION ADJACENT TO HEATER.

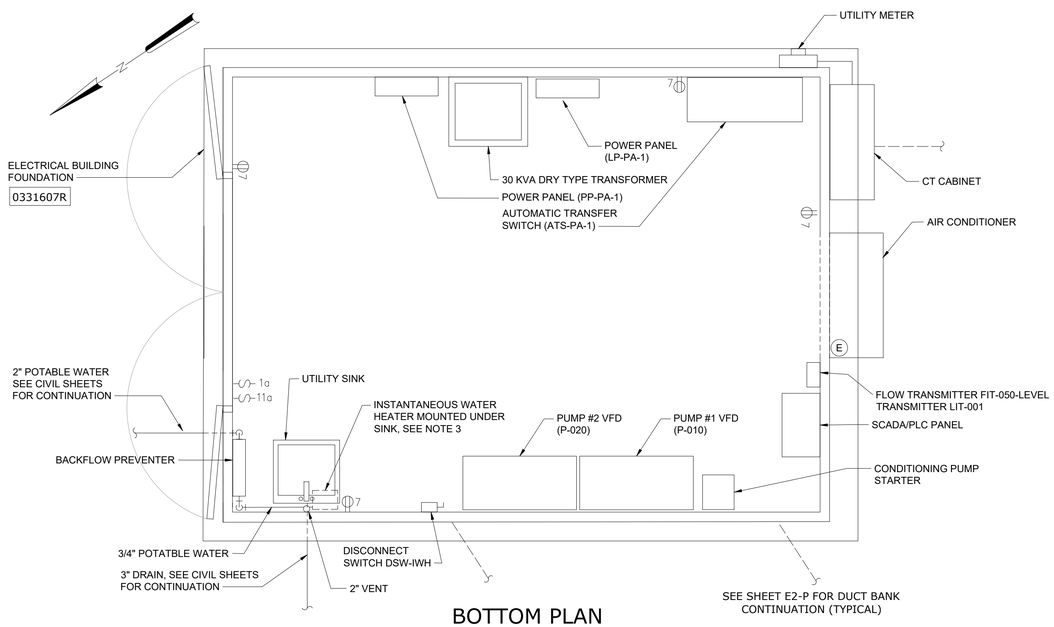

BOTTOM PLAN

SCALE: 1/2" = 1'-0"

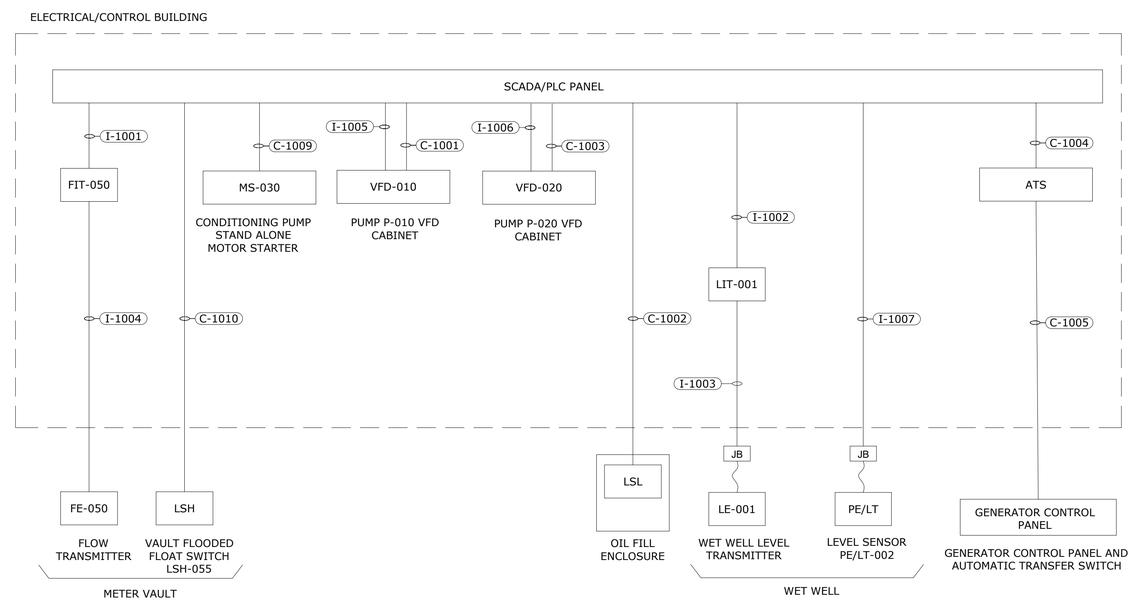

SCADA/PLC PANEL - CONTROL ONE-LINE DIAGRAM

NO SCALE

1/2"=1'-0" 12" 0 1 3'

REV	ISSUED FOR	DATE	BY
	PERMITTING SUBMITTAL	10/2019	AMF

PROJECT ENGINEER:	A. FALLON
DESIGNED BY:	D. WEBER
DRAWN BY:	P. VANGORDEN
CHECKED BY:	E. FRANCOIS
IF THIS BAR DOES NOT MEASURE 1" THEN DRAWING IS NOT TO FULL SCALE	0 1/2" 1"

CONSTRUCTION SET

COMMONWEALTH OF VIRGINIA
EVERSLEY A. FRANÇOIS
Lic. No. 57149
02-04-2020
PROFESSIONAL ENGINEER

Hazen

HAZEN AND SAWYER
4035 RIDGE TOP ROAD, SUITE 400
FAIRFAX, VA 22030

CITY OF WINCHESTER
WINCHESTER, VIRGINIA

PENNSYLVANIA AVENUE AND CONWAY
WASTEWATER PUMP STATIONS REPLACEMENT

ELECTRICAL
PENNSYLVANIA AVENUE
ELECTRICAL BUILDING PLAN AND
SECTION

DATE:	FEBRUARY 2020
HAZEN NO.:	31294-007/014
CONTRACT NO.:	
DRAWING NUMBER:	E3-P

PLOT DATE: 2020/02/03 1:18:25 PM BY: ADAMWELL
File: G:\31294-RIC\31294-014\ENGINEERING\CIVIL\ELEC\E-3-P Saved By MBRICCATO Save Date: 2019/11/25 2:23 PM

NOTES:

1. TYPICAL CONNECTIONS AND CONTROLS FOR P-020. SEE ELECTRICAL DRAWINGS FOR MORE DETAIL.
2. LIT-001 AND FIT-050 ARE REMOTE MOUNTED IN THE ELECTRICAL ROOM.

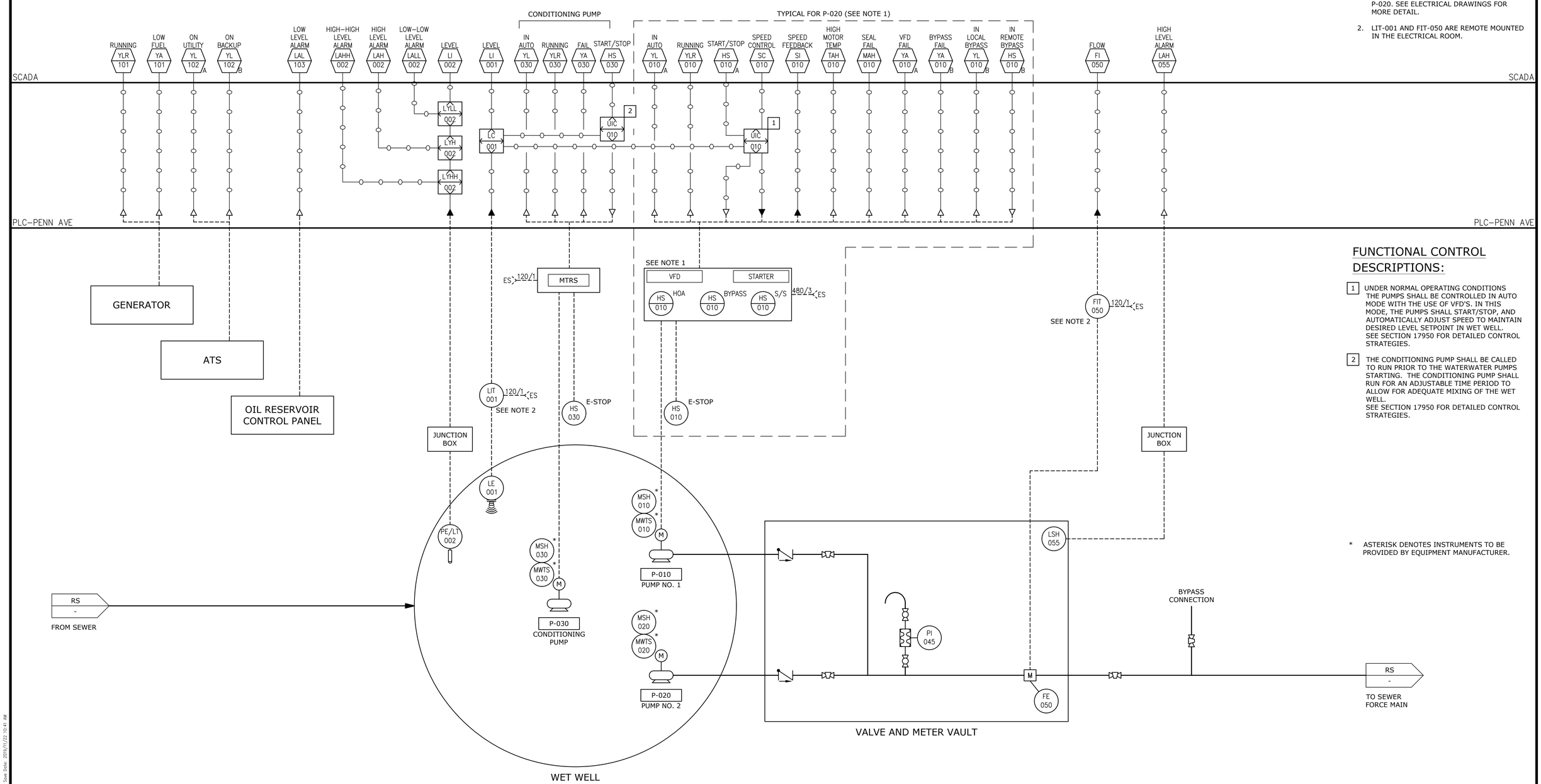

FUNCTIONAL CONTROL DESCRIPTIONS:

1. UNDER NORMAL OPERATING CONDITIONS THE PUMPS SHALL BE CONTROLLED IN AUTO MODE WITH THE USE OF VFD'S. IN THIS MODE, THE PUMPS SHALL START/STOP, AND AUTOMATICALLY ADJUST SPEED TO MAINTAIN DESIRED LEVEL SETPOINT IN WET WELL. SEE SECTION 17950 FOR DETAILED CONTROL STRATEGIES.
2. THE CONDITIONING PUMP SHALL BE CALLED TO RUN PRIOR TO THE WATERWATER PUMPS STARTING. THE CONDITIONING PUMP SHALL RUN FOR AN ADJUSTABLE TIME PERIOD TO ALLOW FOR ADEQUATE MIXING OF THE WET WELL. SEE SECTION 17950 FOR DETAILED CONTROL STRATEGIES.

* ASTERISK DENOTES INSTRUMENTS TO BE PROVIDED BY EQUIPMENT MANUFACTURER.

REV	ISSUED FOR	DATE	BY
	PERMITTING SUBMITTAL	10/2019	AMF

PROJECT ENGINEER: A. FALLON
DESIGNED BY: C. KOLESA
DRAWN BY: C. KOLESA
CHECKED BY: D. EDWARDS
IF THIS BAR DOES NOT MEASURE 1" THEN DRAWING IS NOT TO FULL SCALE 0 1/2" 1"

CONSTRUCTION SET

COMMONWEALTH OF VIRGINIA
DANIEL B. EDWARDS
Lic. No.24960
02-04-2020
PROFESSIONAL ENGINEER

Hazen
HAZEN AND SAWYER
4035 RIDGE TOP ROAD, SUITE 400
FAIRFAX, VA 22030

CITY OF WINCHESTER
WINCHESTER, VIRGINIA

PENNSYLVANIA AVENUE AND CONWAY WASTEWATER PUMP STATIONS REPLACEMENT

INSTRUMENTATION
PENNSYLVANIA AVENUE
PROCESS AND INSTRUMENTATION DIAGRAM

DATE: FEBRUARY 2020
HAZEN NO.: 31294-007/014
CONTRACT NO.:
DRAWING NUMBER: I1-P

PLOT DATE: 2020/02/03 2:41:16 PM BY: KSUTTON
File: Q:\31294-RC\31294-007\DESIGN\DRAWINGS\INSTU-2-P Saved By: CKOLESA Save Date: 2019/11/22 10:41 AM

NOTES:

1. THE EXISTING 8" FORCE MAIN TRANSITIONS TO A 6" PVC FORCE MAIN APPROXIMATELY 96" FROM THE OUTERWALL OF THE PUMP STATION.
2. BORINGS FROM SEPTEMBER 2018 REPORT OF GEOTECHNICAL EXPLORATION BY TRIAD ENGINEERING. BORING LOCATIONS ARE DISTINGUISHED AS B-1 AND B-2 ON THIS SHEET.

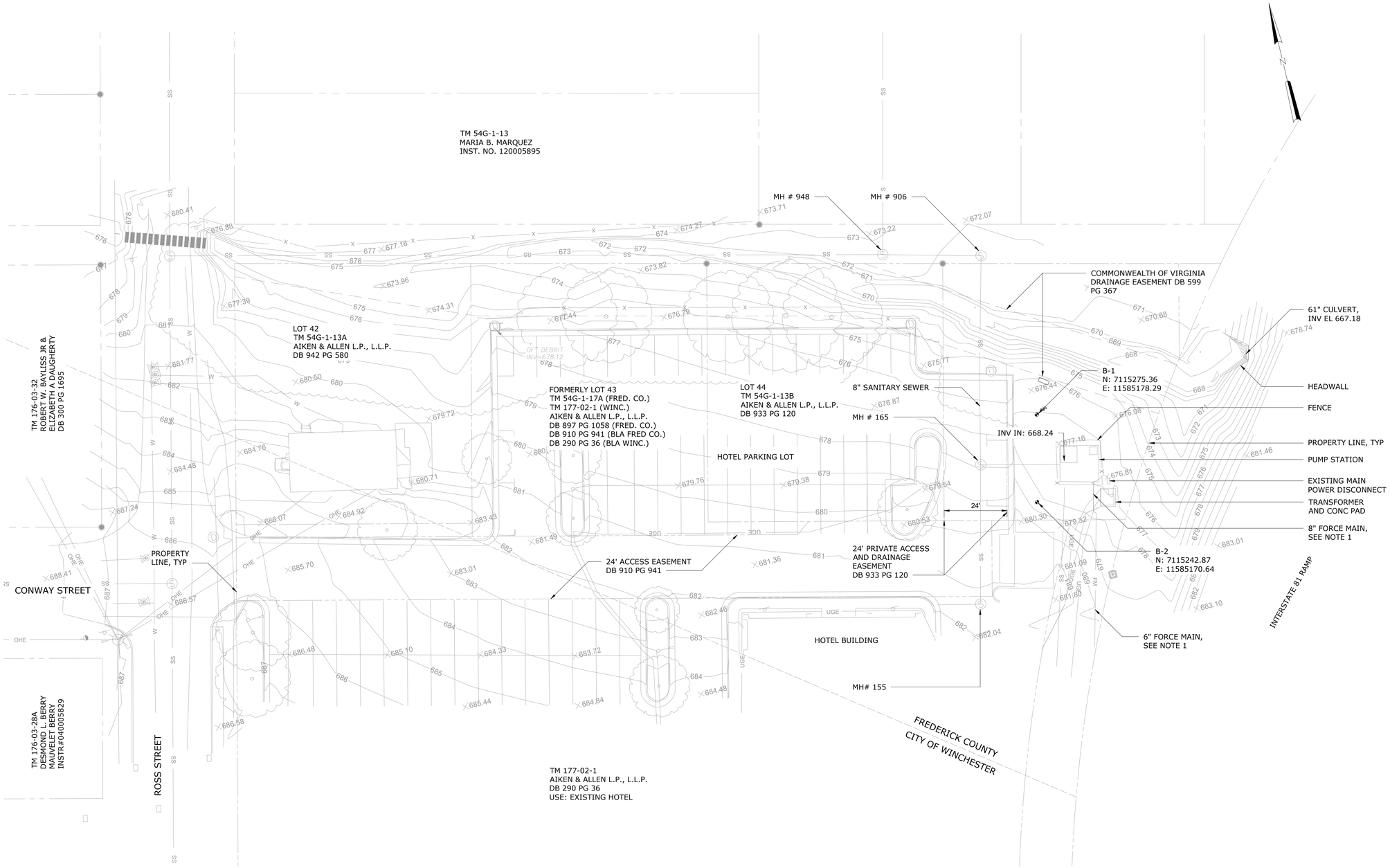

SCALE: 1" = 20' 20 10 0 20'

REV	ISSUED FOR	DATE	BY
	PERMITTING SUBMITTAL	10/2019	AMF

PROJECT ENGINEER:	A. FALLON
DESIGNED BY:	S. NASH
DRAWN BY:	S. NASH
CHECKED BY:	J. PETERY
IF THIS BAR DOES NOT MEASURE 1" THEN DRAWING IS NOT TO FULL SCALE	0 1/2" 1"

CONSTRUCTION SET

COMMONWEALTH OF VIRGINIA
JOEL K. PETERY
Lic. No.036763
02-04-2020
PROFESSIONAL ENGINEER

Hazen

HAZEN AND SAWYER
4035 RIDGE TOP ROAD, SUITE 400
FAIRFAX, VA 22030

CITY OF WINCHESTER
WINCHESTER, VIRGINIA

PENNSYLVANIA AVENUE AND CONWAY
WASTEWATER PUMP STATIONS REPLACEMENT

CIVIL
CONWAY
EXISTING SITE CONDITIONS

DATE:	FEBRUARY 2020
HAZEN NO.:	31294-007/014
CONTRACT NO.:	
DRAWING NUMBER:	C1-C

PLOT DATE: 2020/02/03 1:05:44 PM BY: ADARNELL
File: G:\31294-RIC\31294-014\ENGINEERING\CIVIL\CIVIL\C1-C Saved By: ADARNELL Save Date: 2019/11/19 3:53 PM

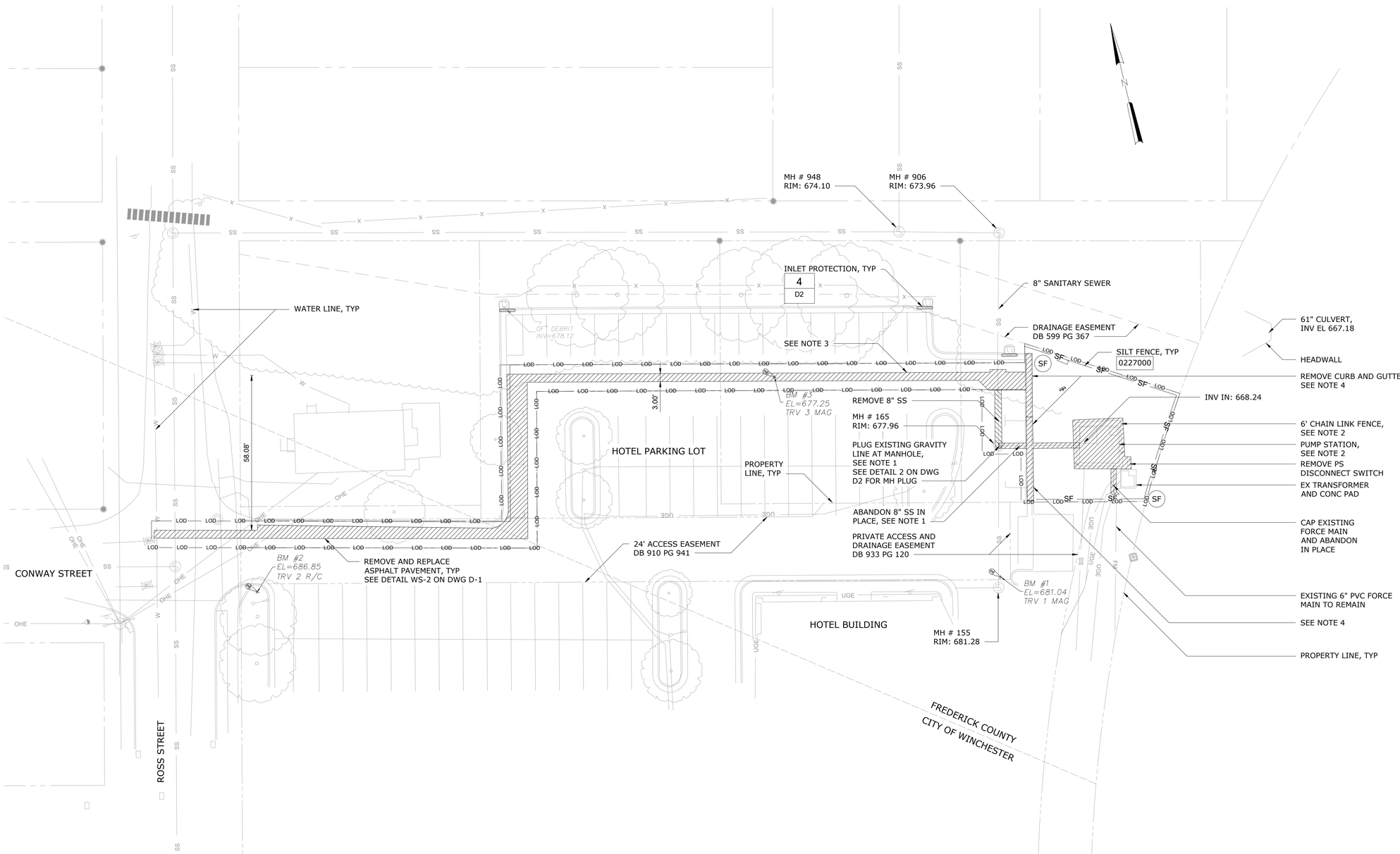

NOTES:

1. ALL BURIED PIPES DESIGNATED FOR DEMOLITION SHALL BE ABANDONED IN PLACE. PIPES SHALL BE FILLED WITH 3000 PSI CONCRETE GROUT, PLUGGED OR CAPPED AND SEALED AT BOTH ENDS.
2. AFTER PUMP STATION HAS BEEN ACCEPTED BY THE CITY OF WINCHESTER, CONTRACTOR SHALL DEMOLISH EXISTING FACILITIES. WORK SHALL BE IN ACCORDANCE WITH SECTIONS 01520 AND 01540.
3. SAW CUT PAVEMENT TO FACILITATE INSTALLATION OF THE NEW WATER LINE. REPLACE PAVEMENT FOLLOWING INSTALLATION.
4. REMOVE AND REPLACE CURB AS REQUIRED TO FACILITATE INSTALLATION OF THE NEW WATER LINE, FENCING, NEW SEWER LINE, AND PUMP STATION. ROLL CURB SHALL BE INSTALLED AT ACCESS GATES FOR EASIER ACCESS. SEE DETAIL 0252802.
5. DRAIN AND DISPOSE CONTENTS OF STRUCTURES IN ACCORDANCE WITH SECTION 01520. REMOVE TOP SLABS AND CONCRETE STRUCTURES TO A DEPTH OF 3-FEET BELOW FINAL GRADE. DEMOLISH EXISTING PIPING AND EQUIPMENT. DRILL 4-INCH HOLES AT 12-INCHES OC IN BOTTOM SLABS FOR DRAINAGE. FILL EXISTING STRUCTURE TO FINAL GRADE WITH #57 STONE.
6. CLEAR AND GRUB ENTIRETY OF SITE WITHIN LIMITS OF DISTURBANCE.

BENCHMARK TABLE

BM #	NORTHING	EASTING	ELEVATION
TRV 1	7115213.59	11585142.31	681.04
TRV 2	7115273.13	11584870.29	688.85
TRV 3	7115306.17	11585077.36	677.25

SCALE: 1" = 20'

20 10 0 20'

REV	ISSUED FOR	DATE	BY
	PERMITTING SUBMITTAL	10/2019	AMF

PROJECT ENGINEER: A. FALLON
DESIGNED BY: S. NASH
DRAWN BY: S. NASH
CHECKED BY: J. PETERY
IF THIS BAR DOES NOT MEASURE 1" THEN DRAWING IS NOT TO FULL SCALE 0 1/2" 1"

CONSTRUCTION SET

COMMONWEALTH OF VIRGINIA
JOEL K. PETERY
Lic. No.036763
02-04-2020
PROFESSIONAL ENGINEER

Hazen
HAZEN AND SAWYER
4035 RIDGE TOP ROAD, SUITE 400
FAIRFAX, VA 22030

CITY OF WINCHESTER
WINCHESTER, VIRGINIA

PENNSYLVANIA AVENUE AND CONWAY
WASTEWATER PUMP STATIONS REPLACEMENT

CIVIL
CONWAY
DEMOLITION AND EROSION AND
SEDIMENT CONTROL

DATE: FEBRUARY 2020
HAZEN NO.: 31294-007/014
CONTRACT NO.:
DRAWING NUMBER: C2-C

PLOT DATE: 2020/02/03 1:06:37 PM BY: ADARNELL
File: G:\31294-RC\31294-014\ENGINEERING\CIVIL\CIVIL\C2-C Saved By: ADARNELL Save Date: 2019/11/14 11:52 AM

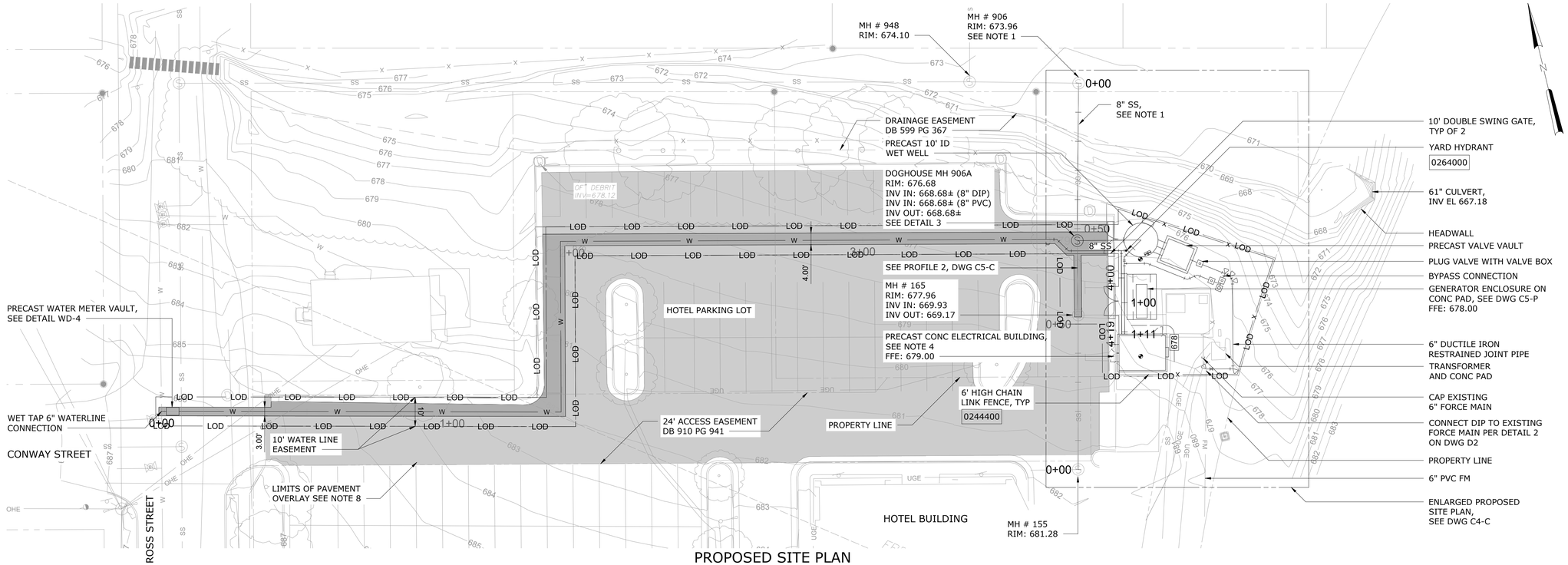

PROPOSED SITE PLAN

SCALE: 1"=20'

NOTES:

1. THE EXISTING SEWER LINE BETWEEN MH 906 AND MH 165 IS CLAY WITH A CIP LINER. CUT VCP BACK TO THE DIAMETER OF THE MANHOLE AND MANHOLE THICKNESS TO ENSURE THE CIPP CONNECTS TO THE NEW MANHOLE STRUCTURE.
2. THE CONTRACTOR IS RESPONSIBLE FOR MANAGING WASTEWATER FLOW DURING OUTAGES PER SECTION 01520.
3. PROVIDE TAPS AND CORP STOPS TO THE NEW WATER LINE FOR TESTING AND SAMPLING AS REQUIRED BY CONTRACT DOCUMENTS AND CITY OF WINCHESTER STANDARDS.
4. MAINTAIN MINIMUM SEPARATION BETWEEN WATER AND SEWER PIPING IN ACCORDANCE WITH CITY OF WINCHESTER STANDARDS.
5. REFER TO ELECTRICAL DRAWINGS FOR CONDUIT LOCATIONS.
6. CONTRACTOR SHALL WORK WITHIN THE LIMITS OF DISTURBANCE. IF ADDITIONAL CONSTRUCTION LAYDOWN AREA IS NECESSARY, CONTRACTOR SHALL TAKE PROPER MEASURES TO OBTAIN A TEMPORARY CONSTRUCTION EASEMENT.
7. CONTRACTOR SHALL PROVIDE 21A STONE, WITH TYPE I SEPARATOR GEOTEXTILE FABRIC UNDERNEATH WITHIN THE ENTIRE FENCE AREA.
8. FULL DEPTH REPAIR OF PAVEMENT WITHIN LIMITS OF TRENCH, ALL OTHER AREAS WITHIN AREA OF PAVEMENT RESTORATION SHOWN SHALL BE MILLED TO A DEPTH OF 1.5 INCHES. AT COMPLETION OF CONSTRUCTION ACTIVITIES, PROVIDE 1.5" SURFACE COURSE OVERLAY OVER ENTIRE AREA OF RESTORATION. IF EXISTING PAVEMENT SECTION IS FOUND TO BE INADEQUATE, FOLLOWING 1.5" SURFACE MILLING, OWNER SHALL DETERMINE IF 1.5" OVERLAY OR FULL DEPTH REPLACEMENT SHALL BE PERFORMED.

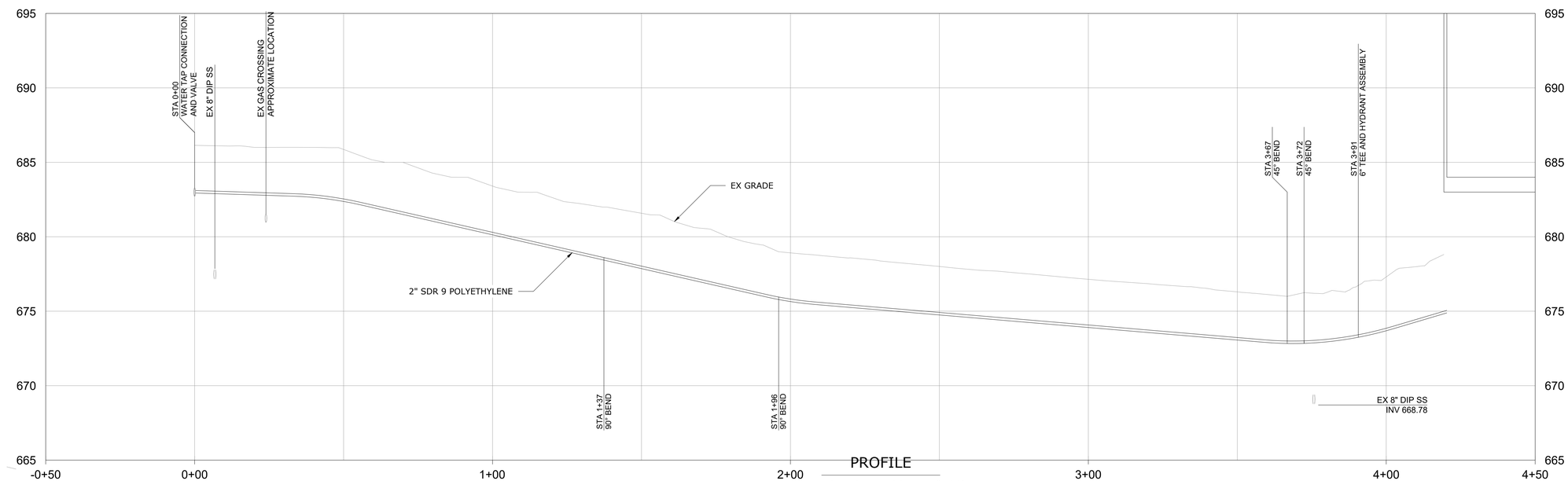

PROFILE

HORIZONTAL SCALE: 1"=20'
VERTICAL SCALE: 1"=2'

SCALE: 1" = 20'

REV	ISSUED FOR	DATE	BY
	PERMITTING SUBMITTAL	10/2019	AMF

PROJECT ENGINEER:	A. FALLON
DESIGNED BY:	S. NASH
DRAWN BY:	S. NASH
CHECKED BY:	J. PETERY

IF THIS BAR DOES NOT MEASURE 1" THEN DRAWING IS NOT TO FULL SCALE (0 1/2" 1")

CONSTRUCTION SET

COMMONWEALTH OF VIRGINIA
JOEL K. PETERY
Lic. No.036763
02-04-2020
PROFESSIONAL ENGINEER

Hazen

HAZEN AND SAWYER
4035 RIDGE TOP ROAD, SUITE 400
FAIRFAX, VA 22030

CITY OF WINCHESTER
WINCHESTER, VIRGINIA

PENNSYLVANIA AVENUE AND CONWAY
WASTEWATER PUMP STATIONS REPLACEMENT

CIVIL
CONWAY
PROPOSED SITE CONDITIONS
AND WATER PROFILE

DATE: FEBRUARY 2020
HAZEN NO.: 31294-007/014
CONTRACT NO.:
DRAWING NUMBER: C3-C

PLOT DATE: 2020/02/03 1:08:42 PM BY: ADARNELL
File: G:\31294-RC\31294-014\ENGINEERING\CIVIL\CIVIL\C3-C Saved By: ADARNELL Save Date: 2019/11/19 11:24 AM

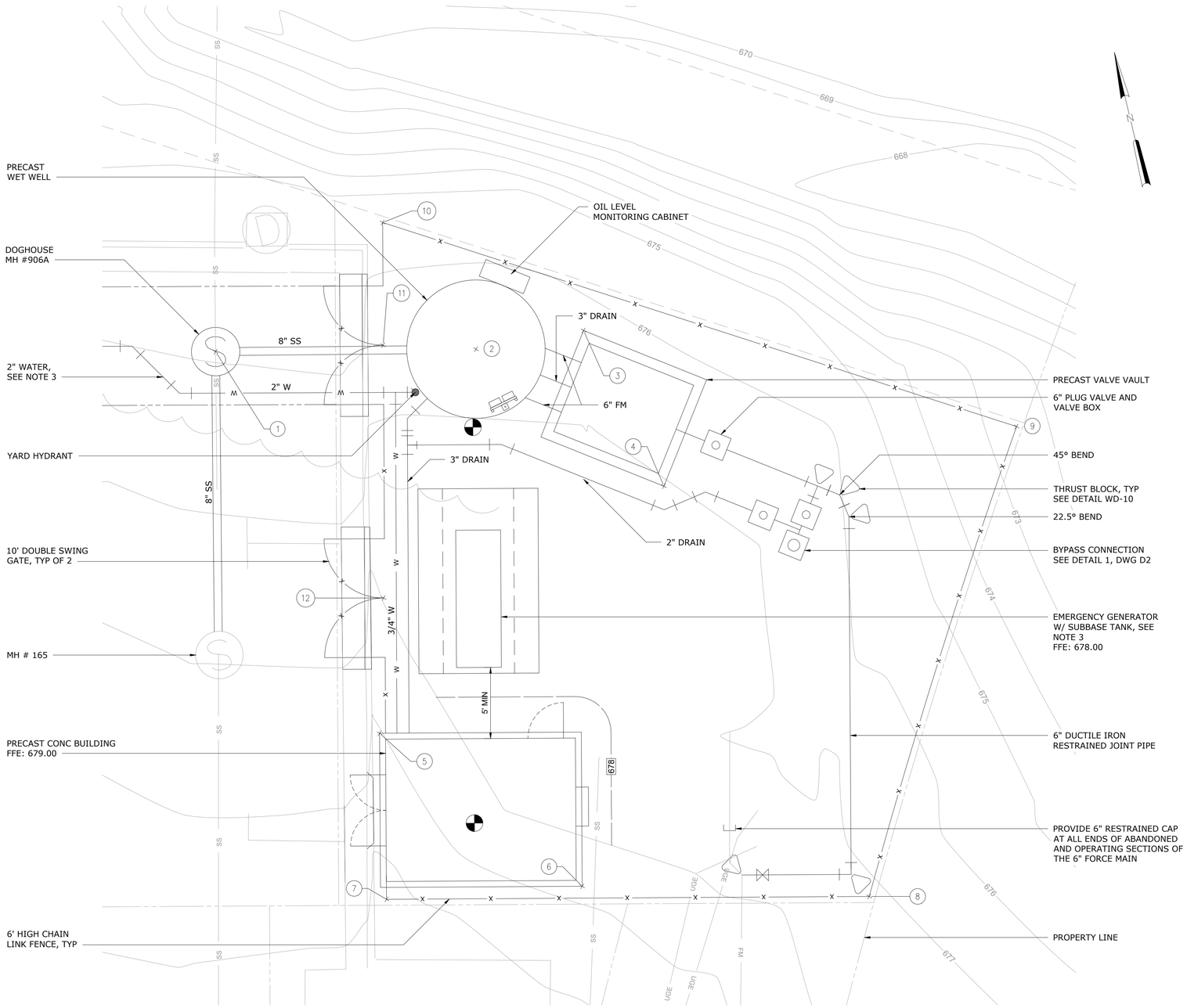

ENLARGED PROPOSED SITE PLAN

SCALE: 1"=5'

NOTES:

1. CONTRACTOR SHALL COORDINATE EQUIPMENT PAD SIZE WITH THE GENERATOR MANUFACTURER. THE PAD SHALL BE MODIFIED AS REQUIRED FOR THE ACTUAL GENERATOR PROVIDED, REFER TO STANDARD DETAIL 0331607R.

STAKING TABLE

POINT #	NORTHING	EASTING	DESCRIPTION
1	7115286.61	11585158.68	MH-906A
2	7115281.70	11585180.07	WET WELL
3	7115281.12	11585189.26	VALVE VAULT
4	7115266.78	11585192.78	VALVE VAULT
5	7115252.10	11585164.63	ELEC BLDG
6	7115235.57	11585178.22	ELEC BLDG
7	7115238.35	11585161.93	FENCE
8	7115229.10	11585201.55	FENCE
9	7115264.74	11585222.86	FENCE
10	7115293.92	11585174.92	FENCE
11	7115283.85	11585172.55	GATE
12	7115263.11	11585167.62	GATE

5 2.5 0 5'

REV	ISSUED FOR	DATE	BY
	PERMITTING SUBMITTAL	10/2019	AMF

PROJECT ENGINEER: A. FALLON
DESIGNED BY: E. PROSSER
DRAWN BY: E. PROSSER
CHECKED BY: J. PETERY

IF THIS BAR DOES NOT MEASURE 1" THEN DRAWING IS NOT TO FULL SCALE 0 1/2" 1"

CONSTRUCTION SET

COMMONWEALTH OF VIRGINIA
JOEL K. PETERY
Lic. No.036763
02-04-2020
PROFESSIONAL ENGINEER

Hazen
HAZEN AND SAWYER
4035 RIDGE TOP ROAD, SUITE 400
FAIRFAX, VA 22030

CITY OF WINCHESTER
WINCHESTER, VIRGINIA

PENNSYLVANIA AVENUE AND CONWAY
WASTEWATER PUMP STATIONS REPLACEMENT

CIVIL
CONWAY
ENLARGED SITE & STAKING PLAN

DATE: FEBRUARY 2020
HAZEN NO.: 31294-007/014
CONTRACT NO.:
DRAWING NUMBER: C4-C

PLOT DATE: 2020/02/03 1:10:32 PM BY: ADARNELL Saved By: ADARNELL Save Date: 2019/11/19 11:24 AM
File: G:\31294-RC\31294-014\ENGINEERING\CIVIL\CIVIL\C4-C

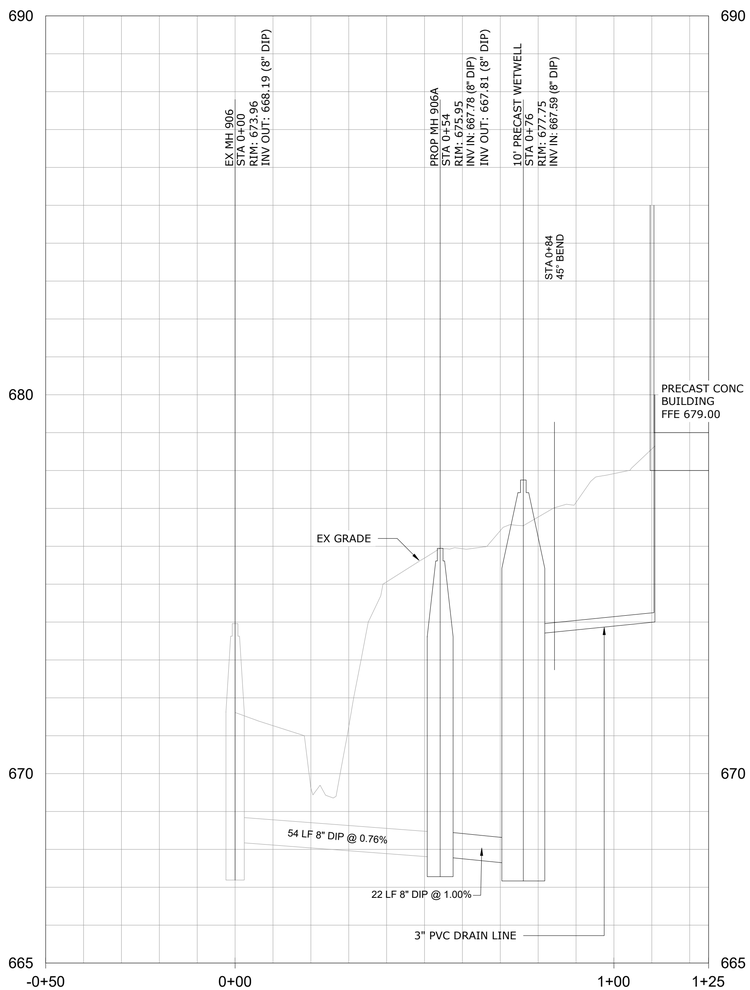

PROFILE 1
H: 1"=20' V: 1"=2'

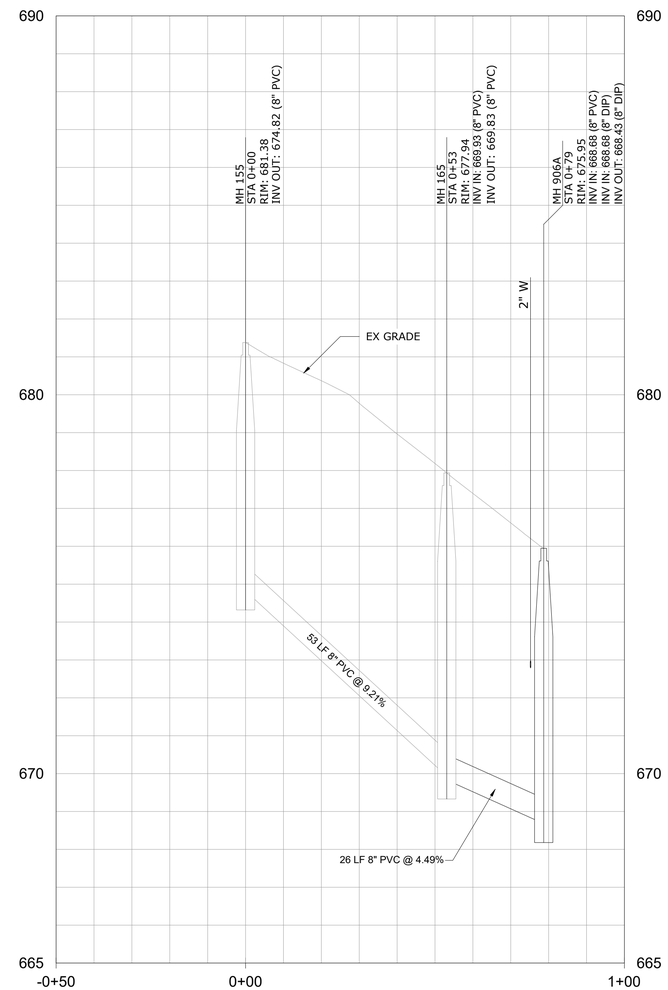

PROFILE 2
H: 1"=20' V: 1"=2'

NOTES:

1. CONTRACTOR SHALL MODIFY ELEVATIONS AND ROUTING OF NEW WATERLINE AND FORCE MAIN PIPING BASED ON VERIFIED LOCATIONS OF EXISTING UTILITIES. NEW PIPING SHALL BE INSTALLED IN ACCORDANCE WITH THE CITY OF WINCHESTER STANDARDS.
2. CONTRACTOR SHALL VERIFY LOCATION OF EXISTING UTILITIES AND SHALL PERFORM TEST PITS AS REQUIRED FOR WORK. CONFLICTS SHALL BE BROUGHT TO THE ATTENTION OF THE OWNER AND ENGINEER. CONTRACTOR SHALL MODIFY WORK AS REQUIRED FOR INSTALLATION OF NEW FACULTIES.

HORIZONTAL SCALE: 1" = 20'
20 10 0 20'
2 1 0 2
VERTICAL SCALE: 1"=2'

REV	ISSUED FOR	DATE	BY
	PERMITTING SUBMITTAL	10/2019	AMF

PROJECT ENGINEER:	A. FALLON
DESIGNED BY:	S. NASH
DRAWN BY:	S. NASH
CHECKED BY:	J. PETERY
IF THIS BAR DOES NOT MEASURE 1" THEN DRAWING IS NOT TO FULL SCALE	0 1/2" 1"

CONSTRUCTION SET

COMMONWEALTH OF VIRGINIA
JOEL K. PETERY
Lic. No.036763
02-04-2020
PROFESSIONAL ENGINEER

Hazen
HAZEN AND SAWYER
4035 RIDGE TOP ROAD, SUITE 400
FAIRFAX, VA 22030

CITY OF WINCHESTER
WINCHESTER, VIRGINIA

PENNSYLVANIA AVENUE AND CONWAY
WASTEWATER PUMP STATIONS REPLACEMENT

CIVIL
CONWAY
PROFILES - SHEET 1

DATE:	FEBRUARY 2020
HAZEN NO.:	31294-007/014
CONTRACT NO.:	
DRAWING NUMBER:	C5-C

PLOT DATE: 2020/02/03 1:12:15 PM BY: ADARNELL
File: G:\31294-RIC\31294-014\ENGINEERING\CIVIL\CIVIL\C5-C Saved By: ADARNELL Save Date: 2019/11/14 1:24 PM

NOTES:

1. STAINLESS STEEL GUIDE RAIL BRACKETS SHALL INCLUDE STAINLESS STEEL HOOK FOR PUMP REMOVAL CHAIN. THE PUMP REMOVAL CHAIN SHALL BE EASILY ACCESSIBLE FROM THE HATCH OPENING AND NOT REQUIRE CONFINED SPACE ENTRY.
2. PUMP POWER AND CONTROL CABLES SHALL BE SUPPORTED BY STAINLESS STEEL EYE BOLTS OR FROM GUIDE RAIL BRACKETS. STAINLESS STEEL WIRE STRAIN RELIEF SHALL BE PROVIDED. THE PUMP CABLE CONNECTION SHALL BE EASILY ACCESSIBLE FROM THE HATCH OPENING AND NOT REQUIRE CONFINED SPACE ENTRY.
3. PUMP OIL TUBING SHALL BE SUPPORTED BY STAINLESS STEEL EYE BOLTS OR FROM GUIDE RAIL BRACKETS. STAINLESS STEEL WIRE STRAIN RELIEF SHALL BE PROVIDED. THE OIL TUBING SHALL BE EASILY ACCESSIBLE FROM THE HATCH OPENING AND NOT REQUIRE CONFINED SPACE ENTRY. PUMP OIL RESERVOIR SHALL BE MOUNTED IN A STAINLESS STEEL CABINET ABOVE GRADE IN ACCORDANCE WITH MANUFACTURES RECOMMENDATIONS.
4. PIPE SUPPORTS NOT SHOWN. PROVIDE PIPE SUPPORTS PER SECTION 15020.
5. THE BOTTOM SLAB OF THE PRECAST CONCRETE VALVE VAULT SHALL BE SLOPED TOWARDS THE VAULT SUMP.
6. DIMENSIONS SHOWN SHALL BE THE MINIMUM INTERIOR DIMENSIONS FOR THE PRECAST CONCRETE STRUCTURE. DESIGN OF PRECAST BUILDING INCLUDING SUPPORT OF ALL APPURTENANCES AND INCLUSION OF ALL OPENING SHALL BE THE EXCLUSIVE RESPONSIBILITY OF THE PRECAST CONCRETE STRUCTURE MANUFACTURER IN ACCORDANCE WITH SECTION 02604-UTILITY STRUCTURES AND 03400-PRECAST CONCRETE. SUBMIT ERECTION DRAWINGS INCLUDING OPENINGS AND ATTACHMENT OF APPURTENANCES SEALED BY A CURRENTLY REGISTERED PROFESSIONAL ENGINEER IN THE COMMONWEALTH OF VIRGINIA.
7. DAVIT CRANE BASE TO SHALL BE ADMIRAL 3000 AS MANUFACTURED BY THERN, PEDESTAL BASE 5PT30.
8. PRECAST WETWELL AND TOP SLAB SHALL BE DESIGNED ACCOUNTING FOR DAVIT CRANE SECURED INTO THE BASE TO BE HOLDING 1400 LBS AT A HORIZONTAL DISTANCE OF 9 FEET.
9. CONTRACTOR SHALL COORDINATE TOP SLAB REINFORCEMENT AND DRAINAGE WITH APPROVED ACCESS DOOR. ACCESS DOOR DRAIN SHALL BE PIPED TO THE SUMP.
10. VALVE BODY SHALL BE SUPPORTED FROM WALL. AIR RELEASE VALVE DRIP PIPE SHALL BE EXTENDED WITH PVC DOWN TO 12" ABOVE FLOOR OF VAULT. THE DRIP PIPE DIAMETER SHALL BE EQUAL TO OR GREATER THAN T VALVE AIR ORIFICE DIAMETER. THE DRIP PIPE SHALL BE OPEN TO THE ATMOSPHERE.

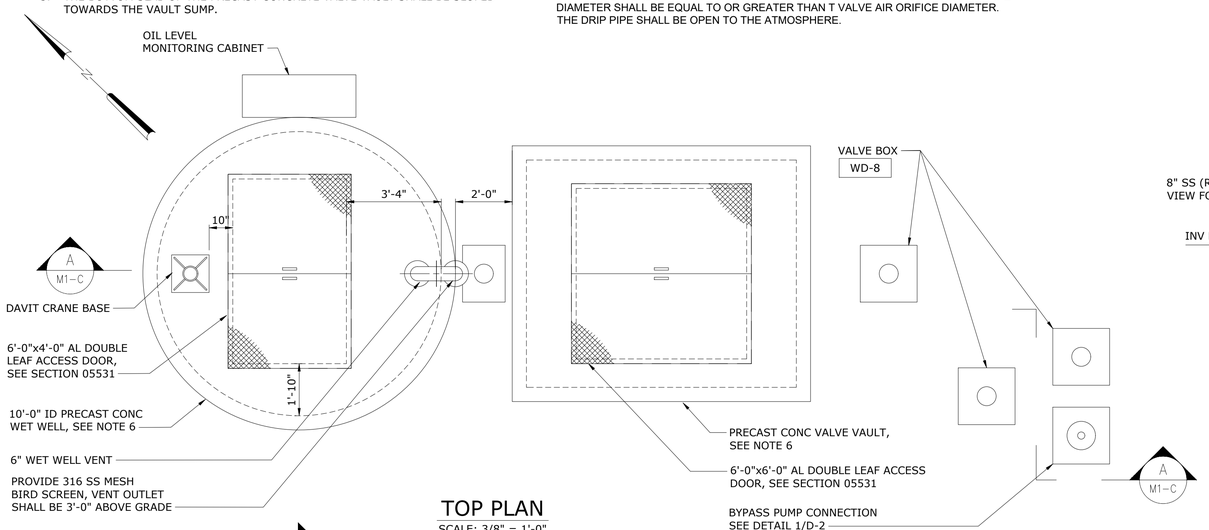

TOP PLAN
SCALE: 3/8" = 1'-0"

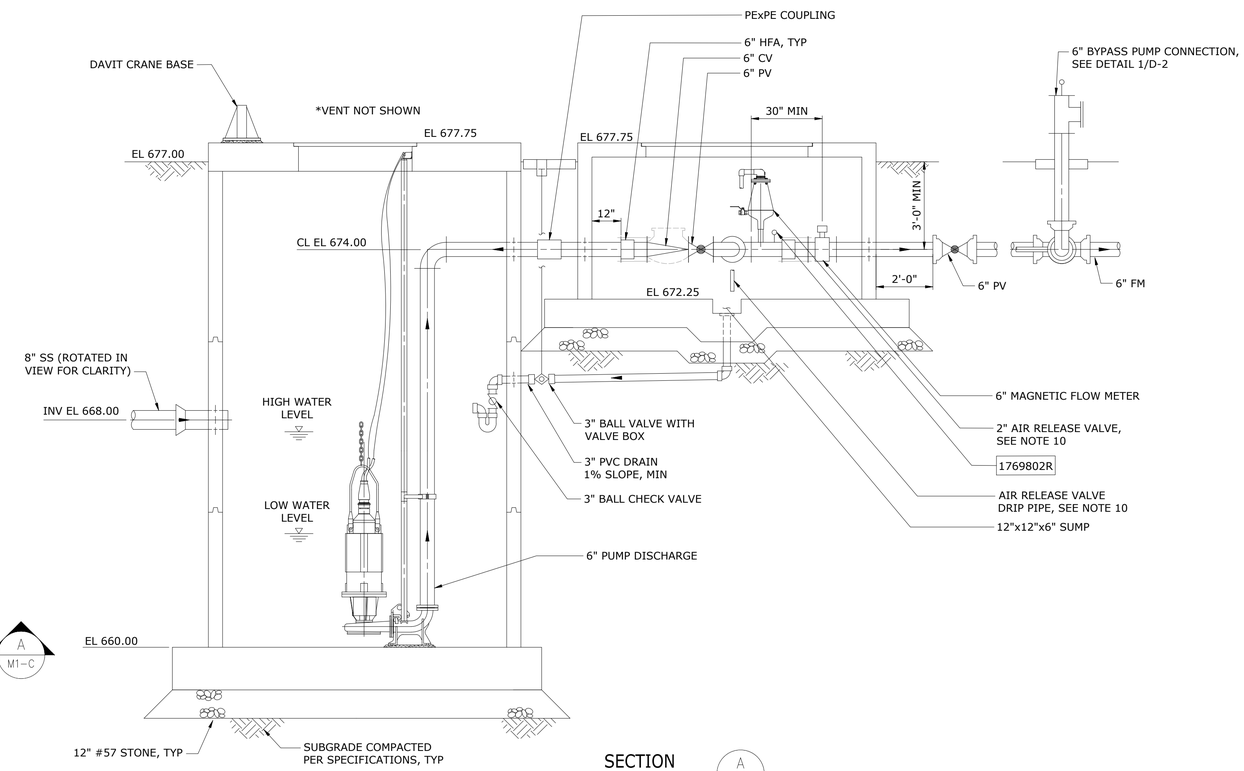

SECTION A M1-C
SCALE: 3/8" = 1'-0"

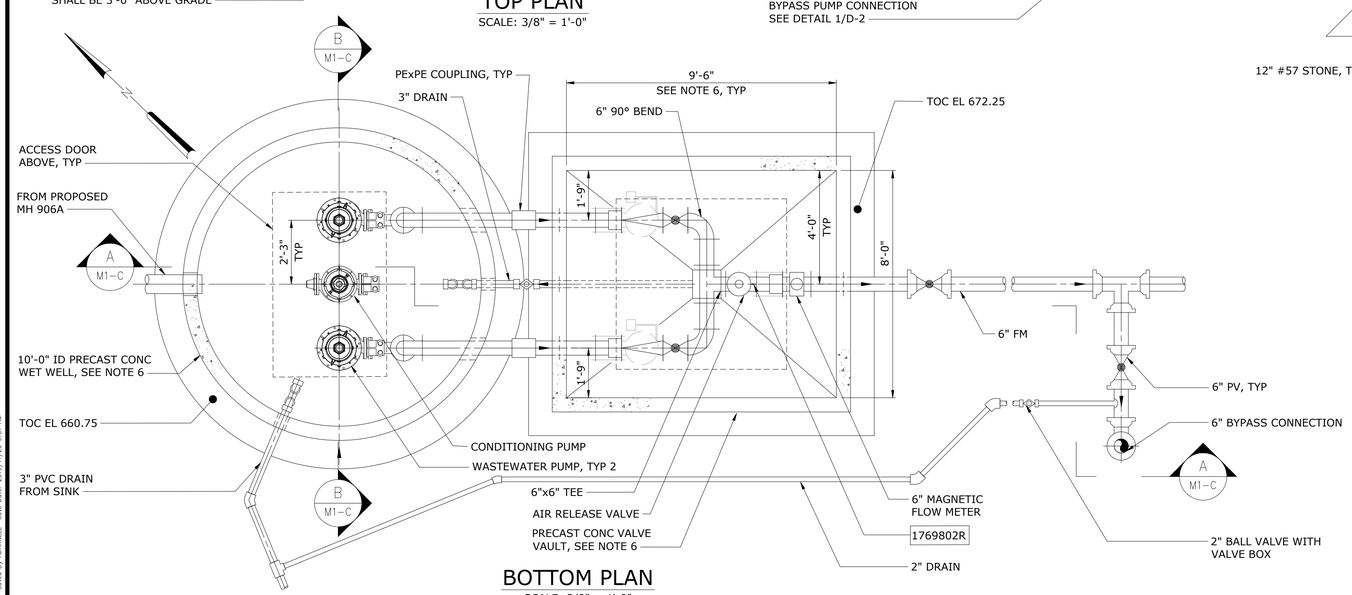

BOTTOM PLAN
SCALE: 3/8" = 1'-0"

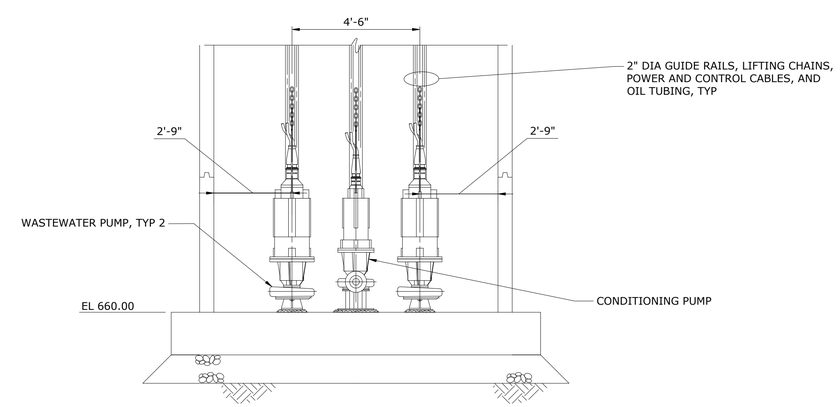

SECTION B M1-C
SCALE: 3/8" = 1'-0"

REV	ISSUED FOR	DATE	BY
	PERMITTING SUBMITTAL	10/2019	AMF

PROJECT ENGINEER: A. FALLON
DESIGNED BY: N. McDERMOTT
DRAWN BY: P. VANGORDEN
CHECKED BY: J. PETERY

IF THIS BAR DOES NOT MEASURE 1" THEN DRAWING IS NOT TO FULL SCALE (0 — 1/2" — 1")

CONSTRUCTION SET

COMMONWEALTH OF VIRGINIA — AGATA M. NAWROCKI — Lic. No.36934 — 02-04-2020 — PROFESSIONAL ENGINEER

Hazen
HAZEN AND SAWYER
4035 RIDGE TOP ROAD, SUITE 400
FAIRFAX, VA 22030

CITY OF WINCHESTER
WINCHESTER, VIRGINIA

PENNSYLVANIA AVENUE AND CONWAY
WASTEWATER PUMP STATIONS REPLACEMENT

MECHANICAL
CONWAY
WWPS PLANS AND SECTIONS

DATE: FEBRUARY 2020
HAZEN NO.: 31294-007/014
CONTRACT NO.:
DRAWING NUMBER: M1-C

PLOT DATE: 2020/02/03 1:13:16 PM BY: ADARNELL File: Q:\31294-RIC\31294-014\ENGINEERING\CIVIL\MECH\M-1 Saved By: ADARNELL Save Date: 2019/11/20 9:31 AM

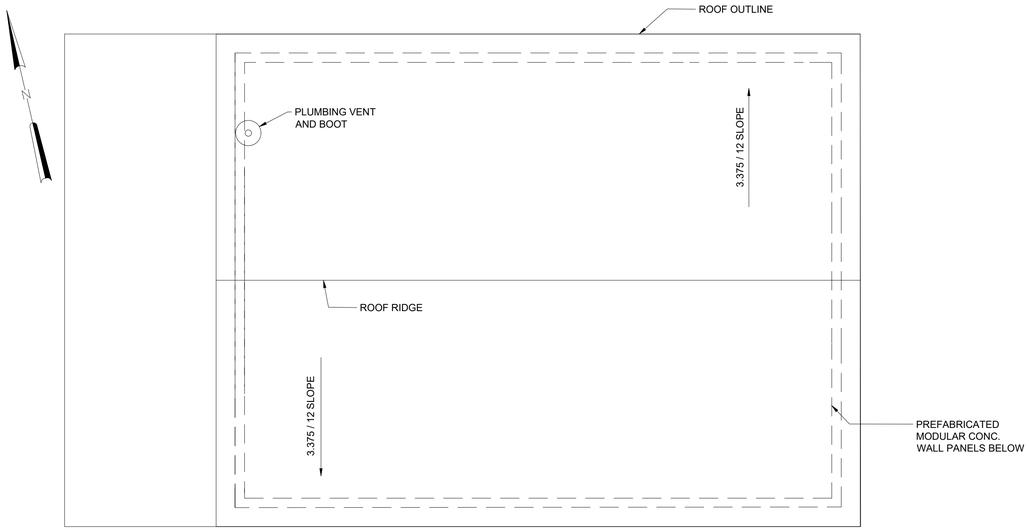

ROOF PLAN

SCALE: 1/2" = 1'-0"

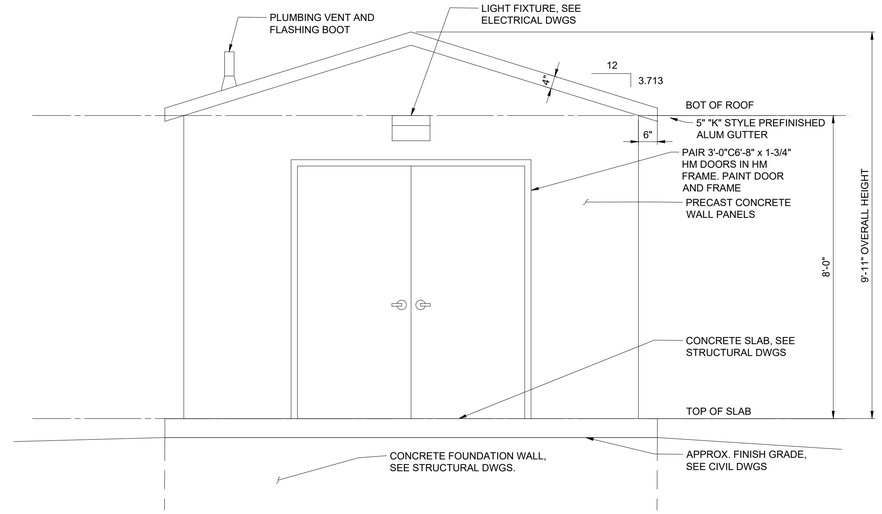

WEST ELEVATION (EAST ELEV. SIMILAR WITHOUT DOORS)

1/2" = 1'-0"

NOTES:

1. ALL DIMENSIONS AND CONSTRUCTION DETAILS ARE PER "EASI-SET WORLDWIDE" MODULAR BUILDINGS.
2. CONTRACTOR SHALL COORDINATE ALL REQUIRED OPENING SIZES AND LOCATIONS WITH OTHER VENDORS AND INDICATE ON SHOP DRAWING SUBMITTALS PRIOR TO FABRICATION OF THE MODULAR BUILDING.
3. DOORS SHALL BE HOLLOW METAL IN A HOLLOW METAL FRAME COMPLETE WITH ALL HARDWARE AS SPECIFIED. BOTH DOORS SHALL OPEN 180 DEGREES. DOORS AND FRAMES SHALL BE PAINTED.
4. CONTRACTOR AND MODULAR BUILDING MANUFACTURER SHALL COORDINATE CONCRETE SLAB CONSTRUCTION WITH STRUCTURAL DRAWINGS.
5. MODULAR BUILDING VENDOR SHALL DESIGN ALL WALL PANELS TO SUPPORT HVAC AND ELECTRICAL EQUIPMENT.
6. FURNISH DOOR BOTTOM SEALS AND ALUM. THRESHOLDS AT ALL EXTERIOR DOOR LOCATIONS.
7. SINGLE PERSONNEL DOOR SHALL BE HOLLOW METAL IN A HOLLOW METAL FRAME. PAINT DOOR AND FRAME.
8. PROVIDE WHERE INDICATED ON DRAWINGS, 10 LB. CAPACITY, HAND PORTABLE FIRE EXTINGUISHER WITH WALL MOUNT, TRI-CLASS DRY CHEMICAL TYPE, WITH UNDERWRITERS' LABORATORIES RATING OF 4-A: 60 BC.
8. PROVIDE 2" FRP COATED INSULATED PANELS ON WALLS AND CEILING. PANELS SHALL BE AS MANUFACTURED BY PERMATHON OR EQUAL. PROVIDE TRIM AT DOORS AND OTHER PENETRATIONS.
9. DIMENSIONS SHOWN SHALL BE THE MINIMUM INTERIOR DIMENSION FOR THE PRECAST CONCRETE ELECTRICAL BUILDING. DESIGN OF PRECAST BUILDING, INCLUDING SUPPORT OF ALL APPURTENANCES AND OPENINGS, SHALL BE THE EXCLUSIVE RESPONSIBILITY OF THE PRECAST BUILDING MANUFACTURER IN ACCORDANCE WITH SECTION 03452 - ARCHITECTURAL PRECAST CONCRETE UTILITY BUILDINGS. SUBMIT ERECTION DRAWINGS, INCLUDING OPENINGS AND ATTACHMENT OF APPURTENANCES, SEALED BY A CURRENTLY REGISTERED PROFESSIONAL ENGINEER IN THE COMMONWEALTH OF VIRGINIA.

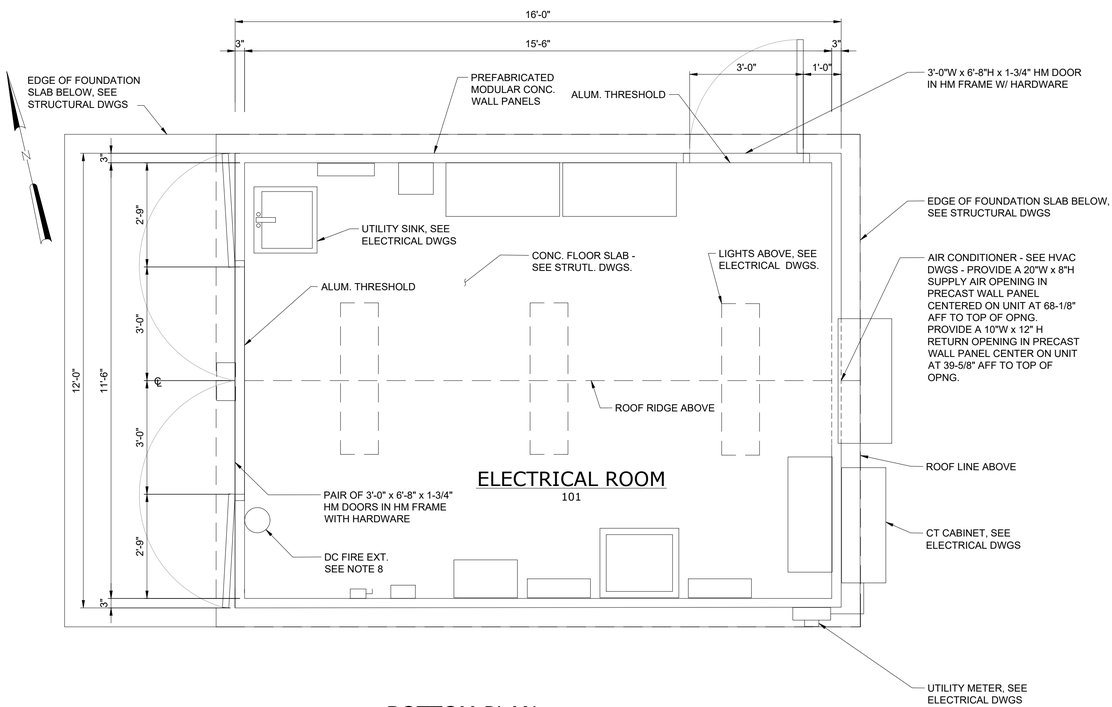

BOTTOM PLAN

SCALE: 1/2" = 1'-0"

SEE ELECTRICAL DRAWINGS FOR ELECTRICAL EQUIPMENT.

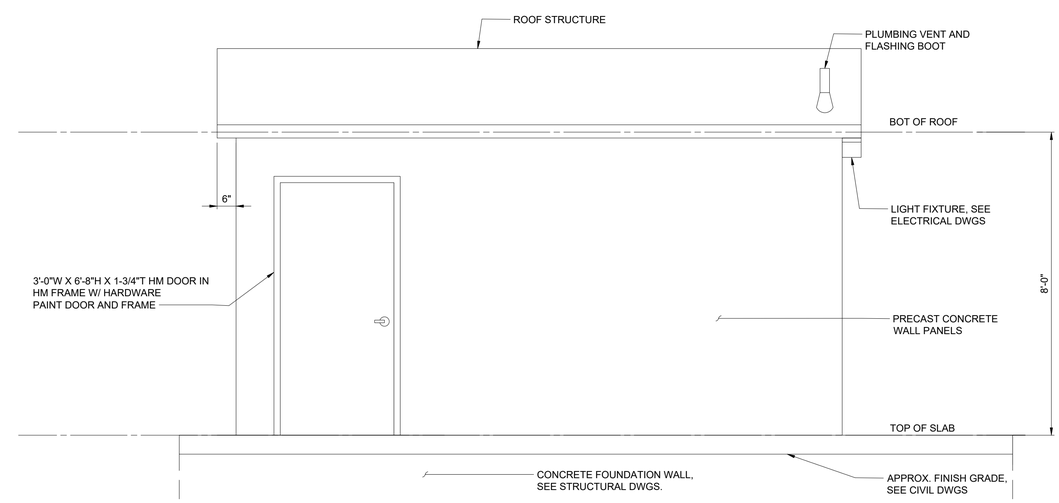

NORTH ELEVATION (SOUTH ELEV. OPPOSITE HAND WITH NO PERSONNEL DOOR)

1/2" = 1'-0"

1/2"=1'-0" 12" 0 1 3'

REV	ISSUED FOR	DATE	BY
	PERMITTING SUBMITTAL	10/2019	AMF

PROJECT ENGINEER:	A. FALLON
DESIGNED BY:	E. PROSSER
DRAWN BY:	R. HAWKINS
CHECKED BY:	W. RUSSELL
IF THIS BAR DOES NOT MEASURE 1" THEN DRAWING IS NOT TO FULL SCALE	0 1/2" 1"

CONSTRUCTION SET

COMMONWEALTH OF VIRGINIA
WILLIAM H. RUSSELL
Lic. No. 8532
02-04-2020
ARCHITECT

Hazen

HAZEN AND SAWYER
4035 RIDGE TOP ROAD, SUITE 400
FAIRFAX, VA 22030

CITY OF WINCHESTER
WINCHESTER, VIRGINIA

PENNSYLVANIA AVENUE AND CONWAY
WASTEWATER PUMP STATIONS REPLACEMENT

ARCHITECTURAL
CONWAY
ELECTRICAL BUILDING
PLANS AND ELEVATIONS

DATE: FEBRUARY 2020
HAZEN NO.: 31294-007/014
CONTRACT NO.:
DRAWING NUMBER: A1-C

PLOT DATE: 2020/02/03 1:12:38 PM BY: ADAWNELL
File: Q:\31294-RC\31294-014\ENGINEERING\CIVIL\ARCH\A-1-C Saved By: RHAWKINS Save Date: 2019/11/19 4:02 PM

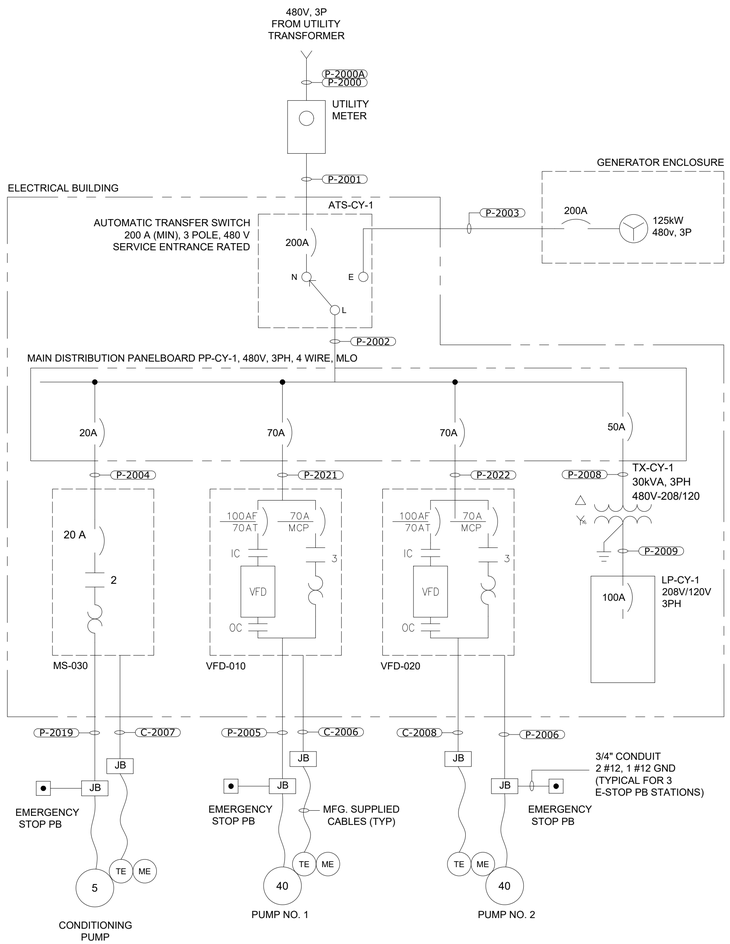

CONWAY PUMP STATION ONE-LINE DIAGRAM

NO SCALE

CONDUIT NO.	SIZE	FROM	TO	CONDUCTORS	REMARKS
P-2000	4"	UTILITY TRANSFORMER	UTILITY METER	BY UTILITY	
P-2000A	4"	UTILITY TRANSFORMER	UTILITY METER	SPARE	
P-2001	4"	UTILITY METER	TRANSFER SWITCH ATS-CY-1	4#3/0,#6 GND	
P-2002	2"	TRANSFER SWITCH ATS-CY-1	POWER PANEL PP-CY-1	4#3/0,#6 GND	
P-2003	2"	TRANSFER SWITCH ATS-CY-1	GENERATOR MAIN BREAKER	4#3/0,#6 GND	
P-2004	1"	POWER PANEL PP-CY-1	CONDITIONING PUMP MOTOR STARTER(MS-030)	3#1, #6 GND	
P-2005	1-1/4"	VARIABLE FREQUENCY DRIVE (VFD-010)	SEWAGE PUMP NO. 1 (P-010)	3#4,2#12, 1#8 GND	
P-2006	1-1/4"	VARIABLE FREQUENCY DRIVE (VFD-020)	SEWAGE PUMP NO. 2(P-020)	3#4,2#12, 1#8 GND	
P-2007				NOT USED	
P-2008	1"	POWER PANEL PP-CY-1	TRANSFORMER TX-CY-1	3#6,#10 GND	
P-2009	1-1/4"	TRANSFORMER TX-CY-1	LIGHTING PANEL LP-CY-1	3#2, #8 GND	
P-2010	3/4"	LIGHTING PANEL LP-CY-1	SCADA/PLC PANEL	2#12, 1#12 GND	
P-2011	3/4"	LIGHTING PANEL LP-CY-1	FLOW TRANSMITTER FIT-050	2#12, 1#12 GND	
P-2012	3/4"	LIGHTING PANEL LP-CY-1	LEVEL TRANSMITTER LIT-001	2#12, 1#12 GND	
P-2013	3/4"	LIGHTING PANEL LP-CY-1	GENERATOR BLOCK HEATER	3#12, 1#12 GND	
P-2014	3/4"	LIGHTING PANEL LP-CY-1	GENERATOR CONTROL PANEL	2#12, 1#12 GND	
P-2015	3/4"	LIGHTING PANEL LP-CY-1	GENERATOR BATTERY CHARGER	2#12, 1#12 GND	
P-2016	3/4"	LIGHTING PANEL LP-CY-1		NOT USED	
P-2017				NOT USED	
P-2018	3/4"	LIGHTING PANEL LP-CY-1	INSTANT WATER HEATER	2#8, #10 GND	VIA DISCONNECT DSW-IWH
P-2019	1 1/2"	CONDITIONING PUMP MOTOR STARTER(MS-030)	JB BY WET WELL	3#12,2#12, 1#12 GND	
P-2020	3/4"	LIGHTING PANEL LP-CY-1	UNIT HEATER CY-EUH-1	3#12, 1#12 GND	
P-2021	1-1/4"	POWER PANEL PP-CY-1	VARIABLE FREQUENCY DRIVE (VFD-010)	3#4, 1#8 GND	
P-2022	1-1/4"	POWER PANEL PP-CY-1	VARIABLE FREQUENCY DRIVE (VFD-020)	3#4, 1#8 GND	

CONDUIT NO.	SIZE	FROM	TO	CONDUCTORS	REMARKS
C-2001	1"	PUMP NO. 1 VFD (VFD-010)	SCADA/PLC PANEL	22#14, 1#14 GND	4 SPARE
C-2002	3/4"	OIL FILL ENCLOSURE	SCADA/PLC PANEL	6#14, 1#14 GND	
C-2003	1"	PUMP NO. 2 VFD (VFD-020)	SCADA/PLC PANEL	22#14, 1#14 GND	4 SPARE
C-2004	3/4"	SCADA RTU	AUTOMATIC TRANSFER SWITCH ATS-PA-1	4#12, 1#14	
C-2005	3/4"	GENERATOR CONTROL PANEL	AUTOMATIC TRANSFER SWITCH ATS-PA-1	6#14, 1#14 GND	
C-2006	1 1/2"	PUMP NO. 1 VFD (VFD-010)	JB AT WET WELL	2-#16 TSP; 12#14; 1#14 GND	PUMP NO. 1 PROTECTIVE DEV.
C-2007	1 1/2"	CONDITIONING PUMP STARTER (MS-030)	JB AT WET WELL	1-#16 TSP; 12#14; 1#14 GND	COND PUMP PROT. DEV.
C-2008	1 1/2"	PUMP NO. 2 VFD (VFD-020)	JB AT WET WELL	2-#16 TSP; 12#14; 1#14 GND	PUMP NO. 2 PROTECTIVE DEV.
C-2009	3/4"	CONDITIONING PUMP STARTER (MS-030)	SCADA/PLC PANEL	8#14, 1#14 GND	
C-2010	1"	MV FLOODED LEVEL SWITCH LSH-055	SCADA/PLC PANEL	3#14, 1#14 GND	
I-2001	3/4"	FLOW TRANSMITTER FIT-050	SCADA/PLC PANEL	1#16 TSP, 1 #14 GND	
I-2002	3/4"	LEVEL TRANSMITTER LIT-001	SCAD/PLC PANEL	2#16 TSP, 1 #14 GND	
I-2003	3/4"	LEVEL TRANSMITTER LIT-001	LEVEL SENSOR LE-001	MFG CABLE	
I-2004	3/4"	FLOW TRANSMITTER FIT-050	FLOW SENSOR FE-050	MFG CABLE	
I-2005	3/4"	PUMP NO. 1 VFD (VFD-010)	SCADA/PLC PANEL	2#16 TSP, 1 #14 GND	
I-2006	3/4"	PUMP NO. 2 VFD (VFD-020)	SCADA/PLC PANEL	2#16 TSP, 1 #14 GND	
I-2007	1"	LEVEL SENSOR PE/LT-002	SCADA/PLC PANEL	1#16 TSP, 1 #14 GND	

208/120 VOLTS
3 PHASE, 4 WIRE

LP-CY-1
MAIN BREAKER
100A 3P

TYPE: NEMA 12
MOUNT: SURFACE

MODS	DESCRIPTION	WIRE	TRIP	POLE	No.	VOLT-AMPERES A	VOLT-AMPERES B	VOLT-AMPERES C	VOLT-AMPERES A	VOLT-AMPERES B	VOLT-AMPERES C	No.	POLE	TRIP	WIRE	DESCRIPTION	MODS
-	CONTROL BUILDING LIGHTS	NOTE 1	20	1	1	250			1,000			2					
GFCI	CONTROL BLDG RECEPTACLES	NOTE 1	20	1	3		540			1,000		4	3	20	P-2013	GENERATOR BLOCK HEATER	
-	SPARE		20	1	5			-			1,000	6					
	SPARE		20	1	7	-			500			8	1	20	P-2014	GENERATOR CONTROL PANEL	
-	SCADA PANEL	P-2010	20	1	9		500			750		10	1	20	P-2014	GENERATOR BATT. CHARGER	
-	EXTERIOR LIGHTING	NOTE 1	20	1	11			700			-	12	1	20		SPARE	
	SPARE		20	1	13	-			-			14					
	A/C UNIT	P-2020	40	2	15		4,540			-		16	3	20		SPARE	
					17			4,540			-	18					
	SPARE		20	3	19	-			-			20	1	20		SPARE	
					21		-			-		22	1	20		SPARE	
					23			-			-	24	1	20		SPARE	
-	FLOW TRANSMITTER	P-2011	20	1	25	100			3,500			26	1	20	P-2018	INST. WATER HEATER	GFCI
-	LEVEL TRANSMITTER	P-2012	20	1	27		100			-		28	1	20		SPARE	-
-	SCADA/PLC	P-2019	20	1	27			500			-	28	1	20		SPARE	-
-	SPARE		20	1	29	-						30	1	20		SPARE	-

TOTAL	350	5,680	5,740	5,000	1,750	1,000	TOTAL
	PHASE TOTAL			TOTAL LOAD (VA)			
	5,350	7,430	6,740	19,520			
				TOTAL LOAD (A)			
				54			

MODIFICATION (MODS) LEGEND:
GFCI - GROUND FAULT CIRCUIT INTERRUPTER
LOD - LOCK-ON DEVICE
LFD - LOCK-OFF DEVICE

NOTES:
22K AIC
100kA SPD

NOTES:

1. ALL LIGHTING AND RECEPTACLE CIRCUITS SHALL BE 2-#12, 1-#12 GROUND IN A 3/4" CONDUIT UNLESS OTHERWISE SPECIFIED.

REV	ISSUED FOR	DATE	BY
	PERMITTING SUBMITTAL	10/2019	AMF

PROJECT ENGINEER: A. FALLON
DESIGNED BY: D. WEBER
DRAWN BY: P. VANGORDEN
CHECKED BY: E. FRANCOIS

IF THIS BAR DOES NOT MEASURE 1" THEN DRAWING IS NOT TO FULL SCALE 0 1/2" 1"

CONSTRUCTION SET

COMMONWEALTH OF VIRGINIA
EVERSLEY A. FRANCOIS
Lic. No. 57149
02-04-2020
PROFESSIONAL ENGINEER

Hazen
HAZEN AND SAWYER
4035 RIDGE TOP ROAD, SUITE 400
FAIRFAX, VA 22030

CITY OF WINCHESTER
WINCHESTER, VIRGINIA

PENNSYLVANIA AVENUE AND CONWAY
WASTEWATER PUMP STATIONS REPLACEMENT

ELECTRICAL
CONWAY
ONE-LINE DIAGRAM, CABLE
SCHEDULES, ELEMENTARY DIAGRAM

DATE: FEBRUARY 2020
HAZEN NO.: 31294-007/014
CONTRACT NO.:
DRAWING NUMBER: E1-C

PLOT DATE: 2020/02/03 1:18:48 PM BY: AMARNELL
File: Q:\31294-RIC\31294-014\ENGINEERING\CIVIL\LEC\E-1-C Saved By MBROCATO Save Date: 2019/11/25 2:04 PM

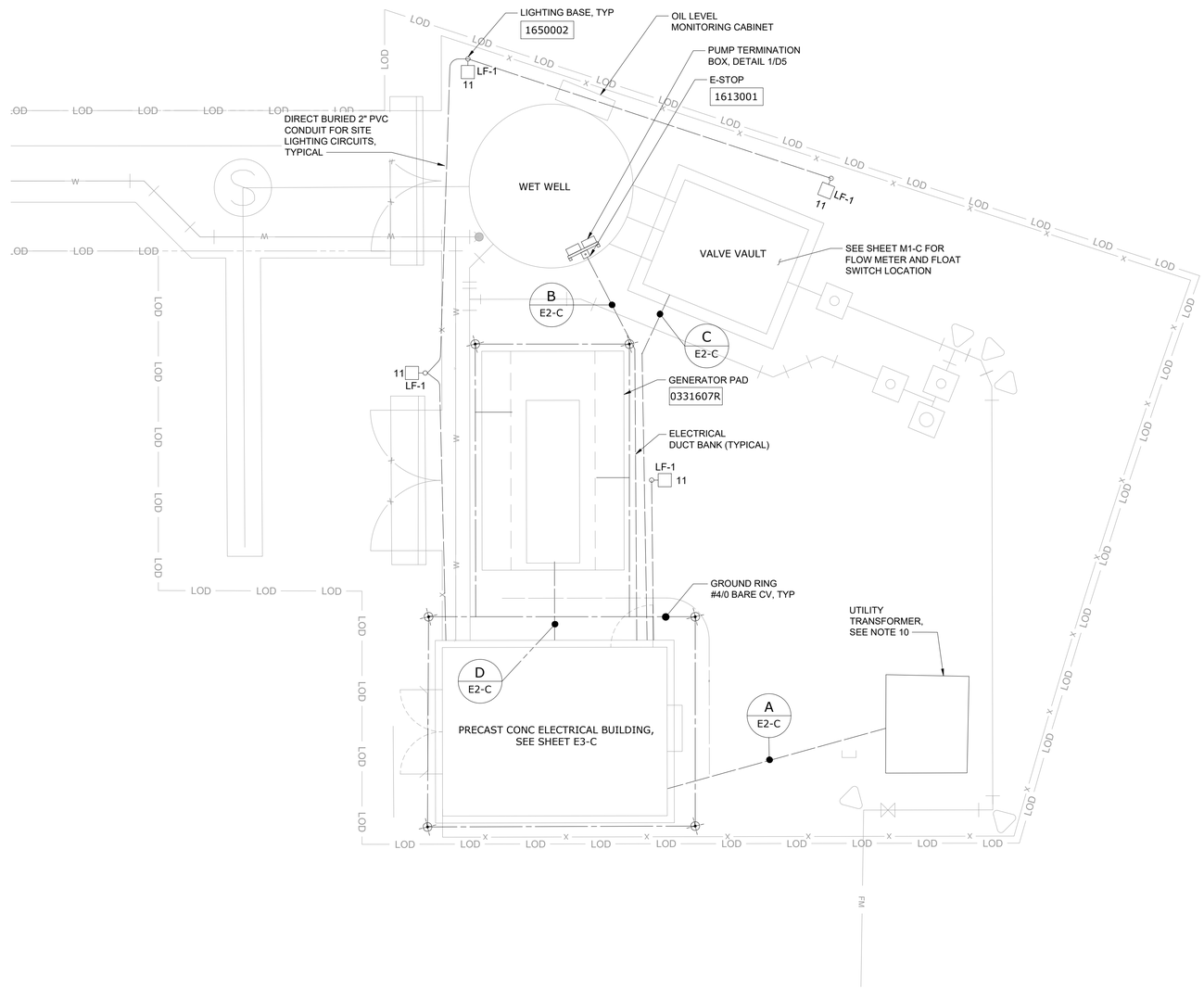

PROPOSED SITE PLAN

1"=5'

NOTES:

1. UNLESS SPECIFICALLY NOTED OTHERWISE, ALL UNDERGROUND CONCRETE ENCASED ELECTRICAL CONDUITS SHALL BE PER STANDARD DETAIL 1611801.
2. THE INSTALLATION OF ALL CONCRETE ENCASED ELECTRICAL CONDUITS SHALL COMPLY WITH ACI 318, SECTION 6.3. CONTRACTOR SHALL SUPPLY EXPANSION JOINT FITTINGS AS REQUIRED FOR THERMAL EXPANSION AND DEFLECTION.
3. BOND ALL NEW CONCRETE ENCASED GROUND CONDUCTORS TO EXISTING GROUND CONDUCTORS IN ALL MANHOLES, PULL BOXES, CABLE TRAYS, AND SIMILAR LOCATIONS WHERE APPLICABLE.
4. UNLESS OTHERWISE SPECIFIED OR NOTED, ALL WALL MOUNTED ELECTRICAL PANELS, ENCLOSURES, AND SIMILAR EQUIPMENT SHALL BE MOUNTED 6'-6" (MAX) FROM THE TOP OF THE PANEL TO FINISHED FLOOR OR GRADE.
5. UNLESS OTHERWISE NOTED, ALL LIGHTING SWITCHES, CONTROL SWITCHES, AND SIMILAR EQUIPMENT SHALL BE MOUNTED WITH THEIR CENTERLINE APPROXIMATELY 4'-0" ABOVE FINISHED FLOOR, SLAB, OR GRADE. THERMOSTATS SHALL BE MOUNTED 4'-4" ABOVE FINISHED FLOOR.
6. A SEPARATE EQUIPMENT GROUNDING CONDUCTOR SHALL BE PROVIDED FOR EACH CIRCUIT (SEPARATE CONDUCTOR IN THE CONDUIT). THE CONDUCTOR SHALL BE TERMINATED AT THE PROPER DEVICE, TERMINAL, OR LUG AT THE POWER SOURCE (MCC GROUND BUS, PANELBOARD GROUND BUS, ETC.). GROUND CONDUCTOR SIZE SHALL BE PER THE LATEST EDITION OF THE NEC.
7. UNLESS SPECIFICALLY NOTED OTHERWISE, EXISTING PAVEMENT SHALL BE SAW CUT AND REMOVED TO ALLOW FOR THE INSTALLATION OF NEW ELECTRICAL DUCTBANKS. AFTER INSTALLATION, REPLACE PAVEMENT WITH NEW TO MATCH ORIGINAL CONDITIONS.
8. CONDUIT HOMERUNS ARE NOT SHOWN ON DRAWINGS. CONTRACTOR SHALL REFER TO CONDUIT AND WIRE SCHEDULE, RISER DIAGRAMS, SINGLE LINE DIAGRAMS, AND OTHER DRAWINGS FOR CONDUIT AND WIRE REQUIREMENTS.
9. BOND MAIN DISCONNECT, DERIVED SYSTEM GROUND, WATER PIPE CONNECTION AND STRUCTURAL STEEL TO THE GROUNDING RING PER THE REQUIREMENTS OF NEC ARTICLE 250.
10. EXISTING UTILITY TRANSFORMER TO BE UPGRADED AS DESCRIBED IN SPECIFICATION SECTION 16000.

DUCT BANK SCHEDULE	
DB-A	P-2001
DB-B	P-2006, P2007, C-2006, I-2003 P-2008, C-2002, C-2007, C-2008
DB-C	I-2004, C-2010
DB-D	P-2003, C-2005 P-2013, P-2014, I-2007

SCALE: 1" = 5' 5 2.5 0 5'

REV	ISSUED FOR	DATE	BY
	PERMITTING SUBMITTAL	10/2019	AMF

PROJECT ENGINEER: A. FALLON
DESIGNED BY: D. WEBER
DRAWN BY: P. VANGORDEN
CHECKED BY: E. FRANCOIS
IF THIS BAR DOES NOT MEASURE 1" THEN DRAWING IS NOT TO FULL SCALE 0 1/2" 1"

CONSTRUCTION SET

COMMONWEALTH OF VIRGINIA
EVERSLEY A. FRANCOIS
Lic. No. 57149
02-04-2020
PROFESSIONAL ENGINEER

Hazen
HAZEN AND SAWYER
4035 RIDGE TOP ROAD, SUITE 400
FAIRFAX, VA 22030

CITY OF WINCHESTER
WINCHESTER, VIRGINIA

PENNSYLVANIA AVENUE AND CONWAY
WASTEWATER PUMP STATIONS REPLACEMENT

ELECTRICAL
CONWAY
PARTIAL SITE PLAN

DATE: FEBRUARY 2020
HAZEN NO.: 31294-007/014
CONTRACT NO.:
DRAWING NUMBER: E2-C

PLOT DATE: 2020/02/03 1:19:32 PM BY: AMARNELL
File: Q:\31294-RIC\31294-014\ENGINEERING\CIVIL\LECE\E-2-C Saved By MBROCATO Save Date: 2019/11/25 2:04 PM

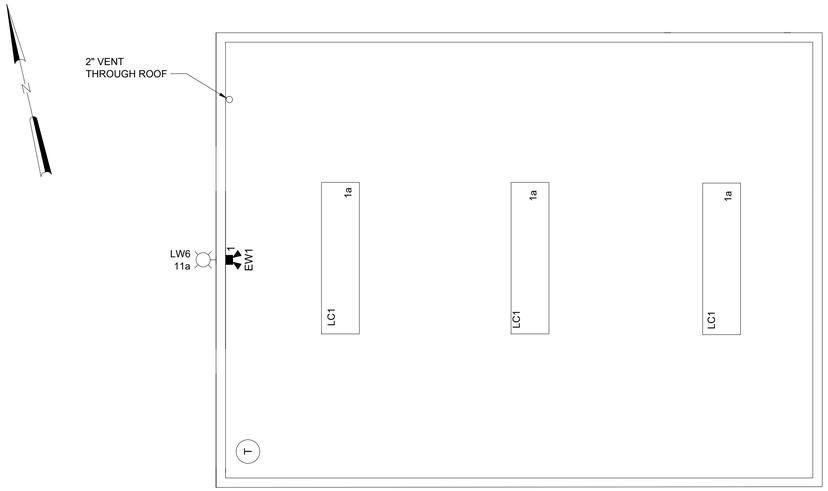

CEILING PLAN

SCALE: 1/2" = 1'-0"

NOTES:

1. SCADA RTU SHALL BE SUPPLIED AND PROGRAMMED BY OTHERS. INSTALLATION AND WIRING SHALL BE BY THE CONTRACTOR. CONTRACTOR SHALL COORDINATE WITH THE OWNER DURING CONSTRUCTION TO DETERMINE THE LOCATION OF THE REQUIRED I/O TERMINATIONS.
2. INSTANTANEOUS HOT WATER HEATER MOUNTED TO WALL UNDERNEATH UTILITY SINK AND ROUTE HOT WATER LINE TO SINK. PROVIDE RECEPTACLE AND CORD CONNECTION ADJACENT TO HEATER.
3. SEE SHEET E3-P FOR LIGHTING FIXTURE SCHEDULE.
4. LOCATE FLOOR DRAIN IN VICINITY OF THE BACKFLOW PREVENTER.

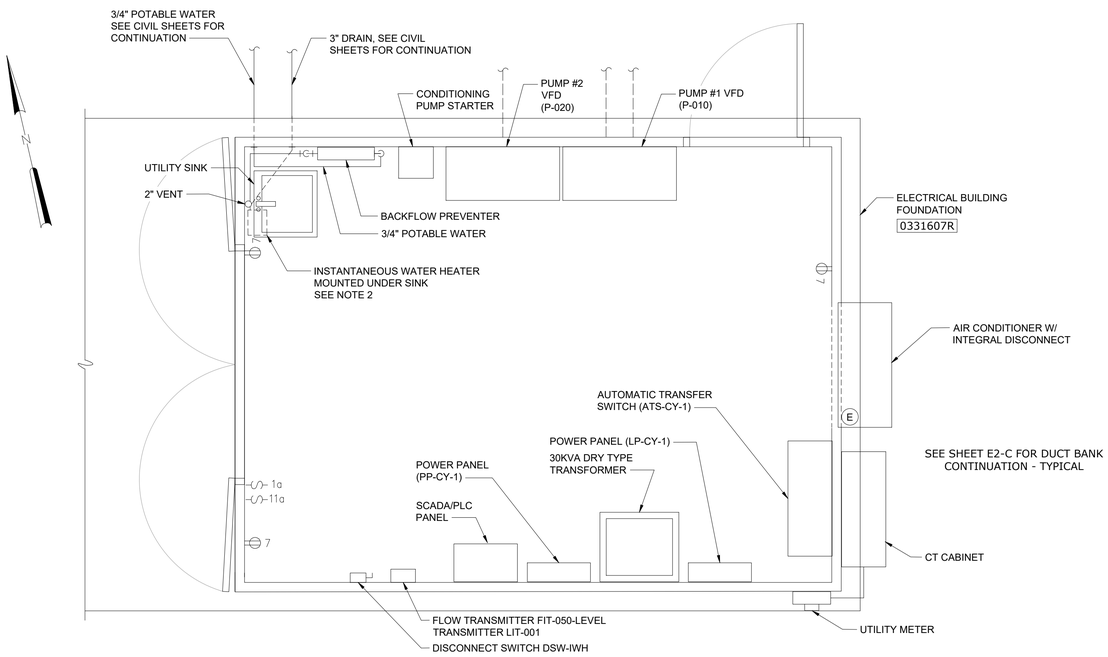

BOTTOM PLAN

SCALE: 1/2" = 1'-0"

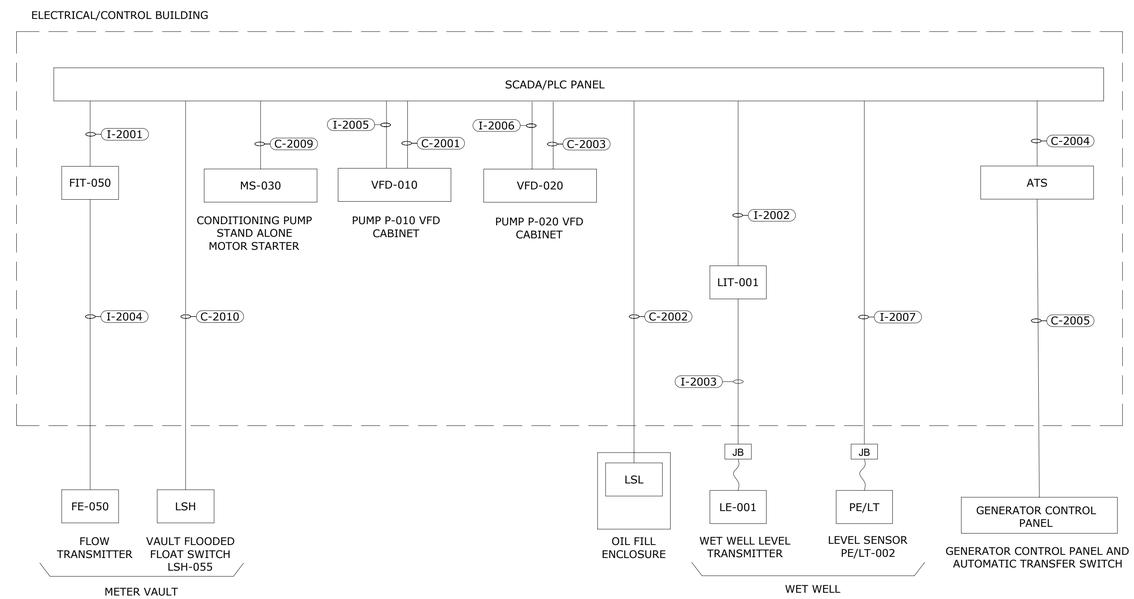

SCADA PANEL - CONTROL ONE-LINE DIAGRAM

NO SCALE

1/2"=1'-0" 12" 0 1 3'

REV	ISSUED FOR	DATE	BY
	PERMITTING SUBMITTAL	10/2019	AMF

PROJECT ENGINEER:	A. FALLON
DESIGNED BY:	D. WEBER
DRAWN BY:	P. VANGORDEN
CHECKED BY:	E. FRANCOIS

IF THIS BAR DOES NOT MEASURE 1" THEN DRAWING IS NOT TO FULL SCALE 0 1/2" 1"

CONSTRUCTION SET

COMMONWEALTH OF VIRGINIA
EVERSLEY A. FRANCOIS
Lic. No. 57149
02-04-2020
PROFESSIONAL ENGINEER

Hazen

HAZEN AND SAWYER
4035 RIDGE TOP ROAD, SUITE 400
FAIRFAX, VA 22030

CITY OF WINCHESTER
WINCHESTER, VIRGINIA

PENNSYLVANIA AVENUE AND CONWAY
WASTEWATER PUMP STATIONS REPLACEMENT

ELECTRICAL
CONWAY
ELECTRICAL BUILDING PLAN
AND SECTION

DATE:	FEBRUARY 2020
HAZEN NO.:	31294-007/014
CONTRACT NO.:	
DRAWING NUMBER:	E3-C

PLOT DATE: 2020/02/03 1:20:01 PM BY: AGARNELL
File: Q:\31294-RC\31294-014\ENGINEERING\CVA\ELEC\E-3-C Saved By MBROCATO Save Date: 2019/11/25 2:23 PM

NOTES:

1. TYPICAL CONNECTIONS AND CONTROLS FOR P-020. SEE ELECTRICAL DRAWINGS FOR MORE DETAIL.
2. LIT-001 AND FIT-050 ARE REMOTE MOUNTED IN THE ELECTRICAL ROOM.

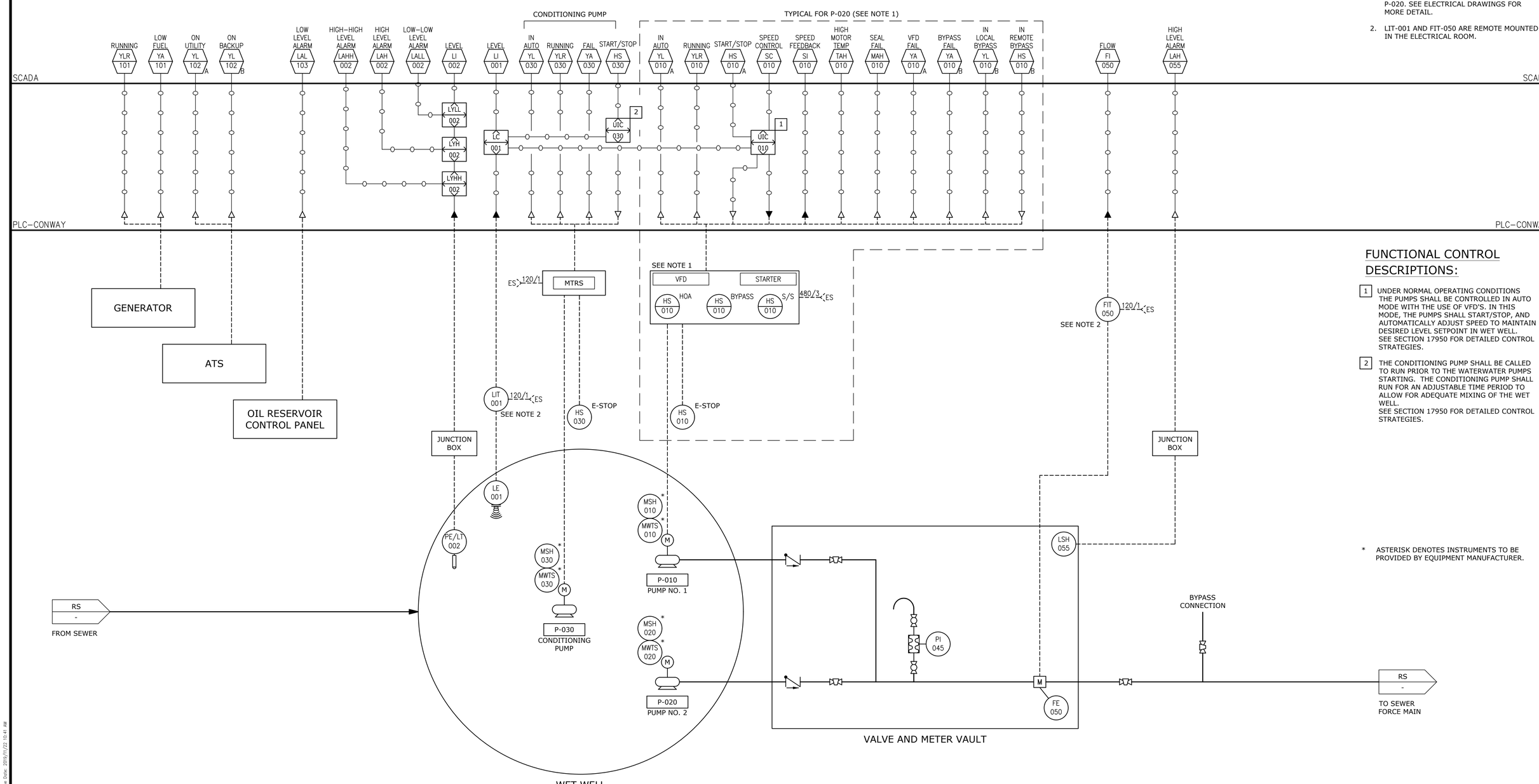

FUNCTIONAL CONTROL DESCRIPTIONS:

1. UNDER NORMAL OPERATING CONDITIONS THE PUMPS SHALL BE CONTROLLED IN AUTO MODE WITH THE USE OF VFD'S. IN THIS MODE, THE PUMPS SHALL START/STOP, AND AUTOMATICALLY ADJUST SPEED TO MAINTAIN DESIRED LEVEL SETPOINT IN WET WELL. SEE SECTION 17950 FOR DETAILED CONTROL STRATEGIES.
2. THE CONDITIONING PUMP SHALL BE CALLED TO RUN PRIOR TO THE WATERWATER PUMPS STARTING. THE CONDITIONING PUMP SHALL RUN FOR AN ADJUSTABLE TIME PERIOD TO ALLOW FOR ADEQUATE MIXING OF THE WET WELL. SEE SECTION 17950 FOR DETAILED CONTROL STRATEGIES.

* ASTERISK DENOTES INSTRUMENTS TO BE PROVIDED BY EQUIPMENT MANUFACTURER.

REV	ISSUED FOR	DATE	BY
	PERMITTING SUBMITTAL	10/2019	AMF

PROJECT ENGINEER: A. FALLON
DESIGNED BY: C. KOLESA
DRAWN BY: C. KOLESA
CHECKED BY: D. EDWARDS
IF THIS BAR DOES NOT MEASURE 1" THEN DRAWING IS NOT TO FULL SCALE 0 1/2" 1"

CONSTRUCTION SET

COMMONWEALTH OF VIRGINIA
DANIEL B. EDWARDS
Lic. No.24960
02-04-2020
PROFESSIONAL ENGINEER

Hazen
HAZEN AND SAWYER
4035 RIDGE TOP ROAD, SUITE 400
FAIRFAX, VA 22030

CITY OF WINCHESTER
WINCHESTER, VIRGINIA

PENNSYLVANIA AVENUE AND CONWAY WASTEWATER PUMP STATIONS REPLACEMENT

INSTRUMENTATION
CONWAY
PROCESS AND INSTRUMENTATION DIAGRAM

DATE: FEBRUARY 2020
HAZEN NO.: 31294-007/014
CONTRACT NO.:
DRAWING NUMBER: I1-C

PLOT DATE: 2020/02/03 2:40:19 PM FIT: KSUTTON
File: G:\31294-RCV\31294-007\DESIGN\DRAWINGS\INSTU-2-C Saved By: CKOLESA Save Date: 2019/11/22 10:41 AM

CITY OF WINCHESTER, VA
DEPARTMENT OF PUBLIC UTILITIES

* 2" FORD COPPERSETTER MODEL # VBH977-15BHC-11-77
* 1-1/2" FORD: SAME LAYING DISTANCE AS 2" WITH ONE PAIR OF 2" x 1-1/2" METER ADAPTERS, FORD PART # A67 (FURNISHED BY CONTRACTOR)
* SET METER WIDTH TO 17". USE ADAPTERS FOR 1-1/2" METERS AS NECESSARY.
* METER SUPPLIED BY THE DEPARTMENT OF PUBLIC UTILITIES
* FLANGED ANGLE METER VALVE SHALL HAVE O-RING TYPE FLANGE METER SUPPORT BRACKETS
* BACK FLOW DEVICE REQUIRED AS SET FORTH IN CITY CROSS CONNECTION CONTROL PROGRAM
* BACKFLOW DEVICE MAY NOT BE INSTALLED IN METER VAULT
* PRECAST VAULT AS MANUFACTURED BY WINCHESTER BUILDING SUPPLY OF WINCHESTER, VA OR APPROVED EQUAL
* CONNECT TO EX. SERVICE BEHIND SIDEWALK OR AT BUILDING

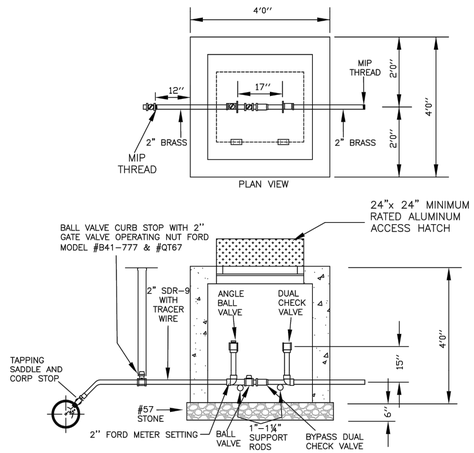

STANDARD DETAIL NO. WD- 4	1 1/2" & 2" METER INSTALLATION SCALE: NONE	DATE: 02/2018

CITY OF WINCHESTER, VA
DEPARTMENT OF PUBLIC UTILITIES

TYPICAL RESILIENT SEAT VALVE INSTALLATION:

VALVE BOX AND BOOT SHALL BE CAST IRON

VALVE BOX COVER SHALL BE MARKED "WATER"

VALVE TOP SHALL BE FLUSH WITH FINISHED GRADE

18" X 18" CONCRETE PAD SHALL BE PLACED AROUND VALVE BOXES LOCATED OUTSIDE OF PAVEMENT AREAS

VALVE BOX SHALL BE SCREW TYPE FOR ADJUSTMENT

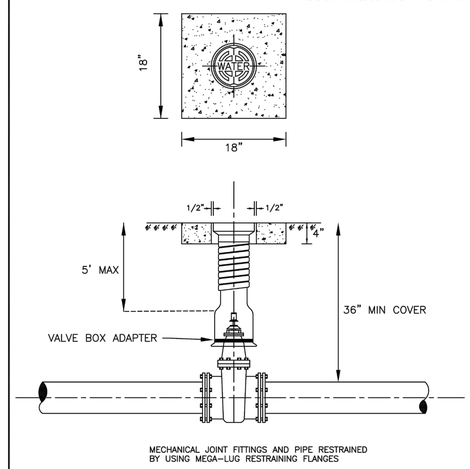

STANDARD DETAIL NO. WD- 8	TYPICAL VALVE & BOX INSTALLATION SCALE: NONE	DATE: 10/2017

CITY OF WINCHESTER, VA
DEPARTMENT OF PUBLIC UTILITIES

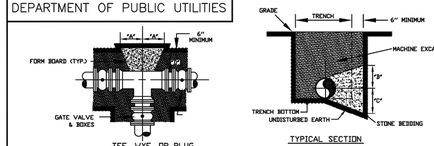

TEE, WYE, OR PLUG

IN LIEU OF WOOD FORMING THE FITTING MAY BE WRAPPED WITH POLYETHYLENE, AND THE CONCRETE POURED TO COMPLETELY SURROUNDS THE FITTINGS AND AGAINST UNDISTURBED SOIL. THE BEARING DIMENSIONS AGAINST UNDISTURBED SOIL SHALL REMAIN AS SHOWN.

TYPICAL SECTION

*DENOTES HAND EXCAVATION
"B" = 12" MIN. FOR 18" AND SMALLER PIPE
"B" = 18" MIN. FOR 12" THRU 20" PIPE
SEE CHART BELOW FOR A,B,C DIMENSIONS.

CONCRETE DIMENSIONS FOR HORIZONTAL THRUST BLOCKS

PIPE DIA.	PLUGS, WYES & TEES			11 1/4° AND 22 1/2° BENDS			45° AND 90° BENDS		
--	A	B	C	A	B	C	A	B	C
6"	1'-0"	0'-9"	1'-0"	0'-9"	0'-9"	0'-9"	1'-3"	0'-9"	1'-9"
8"	1'-3"	0'-9"	1'-3"	0'-9"	0'-9"	0'-9"	1'-6"	0'-9"	2'-3"
10"	1'-6"	0'-9"	1'-6"	1'-0"	0'-9"	1'-3"	1'-9"	0'-9"	2'-6"
12"	1'-9"	1'-0"	2'-6"	1'-3"	1'-0"	1'-6"	2'-0"	1'-0"	3'-0"
14"	2'-0"	1'-0"	3'-0"	1'-3"	1'-0"	1'-6"	2'-6"	1'-0"	4'-0"
16"	2'-3"	1'-0"	3'-6"	1'-6"	1'-0"	2'-0"	2'-9"	1'-0"	4'-6"
18"	2'-6"	1'-3"	3'-9"	1'-6"	1'-3"	2'-0"	3'-0"	1'-3"	4'-9"
20"	2'-9"	1'-6"	4'-0"	1'-9"	1'-6"	2'-0"	3'-3"	1'-6"	5'-0"

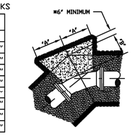

11 1/4 THRU 90° BENDS

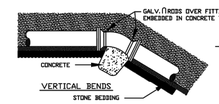

VERTICAL BENDS

THRUST BLOCKS FOR VERTICAL UP BENDS SHALL BE THE SAME AS FOR HORIZONTAL BENDS.

FITTING SIZE	ROD SIZE	NO. RODS	EMBEDMENT
18" & LESS	6	2	30"
14"-20"	8	2	36"

FITTING SIZE	VOLUME OF THRUST BLOCK IN CU.YD.			
	11-1/4°	22-1/2°	45°	90°
6"	-	-	-	1.3
8"	-	-	1.1	2.3
10"	-	-	1.8	3.7
12"	-	1.2	2.8	5.5
14"	0.5	1.7	3.9	7.6
16"	0.9	2.3	5.1	-
18"	1.4	3.2	6.3	-
20"	2.2	4.5	7.8	-

* WATER LINE SHALL ALSO BE SECURED W/JOINT RESTRAINTS PER CITY OF WINCHESTER STD. DETAIL WD-9

STANDARD DETAIL NO. WD-10	CONCRETE THRUST BLOCKING SCALE: NONE	DATE: 10/2017

CITY OF WINCHESTER, VA
DEPARTMENT OF PUBLIC UTILITIES

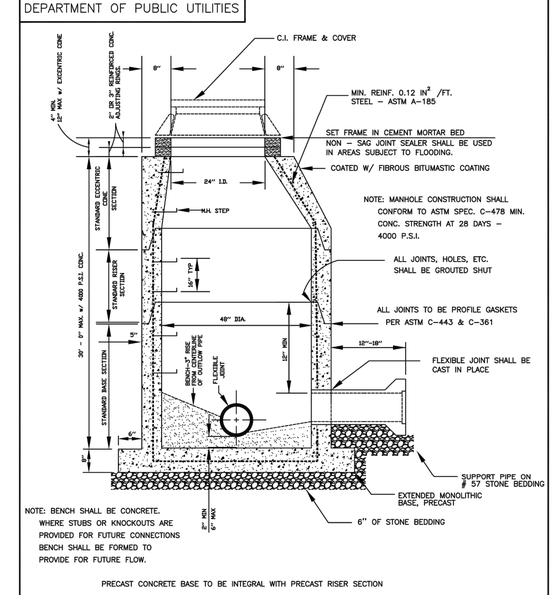

NOTE: BENCH SHALL BE CONCRETE. WHERE STUBS OR KNOCKOUTS ARE PROVIDED FOR FUTURE CONNECTIONS BENCH SHALL BE FORMED TO PROVIDE FOR FUTURE FLOW.

PRECAST CONCRETE BASE TO BE INTEGRAL WITH PRECAST RISER SECTION

STANDARD DETAIL NO. SS-1	STANDARD PRECAST CONCRETE MANHOLE SEWER 8" TO 24" SCALE: NONE	DATE: 10/2017

CITY OF WINCHESTER, VA
DEPARTMENT OF PUBLIC UTILITIES

MFG. BY NEENAH FOUNDRY
CAT. NO. R-1643
FRAME: COMPONENT NO. N1371-0061
LID: COMPONENT NO. N1371-0062
CAST GRAY IRON
ASTM A-48 CLASS 35B
FINISH – NO PAINT

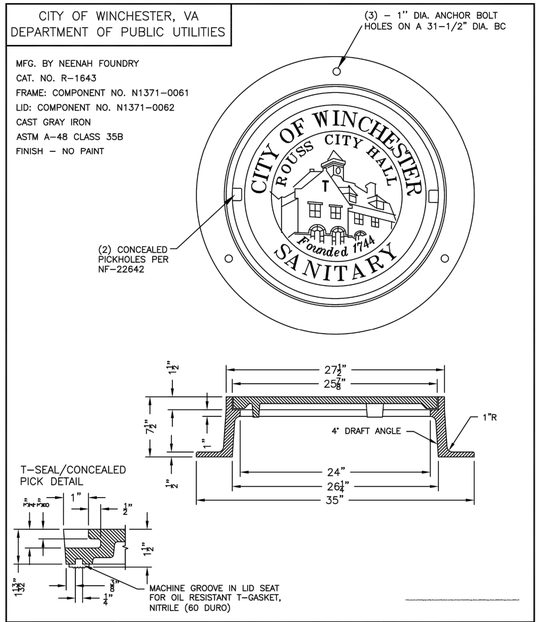

STANDARD DETAIL NO. SS-6	28" SANITARY MANHOLE LID AND FRAME SCALE: NONE	DATE: 10/2017

CITY OF WINCHESTER, VA
DEPARTMENT OF PUBLIC UTILITIES

* WHERE THE TRENCH BOTTOM IS ROCK, IT SHALL BE EXCAVATED TO A MINIMUM OF 8" BELOW THE BOTTOM OF THE PIPE AND BACKFILLED WITH BEDDING MATERIAL FREE OF ROOTS, DEBRIS & STONES
* WHERE SUBGRADE IS UNSTABLE, PIPE SHALL BE BEDDED ON A MINIMUM OF 8" BEDDING MATERIAL
* BACKFILL TO BE PLACED IN 12" LIFTS AND COMPACTED TO 90% OF MAXIMUM DRY DENSITY

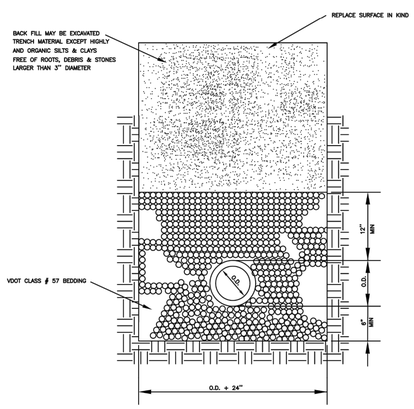

STANDARD DETAIL NO. WS – 1	STANDARD BEDDING DETAIL OUTSIDE TRAFFIC AREAS (PVC OR DIP) SCALE: NONE	DATE: 10/2017

CITY OF WINCHESTER, VA
DEPARTMENT OF PUBLIC UTILITIES

* WHERE THE TRENCH BOTTOM IS ROCK, IT SHALL BE EXCAVATED TO A MINIMUM OF 8" BELOW THE BOTTOM OF THE PIPE AND BACKFILLED WITH BEDDING MATERIAL FREE OF ROOTS, DEBRIS & STONES
* WHERE SUBGRADE IS UNSTABLE, PIPE SHALL BE BEDDED ON A MINIMUM OF 8" BEDDING MATERIAL

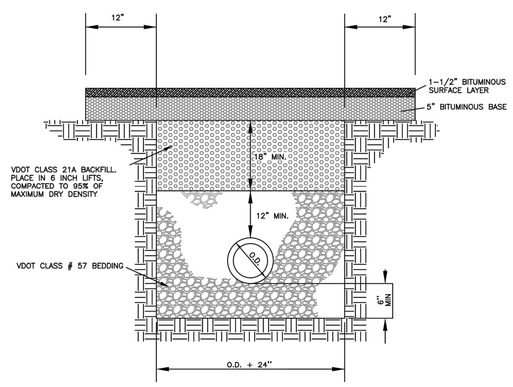

STANDARD DETAIL NO. WS – 2	STANDARD BEDDING DETAIL WITHIN TRAFFIC AREAS (PVC OR DIP) SCALE: NONE	DATE: 10/2017

REV	ISSUED FOR	DATE	BY
	PERMITTING SUBMITTAL	10/2019	AMF

PROJECT ENGINEER:	A. FALLON
DESIGNED BY:	N. McDERMOTT
DRAWN BY:	P. VANGORDEN
CHECKED BY:	J. PETERY

IF THIS BAR DOES NOT MEASURE 1" THEN DRAWING IS NOT TO FULL SCALE 0 1/2" 1"

CONSTRUCTION SET

COMMONWEALTH OF VIRGINIA
AGATA M. FALLON
Lic. No.36934
02-04-2020
PROFESSIONAL ENGINEER

Hazen

HAZEN AND SAWYER
4035 RIDGE TOP ROAD, SUITE 400
FAIRFAX, VA 22030

CITY OF WINCHESTER
WINCHESTER, VIRGINIA

PENNSYLVANIA AVENUE AND CONWAY
WASTEWATER PUMP STATIONS REPLACEMENT

STANDARD DETAILS

DATE: FEBRUARY 2020
HAZEN NO.: 31294-007/014
CONTRACT NO.:
DRAWING NUMBER: D1

PLOT DATE: 2020/02/03 1:20:31 PM BY: ADARNELL Saved By ADARNELL Save Date: 2019/11/20 9:36 AM
File: Q:\31294-RC\31294-014\ENGINEERING\CIVIL\DETAILS\D-1

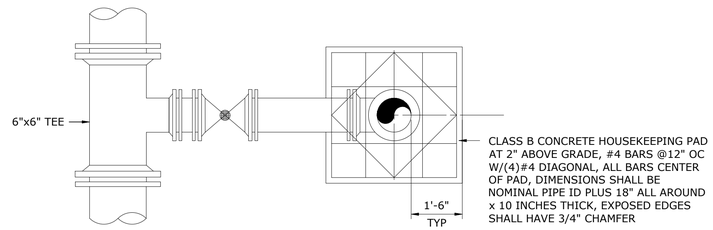

PLAN

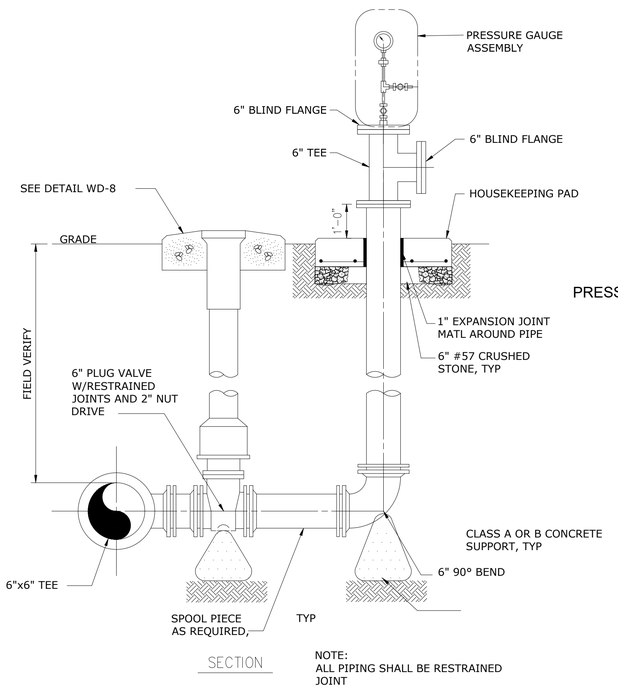

SECTION

NOTE:
ALL PIPING SHALL BE RESTRAINED JOINT

BYPASS PUMP CONNECTION DETAIL

DETAIL 1
NTS –

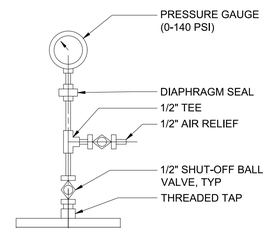

PRESSURE GAUGE ASSEMBLY

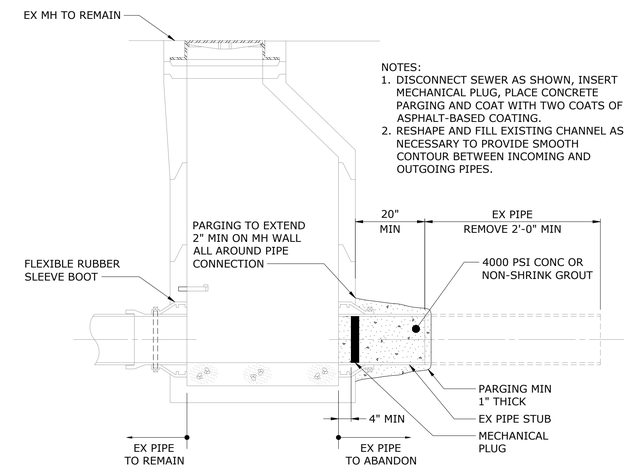

ABANDONMENT OF PIPE AT MANHOLE

DETAIL 3
NTS –

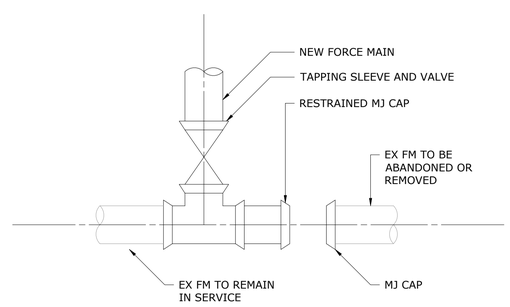

FORCE MAIN CONNECTION DETIAL

DETAIL 2
NTS –

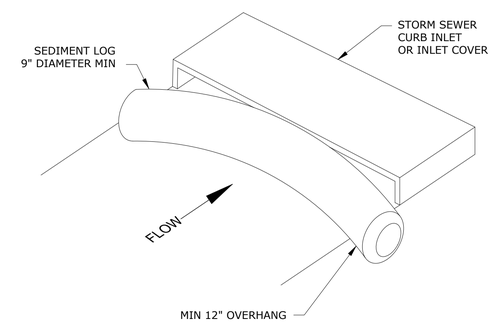

NOTES:

1. SEDIMENT LOG SHALL CONSIST OF RECYCLED SYNTHETIC FIBERS.
2. SEDIMENT LOG SHALL EXTEND A MINIMUM OF 12" BEYOND INLET OPENING.

MAINTENANCE REQUIREMENTS:

3. INSPECT SEDIMENT LOG ON A WEEKLY BASIS AND AFTER EACH RAINFALL EVENT PRODUCING ½ INCH OR MORE OF RAIN. ANY DEBRIS OR SEDIMENT VISIBLE SHALL BE REMOVED IMMEDIATELY.
4. DAMAGE TO THE SEDIMENT LOG SHALL BE REPAIRED IMMEDIATELY.
5. REMOVE SEDIMENT WHEN ACCUMULATION REACHES ½ THE DIAMETER OF THE LOG. SEDIMENT SHALL BE REMOVED OFF-SITE BY THE CONTRACTOR IN ACCORDANCE WITH ALL STATE AND LOCAL REGULATIONS.

SEDIMENT LOG INLET PROTECTION

DETAIL 4
NTS –

REV	ISSUED FOR	DATE	BY
	PERMITTING SUBMITTAL	10/2019	AMF

PROJECT ENGINEER: A. FALLON
DESIGNED BY: N. McDERMOTT
DRAWN BY: P. VANGORDEN
CHECKED BY: J. PETERY
IF THIS BAR DOES NOT MEASURE 1" THEN DRAWING IS NOT TO FULL SCALE 0 1/2" 1"

CONSTRUCTION SET

COMMONWEALTH OF VIRGINIA
AGATA M. FALLON
Lic. No.36934
02-04-2020
PROFESSIONAL ENGINEER

Hazen
HAZEN AND SAWYER
4035 RIDGE TOP ROAD, SUITE 400
FAIRFAX, VA 22030

CITY OF WINCHESTER
WINCHESTER, VIRGINIA

PENNSYLVANIA AVENUE AND CONWAY
WASTEWATER PUMP STATIONS REPLACEMENT

STANDARD DETAILS

DATE: FEBRUARY 2020
HAZEN NO.: 31294-007/014
CONTRACT NO.:
DRAWING NUMBER: D2

PLOT DATE: 2020/02/03 1:20:54 PM BY: ADARNELL
File: G:\31294-RIC\31294-014\ENGINEERING\CIVIL\DETAILS\D-2 Saved By: JBARNAK Save Date: 2019/10/25 2:34 PM

STONE CONSTRUCTION ENTRANCE (CE)

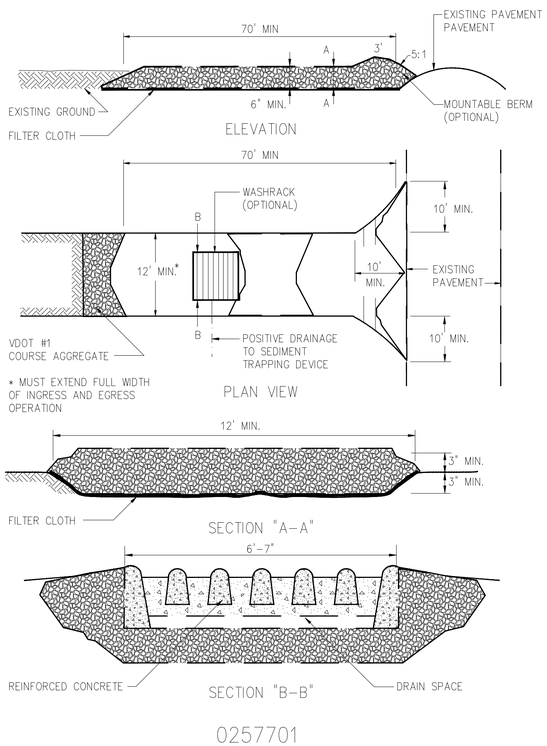

0257701

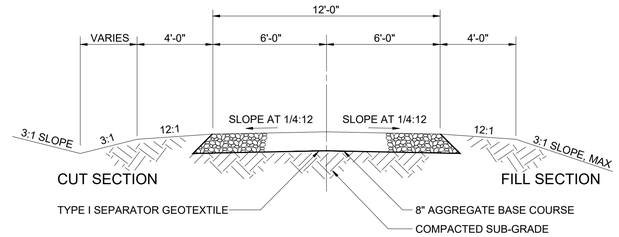

GRAVEL DRIVE @ PUMP STATION

0251100

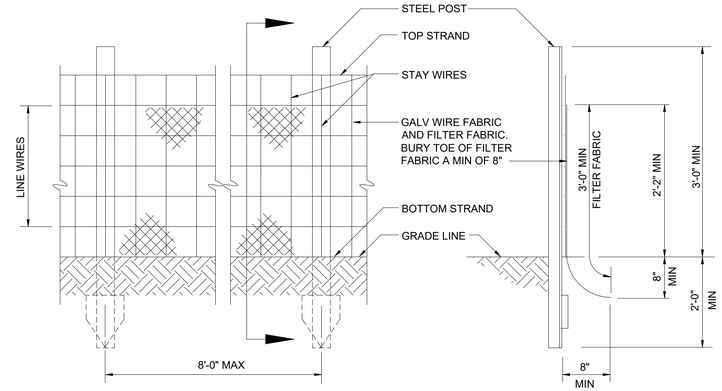

ELEVATION
SILT FENCE

SECTION
SILT FENCE

NOTE:

1. EXTRA STRENGTH FILTER FABRIC (AS APPROVED BY ENGINEER) WITH 6'-0" POST SPACING DOES NOT REQUIRE MESH SUPPORT FENCE.
2. FILTER FABRIC SHALL BE WIRED DIRECTLY TO POST.

0227000

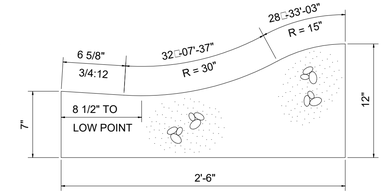

NOTES:

1. SINGLE FAMILY OR DUPLEX DEVELOPMENT.
2. STREETS ARE SHORT LOOP STREET OR CUL-DE-SACS SERVING A MAXIMUM OF THIRTY DWELLING UNITS.
3. TRANSITION TO A STANDARD SECTION 5 FEET ON EITHER SIDE OF A CATCH BASIN OR FIRE HYDRANT.
4. STANDARD CURB AND GUTTER WILL BE REQUIRED FROM PC TO PT OF ALL CORNERS.
5. THE MAXIMUM SPACING BETWEEN CATCH BASINS IS 500 FEET OR WHERE THE MAXIMUM GUTTER FLOW EQUALS 10 CUBIC FEET PER SECOND. (CALCULATIONS ARE REQUIRED WITH THE PLAN AND PROFILE REVIEW.)
6. METER BOXES, VALVE BOXES, MANHOLES, ETC. MUST BE 6.5 FEET FROM BACK OF CURB OR BE ENCIRCLED WITH A 6 INCH THICK CONCRETE SLAB, 18 INCHES ON ALL SIDES OF THE FACILITY.
7. DRIVEWAY SLABS MUST UTILIZE STANDARD CONCRETE FLARES AT ENTRANCES.

STANDARD 30" ROLLED CURB SECTION

0252802

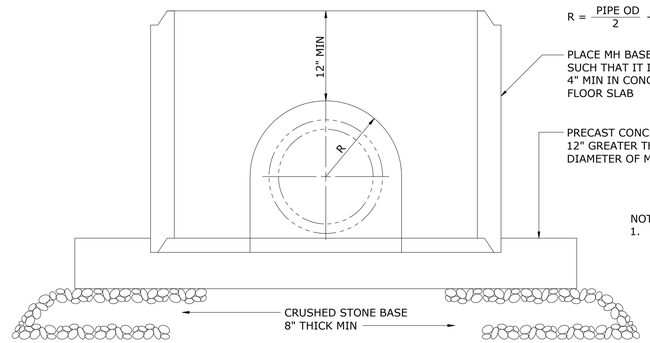

$R = \frac{\text{PIPE OD}}{2} + 6\text{" MIN}$

PLACE MH BASE SECTION SUCH THAT IT IS EMBEDDED 4" MIN IN CONCRETE FLOOR SLAB

PRECAST CONCRETE, SIDE LENGTH 12" GREATER THAN OUTSIDE DIAMETER OF MANHOLE BASE

NOTES:

1. FILL ANNULAR SPACE BETWEEN OUTSIDE OF PIPE AND MH WITH CONCRETE OR MASONRY TO INSURE WATERTIGHTNESS.

DOGHOUSE PRECAST MANHOLES

0260102R

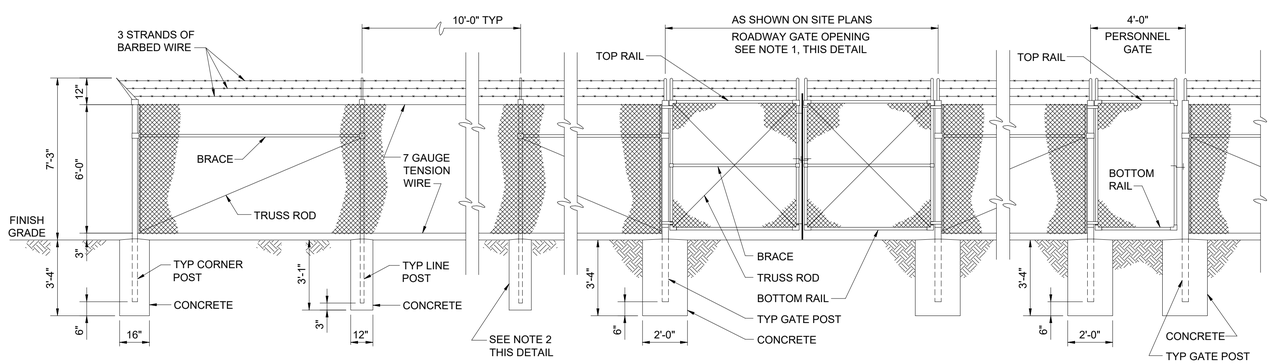

CORNER/LINE

CHAIN LINK FENCE

ROADWAY GATE

PERSONNEL GATE

0244400

NOTES:

1. PROVIDE LATCHING DEVICES TO HOLD GATES IN OPEN
2. POSITION. IF ROCK IS ENCOUNTERED WHEN SETTING POSTS, DRILL HOLES 4 INCHES LARGER IN DIAMETER THAN POSTS AND BACKFILL TO GRADE WITH CLASS "B" CONCRETE.

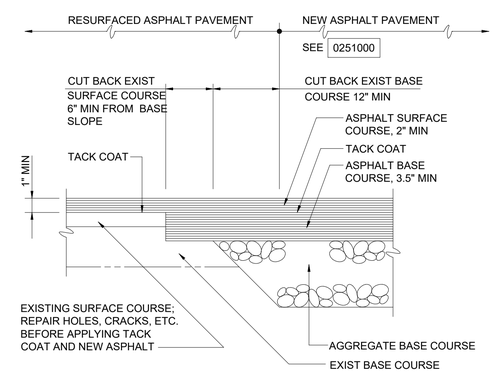

TYPICAL PAVEMENT JUNCTION WITH RESURFACING OF EXISTING PAVEMENT

0251300

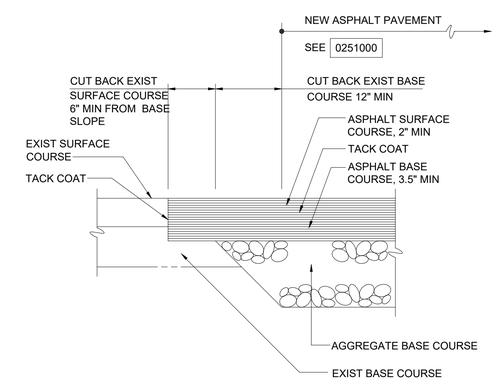

TYPICAL PAVEMENT JUNCTION

0251301

REV	ISSUED FOR	DATE	BY
	PERMITTING SUBMITTAL	10/2019	AMF

PROJECT ENGINEER:	A. FALLON
DESIGNED BY:	N. McDERMOTT
DRAWN BY:	P. VANGORDEN
CHECKED BY:	J. PETERY
IF THIS BAR DOES NOT MEASURE 1" THEN DRAWING IS NOT TO FULL SCALE	0 1/2" 1"

CONSTRUCTION SET

COMMONWEALTH OF VIRGINIA
AGATA M. FALLON
Lic. No.36934
02-04-2020
PROFESSIONAL ENGINEER

Hazen

HAZEN AND SAWYER
4035 RIDGE TOP ROAD, SUITE 400
FAIRFAX, VA 22030

CITY OF WINCHESTER
WINCHESTER, VIRGINIA

PENNSYLVANIA AVENUE AND CONWAY
WASTEWATER PUMP STATIONS REPLACEMENT

STANDARD DETAILS

DATE: FEBRUARY 2020
HAZEN NO.: 31294-007/014
CONTRACT NO.:
DRAWING NUMBER: D3

PLOT DATE: 2020/02/03 1:21:19 PM BY: ABARNELL
File: Q:\31294-RIC\31294-014\ENGINEERING\CIVIL\DETAILS\D-3 Saved By: JBARNAK Save Date: 2019/10/25 2:33 PM

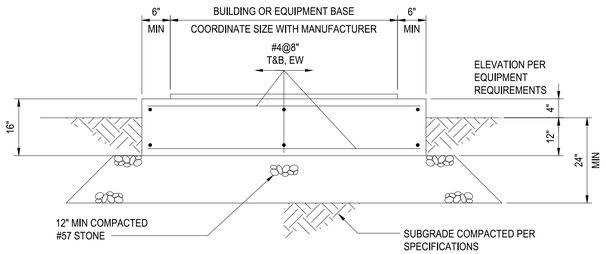

EXTERIOR EQUIPMENT FOUNDATION

0331607R

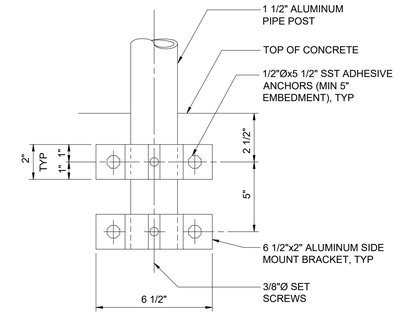

SIDE MOUNT
TO CONCRETE

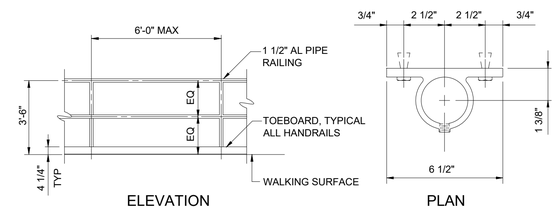

ELEVATION PLAN

ALUMINUM HANDRAILS

0552000R

SCHEDULE A				
BASE ELBOW (TEE) (DIM IN INCHES)				
PIPE SIZE	A	B	C	D DIA x LG
3	1 1/2	5	4 7/8	1/2 x 5
4	2	6	5 1/2	5/8 x 5
5-6	2 1/2	7	VARIES	5/8 x 5
8-10	4	9	VARIES	5/8 x 5
12-16	6	11	VARIES	3/4 x 6
18-24	8	13 1/2	VARIES	3/4 x 6
30	10	16	23	7/8 x 7
36	12	19	26	7/8 x 7

SCHEDULE B				
ADJUSTABLE SADDLE (DIM IN INCHES)				
PIPE SIZE	A	B	C	D DIA x LG
3	2 1/2	7	1 1/2	5/8 x 5
4-12	3	7 1/2	2 1/2	5/8 x 5
14-16	4	9	3	5/8 x 5
18-20	6	11	3 1/2	3/4 x 6
24-48	6	11	4	3/4 x 6

1509401

REV	ISSUED FOR	DATE	BY
	PERMITTING SUBMITTAL	10/2019	AMF

PROJECT ENGINEER: A. FALLON
DESIGNED BY: N. McDERMOTT
DRAWN BY: P. VANGORDEN
CHECKED BY: J. PETERY
IF THIS BAR DOES NOT MEASURE 1" THEN DRAWING IS NOT TO FULL SCALE 0 1/2" 1"

CONSTRUCTION SET

COMMONWEALTH OF VIRGINIA
AGATA M. FALLON
Lic. No.36934
02-04-2020
PROFESSIONAL ENGINEER

Hazen

HAZEN AND SAWYER
4035 RIDGE TOP ROAD, SUITE 400
FAIRFAX, VA 22030

CITY OF WINCHESTER
WINCHESTER, VIRGINIA

PENNSYLVANIA AVENUE AND CONWAY
WASTEWATER PUMP STATIONS REPLACEMENT

STANDARD DETAILS

DATE: FEBRUARY 2020
HAZEN NO.: 31294-007/014
CONTRACT NO.:
DRAWING NUMBER: D4

PLOT DATE: 2020/02/03 1:21:42 PM BY: ADARNELL
File: G:\31294-RC\31294-014\ENGINEERING\CIVIL\DETAILS\D-4 Saved By PVANGORDEN Save Date: 2019/10/23 8:14 AM

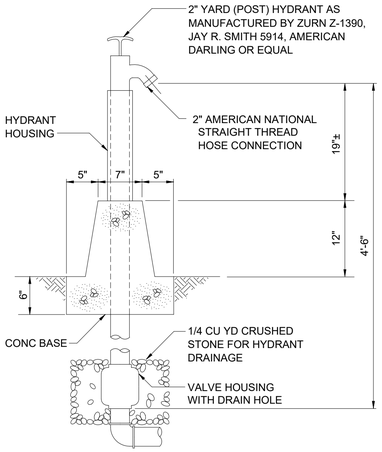

NON-FREEZE
YARD HYDRANT
1511502

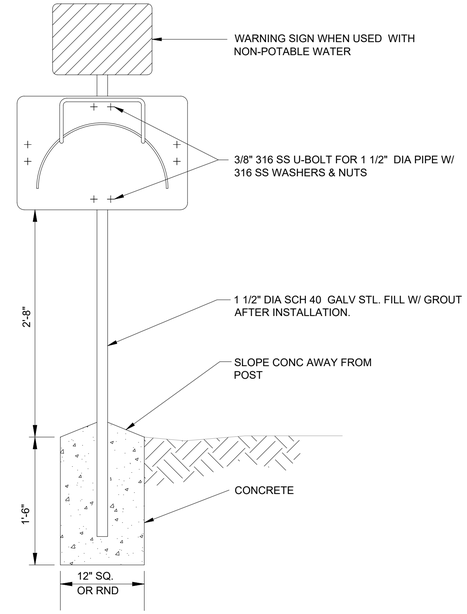

YARD MOUNT DETAIL

NOTE:
PROVIDE ONE HOSE RACK AND ONE HOSE STATION AT EACH YARD HYDRANT.

HOSE RACK MOUNTING DETAILS
1511511

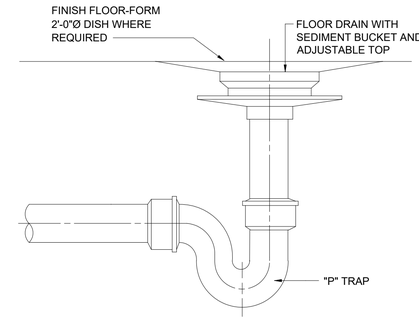

FLOOR DRAIN
1542102

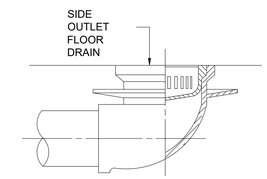

SIDE OUTLET FLOOR DRAIN
1542103

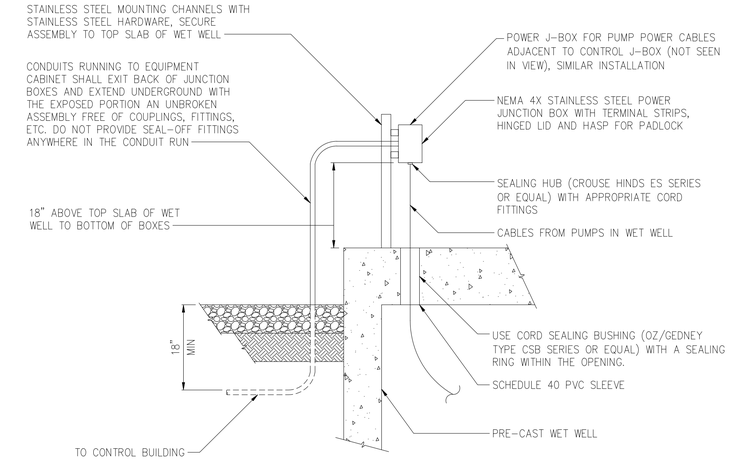

TYPICAL PUMP TERMINAL BOX

DETAIL	1
NTS	-

THREADED ROD SCHEDULE

PIPE SIZE	REQUIRED TIE QUANTITY FOR DESIGN PRESSURE					THREADED ROD SIZE, INCHES	TAB THICKNESS, INCHES
	50 PSI	100 PSI	150 PSI	200 PSI	250 PSI		
3	2	2	2	2	2	5/8	1/2
4	2	2	2	2	2	5/8	1/2
6	2	2	2	2	2	5/8	3/4
8	2	2	2	3	3	5/8	3/4
10	2	2	2	3	3	3/4	1
12	2	2	2	3	3	7/8	1
14	2	2	2	3	3	1	1
16	2	2	2	3	4	1	1
18	2	2	3	4	5	1	1
20	2	3	4	5	6	1	1
24	2	3	5	6	9	1	1
30	2	3	5	6	9	1 1/4	1 1/4
36	3	5	7	9	12	1 1/4	1 1/4
42	3	6	9	12	16	1 1/4	1 1/4
48	3	6	8	11	15	1 1/2	1 3/4
54	4	7	10	14	18	1 1/2	1 3/4
60	5	9	13	17	23	1 1/2	1 3/4
64/66	4	8	11	15	20	1 3/4	2
72	5	9	13	18	24	1 3/4	2

1. THREADED RODS FOR ALL PIPE DIAMETERS SHALL BE ASTM A193 (GRADE B7).
2. ALL TABS SHALL BE ASTM A36 STEEL.
3. ASTM A193 (GRADE B7) RODS SHALL BE LABELED AND BUNDLED SEPARATELY.
4. THIS SCHEDULE SHALL APPLY FOR HARNESSED FLANGED ADAPTERS, HARNESSED FLEXIBLE COUPLINGS AND ALL MECHANICAL JOINT COUPLINGS, SLEEVES ETC. THAT ARE REQUIRED TO BE HARNESSED.
5. RODS THREADED AT ENDS (INCLUDING NUTS) SHALL BE EQUALLY SPACED AROUND PIPE BETWEEN ALL MECHANICAL JOINT FITTINGS (TEE, VALVES, BEND, PLUG, ETC.) OR AS OTHERWISE SHOWN ON THE CONTRACT DRAWINGS. THREADED RODS SHALL BE AS SHOWN IN THE THREADED ROD SCHEDULE. SEE NOTE 6.
6. RODS, NUTS, ETC., IN CONTACT WITH SOIL SHALL BE PAINTED WITH TWO COATS COAL TAR (MIN 26 DRY MIL THICKNESS) TNEMEC 46-465 HI-BUILD OR EQUAL.

1516403

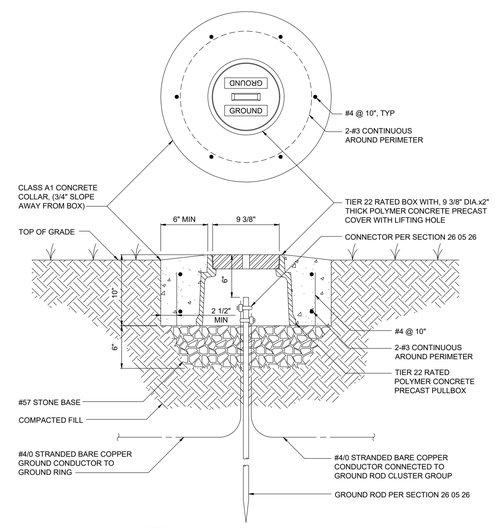

NOTES:

1. PRECAST PULLBOX AND COVER SHALL BE OLDCASTLE PART NUMBER 09101187, OR APPROVED EQUAL.

GROUND ROD TEST WELL INSTALLATION DETAIL
E-26-0501

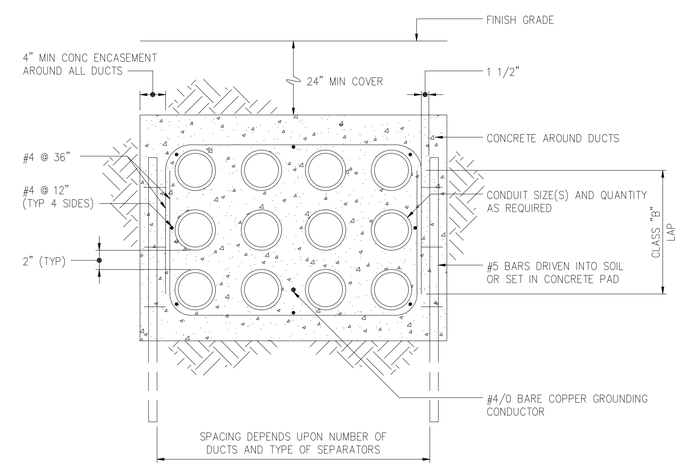

TYPICAL DUCT BANK DETAIL
1611801

REV	ISSUED FOR	DATE	BY
	PERMITTING SUBMITTAL	10/2019	AMF

PROJECT ENGINEER:	A. FALLON
DESIGNED BY:	C. OHRNBERGER
DRAWN BY:	P. VANGORDEN
CHECKED BY:	J. PETERY

IF THIS BAR DOES NOT MEASURE 1" THEN DRAWING IS NOT TO FULL SCALE 0 1/2" 1"

CONSTRUCTION SET

COMMONWEALTH OF VIRGINIA
AGATA M. FALLON
Lic. No.36934
02-04-2020
PROFESSIONAL ENGINEER

Hazen
HAZEN AND SAWYER
4035 RIDGE TOP ROAD, SUITE 400
FAIRFAX, VA 22030

CITY OF WINCHESTER
WINCHESTER, VIRGINIA

PENNSYLVANIA AVENUE AND CONWAY
WASTEWATER PUMP STATIONS REPLACEMENT

STANDARD DETAILS

DATE: FEBRUARY 2020
HAZEN NO.: 31294-007/014
CONTRACT NO.:
DRAWING NUMBER: D5

PLOT DATE: 2020/02/03 1:22:04 PM BY: ADARNELL
File: G:\31294-RC\31294-014\ENGINEERING\CIVIL\DETAILS\D-5 Saved By PVANGORDEN Save Date: 2019/10/23 8:15 AM

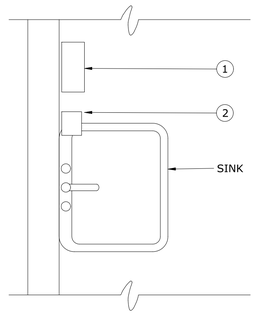

SINK ACCESSORY SCHEDULE		
No.	ITEM	MOUNTING HEIGHT
1	PAPER TOWEL DISPENSER AND DISPOSAL	48" TO CENTER
2	WALL MOUNTED SOAP DISPENSER	6" ABOVE SINK

ELECTRICAL BUILDING
SINK PLAN

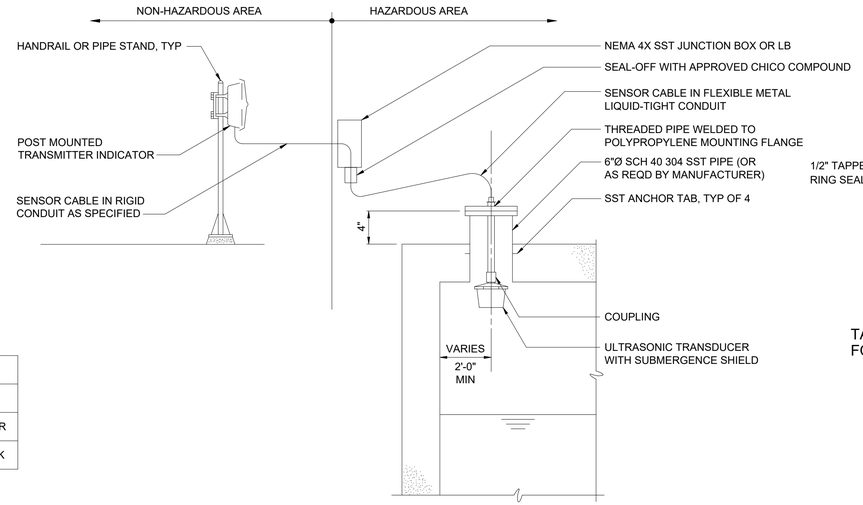

ULTRASONIC LEVEL TRANSDUCER
WET WELL MOUNTING DETAIL

1774006R

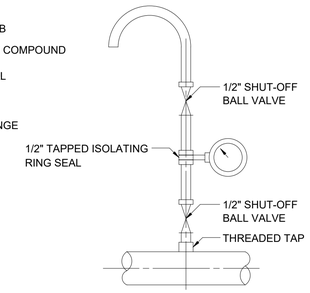

TAPPED ISOLATING RING DETAIL
FOR SEWAGE PUMP DISCHARGE

1769802R

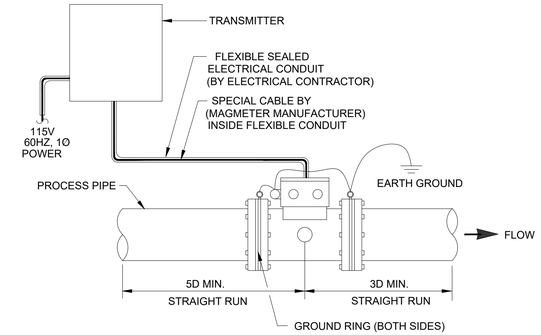

MAGNETIC FLOW METER WITH TRANSMITTER

1770101R

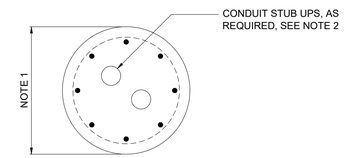

PLAN

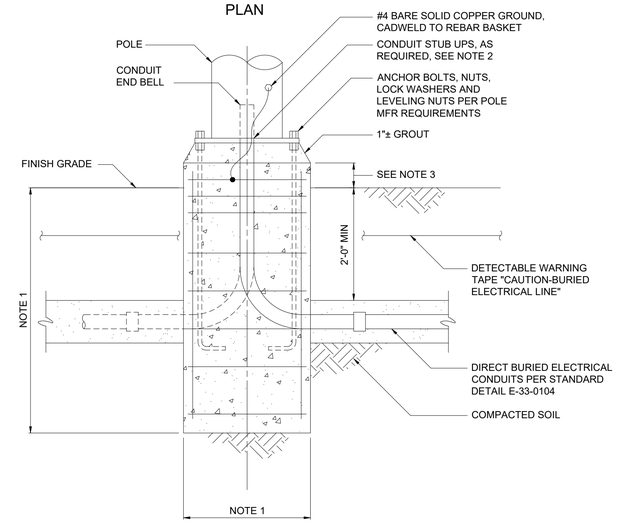

ELEVATION

NOTES:

1. DIAMETER, DEPTH AND REINFORCEMENT SHALL BE DETERMINED BY POLE MANUFACTURER IN ACCORDANCE WITH SECTION 26 50 00. LOADING SHALL BE IN ACCORDANCE WITH SECTION 26 50 00.
2. CONTRACTOR SHALL CAREFULLY COORDINATE LOCATION AND QUANTITY OF CONDUITS IN THE BASE SO THAT WHEN POLE IS INSTALLED, IT WILL FIT OVER THE CONDUITS.
3. PROJECTED HEIGHT ABOVE GRADE SHALL BE AS DESCRIBED IN THE POLE SCHEDULE IN 26 50 00.

POLE-MOUNTED LIGHTING FIXTURE BASE

1650002

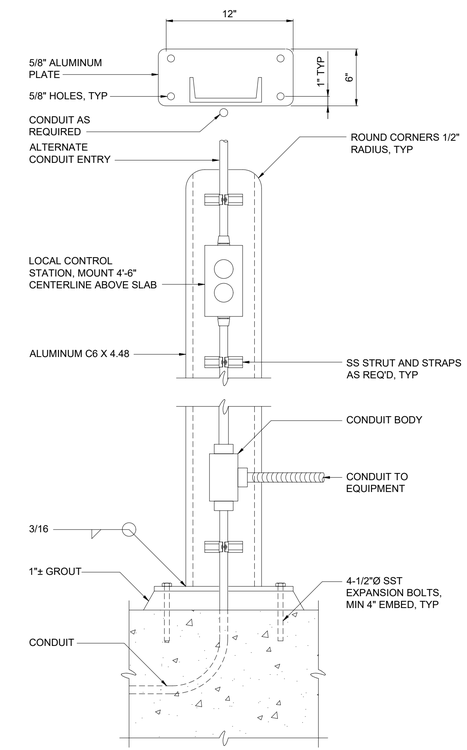

ELEVATION

NOTES:

1. COAT ALUMINUM SURFACES IN CONTACT WITH CONCRETE PER SPECIFICATIONS.
2. CONSTRUCT 1'-2" DIAMETER X 2'-6" DEEP FOUNDATION WHERE MOUNTING SURFACE IS NOT AVAILABLE.
3. USE SST WASHERS, NUTS AND BOLTS FOR MOUNTING DEVICES.

TYPICAL LOCAL CONTROL STATION

1613001

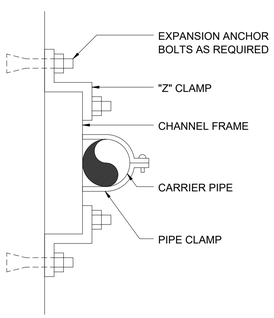

WALL SUPPORT AND SUPPORT RACK SHALL BE ASSEMBLED W/ CHANNEL FRAMES AND ACCESSORIES AS MANUFACTURED BY UNISTRUT CORP OR EQUAL

STILLING WELL WALL SUPPORT

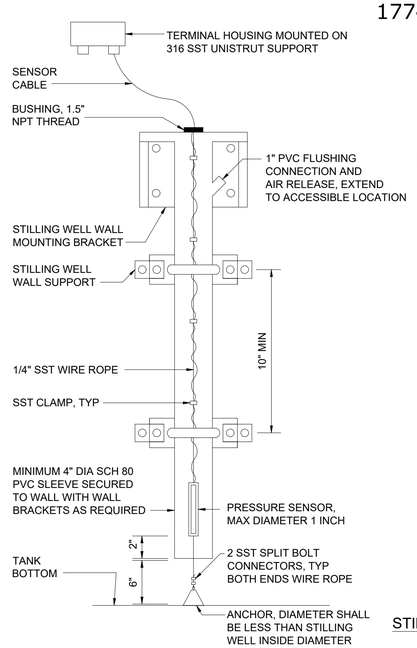

SUBMERSIBLE LEVEL (PRESSURE) TRANSMITTER
OPEN TANK WALL MOUNTING DETAIL

1774901

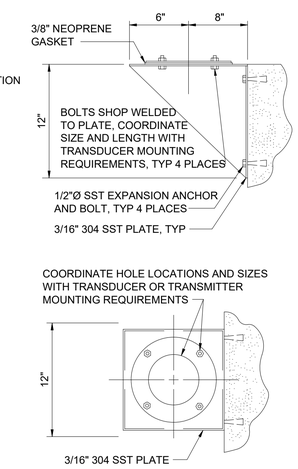

STILLING WELL MOUNTING BRACKET

REV	ISSUED FOR	DATE	BY
	PERMITTING SUBMITTAL	10/2019	AMF

PROJECT ENGINEER:	A. FALLON
DESIGNED BY:	N. McDERMOTT
DRAWN BY:	P. VANGORDEN
CHECKED BY:	J. PETERY
IF THIS BAR DOES NOT MEASURE 1" THEN DRAWING IS NOT TO FULL SCALE	0 1/2" 1"

CONSTRUCTION SET

COMMONWEALTH OF VIRGINIA
DANIEL B. EDWARDS
Lic. No.24960
02-04-2020
PROFESSIONAL ENGINEER

Hazen

HAZEN AND SAWYER
4035 RIDGE TOP ROAD, SUITE 400
FAIRFAX, VA 22030

CITY OF WINCHESTER
WINCHESTER, VIRGINIA

PENNSYLVANIA AVENUE AND CONWAY
WASTEWATER PUMP STATIONS REPLACEMENT

INSTRUMENTATION
PENNSLYVANIA AVENUE
STANDARD DETAILS

DATE: FEBRUARY 2020
HAZEN NO.: 31294-007/014
CONTRACT NO.:
DRAWING NUMBER: D6

PLOT DATE: 2020/02/03 1:22:28 PM BY: AZARNELL Saved By: AZARNELL Save Date: 2019/11/22 10:00 AM
File: Q:\31294-RIC\31294-014\ENGINEERING\CAD\DETAILS\D-6