PROJECT MANAGER Percy Eisenach, P.E. - City of Winchester (540) 667-2085
SURVEYED BY, DATE Sidney Thomas, L.S. - Rinker Design Associates (703) 368-7373, October 2014
DESIGN BY John A. Giovetti, P.E. - Rinker Design Associates (703) 334-0060
SUBSURFACE UTILITY BY, DATE Matthew Ransleben - Mid Atlantic Utility Locating (703) 378-0100, August 2014

FOR INDEX OF SHEETS SEE SHEET 1A

FHWA-534 DATA 23104

STATE	FEDERAL AID PROJECT	STATE ROUTE	STATE PROJECT	SHEET NO.
VA.	STP-5138( ) (SEE TABULATION BELOW FOR SECTION NUMBERS)	11	U000-138-R04 (SEE TABULATION BELOW FOR SECTION NUMBERS)	1

THIS PROJECT WAS DEVELOPED UTILIZING THE DEPARTMENT'S ENGINEERING DESIGN PACKAGE (GEOPAK).
GEOPAK Computer Identification No. 103013

DESIGNED BY:

Rinker Design Associates, P.C.
www.rdacivil.com
Engineering * Surveying * Land Planning * Transportation * Environmental Services
927 Maple Grove Drive, Suite 105, Fredericksburg, VA 22407 on the web @ www.rdacivil.com
Telephone: (540) 548-4470; Fax: (540) 548-4471
"Turning Challenges into Opportunities"

COMMONWEALTH OF VIRGINIA

PLAN AND PROFILE OF PROPOSED
DRAINAGE IMPROVEMENT PROJECT

CITY OF WINCHESTER
VALLEY AVENUE IMPROVEMENTS

From: 0.08 mi. North of Shawnee Dr. (City Limits)
To: 0.01 mi. South of Middle Road

VDOT Proj. No.: U000-138-R04, C-501
(See Table Below for Section Information)

FUNCTIONAL CLASSIFICATION AND TRAFFIC DATA	
	VALLEY AVENUE
From: To:	Southern Corporate Limits Middle Rd.
FUNCTIONAL CLASSIFICATION	UNDIVIDED ROLLING URBAN PRINCIPAL ARTERIAL
MIN. DESIGN SPEED	40
ADT (2017)	13,000
ADT (2042)	17,600
DHV	1,246
D (%) (design hour)	53.2/46.8
T (%) (design hour)	5%
V (MPH)	*
TC STD.	TC-5.11U
GEOMETRIC STD.	GS-5
DESIGN VEHICLE	BUS-40

*Note: See Plan and Profile Sheets for the Horizontal and Vertical curve design speeds.

CONVENTIONAL SIGNS

STATE LINE
COUNTY LINE
CITY, TOWN OR VILLAGE
RIGHT OF WAY LINE
FENCE LINE
UNFENCED PROPERTY LINE
FENCED PROPERTY LINE
WATER LINE
SANITARY SEWER LINE
GAS LINE
ELECTRIC UNDERGROUND CABLE
TRAVELED WAY
GUARD RAIL
RETAINING WALL
RAILROADS
BASE OR SURVEY LINE
LEVEE OR EMBANKMENT
BRIDGES
CULVERTS
DROP INLET
POWER POLES
TELEPHONE OR TELEGRAPH POLES
TELEPHONE OR TELEGRAPH LINES
HEDGE
TREES
HEAVY WOODS
GROUND ELEVATION
GRADE ELEVATION

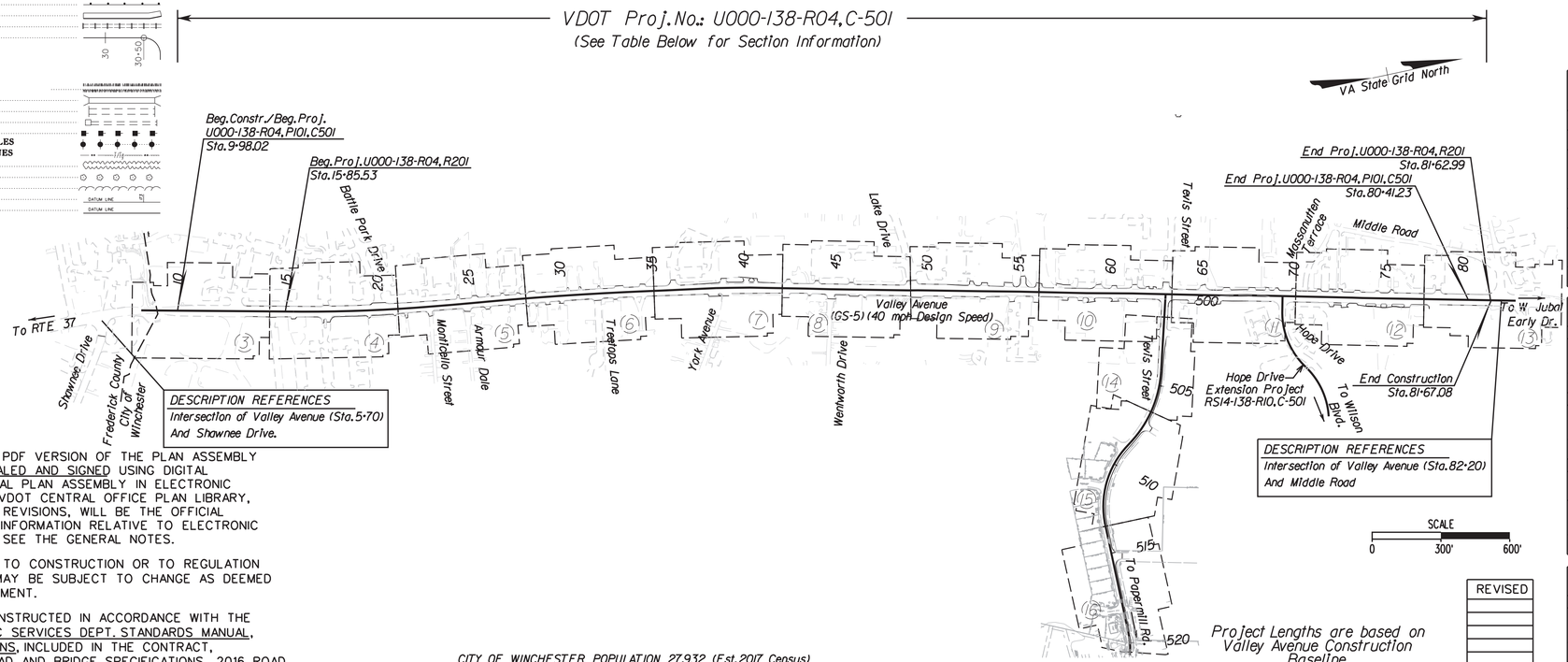

Project Lengths are based on Valley Avenue Construction Baseline.

THE COMPLETE ELECTRONIC PDF VERSION OF THE PLAN ASSEMBLY AS AWARDED, HAS BEEN SEALED AND SIGNED USING DIGITAL SIGNATURES AND THE OFFICIAL PLAN ASSEMBLY IN ELECTRONIC FORMAT IS STORED IN THE VDOT CENTRAL OFFICE PLAN LIBRARY, INCLUDING ALL SUBSEQUENT REVISIONS, WILL BE THE OFFICIAL CONSTRUCTION PLANS. FOR INFORMATION RELATIVE TO ELECTRONIC FILES AND LAYERED PLANS, SEE THE GENERAL NOTES.

DESIGN FEATURES RELATING TO CONSTRUCTION OR TO REGULATION AND CONTROL OF TRAFFIC MAY BE SUBJECT TO CHANGE AS DEEMED NECESSARY BY THE DEPARTMENT.

THIS PROJECT IS TO BE CONSTRUCTED IN ACCORDANCE WITH THE CITY OF WINCHESTER, PUBLIC SERVICES DEPT. STANDARDS MANUAL, THE TECHNICAL SPECIFICATIONS, INCLUDED IN THE CONTRACT, THE DEPARTMENT'S 2016 ROAD AND BRIDGE SPECIFICATIONS, 2016 ROAD AND BRIDGE STANDARDS, 2009 MUTCD, 2011 VIRGINIA SUPPLEMENT TO THE MUTCD, 2011 VIRGINIA WORK AREA PROTECTION MANUAL AND AS AMENDED BY CONTRACT PROVISIONS AND THE COMPLETE ELECTRONIC PDF VERSION OF THE PLAN ASSEMBLY.

ALL CURVES ARE TO BE SUPERELEVATED, TRANSITIONED AND WIDENED IN ACCORDANCE WITH STANDARD TC-5.11ULS, EXCEPT WHERE OTHERWISE NOTED.

THE ORIGINAL APPROVED TITLE SHEET(S), INCLUDING ORIGINAL SIGNATURES, ARE FILED IN THE VDOT CENTRAL OFFICE PLAN LIBRARY. ANY MISUSE OF ELECTRONIC FILES, INCLUDING SCANNED SIGNATURES, IS ILLEGAL AND ENFORCED TO THE FULL EXTENT OF THE LAW.

CITY OF WINCHESTER POPULATION 27,932 (Est. 2017 Census)

STATE PROJECT NO.	SECTION	FEDERAL AID PROJECT NO.	TYPE CODE	UPC NO.	EQUALITIES	LENGTH INCLUDING BRIDGE(S)		LENGTH EXCLUDING BRIDGE(S)		BRIDGE PROJECT NO.	TYPE PROJECT	DESCRIPTION
					FEET	FEET	MILES	FEET	MILES			
U000-138-R04	P101	STP-5138(165)	PENG	103013	none	7043.21	1.334	7043.21	1.334	none	Prelim. Eng.	From 0.08 mi. North of Shawnee Dr.
												To 0.03 mi. South of Middle Road
	R201	STP-5138(188)	ROWA	103013	none	6577.46	1.246	6577.46	1.246	none	Right of Way	From 0.19 mi. North of Shawnee Dr.
												To 0.01 mi. South of Middle Road
	C501	STP-5138(189)	1000	103013	none	7043.21	1.334	7043.21	1.334	none	Construction	From 0.08 mi. North of Shawnee Dr.
												To 0.03 mi. South of Middle Road

TIER 1 PROJECT

LOCALLY ADMINISTERED PROJECTS	
CITY OF WINCHESTER	
RECOMMENDED FOR APPROVAL FOR RIGHT OF WAY ACQUISITION	
12/20/2017	PERRY EISENACH, PE
DATE	PUBLIC SERVICES DIRECTOR
RECOMMENDED FOR APPROVAL FOR CONSTRUCTION	
DATE	PUBLIC SERVICES DIRECTOR

RECOMMENDED FOR APPROVAL FOR RIGHT OF WAY ACQUISITION	
2/2/2018	TERRY JACKSON, PE
DATE	DISTRICT PLANNING AND INVESTMENT MANAGER
2/2/2018	TERRY JACKSON, PE
DATE	DISTRICT PROJECT DEVELOPMENT ENGINEER
APPROVED FOR RIGHT OF WAY ACQUISITION	
2/2/2018	RANDY KISER, PE
DATE	DISTRICT ENGINEER/ADMINISTRATOR

RECOMMENDED FOR APPROVAL FOR CONSTRUCTION	
DATE	DISTRICT PLANNING AND INVESTMENT MANAGER
DATE	DISTRICT PROJECT DEVELOPMENT ENGINEER
APPROVED FOR CONSTRUCTION	
DATE	DISTRICT ENGINEER/ADMINISTRATOR

REVISED

Copyright 2019, Commonwealth of Virginia

PROJECT MANAGER Perry Eisenach, P.E. - City of Winchester (540) 667-2085
SURVEYED BY, DATE Sidney Thomas, L.S. - Rinker Design Associates (703) 368-7373, October 2014
DESIGN BY John A. Glometti, P.E. - Rinker Design Associates (703) 334-0060
SUBSURFACE UTILITY BY, DATE Matthew Bansiem - Mid Atlantic Utility Locating (703) 378-0100, August 2014

Rinker Design Associates, P.C.
Civil Engineering - Surveying - Environmental
Transportation - Right of Way Services
Office Locations
4001 Fairfax Drive, Suite 100, Arlington, VA 22203, Phone: (703) 368-7373, Fax: (703) 522-0060
4001 Fairfax Drive, Suite 100, Arlington, VA 22203, Phone: (703) 334-0060, Fax: (703) 522-0060
4001 Fairfax Drive, Suite 100, Arlington, VA 22203, Phone: (703) 368-7373, Fax: (703) 522-0060
4001 Fairfax Drive, Suite 100, Arlington, VA 22203, Phone: (703) 368-7373, Fax: (703) 522-0060

INDEX OF SHEETS & LOCATION MAP

REVISED	STATE	STATE ROUTE	STATE PROJECT	SHEET NO.
	VA.	11	U000-138-R04 C501	1A

DESIGN FEATURES RELATING TO CONSTRUCTION OR TO REGULATION AND CONTROL OF TRAFFIC MAY BE SUBJECT TO CHANGE AS DEEMED NECESSARY BY THE DEPARTMENT

INDEX OF SHEETS

SHEET NUMBER		DESCRIPTION OF SHEETS
PROJECT INDEX OF SHEETS		
VDOT Project U000-138-R04,C501		

Sheet No.	1	Title Sheet for Valley Avenue
Sheet No.	1A	Index of Sheets and Project Location Map
Sheet No.	1B-1B(1)	Right of Way Data Sheet
Sheet No.	1C	Revision Data Sheet
Sheet No.	1D	Underground Utilities Test Hole Information
Sheet No.	1E - 1E(1)	Survey Control and Traverse Data
Sheet No.	1F	Horizontal Construction Alignment Data
Sheet No.	1G	Not Assigned
Sheet No.	1H	Not Assigned
Sheet No.	1I	Not Assigned
Sheet No.	1J	Temporary Traffic Control Plan - General Notes
Sheet No.	1J(1)	Temporary Traffic Control Plan - Sequence of Construction
Sheet No.	1J(2)	Temporary Traffic Control Plan - Typical Sections
Sheet No.	1K - 1K(6)	Temporary Traffic Control Plan - Phase 1
Sheet No.	1L - 1L(5)	Temporary Traffic Control Plan - Phase 2
Sheet No.	1M	Not Assigned
Sheet No.	1N	Erosion Control Plan Narrative
Sheet No.	1O	Not Assigned
Sheet No.	1P(3) - 1P(16)	Erosion Control Plan Phase 1
Sheet No.	1Q(3) - 1Q(16)	Erosion Control Plan Phase 2
Sheet No.	1R	Existing Drainage Descriptions
Sheet No.	1S - 1S(8)	Entrance Grading Details
Sheet No.	2	Project General Notes and Legend
Sheet No.	2A - 2A(6)	Typical Sections
Sheet No.	2B	Not Assigned
Sheet No.	2C	Not Assigned
Sheet No.	2D(1) - 2D(3)	SWPPP General Information Sheets
Sheet No.	3	Plan Sheet Sta.8+00.00 to 15+00.00
Sheet No.	3A	Profile Sheet Sta.8+00.00 to 15+00.00
Sheet No.	4	Plan Sheet Sta.15+00.00 to 22+00.00
Sheet No.	4A	Profile Sheet Sta.15+00.00 to 22+00.00
Sheet No.	5	Plan Sheet Sta.22+00.00 to 29+00.00
Sheet No.	5A	Profile Sheet Sta.22+00.00 to 29+00.00
Sheet No.	6	Plan Sheet Sta.29+00.00 to 36+00.00
Sheet No.	6A	Profile Sheet Sta.29+00.00 to 36+00.00
Sheet No.	7	Plan Sheet Sta.36+00.00 to 43+00.00
Sheet No.	7A	Profile Sheet Sta.36+00.00 to 43+00.00
Sheet No.	8	Plan Sheet Sta.43+00.00 to 50+00.00
Sheet No.	8A	Profile Sheet Sta.43+00.00 to 50+00.00
Sheet No.	9	Plan Sheet Sta.50+00.00 to 57+00.00
Sheet No.	9A	Profile Sheet Sta.50+00.00 to 57+00.00
Sheet No.	10	Plan Sheet Sta.57+00.00 to 64+25.00
Sheet No.	10A	Profile Sheet Sta.57+00.00 to 64+00.00
Sheet No.	11	Plan Sheet Sta.64+25.00 to 71+00.00
Sheet No.	11A	Profile Sheet Sta.64+00.00 to 71+00.00
Sheet No.	12	Plan Sheet Sta.71+00.00 to 78+00.00
Sheet No.	12A	Profile Sheet Sta.71+00.00 to 78+00.00
Sheet No.	13	Plan Sheet Sta.78+00.00 to 83+00.00
Sheet No.	13A	Profile Sheet Sta.78+00.00 to 83+00.00
Sheet No.	14	Tevis St.Plan Sheet Sta.501+25.00 to 506+50.00
Sheet No.	14A	Tevis St.Profile Sheet Sta.500+00.00 to 506+50.00
Sheet No.	15	Tevis St.Plan Sheet Sta.506+50.00 to 513+50.00
Sheet No.	15A	Tevis St.Profile Sheet Sta.506+50.00 to 513+50.00
Sheet No.	16	Tevis St.Plan Sheet Sta.513+50.00 to 519+87.20
Sheet No.	16A	Tevis St.Profile Sheet Sta.513+50.00 to 519+87.20
Sheet No.	17 - 17(28)	Drainage Descriptions
Sheet No.	17(3) - 17(13)	Storm Sewer Profiles
Sheet No.	18(1)	Traffic Signal Plans
Sheet No.	18(2)	Not Assigned
Sheet No.	18(3)	Traffic Signal Plans
Sheet No.	19 - 19(16)	Signing and Pavement Marking Plans
Sheet No.	20 - 20(17)	Water & Sewer Relocation Plans
Cross Sections		
Sheet No.	1	Project Index of Cross Sections
Sheet No.	2 thru 74	Valley Avenue, Route 11
Sheet No.	75 thru 95	Tevis Street
INDEX PLAN SET NOTES:		
** Denotes Sheets that are not included within this Plan Set		
153 Total plan and profile set sheets		
95 Total cross section sheets		

GEOPAK COMPUTER IDENTIFICATION NO.103013

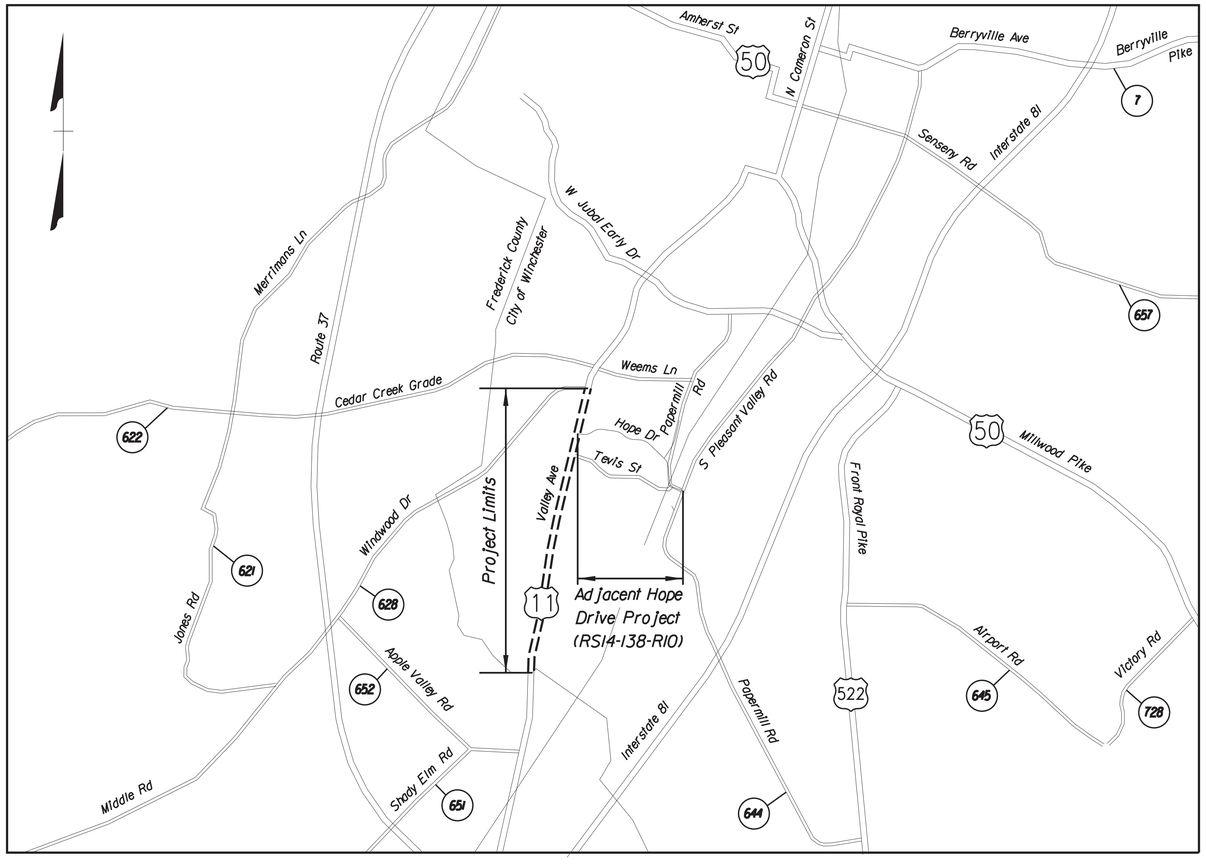

VALLEY AVENUE PROJECT LOCATION MAP
Frederick County & City of Winchester, Virginia
1" = 2000' Scale

PROJECT	SHEET NO.
U000-138-R04	1A

3/3/2020
2:45:31 PM

d103013001b01.dgn
Plotted By: mbeales

PROJECT MANAGER Perry Eisenach, P.E. - City of Winchester (540) 667-2085
SURVEYED BY, DATE Sidney Thomas, L.S. - Rinker Design Associates (703) 368-7373, October 2014
DESIGN BY John A. Glomett, P.E. - Rinker Design Associates (703) 334-0060
SUBSURFACE UTILITY BY, DATE Matthew Bansiem - Mid Atlantic Utility Locating (703) 378-0100, August 2014

Office Locations
Rinker Design Associates, P.C.
Civil Engineering • Surveying • Environmental
Transportation • Land Development • Right of Way Services
SINCE ESTABLISHED IN MCMLXXVIII
4651 Daniels Parkway
Suite 100
Fort Myers, FL 33912
Phone: (239) 768-0600
Fax: (239) 768-0601
4651 Daniels Parkway
Suite 100
Fort Myers, FL 33912
Phone: (239) 768-0600
Fax: (239) 768-0601
4651 Daniels Parkway
Suite 100
Fort Myers, FL 33912
Phone: (239) 768-0600
Fax: (239) 768-0601

Right of Way Data Sheet

(For informational purposes only. Please see plats for detailed information.)

REVISED	STATE	STATE ROUTE	STATE PROJECT	SHEET NO.
08-20-2018 01-23-2018 03-01-2019 06-24-2019	VA.	11	U000-138-R04 R201, C501	1B

DESIGN FEATURES RELATING TO CONSTRUCTION OR TO REGULATION AND CONTROL OF TRAFFIC MAY BE SUBJECT TO CHANGE AS DEEMED NECESSARY BY THE DEPARTMENT

City/County: City of Winchester

UPC No.: 103013

PARCEL NO.	LANDOWNER	SHEET NO.	AREA TOTAL Ac./Sq. Ft.	FEE TAKING SQ. FT.	FEE TAKING Ac.	AQUISITION R/W Ac.	FEE REMAINDER SQ. FT.	FEE REMAINDER Ac.	EASEMENT DRAINAGE SQ. FT.	EASEMENT SIGN SQ. FT.	EASEMENT SIGNAL SQ. FT.	EASEMENT SIDEWALK SQ. FT.	EASEMENT PUBLIC UTILITY SQ. FT.	EASEMENT TEMPORARY SQ. FT. Constr.	PROFFERS YES / NO
001	IRVIN R. ZETLIN, TRUSTEE	4	0.4080				17,772	0.4080							
002	OPEQUON CENTER CONDOMINIUM ASSOCIATION	4	4.8861				212,839	4.8861					291	2,675	
003	MOLDEN REAL ESTATE CORPORATION	4,5	1.6390				71,395	1.6390					396	1,376	
004	GR PR, LLC	5	0.1607				7,000	0.1607							
005	GR PR, LLC	5	0.1607				7,000	0.1607							
006	GR PR, LLC	5	0.1411				6,146	0.1411							
007	BRYAN L. RENNER	5	0.1607				7,000	0.1607							
008	GARY L. RENNER AND PATTI G. RENNER	5	0.2864				12,476	0.2864							
009	A & R RENTALS, LLC	5	0.4290				18,687	0.4290							
010	ALHARMOOSH PROPERTIES MANAGEMENT	5	0.4020				17,511	0.4020							
011	ALHARMOOSH PROPERTIES MANAGEMENT	5	0.7459				32,491	0.7459					220		
012	BALRAM, LLC	5,6	1.2691				55,282	1.2691					184		
	BALRAM, LLC	6	5.0500				219,978	5.0500							
014	DANIEL L. BOYGE, TRUSTEE WINCHESTER LAND AND TRUST	6	0.3440				14,985	0.3440							
015	BIPIN PATEL AND VINA PATEL AND GAURAV PARIKH AND SHEILA PARIKH	6	0.3440				14,985	0.3440							
016	RICHARD R. BILLMEYER	6	0.3440				14,985	0.3440							
017	RONALD S. SIMKHOVITCH, SR. AND VELMA B. SIMKHOVITCH	6	3.9520				172,149	3.9520							
018	PGAM, LLC	6,7	1.9075				83,091	1.9075							
019	ADVERTISING, INC.	7	0.6887				30,000	0.6887							
020	BYRD ENTERPRISES, L.L.C.	6,7	1.9362				84,341	1.9362					304		
021	WILLIAM F. EDMONSON, SUCCESSOR TRUSTEE OF THE TENNYSON LAND TRUST	7	0.2066				8,999	0.2066							
022	SHIV KUMAR	7	0.2066				8,999	0.2066							
023	WASH J & L, INC. FORMERLY ROMAN CORPORATION	7	1.0076				43,891	1.0076				852		2,748	
024	MALLOY PROPERTIES III, LLC	7,8	1.4053				61,215	1.4053				305		547	
025	AIKENS INVESTMENTS LIMITED PARTNERSHIP, L.L.P.	7,8	2.6083				113,618	2.6083							
026	DUNCAN BROTHERS TIRE CO., INC.	8	0.3696				16,100	0.3696							
027	MALLOY PROPERTIES III, LLC	8,9	3.8663				168,416	3.8663							
	MALLOY PROPERTIES III, LLC	9	0.5516				24,028	0.5516							
029	DALAJI, INC.	9	1.7610				76,709	1.7610							
030	STEPHEN M. VANN SUBJ. TO LIFE ESTATE TO LINDEN A. VANN, SR. & THELMA D. VANN	9	0.8030				34,979	0.8030							
031	ANS PROPERTY, LLC	9	4.5610				198,677	4.5610						2,342	
032	CARMEL ENTERPRISES, LLC	9,10	0.5739				24,999	0.5739							
033	789, LLC	10	1.6065				69,979	1.6065							
034	NICHOLAS F. TAUBMAN	10	1.0037				43,721	1.0037							
035	FREDERICK K. PARSONS	11	0.9560				41,643	0.9560							
036	PINE MOTOR COMPANY, INC.	10,11	0.5165				22,499	0.5165						2,103	
037	H.N. FUNKHOUSER AND CO., INC.	11	0.3303				14,388	0.3303							
038	THE KENTLAND FOUNDATION, INC.	11	5.2500				228,690	5.2500							
039	PINE MOTOR COMPANY, INC.	11	0.9600				41,818	0.9600						1,539	
040	PINE MOTOR COMPANY, INC.	11	0.2120				9,235	0.2120							
* 041	BRANCH BANKING AND TRUST COMPANY OF VIRGINIA	11	2.2610				98,489	2.2610							
042	CAMBRIDGE PROPERTY HOLDINGS, LLC	11	0.2570				11,195	0.2570							
043	BAGRI PROPERTIES, LLC	11,12	0.7969				34,713	0.7969							
* 044	WACHOVIA BANK, NATIONAL ASSOCIATION	11,12	1.4090				61,376	1.4090							
045	MO YAM CHAN (SOLE HEIR WITH RIGHT OF SURVIVORSHIP)	12	0.6175				26,898	0.6175						268	
046	LEWIS & SONS, L.L.C.	12	0.3634				15,830	0.3634						208	
047	H W A ENTERPRISES	12	1.8365				79,998	1.8365				193		2,939	
048	STONEMEADOW REALTY, LLC	12	0.4590				19,994	0.4590							
049	GRASSO AND SONS DEVELOPMENT, LLC	12	1.3070				56,933	1.3070							
050	TAREK H. MOUNIB	12	0.2473				10,772	0.2473				248		204	
051	MOLDEN REAL ESTATE CORPORATION	12,13	1.9070				83,069	1.9070				65		1,406	
052	ANS PROPOERTY, LLC	4	1.2450				54,232	1.2450							
053	THOMAS J. BENNETT AND PHYLLIS A. BENNETT	5	0.5760				25,091	0.5760							
054	DAVID B. WILLIAMSON AND MELINDA K. WILLIAMSON	5	0.6940				30,231	0.6940							
055	GEORGE BOTSCHIN	5,6	0.2640				11,500	0.2640							
056	MALLOY PROPERTIES III, LLC	8	0.4649				20,251	0.4649							
057	MALLOY PROPERTIES III, LLC	8	1.1359				49,480	1.1359							
059	CALJACK'S, LLC	8	0.2627				11,443	0.2627							
061	PHTH PROPERTIES, LLC	10	0.9110				39,683	0.9110						307	
062	H.N. FUNKHOUSER AND CO., INC.	10	0.6930				30,187	0.6930							
064	WALTER ENTERPRISES, LC.	13	19.4040				845,238	19.4040							
065	SILVER LAKE, LLC	13	1.0180				44,344	1.0180							
066	CHRISTINA TSENG	9	0.7163				31,202	0.7163							
067	ATEETHI SERVICES, LLC	9,10	2.7670				120,531	2.7670							
068	AIKENS INVESTMENTS LIMITED	8	0.5303				23,100	0.5303							

* Parcels 041 & 044 Fee Taking and Easements are being acquired as part of the adjacent Hope Drive project (RS14-138-R10)

PROJECT MANAGER Perry Eisenach, P.E. - City of Winchester (540) 667-2085
SURVEYED BY, DATE Sidney Thomas, L.S. - Rinker Design Associates (703) 368-7373, October 2014
DESIGN BY John A. Glomelli, P.E. - Rinker Design Associates (703) 334-0060
SUBSURFACE UTILITY BY, DATE Matthew Bansiem - Mid Atlantic Utility Locating (703) 378-0100, August 2014

Office Locations
Rinker Design Associates, P.C.
Civil Engineering • Surveying • Environmental
Transportation • Land Development • Right of Way Services
RDA
SINCE INCORPORATED IN 1978
207 Mark Drive Drive
Suite 100
Roanoke, VA 24019
Phone: (540) 563-0210
Fax: (540) 563-0211
4001 Dominion Boulevard
Suite 100
Glen Allen, VA 23060
Phone: (804) 747-0900
Fax: (804) 747-0901
4309 Chain Bridge Road
Suite 100
Fairfax, VA 22030
Phone: (703) 591-2626
Fax: (703) 591-2627

Right of Way Data & Demolition Summary Sheet

REVISED	STATE	STATE ROUTE	STATE PROJECT	SHEET NO.
03-01-2019 04-24-2019 03-03-2020	VA.	11	U000-138-R04 R201, C501	1B(1)

DESIGN FEATURES RELATING TO CONSTRUCTION OR TO REGULATION AND CONTROL OF TRAFFIC MAY BE SUBJECT TO CHANGE AS DEEMED NECESSARY BY THE DEPARTMENT

City/County: City of Winchester

UPC No.: 103013

PARCEL NO.	LANDOWNER	SHEET NO.	AREA: TOTAL Ac./Sq. Ft.	FEE TAKING SQ. FT.	FEE TAKING Ac.	AQUISITION R/W Ac.	FEE REMAINDER SQ. FT.	FEE REMAINDER Ac.	EASEMENT: DRAINAGE SQ. FT.	SIGN SQ. FT.	SIGNAL SQ. FT.	SIDEWALK SQ. FT.	PUBLIC UTILITY SQ. FT.	TEMPORARY SQ. FT. Constr.	PROFFERS YES / NO
~~069~~	~~RUBBERMAID COMMERCIAL PRODUCTS, INC.~~	~~3~~	~~42.8800~~				~~1,867,853~~	~~42.8800~~							
~~070~~	~~RUBBERMAID COMMERCIAL PRODUCTS, INC.~~	~~3,4~~	~~1.1409~~				~~49,698~~	~~1.1409~~							
~~071~~	~~JENKINS COOPER, LLC~~	~~6~~	~~0.2869~~				~~12,497~~	~~0.2869~~							
~~072~~	~~JENKINS COOPER, LLC~~	~~6~~	~~0.2823~~				~~12,297~~	~~0.2823~~							
~~073~~	~~JENKINS COOPER, LLC~~	~~6~~	~~1.2777~~				~~55,657~~	~~1.2777~~							
~~074~~	~~GEORGE AND JOHN MILLER PARTNERSHIP~~	~~6~~	~~1.3070~~				~~56,933~~	~~1.3070~~							
~~075~~	~~SEE PROPERTIES, LP., LLP.~~	~~9~~	~~1.9075~~				~~83,091~~	~~1.9075~~							
~~076~~	~~PAUL H. ENSOGNA, SR. AND MARY J. ENSOGNA, TRUSTEES OF THE PAUL H. ENSOGNA, SR. AND MARY J. ENSOGNA LIVING TRUST~~	~~10~~	~~1.6064~~				~~69,975~~	~~1.6064~~							
~~077~~	~~JOLEEN, LC.~~	~~3~~	~~2.0832~~				~~90,744~~	~~2.0832~~							
~~078~~	~~JOLEEN, LC.~~	~~3,4~~	~~4.2954~~				~~187,108~~	~~4.2954~~							
~~079~~	~~O'MALLEY, LLC.~~	~~4,5~~	~~4.6610~~				~~203,033~~	~~4.6610~~							
~~080~~	~~LESTER V. WHITACRE, TRUSTEE OF THE LESTER V. WHITEACRE TRUST AND ROXIE ANN WHITACRE, TRUSTEE OF THE ROXIE ANN WHITACRE TRUST~~	~~8~~	~~0.5076~~				~~22,111~~	~~0.5076~~							
~~081~~	~~LESTER V. WHITACRE, TRUSTEE OF THE LESTER V. WHITEACRE TRUST AND ROXIE ANN WHITACRE, TRUSTEE OF THE ROXIE ANN WHITACRE TRUST~~	~~8~~	~~0.5529~~				~~24,084~~	~~0.5529~~							
~~082~~	~~GJP, LLC~~	~~10~~	~~0.6016~~				~~26,206~~	~~0.6016~~							
~~083~~	~~MAX G. TOTTEN AND DIANA E. TOTTEN~~	~~10~~	~~0.6880~~				~~29,969~~	~~0.6880~~							
~~084~~	~~H.N. FUNKHOUSER AND CO., INC.~~	~~10~~	~~0.5165~~				~~22,499~~	~~0.5165~~							
~~085~~	~~AUTOZONE, INC.~~	~~12,13~~	~~1.0221~~				~~44,523~~	~~1.0221~~							
~~086~~	~~JOLEEN, LC.~~	~~4~~	~~3.2383~~				~~141,060~~	~~3.2383~~							
087	MOLDEN REAL ESTATE CORPORATION	12,13	1.9070				83,069	1.9070				113			

DEMOLITION OF BUILDING/CLEARING OF PARCEL/CLOSING OF WELL/UNDERGROUND STORAGE TANK REMOVAL SUMMARY

SHEET NO.	PARCEL NO.	DEMOLITION NO.	LANDOWNER	STATION	DESCRIPTION
		101	NOT ASSIGNED		
		102	NOT ASSIGNED		
4	003	701	MOLDEN REAL ESTATE CORPORATION	21+10 RT	REMOVE/RELOCATE KERNSTOWN APARTMENTS SIGN (WITHIN RW)
7	023	702	WASH J & L, INC. FORMERLY ROMAN CORPORATION	40+00 LT	REMOVE/RELOCATE EXIT SIGN
7	023	703	WASH J & L, INC. FORMERLY ROMAN CORPORATION	40+90 LT	RELOCATE NO LOITERING SIGN (WITHIN RW)
7	023	704	WASH J & L, INC. FORMERLY ROMAN CORPORATION	40+90 LT	REMOVE/RELOCATE ENTRANCE SIGN
11	040	705	PINE MOTOR COMPANY, INC.	69+15 LT	RELOCATE PARSONS KIA SIGN (WITHIN RW)
8	027	706	MALLOY PROPERTIES III, LLC	47+40 RT	RELOCATE DO NOT ENTER SIGN (WITHIN RW)
5	011	707	ALHARMOOSH PROPERTIES MANAGEMENT LLC	28+05 LT	RELOCATE FLAG POLE (WITHIN RW)
5	011	708	ALHARMOOSH PROPERTIES MANAGEMENT LLC	28+20 LT	RELOCATE FLAG POLE (WITHIN RW)

PROJECT MANAGER Perry Eisenach, P.E. - City of Winchester (540) 667-2085
SURVEYED BY, DATE Sidney Thomas, L.S. - Rinker Design Associates (703) 368-7373, October 2014
DESIGN BY John A. Glometti, P.E. - Rinker Design Associates (703) 334-0060
SUBSURFACE UTILITY BY, DATE Matthew Bansiem - Mid Atlantic Utility Locating (703) 378-0100, August 2014

Revision Data Sheet

REVISED	STATE	STATE ROUTE	STATE PROJECT	SHEET NO.
	VA.	11	U000-138-R04 R201,C501	1C

DESIGN FEATURES RELATING TO CONSTRUCTION OR TO REGULATION AND CONTROL OF TRAFFIC MAY BE SUBJECT TO CHANGE AS DEEMED NECESSARY BY THE DEPARTMENT

State Project: U000-138-R04, P101, R201, C501
Federal Project: STP-5138(165)
From: 0.08 miles North of Shawnee Dr.
To: 0.01 miles South of Middle Road
UPC Number: 103013

06-14-2018 R/W Revision #1
The following revisions were made by Matthew A. Beales
The revisions completed are as follows:
Sheet 1B -- Parcels 020,034,045,046,047,049,050,051 easements revised.
Sheet 7 -- Parcel 020 easements revised.
Sheet 10 -- Parcel 034 easement removed.
Sheet 12 -- Parcels 045,046,047,049,050,051 easements revised.
Sheet 13 -- Parcel 051 easements revised.

08-20-2018 R/W Revision #2
The following revisions were made by Matthew A. Beales
The revisions completed are as follows:
Sheet 1B -- Parcel 039 Temporary Construction easement added.
Sheet 11 -- Parcel 039 Temporary Construction easement added.

12-13-2018 R/W Revision #3
The following revisions were made by Matthew A. Beales
The revisions completed are as follows:
Sheet 4 -- Parcel 002 - Added "Do Not Disturb" labels to frontage trees.
Sheet 1P(4) -- Parcel 002 - Added Temp. Silt Fence to protect frontage trees.

01-23-2019 R/W Revision #4
The following revisions were made by Matthew A. Beales
The revisions completed are as follows:
Sheet 1B - Parcel 024,027,056 & 057 - Owner revised.
Sheet 7 -- Parcel 024 - Owner revised.
Sheet 8 -- Parcel 024,027,056 & 057 - Owner revised.
Sheet 9 -- Parcel 027 - Owner revised.

03-01-2019 R/W Revision #5
The following revisions were made by Matthew A. Beales
The revisions completed are as follows:
Sheet 1B - Parcel 023 Permanent Sidewalk & Temporary Construction easements revised.
Sheet 1B(1) - Demo.# 101 removed.
Sheet 7 -- Parcel 023 Permanent Sidewalk & Temporary Construction easement revised and sidewalk modified to avoid impact to car wash sign (labeled "Do Not Disturb").

04-24-2019 R/W Revision #6
The following revisions were made by Matthew A. Beales
The revisions completed are as follows:
Sheet 1B(1) - Demo.# 102 removed.
Sheet 4 -- Demo.# 102 removed and stone pillar labeled "Do Not Disturb".

06-24-2019 R/W Revision #7
The following revisions were made by Matthew A. Beales
The revisions completed are as follows:
Sheet 1B -- Parcel 049 Temporary Construction easement removed.
Sheet 12 -- Parcel 049 Temporary Construction easement removed and retaining wall, sidewalk & entrance modified to avoid impact to Parcel 049.
Sheet 12a -- Retaining Wall profile revised.

03-03-2020 R/W Revision #8
The following revisions were made by Matthew A. Beales
The revisions completed are as follows:
Sheet 1B(1) -- Added Parcel 087 - Sidewalk easement added.
Sheet 12 -- Added Parcel 087 - Sidewalk easement added.
Sheet 13 -- Added Parcel 087 - Sidewalk easement added.

PROJECT	SHEET NO.
U000-138-R04	1C

Rinker Design Associates, P.C.
Civil Engineering - Surveying - Environmental
Transportation - Right of Way Services
Office Locations
Sterling, VA 20164 - 46175 Westlake Legacy Circle, Suite 100 - Tel: (703) 450-4900 - Fax: (703) 450-5545
Ashburn, VA 20147 - 44983 Knoll Square, Suite 100 - Tel: (703) 729-8000 - Fax: (703) 729-8001
Fairfax, VA 22030 - 3955 Pender Drive, Suite 110 - Tel: (703) 385-1000 - Fax: (703) 385-1000
Front Royal, VA 22630 - 1401 Mega Drive, Suite 100 - Tel: (540) 635-9110 - Fax: (540) 635-9111
Winchester, VA 22601 - 1400 Jim Bishop Drive, Suite 100 - Tel: (540) 667-2085 - Fax: (540) 667-2086
SERVING YOU WITH PRIDE SINCE 1978

PROJECT MANAGER Perry Eisenach, P.E. - City of Winchester (540) 667-2085
SURVEYED BY, DATE Sidney Thomas, L.S. - Rinker Design Associates (703) 368-7373, October 2014
DESIGN BY John A. Glometti, P.E. - Rinker Design Associates (703) 334-0060
SUBSURFACE UTILITY BY, DATE Matthew Bansiem - Mid Atlantic Utility Locating (703) 378-0100, August 2014

Underground Utilities Test Hole Information

REVISED	STATE	ROUTE	PROJECT	SHEET NO.
	VA.	11	U000-138-R04 C501	1D

DESIGN FEATURES RELATING TO CONSTRUCTION OR TO REGULATION AND CONTROL OF TRAFFIC MAY BE SUBJECT TO CHANGE AS DEEMED NECESSARY BY THE DEPARTMENT

PLAN SHEET	TEST HOLE	DISTANCE (FEET)	(1) STATION & ROADWAY	OWNER	TYPE OF FACILITY	(2) ELEV. (FEET)	(3) CONFLICT YES/NO	(4) REMARKS	UTILITY (5) ADJUSTMENT REQUIRED
4	1	34.07 Rt.	17+49 Rte.11	1	4" Steel Gas	749.92	N	No Conflict Found	N
4	2	34.73 Rt.	20+22 Rte.11	1	4" P.E.Gas	755.25	N	1.03' Seperation - Hand Digging Required	N
5	3	23.32 Lt.	24+10 Rte.11	2	24" D.I.Water	760.03	Y	Direct Conflict Proposed Drainage	Y
5	4	24.61 Rt.	24+09 Rte.11	1	4" Steel Gas	760.55	Y	Direct Conflict Proposed Drainage	Y
5	5	20.25 Lt.	26+48 Rte.11	2	24" D.I.Water	764.35	Y	Direct Conflict Proposed Drainage	Y
5	6	20.08 Lt.	28+79 Rte.11	2	24" D.I.Water	766.49	Y	1" Seperation to Bottom of Drainage Pipe	Y
6	7	20.86 Lt.	31+48 Rte.11	2	24" D.I.Water	769.77	Y	Direct Conflict Proposed Drainage	Y
6	8	31.76 Rt.	32+86 Rte.11	2	24" D.I.Water	770.68	Y	Direct Conflict Proposed Drainage	Y
6	9	31.16 Rt.	33+38 Rte.11	2	1" Copper Service	771.48	Y	10" Seperation to Drainage	Y
7	10	28.19 Rt.	39+58 Rte.11	1	1.5" Steel Service	772.19	Y	Less Than 2' Deep	Y
6	11	31.29 Rt.	33+21 Rte.11	1	1" P.E.Service	771.14	Y	7" Seperation to Drainage	Y
7	12	38.41 Rt.	39+77 Rte.11	2	8" D.I.Water	770.15	Y	Direct Conflict Drainage	Y
7	13	28.28 Lt.	40+05 Rte.11	1	4" P.E.Gas	771.11	Y	3" Seperation to Drainage	Y
7	14	30.89 Lt.	41+56 Rte.11	1	4" P.E.Gas	771.45	Y	Direct Conflict Drainage	Y
7	15	19.52 Lt.	41+91 Rte.11	2	24" D.I.Water	772.75	Y	4" Seperation to Drainage	Y
8	16	21.13 Lt.	43+64 Rte.11	2	24" D.I.Water	774.93	N	7' Seperation to Drainage	N
8	17	12.81 Rt.	43+99 Rte.11	2	10" Cast Iron Water	774.28	N	7' Seperation to Drainage	N
8	18	17.54 Rt.	45+06 Rte.11	1	2" P.E.Gas	775.45	N	No Conflict Found	N
8	19	23.55 Lt.	46+44 Rte.11	2	24" D.I.Water	774.09	N	7.5' Seperation to Drainage	N
8	20	32.97 Lt.	47+16 Rte.11	1	4" P.E.Gas	773.43	Y	Constructibility Conflict STR 8-3	Y
8	21	33.40 Lt.	49+21 Rte.11	1	4" P.E.Gas	769.72	Y	<3' Depth In Right of Way	Y
8	22	23.90 Lt.	49+22 Rte.11	2	24" D.I.Water	769.20	Y	<3' Depth In Right of Way	Y
8	23	18.93 Lt.	49+82 Rte.11	3	(4) 4" PVC	769.49	Y	<3' Depth In Right of Way	Y
8	24	18.63 Lt.	50+42 Rte.11	1	2" Gas Service	767.35	Y	<3' Depth In Right of Way	Y
8	25	18.94 Lt.	50+47 Rte.11	4	1" Direct Bury Comm.	767.12	Y	<3' Depth In Right of Way	Y
9	26	32.33 Lt.	51+00 Rte.11	1	4" P.E.Gas	765.09	N	4.5' Seperation to Drainage	N
9	27	24.95 Lt.	51+00 Rte.11	2	24" D.I.Water	764.48	N	2' Seperation to Drainage	N
9	28	32.46 Lt.	54+20 Rte.11	1	4" P.E.Gas	757.92	Y	Parallel Conflict w/ Drainage	Y
10	29	28.49 Lt.	57+50 Rte.11	1	2" P.E.Gas	754.61	N	1' Seperation to Drainage	N
10	30	32.38 Lt.	57+75 Rte.11	1	4" P.E.Gas	753.41	Y	Conflict STR 10-2	Y
10	31	23.75 Lt.	57+79 Rte.11	2	24" D.I.Water	753.75	Y	Direct Conflict w/ Drainage	Y
10	32	24.82 Rt.	57+88 Rte.11	1	1" P.E.Gas Service	755.01	Y	<3' Depth In Right of Way	Y
10	33	15.64 Rt.	58+69 Rte.11	2	2" Copper Service	753.50	Y	9" Seperation to Drainage	Y
10	34	16.17 Rt.	59+74 Rte.11	2	1" Copper Service	754.72	N	2.5' Seperation to Drainage	N
10	35	17.42 Rt.	60+00 Rte.11	4	1" Direct Bury Comm	753.75	N	1'-10" Seperation to Drainage	N
10	36	17.08 Rt.	60+24 Rte.11	2	8" D.I.Water	753.88	N	1.5' Seperation to Drainage	N
10	37	21.68 Lt.	60+74 Rte.11	2	24" D.I.Water	754.32	Y	11" Seperation w/ Drainage	Y
10	38	19.23 Lt.	63+55 Rte.11	2	24" D.I.Water	755.15	N	5' Seperation w/ Drainage	N
11	39	31.59 Lt.	66+55 Rte.11	2	6" C.I.Water	755.46	Y	1/2" Seperation w/ Drainage	Y
14	40	11.89 Rt.	229+10 Tevis	2	10" C.I.Water	753.84	N	5' Seperation w/ Drainage	N
14	41	7.13 Lt.	226+36 Tevis	2	10" D.I.Water	752.09	N	3' Seperation w/ Drainage	N
11	42	21.64 Lt.	66+68 Rte.11	2	24" D.I.Water	755.68	Y	Direct Conflict w/ Drainage	Y
11	43	19.30 Rt.	67+10 Rte.11	1	3" Steel Gas	757.34	Y	<3' Depth In Right of Way	Y
12	44	22.50 Lt.	71+84 Rte.11	2	24" D.I.Water	757.58	Y	3" Seperation w/ Drainage	Y
12	45	31.84 Lt.	72+21 Rte.11	1	1" P.E.Gas Service	757.72	N	2' Seperation w/ Drainage	N
12	46	31.87 Lt.	72+54 Rte.11	2	4" C.I.Water	756.82	Y	6" Seperation w/ Drainage	Y
12	47	31.53 Rt.	73+26 Rte.11	1	3" Steel Gas	759.36	Y	Conflict w/ Drainage	Y
12	48	33.55 Rt.	73+85 Rte.11	2	4" C.I.Water	758.60	Y	<3' Depth In Right of Way	Y
12	49	29.54 Rt.	75+11 Rte.11	1	3' Steel Gas	759.50	Y	Conflict w/ Drainage	Y

PLAN SHEET	TEST HOLE	DISTANCE (FEET)	(1) STATION & ROADWAY	OWNER	TYPE OF FACILITY	(2) ELEV. (FEET)	(3) CONFLICT YES/NO	(4) REMARKS	UTILITY (5) ADJUSTMENT REQUIRED
13	50	31.88 Rt.	78+21 Rte.11	2	N/A Water	754.98	N	1' Seperation w/ Drainage	N
N/A	51	N/A	N/A	N/A	N/A	N/A	N/A	Number Not Used	N/A
N/A	52	N/A	N/A	N/A	N/A	N/A	N/A	Number Not Used	N/A
14	53	24.89 Rt.	225+11 Rte.11	1	4" P.E.Gas	750.92	Y	Conflict STR 14-5	Y
14	54	10.60 Rt.	223+61 Rte.11	2	6" D.I.Water	745.14	Y	Conflict w/ Drainage	Y
14	55	10.12 Rt.	223+30 Rte.11	5	3" PVC	745.86	Y	<3' Depth In Right of Way	Y
14	56	10.80 Rt.	223+11 Rte.11	3	5" PVC	745.05	Y	Conflict w/ Drainage	Y
15	57	19.02 Rt.	222+31 Rte.11	1	4" P.E.Gas	743.33	Y	Conflict w/ STR 15-1	Y
15	58	13.99 Rt.	221+00 Rte.11	1	4" P.E.Gas	741.79	Y	Conflict w/ STR 15-2	Y

UTILITY OWNERS

1. Washington Gas
   Mr. David Falkenstein
   350 Hillandale Lane
   PO Box 2400
   Winchester, VA 22604-1600
   O: (540) 868-7911
   E: df11748@washgas.com

2. City of Winchester
   Mr. Drew Brady
   Rouss City Hall
   15 N. Cameron Street
   Winchester, VA 22601
   O: (540) 974-8724
   E: drew.brady@winchesterva.gov

3. Shenandoah Valley Electric Coop.
   Mr. Randy Glick
   147 Dinkel Avenue
   PO Box 236
   Mt. Crawford, VA 22841
   O: (540) 478-3040
   E: rglick@svec.coop

4. Verizon
   Mr. Mike Wallace
   404 Hillendale Lane
   Winchester, VA 22602
   O: (540) 665-3153
   E: michael.e.wallace@verizon.com

5. Comcast
   Ms. Amy Goad
   11800 Tech Road
   Silver Spring, MD 20904
   O: (301) 625-3407
   E: amy.goad@comcast.com

LEGEND

W
T/Tg Duct
SFM
G

NOTES:

(1) ALL TEST HOLES ARE REFERENCED FROM THE PROPOSED BASELINE UNLESS OTHERWISE NOTED.

(2) ELEVATIONS SHOWN HEREON ARE TO THE TOP OF THE FACILITY UNLESS OTHERWISE NOTED.

(3) YES OR NO: NO INDICATES NO DIRECT CONFLICT, HOWEVER, CLEARANCE MAY BE LESS THAN ACCEPTABLE TO UTILITY OWNER.

(4) REMARKS TO INCLUDE CLEARANCE DIMENSION (REGARDLESS OF DISTANCE).

(5) YES OR NO: INFORMATION TO BE PROVIDED BY RINKER DESIGN ASSOCIATES PROJECT UTILITY COORDINATOR.

Rinker Design Associates, P.C.
Civil Engineering • Surveying • Environmental
Transportation • Land Development • Right of Way Services
Office Locations
Winchester, VA 22601 — 400 Kent Street, Suite 100
Sterling, VA 20164 — 46790 Davis Drive, Suite 100
Leesburg, VA 20175 — 207 Plaza Drive, Suite 100

PROJECT MANAGER Perry Eisenach, P.E. - City of Winchester (540) 667-2085
SURVEYED BY, DATE Sidney Thomas, L.S. - Rinker Design Associates (703) 368-7373, October 2014
DESIGN BY John A. Glomett, P.E. - Rinker Design Associates (703) 334-0060
SUBSURFACE UTILITY BY, DATE Matthew Bansiem - Mid Atlantic Utility Locating (703) 378-0100, August 2014

Office Locations
Corporate Headquarters
8405 Greensboro Drive
Suite 800
McLean, VA 22102
Phone: (703) 334-0060
Fax: (703) 556-9282

207 Mapp Drive Bldg.
Suite 101
Fredericksburg, VA 22407
Phone: (540) 373-8210
Fax: (540) 373-8211

4011 Plaza Green Drive
Suite 105
Lexington, KY 40509
Phone: (859) 263-2663
Fax: (859) 263-2664

Rinker Design Associates, P.C.
Civil Engineering • Surveying • Environmental
Transportation • Land Planning
Right of Way Services

REVISED	STATE	STATE ROUTE	STATE PROJECT	SHEET NO.
	VA.	11	U000-138-R04 R201, C501	1E

DESIGN FEATURES RELATING TO CONSTRUCTION OR TO REGULATION AND CONTROL OF TRAFFIC MAY BE SUBJECT TO CHANGE AS DEEMED NECESSARY BY THE DEPARTMENT

Survey Control and Traverse Data

Rinker Design Associates, P.C. Horizontal Control Card

VALLEY AVENUE
Control Station I.D.: 8001
CITY OF WINCHESTER
Established By: RINKER DESIGN ASSOCIATES, P.C.
Vertical Datum Based On: NAVD 1988
Horizontal Datum Based On: NAD 1983
Survey By: ROBERT GRIM
Field Operator: TIM GRIFFITH

Control Data-Project Coordinates
East (X): 11,571,795.9539
North (Y): 7,104,434.2400
Elev. (Z): 759.74

** See Below for detailed sketch location

DETAILED SKETCH
(NOT TO SCALE)

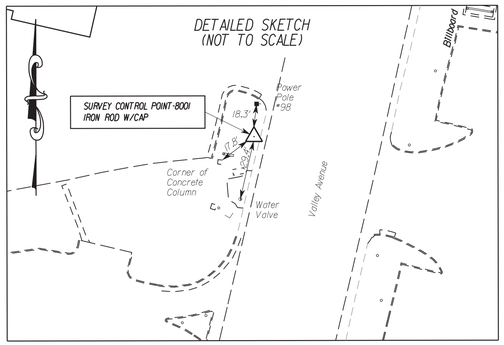

Rinker Design Associates, P.C. Horizontal Control Card

VALLEY AVENUE
Control Station I.D.: 8002
CITY OF WINCHESTER
Established By: RINKER DESIGN ASSOCIATES, P.C.
Vertical Datum Based On: NAVD 1988
Horizontal Datum Based On: NAD 1983
Survey By: ROBERT GRIM
Field Operator: TIM GRIFFITH

Control Data-Project Coordinates
East (X): 11,571,805.2032
North (Y): 7,104,561.454
Elev. (Z): 759.30

** See Below for detailed sketch location

DETAILED SKETCH
(NOT TO SCALE)

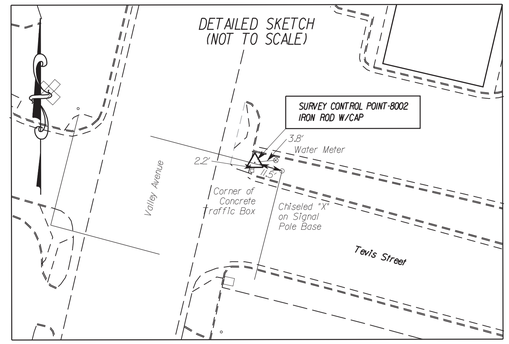

Rinker Design Associates, P.C. Horizontal Control Card

VALLEY AVENUE
Control Station I.D.: 8009
CITY OF WINCHESTER
Established By: RINKER DESIGN ASSOCIATES, P.C.
Vertical Datum Based On: NAVD 1988
Horizontal Datum Based On: NAD 1983
Survey By: ROBERT GRIM
Field Operator: TIM GRIFFITH

Control Data-Project Coordinates
East (X): 11,571,201.5801
North (Y): 7,101,818.4637
Elev. (Z): 774.70

** See Below for detailed sketch location

DETAILED SKETCH
(NOT TO SCALE)

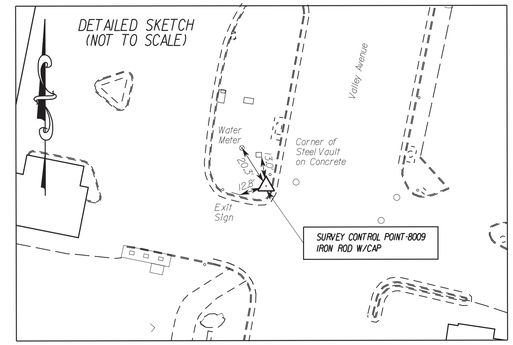

Rinker Design Associates, P.C. Horizontal Control Card

VALLEY AVENUE
Control Station I.D.: 8018
CITY OF WINCHESTER
Established By: RINKER DESIGN ASSOCIATES, P.C.
Vertical Datum Based On: NAVD 1988
Horizontal Datum Based On: NAD 1983
Survey By: ROBERT GRIM
Field Operator: TIM GRIFFITH

Control Data-Project Coordinates
East (X): 11,570,716.2777
North (Y): 7,098,478.4991
Elev. (Z): 746.19

** See Below for detailed sketch location

DETAILED SKETCH
(NOT TO SCALE)

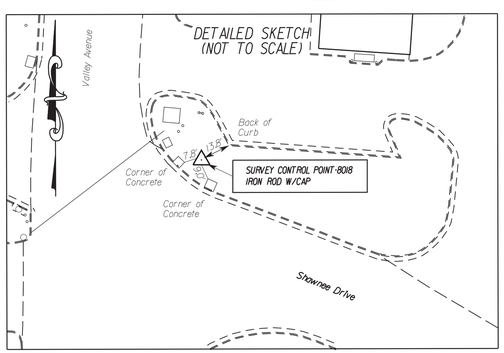

Rinker Design Associates, P.C. Horizontal Control Card

VALLEY AVENUE
Control Station I.D.: 8019
CITY OF WINCHESTER
Established By: RINKER DESIGN ASSOCIATES, P.C.
Vertical Datum Based On: NAVD 1988
Horizontal Datum Based On: NAD 1983
Survey By: ROBERT GRIM
Field Operator: TIM GRIFFITH

Control Data-Project Coordinates
East (X): 11,571,007.5704
North (Y): 7,098,248.6239
Elev. (Z): 747.21

** See Below for detailed sketch location

DETAILED SKETCH
(NOT TO SCALE)

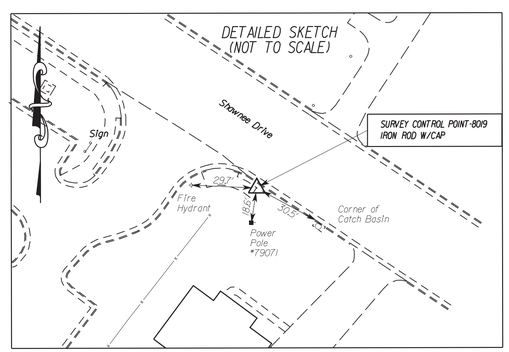

Rinker Design Associates, P.C. Horizontal Control Card

VALLEY AVENUE
Control Station I.D.: 8020
CITY OF WINCHESTER
Established By: RINKER DESIGN ASSOCIATES, P.C.
Vertical Datum Based On: NAVD 1988
Horizontal Datum Based On: NAD 1983
Survey By: ROBERT GRIM
Field Operator: TIM GRIFFITH

Control Data-Project Coordinates
East (X): 11,571,661.4545
North (Y): 7,101,576.7871
Elev. (Z): 763.31

** See Below for detailed sketch location

DETAILED SKETCH
(NOT TO SCALE)

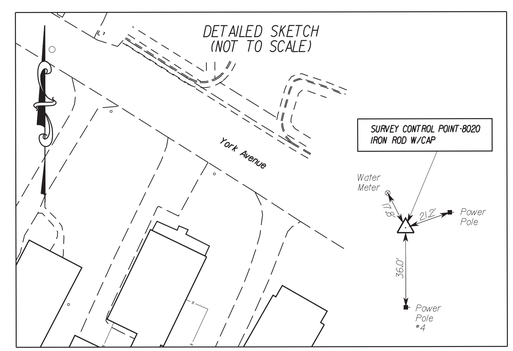

PROJECT MANAGER Perry Eisenach, P.E. - City of Winchester (540) 667-2085
SURVEYED BY, DATE Sidney Thomas, L.S. - Rinker Design Associates (703) 368-7373, October 2014
DESIGN BY John A. Glomett, P.E. - Rinker Design Associates (703) 334-0060
SUBSURFACE UTILITY BY, DATE Matthew Bansiem - Mid Atlantic Utility Locating (703) 378-0100, August 2014

REVISED	STATE	STATE ROUTE	STATE PROJECT	SHEET NO.
	VA.	11	U000-138-R04 R201,C501	1E(1)

DESIGN FEATURES RELATING TO CONSTRUCTION OR TO REGULATION AND CONTROL OF TRAFFIC MAY BE SUBJECT TO CHANGE AS DEEMED NECESSARY BY THE DEPARTMENT

Office Locations
Rinker Design Associates, P.C.
Civil Engineering • Surveying • Environmental
Transportation • Land Development
Right of Way Services
RINKER DESIGN ASSOCIATES, P.C.
4411 Plaza Green Drive
Suite 100
Lexington, KY 40509
Phone: (859) 263-2011
Fax: (859) 263-2444
4411 Harrison Boulevard
Suite 100
Knoxville, TN 37919
Phone: (865) 584-0483
Fax: (865) 584-0488
4411 Mayo Lake Drive
Suite 101
Chesterfield, VA 23832
Phone: (804) 768-7670
Fax: (804) 768-7671

Survey Control and Traverse Data

Rinker Design Associates, P.C. Horizontal Control Card

TEVIS STREET
Control Station I. D.: 23
CITY OF WINCHESTER
Established By: RINKER DESIGN ASSOCIATES, P.C.
Vertical Datum Based On: NAVD 1988
Horizontal Datum Based On: NAD 1983
Survey By: ROBERT GRIM
Field Operator: TIM GRIFFITH

Control Data-Project Coordinates
East (X): 11,573,144.8112
North (Y): 7,103,536.9843
East (Z): 741.20

** See Below for detailed sketch location

DETAILED SKETCH
(NOT TO SCALE)

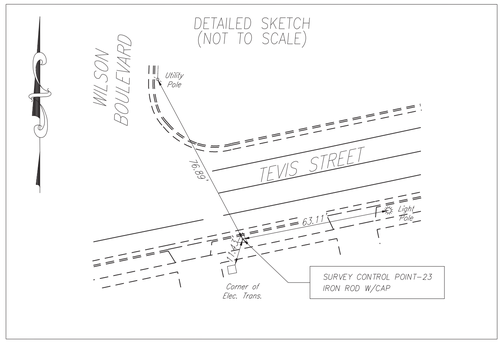

Rinker Design Associates, P.C. Horizontal Control Card

TEVIS STREET
Control Station I. D.: 24
CITY OF WINCHESTER
Established By: RINKER DESIGN ASSOCIATES, P.C.
Vertical Datum Based On: NAVD 1988
Horizontal Datum Based On: NAD 1983
Survey By: ROBERT GRIM
Field Operator: TIM GRIFFITH

Control Data-Project Coordinates
East (X): 11,572,742.2387
North (Y): 7,103,570.3394
East (Z): 743.09

** See Below for detailed sketch location

DETAILED SKETCH
(NOT TO SCALE)

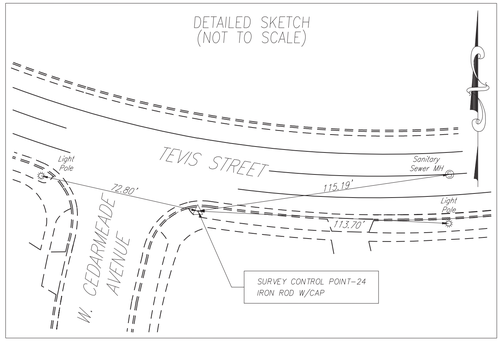

Rinker Design Associates, P.C. Horizontal Control Card

TEVIS STREET
Control Station I. D.: 25
CITY OF WINCHESTER
Established By: RINKER DESIGN ASSOCIATES, P.C.
Vertical Datum Based On: NAVD 1988
Horizontal Datum Based On: NAD 1983
Survey By: ROBERT GRIM
Field Operator: TIM GRIFFITH

Control Data-Project Coordinates
East (X): 11,572,238.4558
North (Y): 7,103,976.2200
East (Z): 754.25

** See Below for detailed sketch location

DETAILED SKETCH
(NOT TO SCALE)

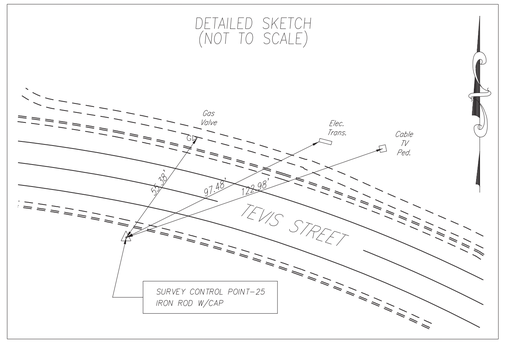

PROJECT MANAGER Perry Eisenach, P.E. - City of Winchester (540) 667-2085
SURVEYED BY, DATE Sidney Thomas, L.S. - Rinker Design Associates (703) 368-7373, October 2014
DESIGN BY John A. Giometti, P.E. - Rinker Design Associates (703) 334-0060
SUBSURFACE UTILITY BY, DATE Matthew Bansiem - Mid Atlantic Utility Locating (703) 378-0100, August 2014

Office Locations
Corporate Headquarters: 4670 Corporation Drive, Suite 100, Fairfax, VA 22030, Phone: (703) 334-0060, Fax: (703) 273-5656
Northern Virginia Office: 4661 Duke Street, Suite 100, Alexandria, VA 22304, Phone: (703) 370-9400, Fax: (703) 370-9401
Richmond Office: 4661 Parkway Boulevard, Suite 100, Chesterfield, VA 23832, Phone: (804) 748-8000, Fax: (804) 748-8001
Rinker Design Associates, P.C.
Civil Engineering • Surveying • Environmental
Transportation • Land Development • Right of Way Services

VALLEY AVENUE

<• 2 Describe Chain VALLEYCL

Chain VALLEYCL contains:

D400 CUR VALLEYCL-1 D401 CUR VALLEYCL-2 CUR VALLEYCL-3 D402 D403 D404 D405 D406 D407 D408 D409 D410 D411 D412 D413 D414

Beginning chain VALLEYCL description

****

Point D400 N 7,098,660.0699 E 11,570,680.9309 Sta 8+00.00

Course from D400 to PC VALLEYCL-1 N 12° 29' 25.84" E Dist 830.3098

Curve Data
•----------•

Curve VALLEYCL-1
P.I. Station 19+88.98 N 7,099,820.9098 E 11,570,938.0812
Delta = 4° 57' 58.65" (LT)
Degree = 0° 41' 33.91"
Tangent = 358.6710
Length = 716.8928
Radius = 8,270.7462
External = 7.7734
Long Chord = 716.6684
Mid.Ord. = 7.7662
P.C. Station 16+30.31 N 7,099,470.7278 E 11,570,860.5085
P.T. Station 23+47.20 N 7,100,176.4925 E 11,570,985.0474
C.C. N 7,101,259.5075 E 11,562,785.5156
Back = N 12° 29' 25.84" E
Ahead = N 7° 31' 27.19" E
Chord Bear = N 10° 00' 26.51" E

Course from PT VALLEYCL-1 to D401 N 7° 31' 27.19" E Dist 149.9784

Point D401 N 7,100,325.1795 E 11,571,004.6864 Sta 24+97.18

Course from D401 to PC VALLEYCL-2 N 6° 47' 00.81" E Dist 141.0854

Curve Data
•----------•

Curve VALLEYCL-2
P.I. Station 31+40.17 N 7,100,963.7761 E 11,571,079.7537
Delta = 3° 15' 54.74" (RT)
Degree = 0° 19' 31.32"
Tangent = 501.9083
Length = 1,003.5450
Radius = 17,609.5709
External = 7.1512
Long Chord = 1,003.4092
Mid.Ord. = 7.1483
P.C. Station 26+38.27 N 7,100,465.2773 E 11,571,021.3513
P.T. Station 36+41.81 N 7,101,458.1393 E 11,571,166.4548
C.C. N 7,098,416.2132 E 11,588,511.3005
Back = N 6° 40' 55.64" E
Ahead = N 9° 56' 50.38" E
Chord Bear = N 8° 18' 53.01" E

Course from PT VALLEYCL-2 to PC VALLEYCL-3 N 9° 21' 48.34" E Dist 295.8758

Curve Data
•----------•

Curve VALLEYCL-3
P.I. Station 40+30.49 N 7,101,841.2008 E 11,571,232.1571
Delta = 0° 36' 13.40" (RT)
Degree = 0° 19' 30.96"
Tangent = 92.8052
Length = 185.6087
Radius = 17,615.0709
External = 0.2445
Long Chord = 185.6079
Mid.Ord. = 0.2445
P.C. Station 39+37.69 N 7,101,750.0729 E 11,571,214.5926
P.T. Station 41+23.30 N 7,101,932.1386 E 11,571,250.6808
C.C. N 7,098,416.2132 E 11,588,511.3005
Back = N 10° 54' 34.94" E
Ahead = N 11° 30' 48.34" E
Chord Bear = N 11° 12' 41.64" E

Course from PT VALLEYCL-3 to D402 N 12° 55' 54.28" E Dist 302.6718

Point D402 N 7,102,227.1338 E 11,571,318.4158 Sta 44+25.97

Course from D402 to D403 N 13° 35' 33.60" E Dist 138.2498

Point D403 N 7,102,361.5114 E 11,571,350.9069 Sta 45+64.22

Course from D403 to D404 N 12° 53' 20.97" E Dist 425.7423

Point D404 N 7,102,776.5265 E 11,571,445.8754 Sta 49+89.96

Course from D404 to D405 N 11° 10' 12.10" E Dist 50.0000

Point D405 N 7,102,825.5793 E 11,571,455.5615 Sta 50+39.96

Course from D405 to D406 N 12° 53' 20.97" E Dist 353.4315

Point D406 N 7,103,170.1055 E 11,571,534.3999 Sta 53+93.39

Course from D406 to D407 N 12° 27' 52.07" E Dist 199.8836

Point D407 N 7,103,365.2779 E 11,571,577.5416 Sta 55+93.28

Course from D407 to D408 N 13° 19' 39.63" E Dist 366.4747

Point D408 N 7,103,721.8826 E 11,571,662.0213 Sta 59+59.75

Course from D408 to D409 N 12° 24' 38.31" E Dist 249.9291

Point D409 N 7,103,965.9715 E 11,571,715.7352 Sta 62+09.68

Course from D409 to D410 N 13° 19' 39.63" E Dist 504.4923

Point D410 N 7,104,456.8766 E 11,571,832.0307 Sta 67+14.17

Course from D410 to D411 N 11° 10' 35.81" E Dist 119.9986

Point D411 N 7,104,574.5994 E 11,571,855.2905 Sta 68+34.17

Course from D411 to D412 N 13° 19' 39.63" E Dist 572.8278

Point D412 N 7,105,131.9996 E 11,571,987.3386 Sta 74+07.00

Course from D412 to D413 N 14° 00' 04.95" E Dist 59.2779

Point D413 N 7,105,189.5163 E 11,572,001.6806 Sta 74+66.28

Course from D413 to D414 N 12° 59' 19.27" E Dist 833.7271

Point D414 N 7,106,001.9120 E 11,572,189.0680 Sta 83+00.00

****

Ending chain VALLEYCL description

TEVIS STREET

From Sta. 500+00.00 to 520+66.90
Beginning chain TEVIS2 description

****

Point T101 N 7,104,142.1602 E 11,571,757.4743 Sta 500+00.00

Course from T101 to T102 S 74° 37' 36.21" E Dist 419.3883

Point T102 N 7,104,030.9776 E 11,572,161.8566 Sta 504+19.39

Curve Data
•----------•

Curve TEVIS-C3
P.I. Station 506+44.66 N 7,103,971.2567 E 11,572,379.0679
Delta = 39° 42' 47.56" (RT)
Degree = 9° 11' 06.81"
Tangent = 225.2717
Length = 432.3597
Radius = 623.7820
External = 39.4309
Long Chord = 423.7567
Mid.Ord. = 37.0866
P.C. Station 504+19.39 N 7,104,030.9776 E 11,572,161.8566
P.T. Station 508+51.75 N 7,103,786.5300 E 11,572,507.9998
C.C. N 7,103,429.5151 E 11,571,996.4880
Back = S 74° 37' 36.20" E
Ahead = S 34° 54' 48.64" E
Chord Bear = S 54° 46' 12.42" E

Course from PT TEVIS-C3 to T104 S 34° 54' 48.64" E Dist 26.8173

Point T104 N 7,103,764.5394 E 11,572,523.3484 Sta 508+78.57

Curve Data
•----------•

Curve TEVIS-C4
P.I. Station 511+30.46 N 7,103,557.9826 E 11,572,667.5168
Delta = 55° 11' 55.03" (LT)
Degree = 11° 53' 27.61"
Tangent = 251.8933
Length = 464.2050
Radius = 481.8415
External = 61.8693
Long Chord = 446.4602
Mid.Ord. = 54.8292
P.C. Station 508+78.57 N 7,103,764.5394 E 11,572,523.3484
P.T. Station 513+42.77 N 7,103,558.4756 E 11,572,919.4095
C.C. N 7,104,040.3161 E 11,572,918.4666
Back = S 34° 54' 48.63" E
Ahead = N 89° 53' 16.34" E
Chord Bear = S 62° 30' 46.15" E

Course from PT TEVIS-C4 to T106 N 89° 53' 16.34" E Dist 607.9596

Point T106 N 7,103,559.6653 E 11,573,527.3680 Sta 519+50.73

Curve Data
•----------•

Curve TEVIS-C5
P.I. Station 520+09.35 N 7,103,559.7801 E 11,573,585.9916
Delta = 19° 01' 01.66" (RT)
Degree = 16° 22' 12.80"
Tangent = 58.6237
Length = 116.1690
Radius = 350.0000
External = 4.8757
Long Chord = 115.6365
Mid.Ord. = 4.8087
P.C. Station 519+50.73 N 7,103,559.6653 E 11,573,527.3680
P.T. Station 520+66.90 N 7,103,540.7860 E 11,573,641.4530
C.C. N 7,103,209.6660 E 11,573,528.0530
Back = N 89° 53' 16.34" E
Ahead = S 71° 05' 42.00" E
Chord Bear = S 80° 36' 12.83" E

****

Ending chain TEVIS2 description

COMMONWEALTH OF VIRGINIA
JOHN A. GIOMETTI
Lic. No. 032300
PROFESSIONAL ENGINEER

John A Giometti
2020.02.14 16:21:19-05'00'

Rinker Design Assoc., P.C.
Fredericksburg, Virginia
ROADWAY ENGINEER

REVISED	STATE	STATE ROUTE	STATE PROJECT	SHEET NO.
	VA.	11	U000-138-R04 C501	1F

DESIGN FEATURES RELATING TO CONSTRUCTION OR TO REGULATION AND CONTROL OF TRAFFIC MAY BE SUBJECT TO CHANGE AS DEEMED NECESSARY BY THE DEPARTMENT

PROJECT	SHEET NO.
U000-138-R04	1F

Rinker Design Associates, P.C.
Civil Engineering - Surveying - Land Planning
Transportation - Environmental
Right of Way Services
www.RDAcivil.com

Office Locations
9385 Discovery Boulevard, Suite 200, Manassas, VA 20109, Phone: (703) 368-7373, Fax: (703) 257-5443
4901 Dominion Boulevard, Suite 100, Glen Allen, VA 23060, Phone: (804) 612-0665, Fax: (804) 612-0668
927 Maple Grove Drive, Suite 105, Fredericksburg, VA 22407, Phone: (540) 548-4470, Fax: (540) 548-4471

PROJECT MANAGER Perry Eisenach,P.E.- City of Winchester (540) 667-2085
SURVEYED BY, DATE Sidney Thomas,L.S.- Rinker Design Associates (703) 368-7373,October 2014
DESIGN BY John A.Giometti,P.E.- Rinker Design Associates (703) 334-0060
SUBSURFACE UTILITY BY, DATE Matthew Ranslem - Mid Atlantic Utility Locating (703) 378-0100,August 2014

TRANSPORTATION MANAGEMENT PLAN

COMMONWEALTH OF VIRGINIA
JOHN A. GIOMETTI
Lic. No. 032300
PROFESSIONAL ENGINEER

John A Giometti
2020.02.14 16:52:47-05'00'

Rinker Design Assoc., P.C.
Fredericksburg, Virginia
ROADWAY ENGINEER

REVISED	STATE	STATE ROUTE	STATE PROJECT	SHEET NO.
	VA.	11	U000-138-R04 C501	1J

DESIGN FEATURES RELATING TO CONSTRUCTION OR TO REGULATION AND CONTROL OF TRAFFIC MAY BE SUBJECT TO CHANGE AS DEEMED NECESSARY BY THE DEPARTMENT

Temporary Traffic Control Plan

General Notes:

1 Transportation Management Plan/Sequence of Construction Type B Project Information:

a Identify the project's TMP Type:
This project's TMP/SOC has been designed in conformance with a Type B,Category III TMP/SOC.

b Identify the work zone location,length,and widths:
The project location is as shown on Sheet 1A.The work zone areas have been delineated as shown on the TMP/SOC Sheet 1J series.The work zone lengths and widths vary by location as shown in these plans.

c Note the hours the Construction Area will be active:
Construction Area shall be considered active when any impact to traffic occurs (1st Cone in Road).
Construction Area hours have the following limitations:

The work must follow the Code of Ordinances City of Winchester,Virginia - Chapter 17,Noise Control

d The TMP/SOC,during construction,shall be in accordance with the project's Technical Specifications, Virginia Department of Transportation Road and Bridge Specifications,dated 2016;the 2011 Virginia Work Area Protection Manual;the Manual on Uniform Traffic Control Devices (MUTCD),2009 Edition;and the Virginia Supplement to the MUTCD,dated 2011.

e Note any existing entrances,existing intersections,or existing pedestrian access points that will be affected by the Construction Area or by the traffic control devices:

Existing Entrances:
All existing commercial or private entrances shall remain open for the duration of construction.The Contractor shall ensure that all entrance accessibility is maintained during construction.

Existing Intersections:
There are multiple intersections within the project limits.These intersections shall remain operational for the duration of the project.

Existing Pedestrian Access Points:
There are multiple crosswalks throughout the project.These crosswalks are to be maintained throughout construction.The contractor shall ensure safe access to pedestrians.

Existing Bus Stops:
Bus stops within the project limits shall be maintained throughout construction.

f Identify the major types of travelers:
The roadway carries diverse types of travelers.In the peak hours however,daily commuters are the prevailing traveler type for this roadway.

g The Contractor,at no additional cost to the project and which shall be considered incidental to the cost of the project,shall:

Designate a person assigned to the project who will have the primary responsibility,with sufficient authority,for implementing the TMP/SOC and other safety and mobility aspects of the permit work. This person shall be designated the "Project Safety Officer."

Ensure that personnel assigned to the project are trained in traffic control to a level commensurate with their responsibilities in accordance with VDOT's work zone traffic control training guidelines.

Inform the VDOT,City of Winchester,and/or the Engineer of any work requiring lane shifts, lane closures,and/or phase changes a minimum of one week prior to implementing this activity. The City of Winchester may use various media publications to announce changes in traffic conditions for which the Contractor shall provide information as needed at no additional cost to the project.

Perform reviews of the Construction Area to ensure compliance with contract documents at regularly scheduled intervals at the direction of the Engineer.Contractor shall maintain a copy of the temporary traffic control plan at the work site at all times.

Coordinate with the Winchester Police Department,Winchester Fire/Rescue Department,and Virginia State Police for any lane closures and any detours of any nature at no additional cost to the project.

Notify the Regional Transportation Operations Center (TOC) 48 hours in advance in order to place lane closure information on the 511 System and VA-Traffic.

Schedule all phases of construction in such a manner that water,sanitary sewer,cable,fiber cable/optic cable,any overhanging utilities,and any underground utilities services will not be interrupted.

h During working hours,all construction equipment is to stay outside of the construction area clear zone as designated in the VWAPM,Appendix A.Construction equipment (including temporary concrete traffic barrier service) is not to block or obstruct sight distance at any intersection or private entrance along the project when the construction work zone is active.

2 This TMP/SOC plan is intended as a guide.It is not to enumerate every detail which must be considered in the construction of each phase,but only to show the general handling of existing traffic.The distance requirements for the advance warning signs,the contractor may modify the TTC examples in the Virginia Work Area Protection Manual only slightly.Any significant deviation will require a signed and sealed plan to be submitted for approval PRIOR to work at the proposed location.

3 Contractor is to maintain two lanes of traffic (one in each direction) on Valley Avenue during construction of this project,unless otherwise approved by the Engineer.For street intersections, commercial connections,or private entrances,a minimum width no less than existing width shall be maintained at all times unless otherwise approved by the Engineer.When construction zone is not active,the Contractor shall ensure all street connections/entrances maintain a minimum of two lanes of traffic (one in each direction).During construction of adjacent entrances,Contractor to sequence construction to maintain access at all times and entrance work to occur during non-business hours to commercial entrances and coordinate with Owner to minimize disruptions to residential entrances.

4 Contractor is to sequence construction to a maximum one-quarter mile of work zone that requires a lane closure to minimize traffic impacts along this corridor.

5 Contractor shall follow the geotechnical recommendations for the project.Materials designated as unsuitable material as detailed in the geotechnical recommendations shall be disposed of offsite and are not to be used for any part of construction.

6 Existing surface,aggregate base,and sub base material which will be demolished or obliterated during construction,and which are suitable for maintenance of traffic,should be utilized prior to the use of commercial material.

7 Each phase of construction shall be completed to the installation of intermediate course asphalt prior to the start of the next phase unless otherwise directed by the Engineer.

8 Contractor shall ensure positive drainage for the duration of the project.Contractor shall add any additional temporary measures necessary to facilitate proper,positive drainage for the duration of construction at no additional cost to the project.

9 Unless specified on the plans,all existing turn lanes shall be maintained at all times for the duration of construction.

10 Where Group 2 Channelizing Devices are used to separate the Construction Area and traffic,a minimum clear zone area as defined in the VWAPM,Appendix A is to be maintained.

11 The Contractor is to coordinate with the City of Winchester for location(s) of the construction staging area(s).Contractor shall obtain all necessary permits and easements for the construction staging area and/or office to be located onsite within the project limits.The Contractor is responsible for these costs (permits,easements),and they shall be incidental to the project and not paid for as a separate item.

12 All areas excavated below the existing pavement surface and within the clear zone at the conclusion of each workday,shall be backfilled to form an approximate 6:1 wedge against the existing pavement or newly constructed pavement surface for the safety and protection of vehicular traffic.All costs for placing, maintaining,and removing 6:1 wedge shall be included in the price bid for other items in the contract and no additional compensation shall be allowed.

13 IMPLEMENTING THE TRANSPORTATION MANAGEMENT PLAN
During the first day of the new work zone traffic pattern,the project's Manager and project's Maintenance of Traffic Coordinator shall inspect the work zone to ensure compliance with the TMP.On the third to fifth day of implementation of the TMP's new work zone traffic pattern,the District Work Zone Safety Coordinator and the project's Maintenance of Traffic Coordinator shall conduct an on-site review of the work zone's performance and recommend to the Contractor any required changes to the TMP to enhance the work zone's safety and mobility.All such changes shall be documented.An on-site review of the project's work zone traffic control by the District & City of Winchester Work Zone Safety Coordinator,project's Manager/Maintenance of Traffic Coordinator,District & City of Winchester Safety Engineer,and the Contractor shall be conducted within 48 hours of any fatal incident/crash within the work zone.

14 EVALUATION OF THE TRANSPORTATION MANAGEMENT PLAN
A performance assessment of the TMP including area-wide impacts on adjacent roadways shall be performed by the Regional Traffic Engineering and Operations sections during construction.As circumstances dictate,a review of the overall effectiveness of the project's TMP shall be completed during the Post-Construction Meeting and included with the Post-Construction Report.A copy of the specific information on the effectiveness of the TMP will be forwarded to the State Traffic Engineer & City of Winchester for review.A copy of the TMP Interim/Post-Construction Report Form can be obtained from the Regional Traffic Engineer & City of Winchester Traffic Engineer.

15 PUBLIC COMMUNICATIONS PLAN
The Contractor shall be responsible for:

a Notifying the Project Manager/Residency Administrator & City of Winchester Project Manager two weeks in advance of any scheduled work plans and traffic delays.

b Notifying the Project Manager/Residency Administrator,Regional Operations Manager,the Public Affairs Staff,and the City of Winchester Project Manager of any unscheduled traffic delays.

15 TRANSPORTATION OPERATIONS
The Contractor shall be responsible for implementing and providing the following:

a Notify the Regional Transportation Operations Center (TOC) 48 hours in advance in order to place lane closure information on the 511 system and VA-Traffic.

b Post a list of local emergency response agencies inside the project's construction office/trailer.

c Immediately report any traffic incidents that may occur in the work zone.

d Notify the City of Winchester Project Manager,the project's Maintenance of Traffic Coordinator,Project Manager,Resident Administrator,District Work Zone Safety Coordinator,District Traffic Engineer,the Regional Operations Manager,and Public Affairs Manager of any incidents and expected traffic delays.

e Within 24 hours of any incidents within the construction work zone,a review of the traffic controls shall be completed and necessary adjustments made to reduce the frequency and severity of any future incidents.

16 Note the Lump Sum quantity for "MAINTENANCE OF TRAFFIC" includes TEMPORARY TRAFFIC CONTROL SIGNAL,which includes the following:

a All labor and materials required for all equipment/infrastructure changes to signalizations for all phases (and changes in lane configurations at intersection) of construction,for the duration of the entire project, for each signal.

b Maintaining power service and phone connection(s) to all temporary traffic signalization for the duration of construction.

c Providing temporary signal plans to VDOT & the City of Winchester (for approval) prior to the start of construction activity for each temporary signal configuration to be utilized for each signal for the life of the project.

d Maintaining vehicle detection on all approaches at all times by means approved by VDOT & the City of Winchester.

e Submitting temporary signal timings to VDOT & the City of Winchester for approval to be implemented.

f Maintaining qualified crew on-call 24 hours a day,to maintain all signals for the life of construction.

TMP/SOC Designer:
Matthew A.Beales
Advance Work Zone Traffic Contol Training,VDOT Certificate No.020218770,Expires 2-28-2022

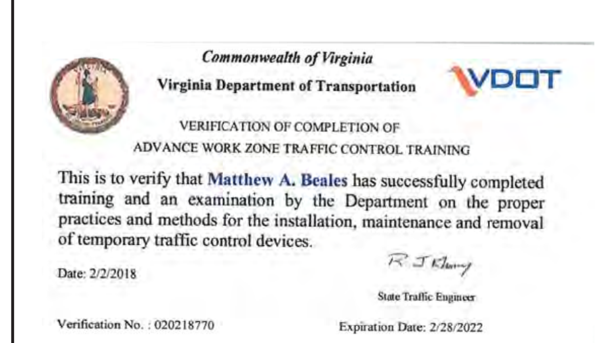
Commonwealth of Virginia
Virginia Department of Transportation
VDOT
VERIFICATION OF COMPLETION OF
ADVANCE WORK ZONE TRAFFIC CONTROL TRAINING
This is to verify that Matthew A. Beales has successfully completed training and an examination by the Department on the proper practices and methods for the installation, maintenance and removal of temporary traffic control devices.
Date: 2/2/2018
State Traffic Engineer
Verification No. : 020218770
Expiration Date: 2/28/2022

PROJECT MANAGER Perry Eisenach, P.E. - City of Winchester (540) 667-2085
SURVEYED BY, DATE Sidney Thomas, L.S. - Rinker Design Associates (703) 368-7373, October 2014
DESIGN BY John A. Giometti, P.E. - Rinker Design Associates (703) 334-0060
SUBSURFACE UTILITY BY, DATE Matthew Bansiem - Mid Atlantic Utility Locating (703) 378-0100, August 2014

Office Locations
Headquarters: 10605 Concord Street, Suite 100, Kensington, MD 20895, Phone: (301) 933-1720, Fax: (301) 933-1641
207 Mill Ridge Road, Suite 101, Fredericksburg, VA 22406, Phone: (540) 373-4646, Fax: (540) 373-4647
207 Parkway Boulevard, Suite 110, Staunton, VA 24401, Phone: (540) 885-5991, Fax: (540) 885-5992
4101 Chamberlayne Avenue, Suite 100, Richmond, VA 23227, Phone: (804) 355-1460, Fax: (804) 355-1464
Rinker Design Associates, P.C.
Civil Engineering • Surveying • Land Planning
Transportation • Environmental
Right of Way Services
SINCE ESTABLISHED IN M.D.V.D.

SEQUENCE OF CONSTRUCTION

COMMONWEALTH OF VIRGINIA
JOHN A. GIOMETTI
Lic. No. 032300
PROFESSIONAL ENGINEER

John A Giometti
2020.02.14 16:52:31-05'00'

Rinker Design Assoc., P.C.
Fredericksburg, Virginia
ROADWAY ENGINEER

REVISED	STATE	STATE ROUTE	STATE PROJECT	SHEET NO.
	VA.	11	U000-138-R04 R201,C501	IJ(1)

DESIGN FEATURES RELATING TO CONSTRUCTION OR TO REGULATION AND CONTROL OF TRAFFIC MAY BE SUBJECT TO CHANGE AS DEEMED NECESSARY BY THE DEPARTMENT

TRAFFIC CONTROL PLAN - PHASE 1

WORK ZONE ACTIVITIES

1. PRIOR TO INITIATING ANY WORK, INSTALL THE ADVANCE PROJECT LIMITS SIGNS (ROAD WORK AHEAD & END ROAD WORK) (TTC-53.0) PER THE TRAFFIC CONTROL PLAN (TCP).
2. CONTRACTOR TO UTILIZE THE VIRGINIA WORK AREA PROTECTION MANUAL (VWAPM) TTC-4.1, AS APPROPRIATE, TO SET UP TEMPORARY SHOULDER CLOSURES ALONG NORTHBOUND VALLEY AVENUE IN ORDER TO CONSTRUCT THE PAVEMENT WIDENING, SIDEWALK AND ASSOCIATED GRADING.
3. CONTRACTOR TO UTILIZE TTC 5.2 AND 16.2, AS APPROPRIATE, IN ORDER TO TIE PAVEMENT WIDENING TO EXISTING PAVEMENT.
4. CONTRACTOR TO UTILIZE TTC 16.2, 17.2, 21.1, AND 42.2, OR A COMBINATION THERE OF, DURING NON-PEAK HOURS FOR THE CONSTRUCTION OF STORM SEWER, WATER, AND SANITARY SEWER ALONG NORTHBOUND VALLEY AVENUE.
5. WHEN EXISTING PAVEMENT MARKINGS ARE IMPACTED BY CONSTRUCTION, CONFLICTING PAVEMENT MARKINGS SHALL BE ERADICATED AND TEMPORARY PAVEMENT MARKINGS (TYPE D, CLASS III) SHALL BE INSTALLED IN THE NECESSARY LOCATIONS.
6. CONTRACTOR TO SEQUENCE CONSTRUCTION TO AVOID ACTIVE WORK ZONES SIMULTANEOUSLY OCCURING ON LEFT AND RIGHT SIDE OF TRAFFIC.
7. THE CLOSURE/DETOUR OF EXISTING SIDEWALKS TO UTILIZE TTC-35.1.

CONSTRUCTION ZONE ACTIVITIES:

1. ACTIVATE PHASE 1 TEMPORARY SIGNAL MODIFICATIONS, IF NECESSARY, AT THE INTERSECTIONS.
2. INSTALL GROUP 2 CHANNELIZING DEVICES AND APPROPRIATE SIGNAGE ALONG VALLEY AVENUE.
3. INSTALL EROSION & SEDIMENT CONTROL MEASURES, AS NECESSARY.
4. INSTALL PERMANENT PAVEMENT (LESS SURFACE COURSE) WIDENING, CURB AND GUTTER, STORM SEWER, WATER AND SANITARY SEWER, AS APPROPRIATE, UTILIZING SHOULDER CLOSURES (TTC 4.2 AND 5.2) AND TEMPORARY LANE CLOSURES (TTC 16.2, 17.2, 21.1 AND 42.2 OR A COMBINATION THEREOF) WHERE NECESSARY.
5. INSTALL TEMPORARY PAVEMENT MARKINGS, AS NECESSARY.

TRAFFIC CONTROL PLAN - PHASE 2

WORK ZONE ACTIVITIES

1. MAINTAIN THE ADVANCE PROJECT LIMITS SIGNS (ROAD WORK AHEAD & END ROAD WORK) (TTC-53.0) PER THE TRAFFIC CONTROL PLAN (TCP).
2. CONTRACTOR TO UTILIZE THE VIRGINIA WORK AREA PROTECTION MANUAL (VWAPM) TTC-4.2, AS APPROPRIATE, TO SET UP TEMPORARY SHOULDER CLOSURES ALONG SOUTHBOUND VALLEY AVENUE IN ORDER TO CONSTRUCT THE PAVEMENT WIDENING, SIDEWALK AND ASSOCIATED GRADING.
3. CONTRACTOR TO UTILIZE TTC 5.2 AND 16.2, AS APPROPRIATE, IN ORDER TO TIE PAVEMENT WIDENING TO EXISTING PAVEMENT.
4. CONTRACTOR TO UTILIZE TTC 16.2, 17.2, 21.1, AND 42.2, OR A COMBINATION THERE OF, DURING NON-PEAK HOURS FOR THE CONSTRUCTION OF STORM SEWER, WATER, AND SANITARY SEWER ALONG SOUTHBOUND VALLEY AVENUE.
5. WHEN EXISTING PAVEMENT MARKINGS ARE IMPACTED BY CONSTRUCTION, CONFLICTING PAVEMENT MARKINGS SHALL BE ERADICATED AND TEMPORARY PAVEMENT MARKINGS (TYPE D, CLASS I/III) SHALL BE INSTALLED IN THE NECESSARY LOCATIONS.
6. CONTRACTOR TO SEQUENCE CONSTRUCTION TO AVOID ACTIVE WORK ZONES SIMULTANEOUSLY OCCURING ON LEFT AND RIGHT SIDE OF TRAFFIC.
7. THE CLOSURE/DETOUR OF EXISTING SIDEWALKS TO UTILIZE TTC-35.1.

CONSTRUCTION ZONE ACTIVITIES:

1. ACTIVATE PHASE 1 TEMPORARY SIGNAL MODIFICATIONS, IF NECESSARY, AT THE INTERSECTIONS.
2. INSTALL GROUP 2 CHANNELIZING DEVICES AND APPROPRIATE SIGNAGE ALONG VALLEY AVENUE.
3. INSTALL EROSION & SEDIMENT CONTROL MEASURES, AS NECESSARY.
4. INSTALL PERMANENT PAVEMENT (LESS SURFACE COURSE) WIDENING, CURB AND GUTTER, STORM SEWER, WATER AND SANITARY SEWER, AS APPROPRIATE, UTILIZING SHOULDER CLOSURES (TTC 4.2 AND 5.2) AND TEMPORARY LANE CLOSURES (TTC 16.2, 17.2, 21.1 AND 42.2 OR A COMBINATION THEREOF) WHERE NECESSARY.
5. INSTALL TEMPORARY PAVEMENT MARKINGS, AS NECESSARY.

TRAFFIC CONTROL PLAN - PHASE 3 (NO GRAPHICAL PLANS)

WORK ZONE ACTIVITIES

1. MAINTAIN ADVANCE PROJECT LIMIT SIGNS (ROAD WORK AHEAD & END ROAD WORK).
2. CONTRACTOR TO SETUP USING THE VIRGINIA WORK AREA PROTECTION MANUAL (VWAPM) TEMPORARY TRAFFIC CONTROL (TTC) TYPICAL APPLICATIONS AS APPROPRIATE DURING EACH WORK PERIOD. CONTRACTOR TO UTILIZE TTC 16.2, 17.2 AND 42.2 DURING M&O OPERATIONS ALONG VALLEY AVENUE. LANE CLOSURES ONLY ALLOWED DURING ACTIVE WORK ZONES.
3. WHEN EXISTING PAVEMENT MARKINGS ARE IMPACTED BY THE MILLING OPERATION, CONFLICTING PAVEMENT MARKINGS SHALL BE ERADICATED AND TEMPORARY PAVEMENT MARKINGS (TYPE D, CLASS III) SHALL BE INSTALLED IN THE NECESSARY LOCATIONS.
4. THROUGHOUT THE MILLING & OVERLAY OPERATION, 6:1 WEDGE DROP-OFF CONDITIONS SHALL COMPLY.
5. CONTRACTOR TO SEQUENCE CONSTRUCTION TO AVOID ACTIVE WORK ZONES SIMULTANEOUSLY OCCURING ON LEFT AND RIGHT SIDE OF TRAFFIC.

CONSTRUCTION ZONE ACTIVITIES:

1. INSTALL GROUP 2 CHANNELIZING DEVICES AND APPROPRIATE SIGNAGE ALONG VALLEY AVENUE.
2. INSTALL EROSION & SEDIMENT CONTROL MEASURES, AS NECESSARY.
3. COMPLETE FINAL PAVEMENT SURFACE THROUGH THE LENGTH OF THE PROJECT.
4. COMPLETE FINAL SIGNALS AT THE INTERSECTIONS. INSTALL PERMANENT SIGNAGE AND PERMANENT PAVEMENT MARKINGS.

PROJECT MANAGER Perry Eisenach, P.E. - City of Winchester (540) 667-2085
SURVEYED BY, DATE Sidney Thomas, L.S. - Rinker Design Associates (703) 368-7373, October 2014
DESIGN BY John A. Giometti, P.E. - Rinker Design Associates (703) 334-0060
SUBSURFACE UTILITY BY, DATE Matthew Bansiem - Mid Atlantic Utility Locating (703) 378-0100, August 2014

Temporary Traffic Control Typical Sections

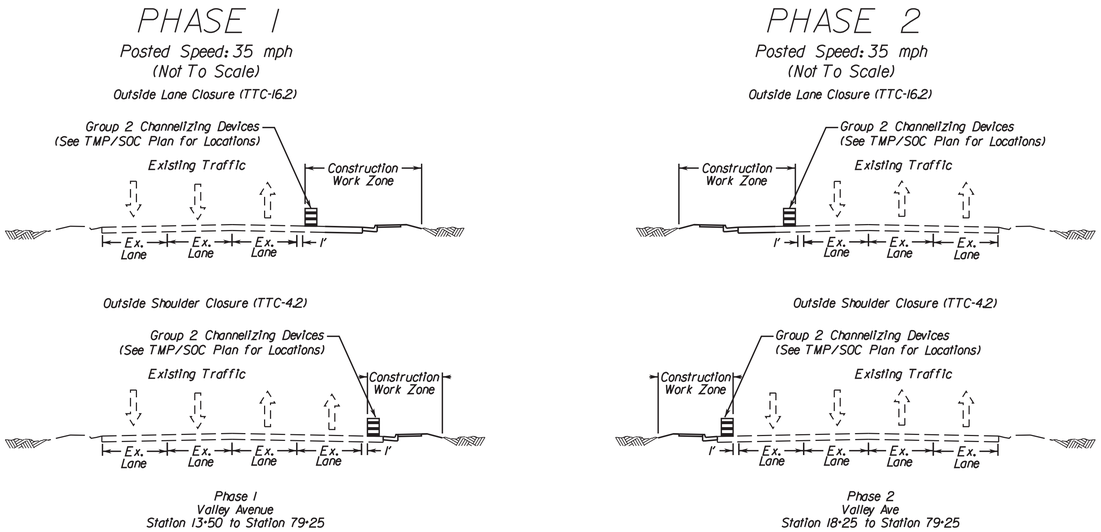

Phase 1
Valley Avenue
Station 13+50 to Station 79+25

Phase 2
Valley Ave
Station 18+25 to Station 79+25

COMMONWEALTH OF VIRGINIA
JOHN A. GIOMETTI
Lic. No. 032300
PROFESSIONAL ENGINEER

John A Giometti
2020.02.14 16:52:09-05'00'

Rinker Design Assoc., P.C.
Fredericksburg, Virginia
ROADWAY ENGINEER

REVISED	STATE	STATE ROUTE	STATE PROJECT	SHEET NO.
	VA.	11	U000-138-R04 R201,C501	1J(1)

DESIGN FEATURES RELATING TO CONSTRUCTION OR TO REGULATION AND CONTROL OF TRAFFIC MAY BE SUBJECT TO CHANGE AS DEEMED NECESSARY BY THE DEPARTMENT

Rinker Design Associates, P.C.
Civil Engineering • Surveying • Environmental
Transportation • Land Development
Right of Way Services
Office Locations
Fredericksburg, Virginia
401 Lafayette Street
Suite 100
Fredericksburg, VA 22401
Phone: (540) 373-3000
Fax: (540) 373-3047
Winchester, Virginia
107 Kent Street
Suite 100
Winchester, VA 22601
Phone: (540) 662-4085
Fax: (540) 662-4086
Manassas, Virginia
9101 Mathis Avenue Drive
Suite 100
Manassas, VA 20110
Phone: (703) 334-0060
Fax: (540) 373-3047

PROJECT	SHEET NO.
U000-138-R04	1J(1)

PROJECT MANAGER Perry Eisenach, P.E. - City of Winchester (540) 667-2085
SURVEYED BY, DATE Sidney Thomas, L.S. - Rinker Design Associates (703) 368-7373, October 2014
DESIGN BY John A. Giometti, P.E. - Rinker Design Associates (703) 334-0060
SUBSURFACE UTILITY BY, DATE Matthew Bansiem - Mid Atlantic Utility Locating (703) 378-0100, August 2014

Rinker Design Associates, P.C.
Civil Engineering • Surveying • Environmental
Transportation • Land Development • Right of Way Services
SHOTTON VILLE, VA.
Office Locations
Corporate Headquarters
10432 Balls Ford Road
Suite 300
Manassas, VA 20109
Phone: (703) 334-0060
Fax: (703) 335-0369
4411 Plank Lane Drive
Suite 100
Fredericksburg, VA 22407
Phone: (540) 785-8110
Fax: (540) 785-8117
4101 Dominion Boulevard
Suite 100
Glen Allen, VA 23060
Phone: (804) 262-8001
Fax: (804) 262-8008

PHASE I TMP/SOC

COMMONWEALTH OF VIRGINIA
JOHN A. GIOMETTI
Lic. No. 032300
PROFESSIONAL ENGINEER

John A Giometti
2020.02.14 16:51:46-05'00'

Rinker Design Assoc., P.C.
Fredericksburg, Virginia
ROADWAY ENGINEER

REVISED	STATE	STATE ROUTE	STATE PROJECT	SHEET NO.
	VA.	II	U000-138-R04 R201,C501	IK

DESIGN FEATURES RELATING TO CONSTRUCTION OR TO REGULATION AND CONTROL OF TRAFFIC MAY BE SUBJECT TO CHANGE AS DEEMED NECESSARY BY THE DEPARTMENT

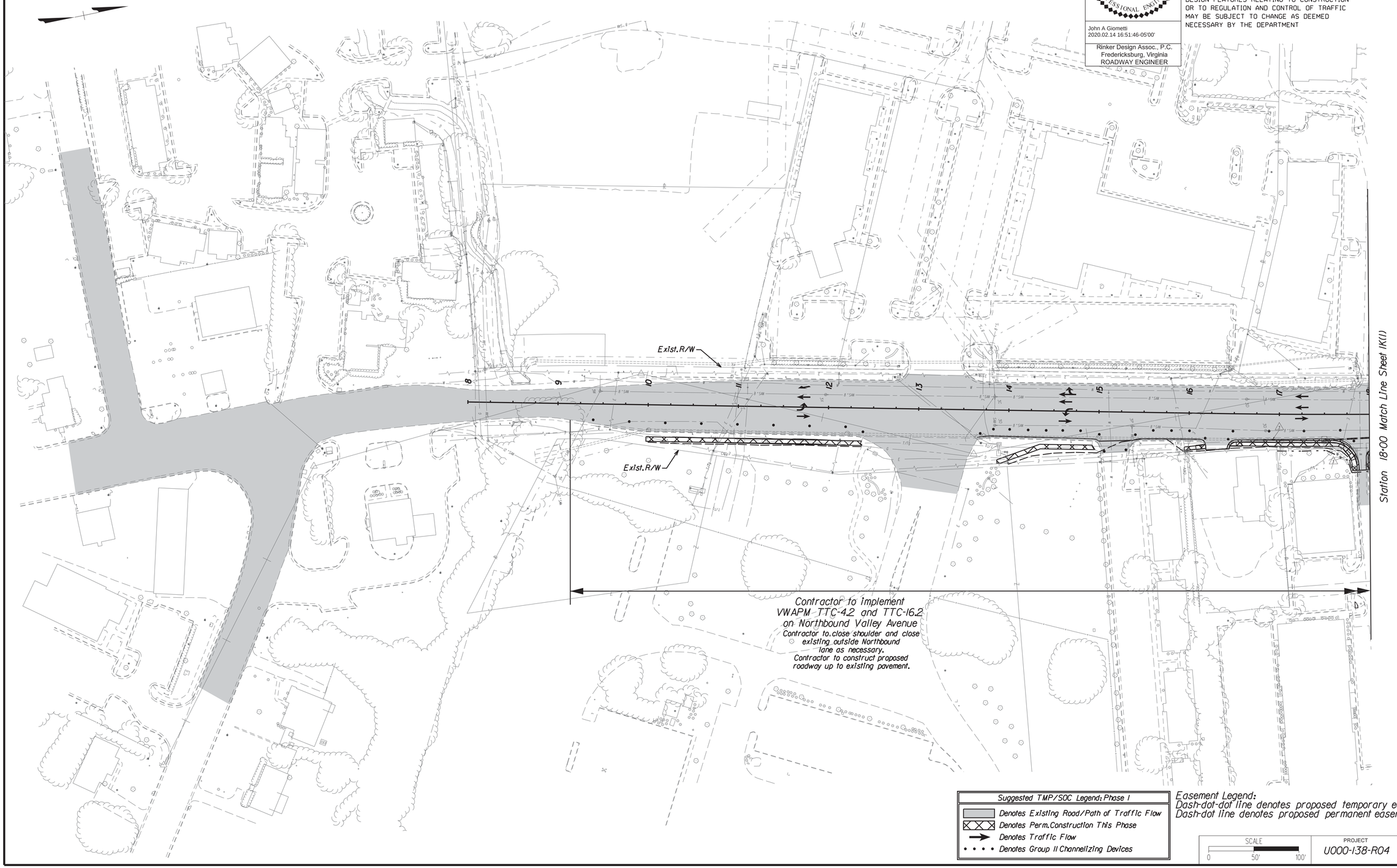

Suggested TMP/SOC Legend: Phase I
Denotes Existing Road/Path of Traffic Flow
Denotes Perm. Construction This Phase
Denotes Traffic Flow
Denotes Group II Channelizing Devices

Easement Legend:
Dash-dot-dot line denotes proposed temporary easement.
Dash-dot line denotes proposed permanent easement.

SCALE	PROJECT	SHEET NO.
0 50' 100'	U000-138-R04	IK

2/14/2020
4:39:16 PM

d1030130011k(1).dgn
Plotted By: mbeales

PROJECT MANAGER Perry Eisenach, P.E. - City of Winchester (540) 667-2085
SURVEYED BY, DATE Sidney Thomas, L.S. - Rinker Design Associates (703) 368-7373, October 2014
DESIGN BY John A. Giometti, P.E. - Rinker Design Associates (703) 334-0060
SUBSURFACE UTILITY BY, DATE Matthew Bansiem - Mid Atlantic Utility Locating (703) 378-0100, August 2014

Rinker Design Associates, P.C.
Civil Engineering - Surveying - Environmental
Transportation - Right of Way Services
Office Locations
Corporate Headquarters: 10596 Main St., Fairfax, VA 22030, Phone: (703) 591-2613, Fax: (703) 591-0444
Fredericksburg: 2001 Plank Road, Suite 101, Fredericksburg, VA 22401, Phone: (540) 373-4650, Fax: (540) 373-4651
Winchester: 107 Piccadilly Drive, Suite 100, Winchester, VA 22601, Phone: (540) 665-9300, Fax: (540) 665-9301

PHASE I TMP/SOC

COMMONWEALTH OF VIRGINIA
JOHN A. GIOMETTI
Lic. No. 032300
PROFESSIONAL ENGINEER

John A Giometti
2020.02.14 16:51:26-05'00'

Rinker Design Assoc., P.C.
Fredericksburg, Virginia
ROADWAY ENGINEER

REVISED	STATE	STATE ROUTE	STATE PROJECT	SHEET NO.
	VA.	II	U000-138-R04 R201,C501	IK(1)

DESIGN FEATURES RELATING TO CONSTRUCTION OR TO REGULATION AND CONTROL OF TRAFFIC MAY BE SUBJECT TO CHANGE AS DEEMED NECESSARY BY THE DEPARTMENT

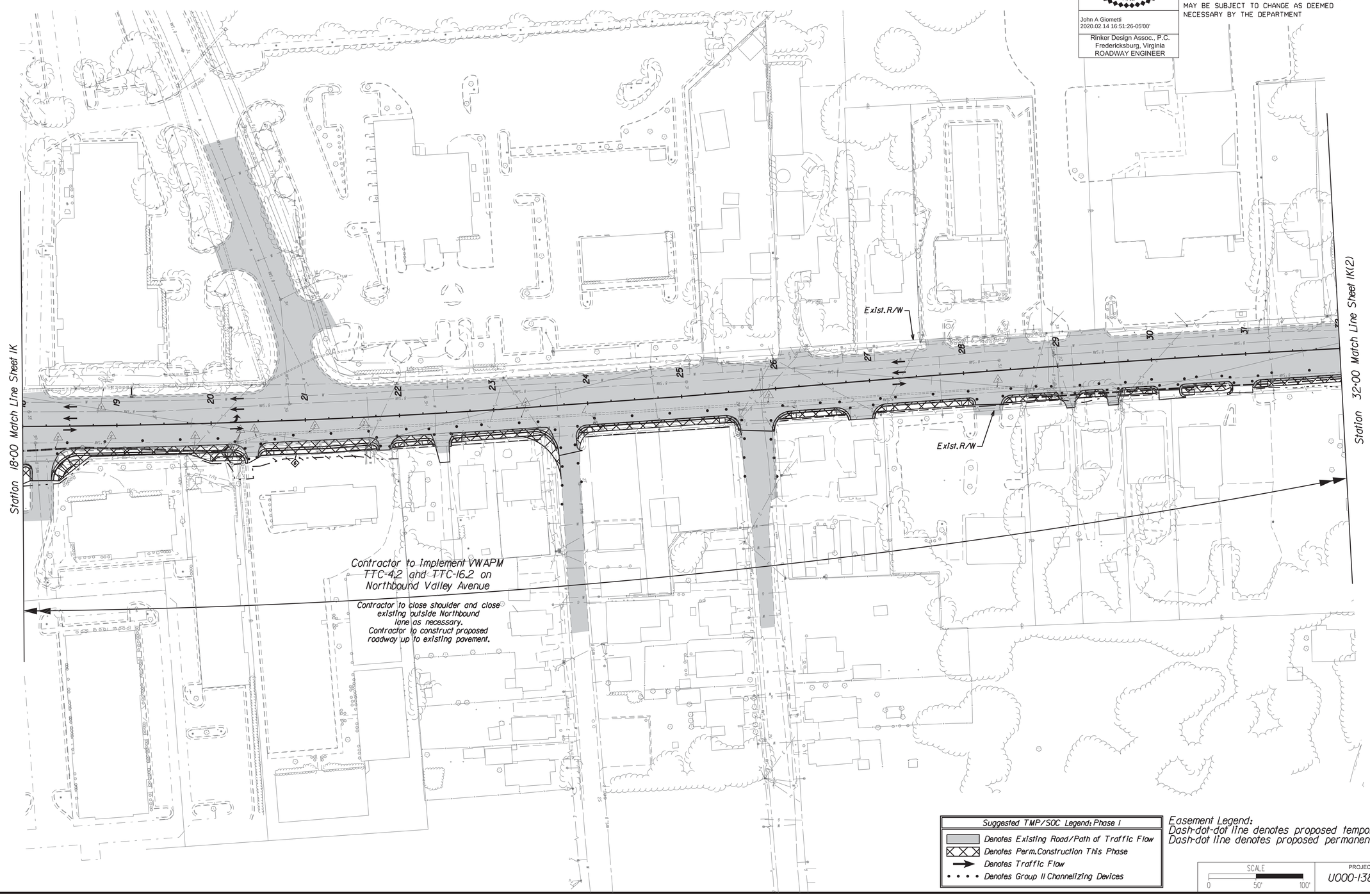

Suggested TMP/SOC Legend: Phase I
Denotes Existing Road/Path of Traffic Flow
Denotes Perm. Construction This Phase
Denotes Traffic Flow
Denotes Group II Channelizing Devices

Easement Legend:
Dash-dot-dot line denotes proposed temporary easement.
Dash-dot line denotes proposed permanent easement.

SCALE	PROJECT	SHEET NO.
0 50' 100'	U000-138-R04	IK(1)

Rinker Design Associates, P.C.
Civil Engineering - Surveying - Land Planning
Transportation - Environmental
Right of Way Services

Office Locations
Fredericksburg, Virginia
2021 Plank Road
Suite 100
Fredericksburg, VA 22401
Phone: (540) 373-3373
Fax: (540) 373-0488

Norfolk, Virginia
1000 Ballpark Drive
Suite 100
Norfolk, VA 23510
Phone: (757) 625-2000
Fax: (757) 625-2001

Richmond, Virginia
4437 Ridgefield Road
Suite 100
Richmond, VA 23230
Phone: (804) 288-8000
Fax: (804) 288-8001

Roanoke, Virginia
3100 Electric Road
Suite 100
Roanoke, VA 24018
Phone: (540) 563-0111
Fax: (540) 563-0119

PROJECT MANAGER Perry Eisenach, P.E. - City of Winchester (540) 667-2085
SURVEYED BY, DATE Sidney Thomas, L.S. - Rinker Design Associates (703) 368-7373, October 2014
DESIGN BY John A. Giometti, P.E. - Rinker Design Associates (703) 334-0060
SUBSURFACE UTILITY BY, DATE Matthew Bansiem - Mid Atlantic Utility Locating (703) 378-0100, August 2014

PHASE I TMP/SOC

COMMONWEALTH OF VIRGINIA
JOHN A. GIOMETTI
Lic. No. 032300
PROFESSIONAL ENGINEER

John A Giometti
2020.02.14 16:51:04-05'00'

Rinker Design Assoc., P.C.
Fredericksburg, Virginia
ROADWAY ENGINEER

REVISED	STATE	STATE ROUTE	STATE PROJECT	SHEET NO.
	VA.	II	U000-138-R04 R201,C501	IK(2)

DESIGN FEATURES RELATING TO CONSTRUCTION OR TO REGULATION AND CONTROL OF TRAFFIC MAY BE SUBJECT TO CHANGE AS DEEMED NECESSARY BY THE DEPARTMENT

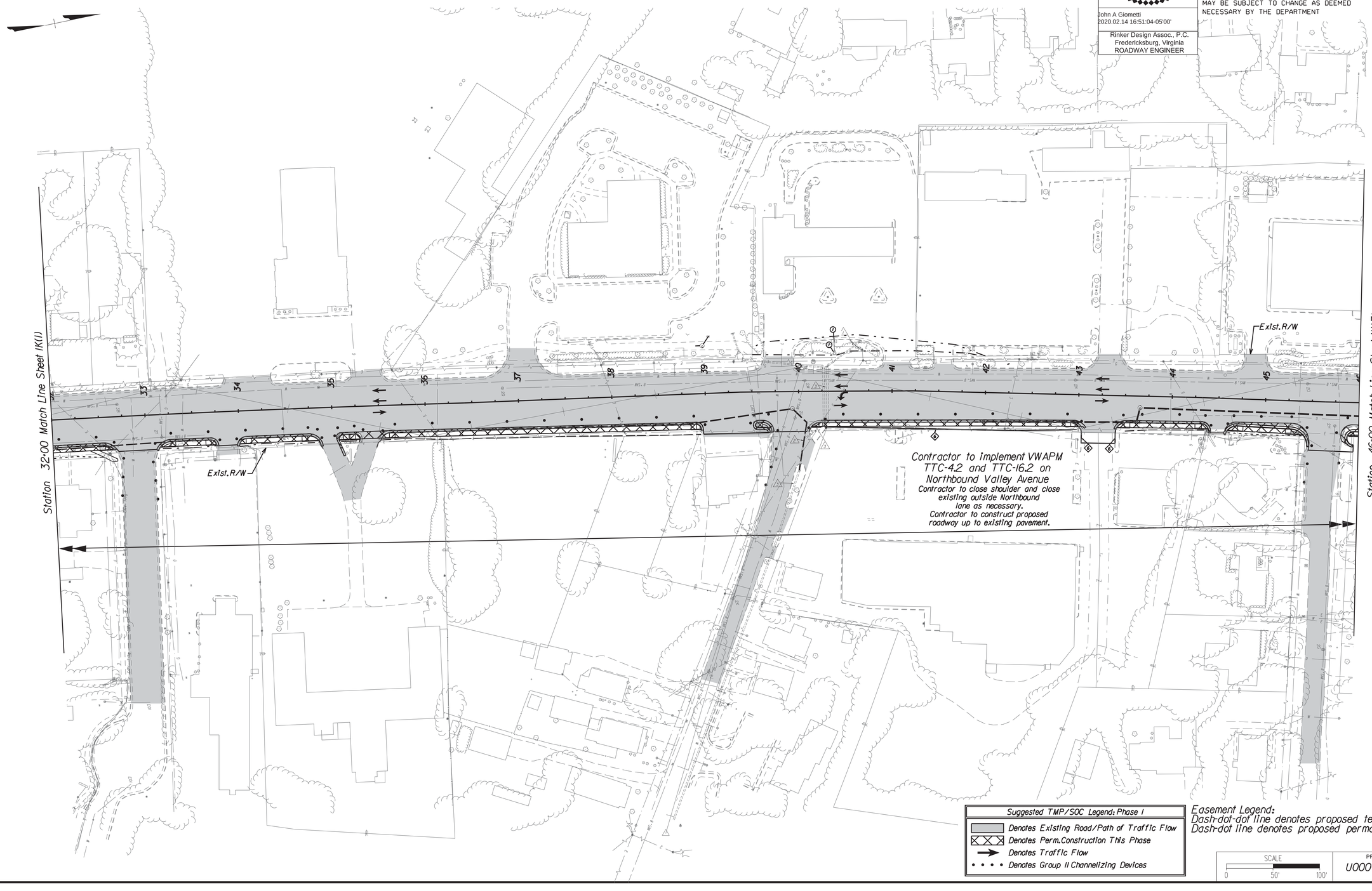

Suggested TMP/SOC Legend: Phase I
Denotes Existing Road/Path of Traffic Flow
Denotes Perm.Construction This Phase
Denotes Traffic Flow
Denotes Group II Channelizing Devices

Easement Legend:
Dash-dot-dot line denotes proposed temporary easement.
Dash-dot line denotes proposed permanent easement.

SCALE	PROJECT	SHEET NO.
0 50' 100'	U000-138-R04	IK(2)

2/14/2020
4:39:22 PM

d1030130011k(3).dgn
Plotted By: mbeales

PROJECT MANAGER Perry Eisenach, P.E. - City of Winchester (540) 667-2085
SURVEYED BY, DATE Sidney Thomas, L.S. - Rinker Design Associates (703) 368-7373, October 2014
DESIGN BY John A. Giometti, P.E. - Rinker Design Associates (703) 334-0060
SUBSURFACE UTILITY BY, DATE Matthew Bansiem - Mid Atlantic Utility Locating (703) 378-0100, August 2014

PHASE I TMP/SOC

COMMONWEALTH OF VIRGINIA
JOHN A. GIOMETTI
Lic. No. 032300
PROFESSIONAL ENGINEER

John A Giometti
2020.02.14 16:50:49-05'00'

Rinker Design Assoc., P.C.
Fredericksburg, Virginia
ROADWAY ENGINEER

REVISED	STATE	STATE ROUTE	STATE PROJECT	SHEET NO.
	VA.	II	U000-138-R04 R201,C501	IK(3)

DESIGN FEATURES RELATING TO CONSTRUCTION OR TO REGULATION AND CONTROL OF TRAFFIC MAY BE SUBJECT TO CHANGE AS DEEMED NECESSARY BY THE DEPARTMENT

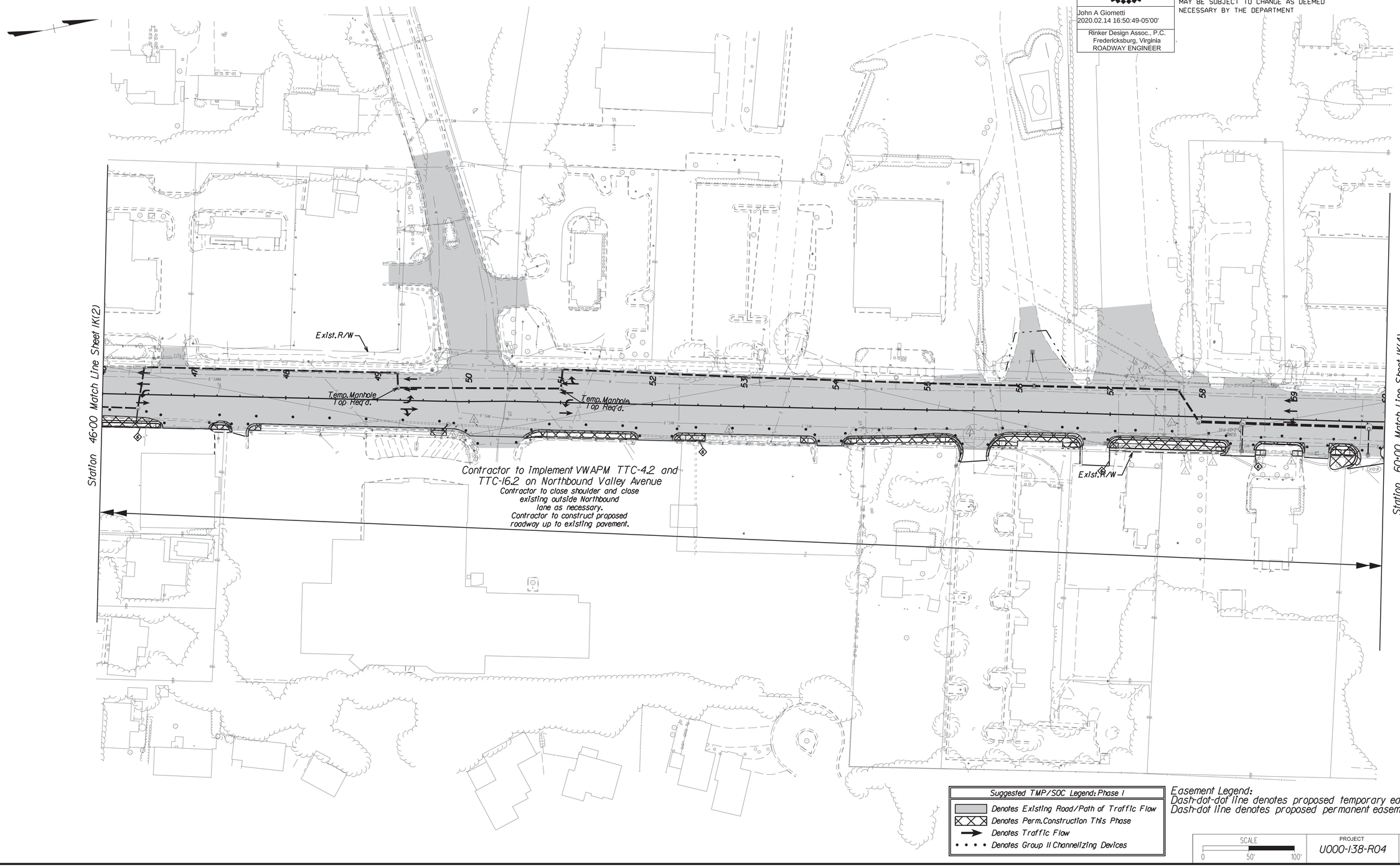

Suggested TMP/SOC Legend: Phase I
Denotes Existing Road/Path of Traffic Flow
Denotes Perm. Construction This Phase
Denotes Traffic Flow
Denotes Group II Channelizing Devices

Easement Legend:
Dash-dot-dot line denotes proposed temporary easement.
Dash-dot line denotes proposed permanent easement.

SCALE	PROJECT	SHEET NO.
0 50' 100'	U000-138-R04	IK(3)

Rinker Design Associates, P.C.
Civil Engineering - Surveying - Transportation
Environmental - Transportation - Right of Way Services
Office Locations
Fredericksburg, VA 22401 Phone: (540) 373-1460 Fax: (540) 373-0149
Sterling, VA 20164 Phone: (703) 834-0710 Fax: (703) 834-0144
4411 Plank Lane Drive Fredericksburg, VA 22407 Phone: (540) 373-1460 Fax: (540) 373-0149
4411 Parkway Boulevard Suite 100 Sterling, VA 20164 Phone: (703) 834-0710 Fax: (703) 834-0144

2/14/2020
4:39:25 PM

d1030130011k(4).dgn
Plotted By: mbeales

PROJECT MANAGER Perry Eisenach, P.E. - City of Winchester (540) 667-2085
SURVEYED BY, DATE Sidney Thomas, L.S. - Rinker Design Associates (703) 368-7373, October 2014
DESIGN BY John A. Giometti, P.E. - Rinker Design Associates (703) 334-0060
SUBSURFACE UTILITY BY, DATE Matthew Bansiem - Mid Atlantic Utility Locating (703) 378-0100, August 2014

Rinker Design Associates, P.C.
Civil Engineering - Surveying - Environmental
Transportation - Right of Way Services
SHOPTALK VIA E-MAIL

Office Locations
Corporate Headquarters
10437 Innovation Drive
Suite 100
Manassas, VA 20110
Phone: (703) 334-0060
Fax: (703) 335-0369

Winchester
107 North Kent Street
Suite 101
Winchester, VA 22601
Phone: (540) 667-2085
Fax: (540) 665-0282

Fredericksburg
2021 Plank Road
Suite 100
Fredericksburg, VA 22401
Phone: (540) 373-4300
Fax: (540) 373-0488

PHASE I TMP/SOC

COMMONWEALTH OF VIRGINIA
JOHN A. GIOMETTI
Lic. No. 032300
PROFESSIONAL ENGINEER

John A Giometti
2020.02.14 16:50:33-05'00'

Rinker Design Assoc., P.C.
Fredericksburg, Virginia
ROADWAY ENGINEER

REVISED	STATE	STATE ROUTE	STATE PROJECT	SHEET NO.
	VA.	II	U000-138-R04 R201,C501	IK(4)

DESIGN FEATURES RELATING TO CONSTRUCTION OR TO REGULATION AND CONTROL OF TRAFFIC MAY BE SUBJECT TO CHANGE AS DEEMED NECESSARY BY THE DEPARTMENT

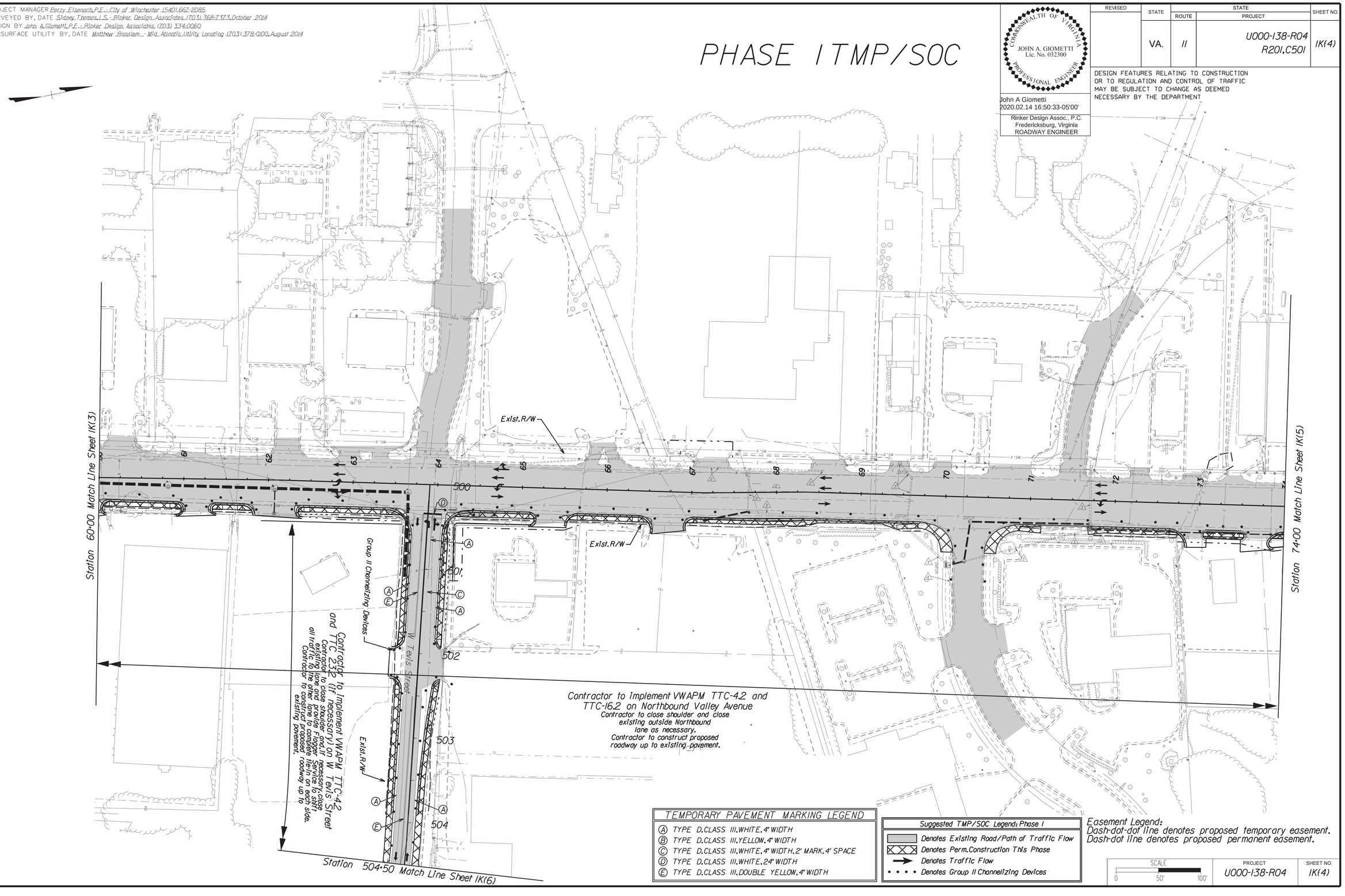

TEMPORARY PAVEMENT MARKING LEGEND
(A) TYPE D, CLASS III, WHITE, 4" WIDTH
(B) TYPE D, CLASS III, YELLOW, 4" WIDTH
(C) TYPE D, CLASS III, WHITE, 4" WIDTH, 2' MARK, 4' SPACE
(D) TYPE D, CLASS III, WHITE, 24" WIDTH
(E) TYPE D, CLASS III, DOUBLE YELLOW, 4" WIDTH

Suggested TMP/SOC Legend: Phase I
Denotes Existing Road/Path of Traffic Flow
Denotes Perm. Construction This Phase
Denotes Traffic Flow
Denotes Group II Channelizing Devices

Easement Legend:
Dash-dot-dot line denotes proposed temporary easement.
Dash-dot line denotes proposed permanent easement.

SCALE	PROJECT	SHEET NO.
0 50' 100'	U000-138-R04	IK(4)

2/14/2020
4:39:27 PM

d:\0301300\ik(5).dgn
Plotted By: mbeales

PROJECT MANAGER Perry Eisenach, P.E. - City of Winchester (540) 667-2085
SURVEYED BY, DATE Sidney Thomas, L.S. - Rinker Design Associates (703) 368-7373, October 2014
DESIGN BY John A. Giometti, P.E. - Rinker Design Associates (703) 334-0060
SUBSURFACE UTILITY BY, DATE Matthew Bansiem - Mid Atlantic Utility Locating (703) 378-0100, August 2014

PHASE I TMP/SOC

COMMONWEALTH OF VIRGINIA
JOHN A. GIOMETTI
Lic. No. 032300
PROFESSIONAL ENGINEER

John A Giometti
2020.02.14 16:50:07-05'00'

Rinker Design Assoc., P.C.
Fredericksburg, Virginia
ROADWAY ENGINEER

REVISED	STATE	STATE ROUTE	STATE PROJECT	SHEET NO.
	VA.	II	U000-138-R04 R201, C501	IK(5)

DESIGN FEATURES RELATING TO CONSTRUCTION OR TO REGULATION AND CONTROL OF TRAFFIC MAY BE SUBJECT TO CHANGE AS DEEMED NECESSARY BY THE DEPARTMENT

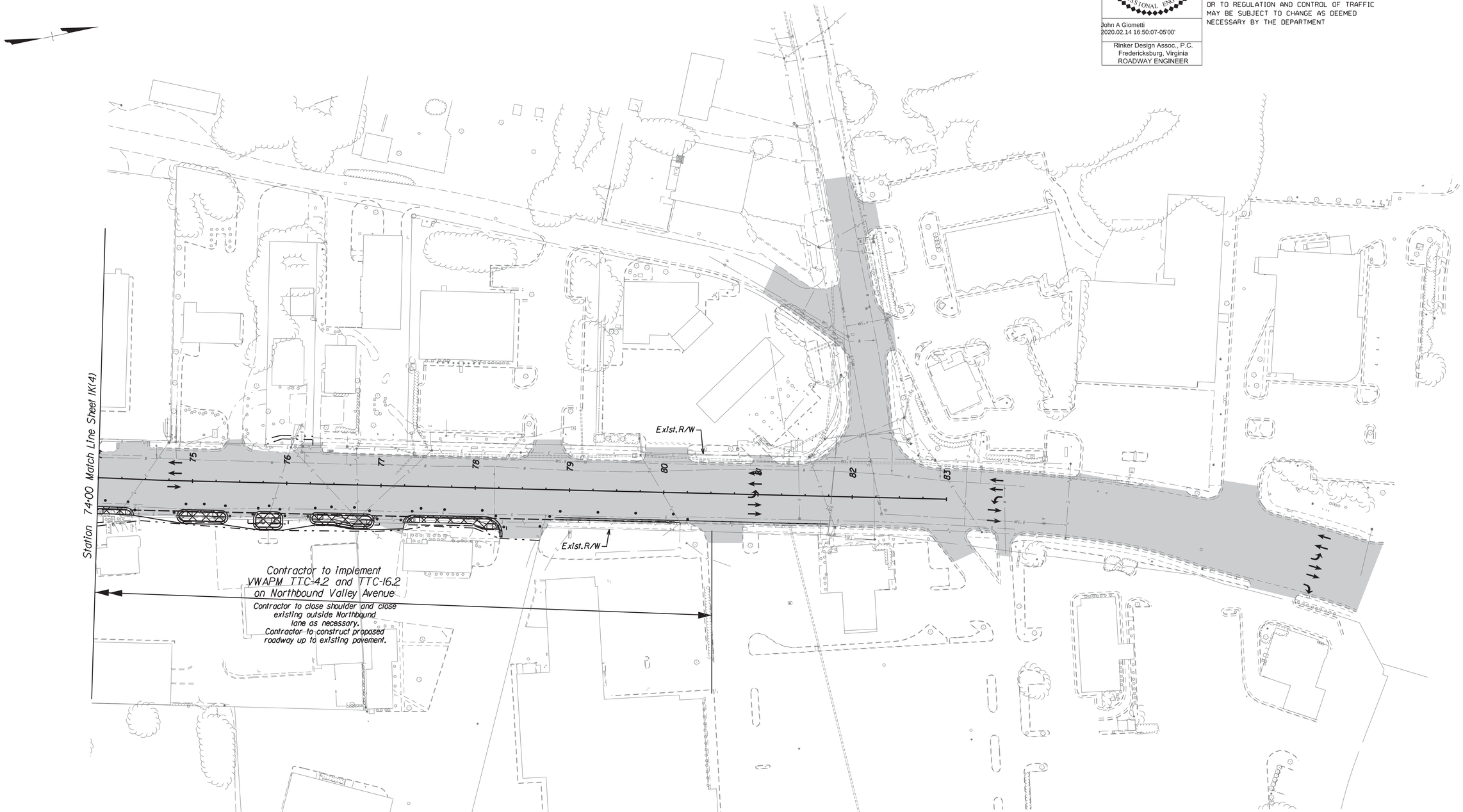

Suggested TMP/SOC Legend: Phase I
Denotes Existing Road/Path of Traffic Flow
Denotes Perm. Construction This Phase
Denotes Traffic Flow
Denotes Group II Channelizing Devices

Easement Legend:
Dash-dot-dot line denotes proposed temporary easement.
Dash-dot line denotes proposed permanent easement.

SCALE	PROJECT	SHEET NO.
0 50' 100'	U000-138-R04	IK(5)

Rinker Design Associates, P.C.
Civil Engineering - Surveying - Transportation
Environmental Engineering - Right of Way Services
SHOTTON & PARTNERS, D.B.A.
Office Locations
Fredericksburg: 2001 Plank Road, Suite 100, Fredericksburg, VA 22401, Phone: (540) 373-4300, Fax: (540) 373-4310
Leesburg: 1651 Prosperity Avenue, Suite 100, Leesburg, VA 20190, Phone: (703) 334-0060, Fax: (703) 334-0061
Manassas: 9201 Mathis Avenue, Suite 100, Manassas, VA 20110, Phone: (703) 368-7373, Fax: (703) 368-7374

2/14/2020
4:39:30 PM

d1030130011k(6).dgn
Plotted By: mbeales

PROJECT MANAGER Perry Eisenach, P.E. - City of Winchester (540) 667-2085
SURVEYED BY, DATE Sidney Thomas, L.S. - Rinker Design Associates (703) 368-7373, October 2014
DESIGN BY John A. Giometti, P.E. - Rinker Design Associates (703) 334-0060
SUBSURFACE UTILITY BY, DATE Matthew Bansiem - Mid Atlantic Utility Locating (703) 378-0100, August 2014

Rinker Design Associates, P.C.
Civil Engineering - Surveying - Land Planning
Transportation - Environmental
Right of Way Services
Office Locations
Corporate Headquarters: 4101 Dickerson Road, Suite 100, Baltimore, MD 21213, Phone: (410) 243-3333, Fax: (410) 243-3334
Northern Virginia: 4101 Dickerson Road, Suite 100, Baltimore, MD 21213, Phone: (410) 243-3333, Fax: (410) 243-3334
Richmond: 4101 Dickerson Road, Suite 100, Baltimore, MD 21213, Phone: (410) 243-3333, Fax: (410) 243-3334

PHASE I TMP/SOC

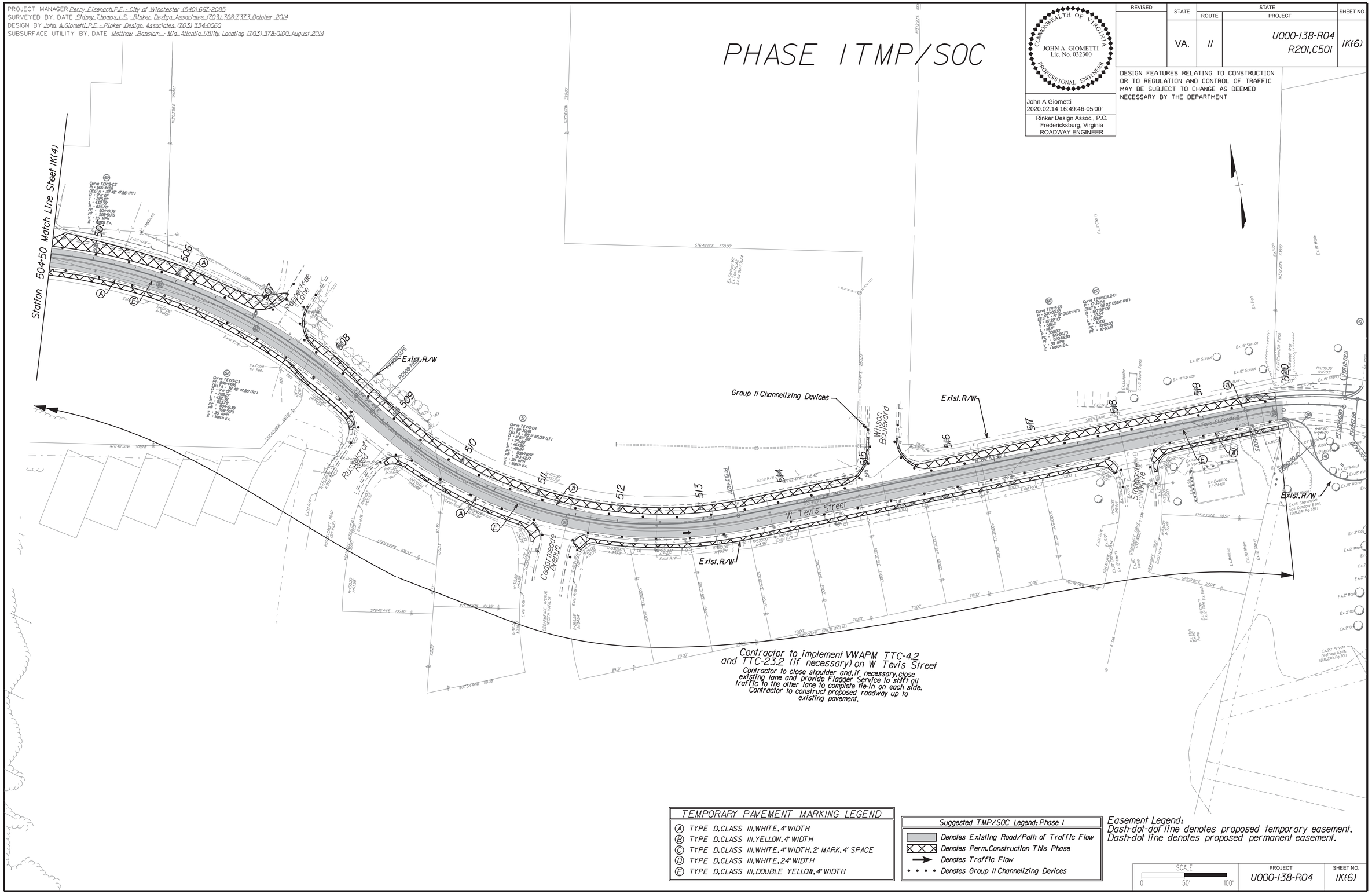

TEMPORARY PAVEMENT MARKING LEGEND
(A) TYPE D, CLASS III, WHITE, 4" WIDTH
(B) TYPE D, CLASS III, YELLOW, 4" WIDTH
(C) TYPE D, CLASS III, WHITE, 4" WIDTH, 2' MARK, 4' SPACE
(D) TYPE D, CLASS III, WHITE, 24" WIDTH
(E) TYPE D, CLASS III, DOUBLE YELLOW, 4" WIDTH

Suggested TMP/SOC Legend: Phase I	
	Denotes Existing Road/Path of Traffic Flow
	Denotes Perm. Construction This Phase
→	Denotes Traffic Flow
• • • •	Denotes Group II Channelizing Devices

Easement Legend:
Dash-dot-dot line denotes proposed temporary easement.
Dash-dot line denotes proposed permanent easement.

COMMONWEALTH OF VIRGINIA
JOHN A. GIOMETTI
Lic. No. 032300
PROFESSIONAL ENGINEER

John A Giometti
2020.02.14 16:49:46-05'00'

Rinker Design Assoc., P.C.
Fredericksburg, Virginia
ROADWAY ENGINEER

DESIGN FEATURES RELATING TO CONSTRUCTION OR TO REGULATION AND CONTROL OF TRAFFIC MAY BE SUBJECT TO CHANGE AS DEEMED NECESSARY BY THE DEPARTMENT

REVISED	STATE	STATE ROUTE	STATE PROJECT	SHEET NO.
	VA.	11	U000-138-R04 R201,C501	IK(6)

SCALE	PROJECT	SHEET NO.
0 50' 100'	U000-138-R04	IK(6)

2/14/2020
4:39:33 PM

d1030130011(0).dgn
Plotted By: mbeales

PROJECT MANAGER Perry Eisenach, P.E. - City of Winchester (540) 667-2085
SURVEYED BY, DATE Sidney Thomas, L.S. - Rinker Design Associates (703) 368-7373, October 2014
DESIGN BY John A. Giometti, P.E. - Rinker Design Associates (703) 334-0060
SUBSURFACE UTILITY BY, DATE Matthew Bansiem - Mid Atlantic Utility Locating (703) 378-0100, August 2014

PHASE 2 TMP/SOC

COMMONWEALTH OF VIRGINIA
JOHN A. GIOMETTI
Lic. No. 032300
PROFESSIONAL ENGINEER

John A Giometti
2020.02.14 16:49:25-05'00'

Rinker Design Assoc., P.C.
Fredericksburg, Virginia
ROADWAY ENGINEER

REVISED	STATE	STATE ROUTE	STATE PROJECT	SHEET NO.
	VA.	II	U000-138-R04 R201,C501	IL

DESIGN FEATURES RELATING TO CONSTRUCTION OR TO REGULATION AND CONTROL OF TRAFFIC MAY BE SUBJECT TO CHANGE AS DEEMED NECESSARY BY THE DEPARTMENT

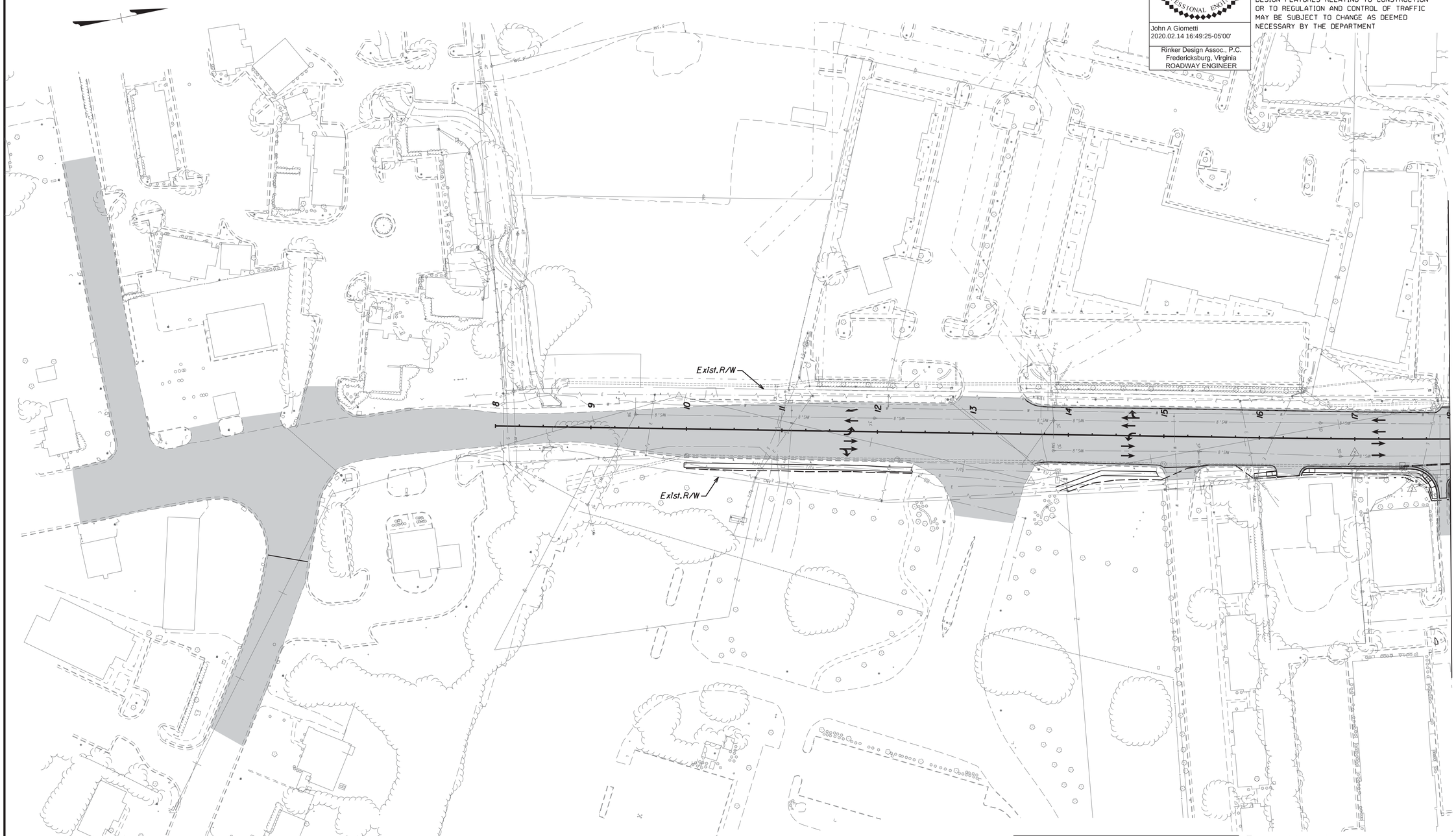

Suggested TMP/SOC Legend: Phase 2
Denotes Existing Road/Path of Traffic Flow
Denotes Perm. Construction This Phase
Denotes Traffic Flow
Denotes Group II Channelizing Devices

Easement Legend:
Dash-dot-dot line denotes proposed temporary easement.
Dash-dot line denotes proposed permanent easement.

SCALE	PROJECT	SHEET NO.
0 50' 100'	U000-138-R04	IL

Rinker Design Associates, P.C.
Civil Engineering • Surveying • Environmental
Transportation • Land Development • Right of Way Services
SHOTPUNCH TEE 38.38.38.
Office Locations
Corporate Headquarters
4420 Daniels Parkway
Suite 100
Fort Myers, FL 33916
Phone: (239) 277-8300
Fax: (239) 277-8301
4420 Daniels Parkway
Suite 100
Fort Myers, FL 33916
Phone: (239) 277-8300
Fax: (239) 277-8301
4420 Daniels Parkway
Suite 100
Fort Myers, FL 33916
Phone: (239) 277-8300
Fax: (239) 277-8301
107 Alpha Drive, Drive
Suite 101
Fredericksburg, VA 22407
Phone: (540) 373-4310
Fax: (540) 373-4311

2/14/2020
4:39:36 PM

d1030130011(1).dgn
Plotted By: mbeales

PROJECT MANAGER Perry Eisenach, P.E. - City of Winchester (540) 667-2085
SURVEYED BY, DATE Sidney Thomas, L.S. - Rinker Design Associates (703) 368-7373, October 2014
DESIGN BY John A. Giometti, P.E. - Rinker Design Associates (703) 334-0060
SUBSURFACE UTILITY BY, DATE Matthew Bansiem - Mid Atlantic Utility Locating (703) 378-0100, August 2014

Office Locations
Corporate Headquarters: 8405 Greensboro Drive, Suite 800, McLean, VA 22102, Phone: (703) 334-0060, Fax: (703) 556-0220
Fredericksburg: 2021 Plank Road, Fredericksburg, VA 22401, Phone: (540) 373-8300, Fax: (540) 373-8301
Winchester: 107 N. Kent Street, Suite 101, Winchester, VA 22601, Phone: (540) 667-2085, Fax: (540) 667-0222
Rinker Design Associates, P.C.
Civil Engineering • Surveying • Environmental
Transportation • Right of Way Services

PHASE 2 TMP/SOC

COMMONWEALTH OF VIRGINIA
JOHN A. GIOMETTI
Lic. No. 032300
PROFESSIONAL ENGINEER

John A Giometti
2020.02.14 16:49:03-05'00'
Rinker Design Assoc., P.C.
Fredericksburg, Virginia
ROADWAY ENGINEER

REVISED	STATE	ROUTE	PROJECT	SHEET NO.
	VA.	II	U000-138-R04 R201,C501	IL(1)

DESIGN FEATURES RELATING TO CONSTRUCTION OR TO REGULATION AND CONTROL OF TRAFFIC MAY BE SUBJECT TO CHANGE AS DEEMED NECESSARY BY THE DEPARTMENT.

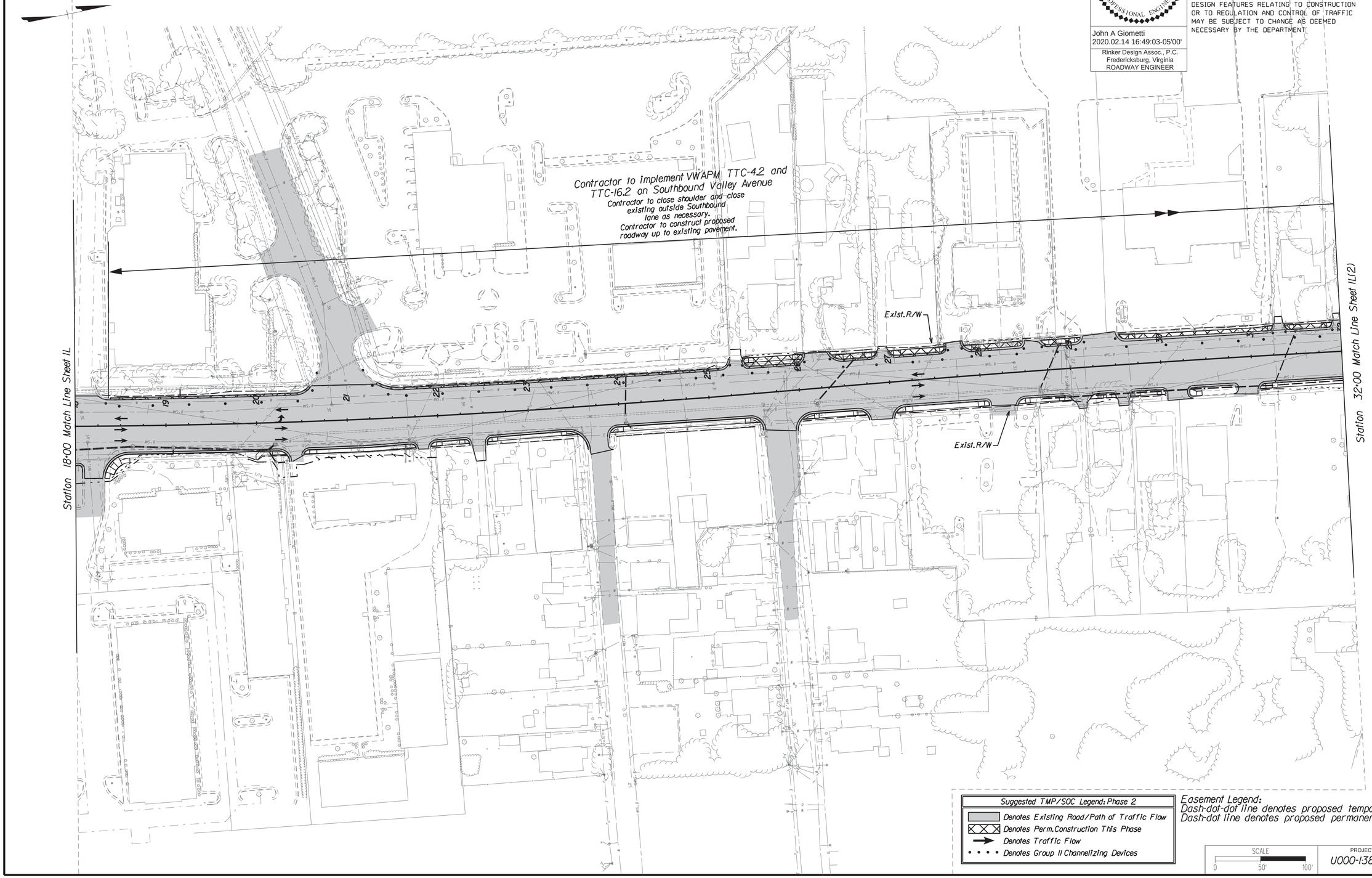

Suggested TMP/SOC Legend: Phase 2
Denotes Existing Road/Path of Traffic Flow
Denotes Perm. Construction This Phase
Denotes Traffic Flow
Denotes Group II Channelizing Devices

Easement Legend:
Dash-dot-dot line denotes proposed temporary easement.
Dash-dot line denotes proposed permanent easement.

SCALE	PROJECT	SHEET NO.
0 50' 100'	U000-138-R04	IL(1)

2/14/2020
4:39:39 PM

d:\0301300\il(2).dgn
Plotted By: mbeales

PROJECT MANAGER Perry Eisenach, P.E. - City of Winchester (540) 667-2085
SURVEYED BY, DATE Sidney Thomas, L.S. - Rinker Design Associates (703) 368-7373, October 2014
DESIGN BY John A. Giometti, P.E. - Rinker Design Associates (703) 334-0060
SUBSURFACE UTILITY BY, DATE Matthew Bansiem - Mid Atlantic Utility Locating (703) 378-0100, August 2014

PHASE 2 TMP/SOC

COMMONWEALTH OF VIRGINIA
JOHN A. GIOMETTI
Lic. No. 032300
PROFESSIONAL ENGINEER

John A Giometti
2020.02.14 16:48:40-05'00'

Rinker Design Assoc., P.C.
Fredericksburg, Virginia
ROADWAY ENGINEER

REVISED	STATE	STATE ROUTE	STATE PROJECT	SHEET NO.
	VA.	11	U000-138-R04 R201,C501	IL(2)

DESIGN FEATURES RELATING TO CONSTRUCTION OR TO REGULATION AND CONTROL OF TRAFFIC MAY BE SUBJECT TO CHANGE AS DEEMED NECESSARY BY THE DEPARTMENT

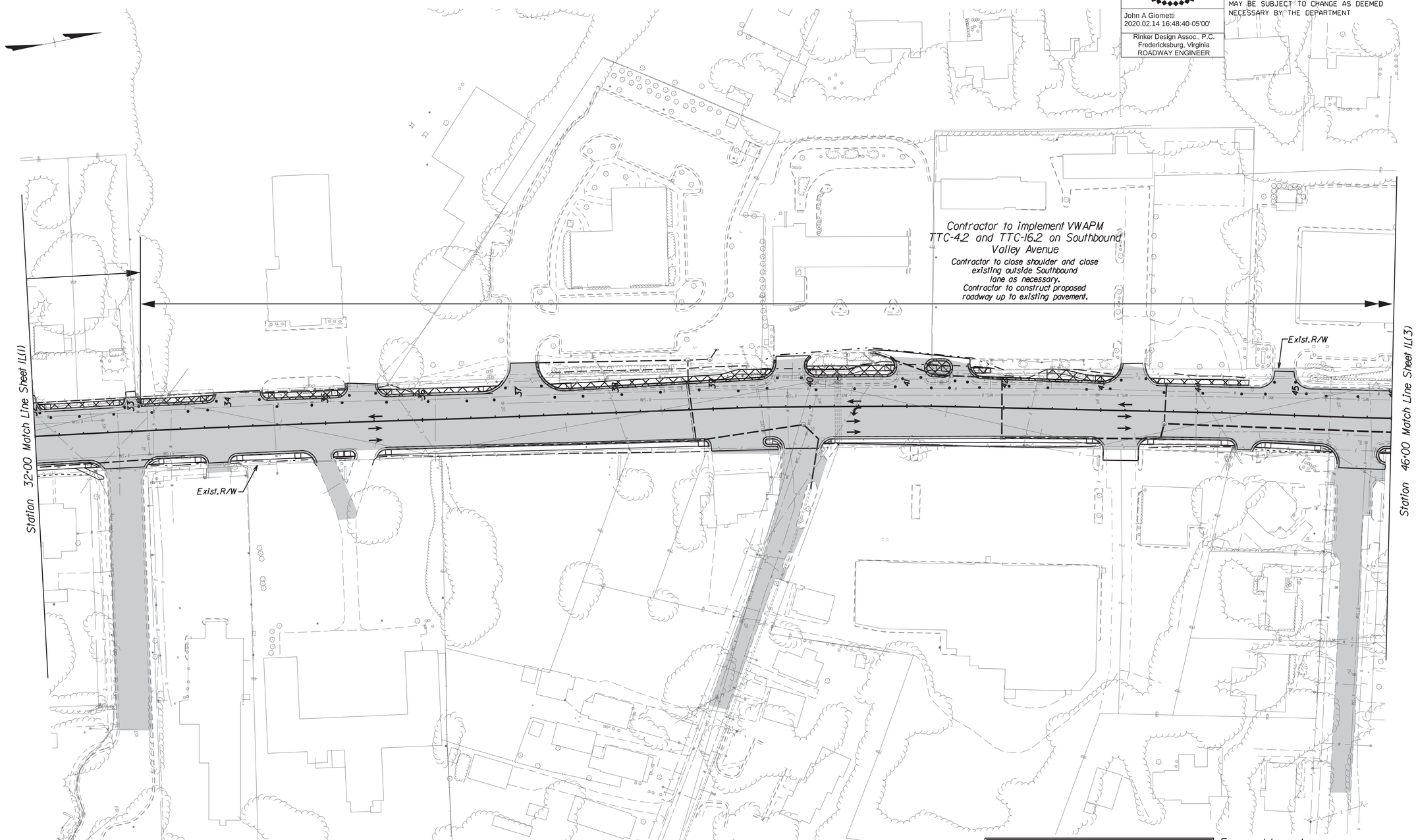

Suggested TMP/SOC Legend: Phase 2
Denotes Existing Road/Path of Traffic Flow
Denotes Perm.Construction This Phase
Denotes Traffic Flow
Denotes Group II Channelizing Devices

Easement Legend:
Dash-dot-dot line denotes proposed temporary easement.
Dash-dot line denotes proposed permanent easement.

SCALE	PROJECT	SHEET NO.
0 50' 100'	U000-138-R04	IL(2)

Rinker Design Associates, P.C.
Civil Engineering - Surveying - Land Planning
Transportation - Environmental
Right of Way Services
SHOTPLANNER.W.R.
Office Locations
Corporate Headquarters: 4101 Dominion Boulevard, Suite 100, Glen Allen, VA 23060, Phone: (804) 747-1970, Fax: (804) 747-5267
Northern Virginia: 4101 Dominion Boulevard, Suite 100, Glen Allen, VA 23060, Phone: (703) 334-0060, Fax: (703) 334-0061
Fredericksburg: 2000 Carl D. Silver Parkway, Suite 100, Fredericksburg, VA 22401, Phone: (540) 373-7020, Fax: (540) 373-0221

2/14/2020
4:39:42 PM

d1030130011131.dgn
Plotted By: mbeales

PROJECT MANAGER Perry Eisenach, P.E. - City of Winchester (540) 667-2085
SURVEYED BY, DATE Sidney Thomas, L.S. - Rinker Design Associates (703) 368-7373, October 2014
DESIGN BY John A. Giometti, P.E. - Rinker Design Associates (703) 334-0060
SUBSURFACE UTILITY BY, DATE Matthew Bansiem - Mid Atlantic Utility Locating (703) 378-0100, August 2014

PHASE 2 TMP/SOC

COMMONWEALTH OF VIRGINIA
JOHN A. GIOMETTI
Lic. No. 032300
PROFESSIONAL ENGINEER

John A Giometti
2020.02.14 16:48:20-05'00'

Rinker Design Assoc., P.C.
Fredericksburg, Virginia
ROADWAY ENGINEER

REVISED	STATE	STATE ROUTE	STATE PROJECT	SHEET NO.
	VA.	11	U000-138-R04 R201,C501	IL(3)

DESIGN FEATURES RELATING TO CONSTRUCTION OR TO REGULATION AND CONTROL OF TRAFFIC MAY BE SUBJECT TO CHANGE AS DEEMED NECESSARY BY THE DEPARTMENT

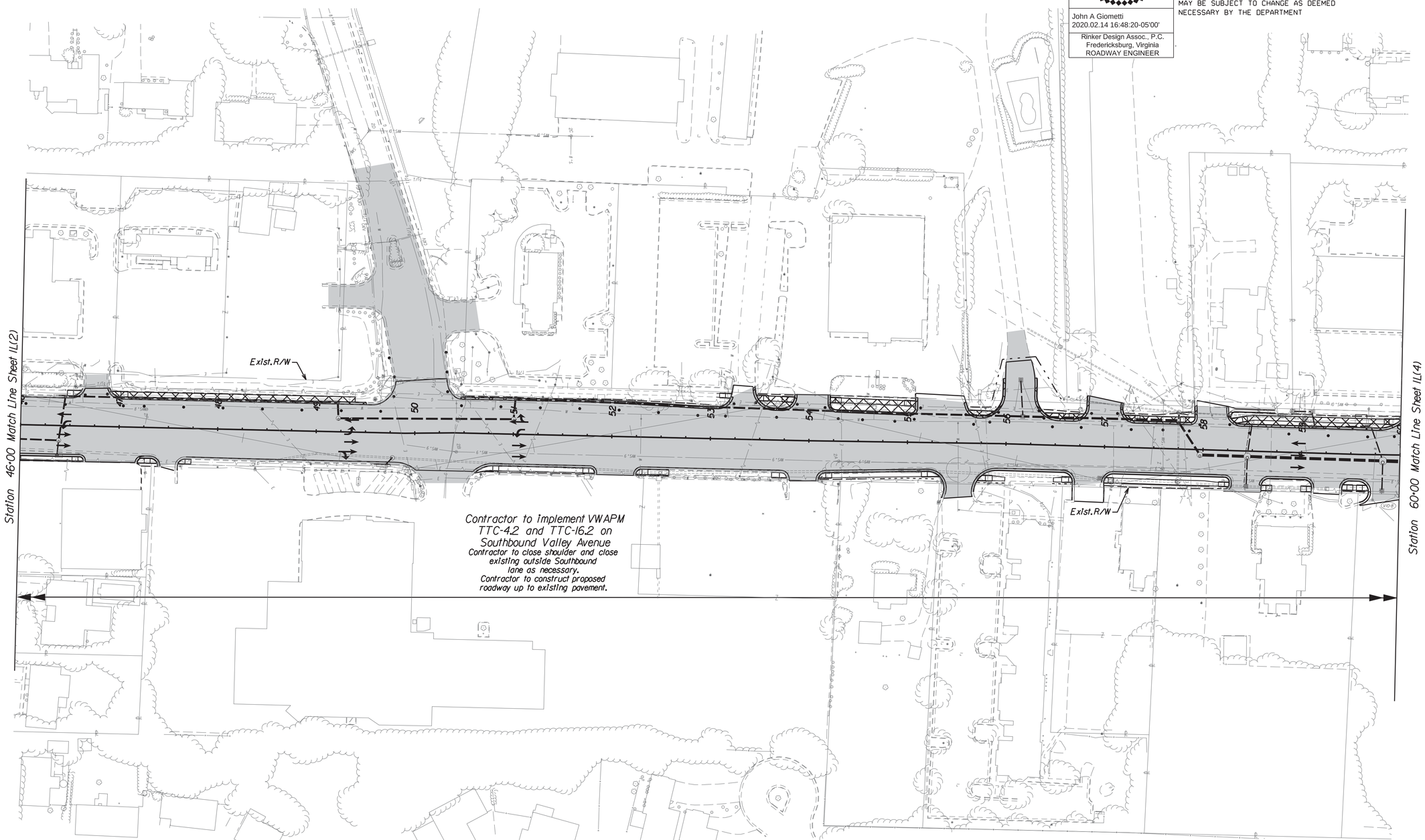

Suggested TMP/SOC Legend: Phase 2
Denotes Existing Road/Path of Traffic Flow
Denotes Perm. Construction This Phase
Denotes Traffic Flow
Denotes Group II Channelizing Devices

Easement Legend:
Dash-dot-dot line denotes proposed temporary easement.
Dash-dot line denotes proposed permanent easement.

SCALE	PROJECT	SHEET NO.
0 50' 100'	U000-138-R04	IL(3)

Rinker Design Associates, P.C.
Civil Engineering • Surveying • Environmental
Transportation • Right of Way Services
Office Locations
Corporate Headquarters: 4670 Corporation Drive, Suite 100, Fairfax, VA 22030, Phone: (703) 334-0060, Fax: (703) 273-2337
4101 Dominion Boulevard, Suite 100, Glen Allen, VA 23060, Phone: (804) 346-8800, Fax: (804) 346-8801
107 Mill Ridge Road, Suite 105, Lynchburg, VA 24502, Phone: (434) 239-0310, Fax: (540) 604-0027

2/14/2020
4:39:45 PM

d10301300il(4).dgn
Plotted By: mbeales

PROJECT MANAGER Perry Eisenach, P.E. - City of Winchester (540) 667-2085
SURVEYED BY, DATE Sidney Thomas, L.S. - Rinker Design Associates (703) 368-7373, October 2014
DESIGN BY John A. Giometti, P.E. - Rinker Design Associates (703) 334-0060
SUBSURFACE UTILITY BY, DATE Matthew Bansiem - Mid Atlantic Utility Locating (703) 378-0100, August 2014

Rinker Design Associates, P.C.
Civil Engineering - Surveying - Environmental
Transportation - Right of Way Services
Office Locations
Corporate Headquarters: 107 Mill Ridge Road, Suite 101, Fredericksburg, VA 22406, Phone: (540) 373-7020, Fax: (540) 373-8693
Northern Office: 4121 Evergreen Boulevard, Suite 100, Harrisonburg, VA 22807, Phone: (540) 434-5690, Fax: (540) 434-5691

PHASE 2 TMP/SOC

COMMONWEALTH OF VIRGINIA
JOHN A. GIOMETTI
Lic. No. 032300
PROFESSIONAL ENGINEER

John A Giometti
2020.02.14 16:47:42-05'00'

Rinker Design Assoc., P.C.
Fredericksburg, Virginia
ROADWAY ENGINEER

REVISED	STATE	STATE ROUTE	STATE PROJECT	SHEET NO.
	VA.	11	U000-138-R04 R201,C501	IL(4)

DESIGN FEATURES RELATING TO CONSTRUCTION OR TO REGULATION AND CONTROL OF TRAFFIC MAY BE SUBJECT TO CHANGE AS DEEMED NECESSARY BY THE DEPARTMENT.

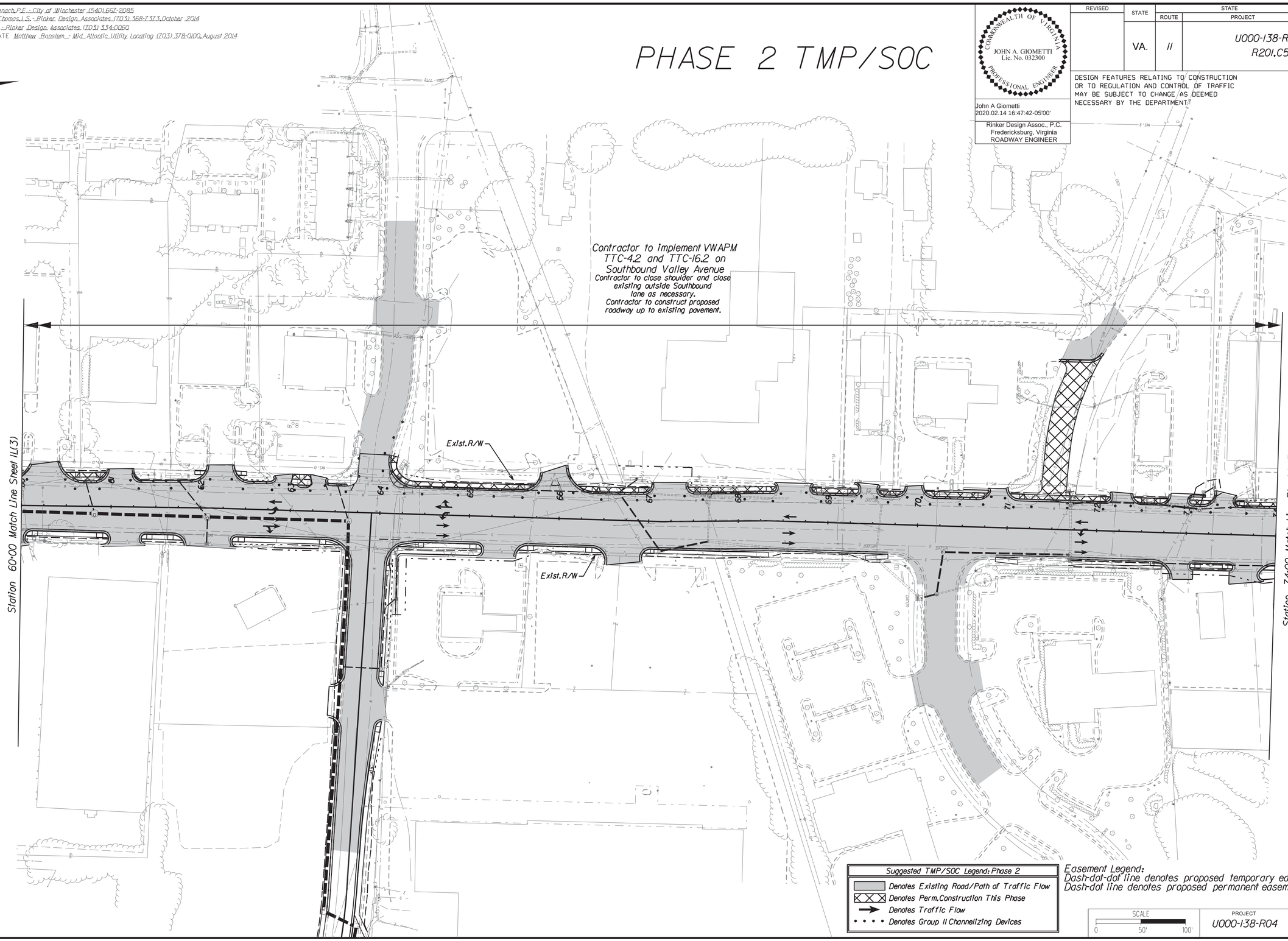

Suggested TMP/SOC Legend: Phase 2
Denotes Existing Road/Path of Traffic Flow
Denotes Perm. Construction This Phase
Denotes Traffic Flow
Denotes Group II Channelizing Devices

Easement Legend:
Dash-dot-dot line denotes proposed temporary easement.
Dash-dot line denotes proposed permanent easement.

SCALE	PROJECT	SHEET NO.
0 50' 100'	U000-138-R04	IL(4)

2/14/2020
4:39:47 PM

d10301300il(5).dgn
Plotted By: mbeales

PROJECT MANAGER Perry Eisenach, P.E. - City of Winchester (540) 667-2085
SURVEYED BY, DATE Sidney Thomas, L.S. - Rinker Design Associates (703) 368-7373, October 2014
DESIGN BY John A. Giometti, P.E. - Rinker Design Associates (703) 334-0060
SUBSURFACE UTILITY BY, DATE Matthew Bansiem - Mid Atlantic Utility Locating (703) 378-0100, August 2014

Rinker Design Associates, P.C.
Civil Engineering - Surveying - Transportation - Environmental - Emergency Services - Right of Way Services

Office Locations
Main Office
4669 Daniels Parkway
Suite 100
Fort Myers, FL 33916
Phone: (239) 939-3535
Fax: (941) 433-5644

4669 Daniels Parkway
Suite 100
Fort Myers, FL 33916
Phone: (239) 939-3535
Fax: (941) 433-5644

4669 Daniels Parkway
Suite 100
Fort Myers, FL 33916
Phone: (239) 939-3535
Fax: (941) 433-5644

107 Mary Lynn Drive
Suite 101
Fredericksburg, VA 22407
Phone: (540) 786-8520
Fax: (540) 899-8011

PHASE 2 TMP/SOC

COMMONWEALTH OF VIRGINIA
JOHN A. GIOMETTI
Lic. No. 032300
PROFESSIONAL ENGINEER

John A Giometti
2020.02.14 16:47:21-05'00'

Rinker Design Assoc., P.C.
Fredericksburg, Virginia
ROADWAY ENGINEER

REVISED	STATE	STATE ROUTE	STATE PROJECT	SHEET NO.
	VA.	II	U000-138-R04 R201,C501	IL(5)

DESIGN FEATURES RELATING TO CONSTRUCTION OR TO REGULATION AND CONTROL OF TRAFFIC MAY BE SUBJECT TO CHANGE AS DEEMED NECESSARY BY THE DEPARTMENT

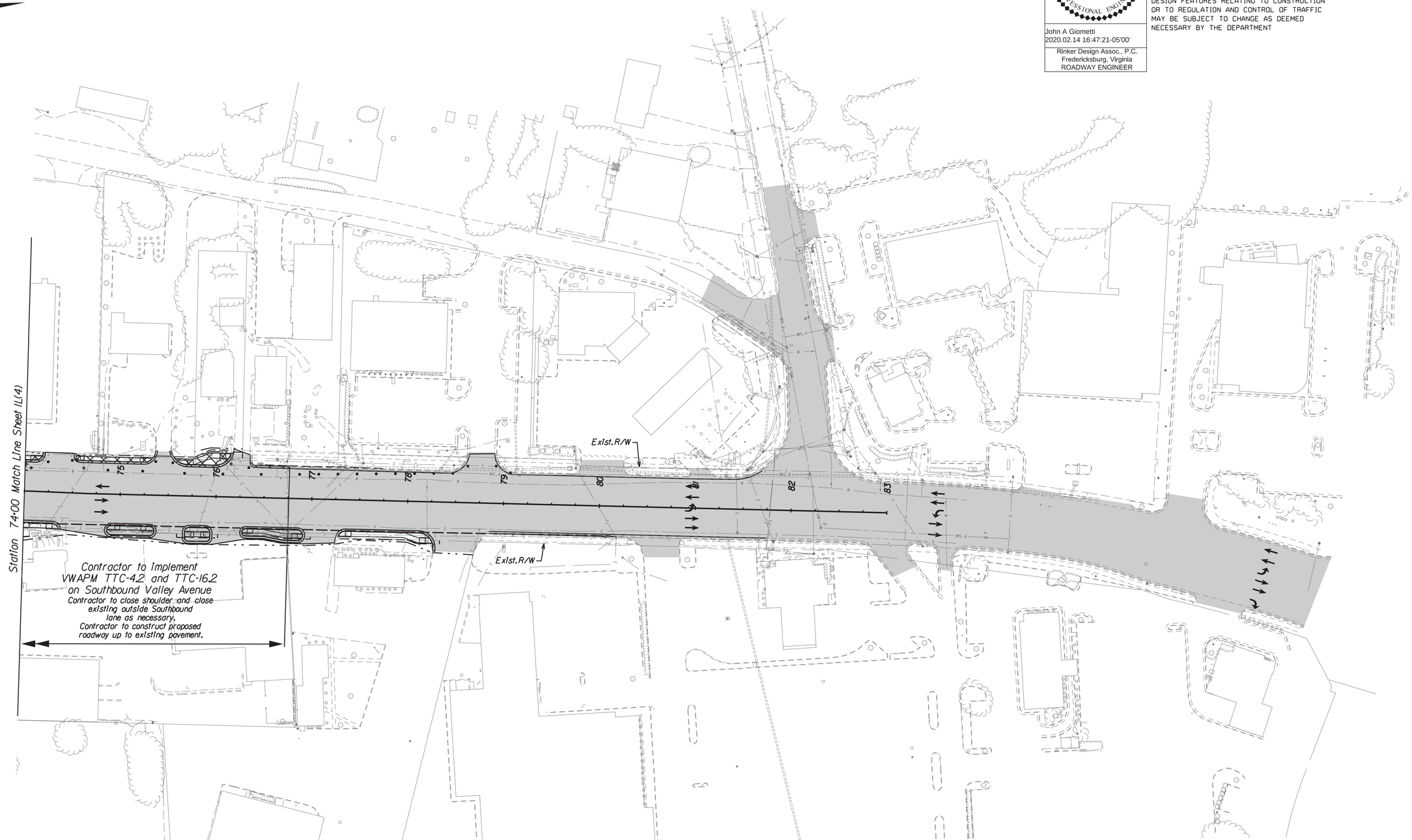

Suggested TMP/SOC Legend: Phase 2
Denotes Existing Road/Path of Traffic Flow
Denotes Perm.Construction This Phase
Denotes Traffic Flow
Denotes Group II Channelizing Devices

Easement Legend:
Dash-dot-dot line denotes proposed temporary easement.
Dash-dot line denotes proposed permanent easement.

SCALE	PROJECT	SHEET NO.
0 50' 100'	U000-138-R04	IL(5)

Rinker Design Associates, P.C.
Civil Engineering - Surveying - Land Planning
Transportation - Environmental
Right of Way Services
www.RDAcivil.com

Office Locations
9285 Discovery Boulevard, Suite 200, Manassas, VA 20109, Phone: (703) 368-7373, Fax: (703) 257-5443
4501 Dominion Boulevard, Suite 100, Glen Allen, VA 23060, Phone: (804) 612-0665, Fax: (804) 612-0668
927 Maple Grove Drive, Suite 105, Fredericksburg, VA 22407, Phone: (540) 548-4470, Fax: (540) 548-4471

PROJECT MANAGER Perry Eisenach, P.E. - City of Winchester (540) 667-2085
SURVEYED BY, DATE Sidney Thomas, L.S. - Rinker Design Associates (703) 368-7373, October 2014
DESIGN BY John A. Giometti, P.E. - Rinker Design Associates (703) 334-0060
SUBSURFACE UTILITY BY, DATE Matthew Ranslem - Mid Atlantic Utility Locating (703) 378-0100, August 2014

EROSION CONTROL PLAN NARRATIVE

COMMONWEALTH OF VIRGINIA
BRIAN P. KOMAR
Lic. No. 045169
PROFESSIONAL ENGINEER

Brian Komar
2020.02.14 10:41:40-05'00'

Rinker Design Assoc., P.C.
Fredericksburg, Virginia
DRAINAGE ENGINEER

REVISED	STATE	ROUTE	PROJECT	SHEET NO.
	VA.	11	U000-138-R04 C501	1N

DESIGN FEATURES RELATING TO CONSTRUCTION OR TO REGULATION AND CONTROL OF TRAFFIC MAY BE SUBJECT TO CHANGE AS DEEMED NECESSARY BY THE DEPARTMENT

FOR EROSION AND SEDIMENT CONTROL LEGEND/SYMBOLS, REFER TO SHEET 2

EROSION AND SEDIMENT CONTROL MINIMUM STANDARDS:

1. PERMANENT OR TEMPORARY SOIL STABILIZATION SHALL BE APPLIED TO DENUDED AREAS WITHIN SEVEN DAYS AFTER FINAL GRADE IS REACHED ON ANY PORTION OF THE SITE.TEMPORARY SOIL STABILIZATION SHALL BE APPLIED WITHIN SEVEN DAYS TO DENUDED AREAS THAT MAY NOT BE AT FINAL GRADE BUT WILL REMAIN DORMANT FOR LONGER THAN 14 DAYS.PERMANENT STABILIZATION SHALL BE APPLIED TO AREAS THAT ARE TO BE LEFT DORMANT FOR MORE THAN ONE YEAR.

2. DURING CONSTRUCTION OF THE PROJECT,SOIL STOCKPILES AND BORROW AREAS SHALL BE STABILIZED OR PROTECTED WITH SEDIMENT TRAPPING MEASURES.THE APPLICANT IS RESPONSIBLE FOR THE TEMPORARY PROTECTION AND PERMANENT STABILIZATION OF ALL SOILS STOCKPILES ONSITE AS WELL AS BORROW AREAS AND SOIL INTENTIONALLY TRANSPORTED FROM THE PROJECT SITE.

3. A PERMANENT VEGETATIVE COVER SHALL BE ESTABLISHED ON DENUDED AREAS NOT OTHERWISE PERMANENTLY STABILIZED.PERMANENT VEGETATION SHALL NOT BE CONSIDERED ESTABLISHED UNTIL A GROUND COVER IS ACHIEVED THAT IS UNIFORM,MATURE ENOUGH TO SURVIVE,AND WILL INHIBIT EROSION.

4. SEDIMENT BASINS AND TRAPS,PERIMETER DIKES,SEDIMENT BARRIERS,AND OTHER MEASURES INTENDED TO TRAP SEDIMENT SHALL BE CONSTRUCTED AS A FIRST STEP IN ANY LAND-DISTURBING ACTIVITY AND SHALL BE MADE FUNCTIONAL BEFORE UP SLOPE LAND DISTURBANCE TAKES PLACE.

5. STABILIZATION MEASURES SHALL BE APPLIED TO EARTHEN STRUCTURES SUCH AS DAMS, DIKES,AND DIVERSIONS IMMEDIATELY AFTER INSTALLATION.

6. SEDIMENT TRAPS AND SEDIMENT BASINS SHALL BE DESIGNED AND CONSTRUCTED BASED UPON THE TOTAL DRAINAGE AREA TO BE SERVED BY THE TRAP OR BASIN.

   a. THE MINIMUM STORAGE CAPACITY OF A SEDIMENT TRAP SHALL BE 134 CUBIC YARDS PER ACRE OF DRAINAGE,AND THE TRAP SHALL ONLY CONTROL DRAINAGE AREAS LESS THAN THREE ACRES.

   b. SURFACE RUNOFF FROM DISTURBED AREAS THAT IS COMPRISED OF FLOW FROM DRAINAGE AREAS GREATER THAN OR EQUAL TO THREE ACRES SHALL BE CONTROLLED BY A SEDIMENT BASIN.THE MINIMUM STORAGE CAPACITY OF A SEDIMENT BASIN SHALL BE 134 CUBIC YARDS PER ACRE OF DRAINAGE AREA.THE OUTFALL SYSTEM SHALL,AT A MINIMUM,MAINTAIN THE STRUCTURAL INTEGRITY OF THE BASIN DURING A TWENTY-FIVE YEAR STORM OF 24-HOUR DURATION.RUNOFF COEFFICIENTS USED IN RUNOFF CALCULATIONS SHALL CORRESPOND TO A BARE EARTH CONDITION OR THOSE CONDITIONS EXPECTED TO EXIST WHILE THE SEDIMENT BASIN IS UTILIZED.

7. CUT AND FILL SLOPES SHALL BE DESIGNED AND CONSTRUCTED IN A MANNER THAT WILL MINIMIZE EROSION. SLOPES THAT ARE FOUND TO BE ERODING EXCESSIVELY WITHIN ONE YEAR OF PERMANENT STABILIZATION SHALL BE PROVIDED WITH ADDITIONAL SLOPE STABILIZING MEASURES UNTIL THE PROBLEM IS CORRECTED.

8. CONCENTRATED RUNOFF SHALL NOT FLOW DOWN CUT OR FILL SLOPES UNLESS CONTAINED WITHIN AN ADEQUATE TEMPORARY OR PERMANENT CHANNEL,FLUME,OR SLOPE DRAIN STRUCTURE.

9. WHENEVER WATER SEEPS FROM A SLOPE FACE,ADEQUATE DRAINAGE OR OTHER PROTECTION SHALL BE PROVIDED.

10. ALL STORM SEWER INLETS THAT ARE MADE OPERABLE DURING CONSTRUCTION SHALL BE PROTECTED SO THAT SEDIMENT-LADEN WATER CANNOT ENTER THE CONVEYANCE SYSTEM WITHOUT FIRST BEING FILTERED OR OTHERWISE TREATED TO REMOVE SEDIMENT.

11. BEFORE NEWLY CONSTRUCTED STORMWATER CONVEYANCE CHANNELS OR PIPES ARE MADE OPERATIONAL,ADEQUATE OUTLET PROTECTION AND ANY REQUIRED TEMPORARY OR PERMANENT CHANNEL LINING SHALL BE INSTALLED IN BOTH THE CONVEYANCE CHANNEL AND RECEIVING CHANNEL.

12. WHEN WORK IN A LIVE WATERCOURSE IS PERFORMED,PRECAUTIONS SHALL BE TAKEN TO MINIMIZE ENCROACHMENT,CONTROL SEDIMENT TRANSPORT,AND STABILZE THE WORK AREA TO THE GREATEST EXTENT POSSIBLE DURING CONSTRUCTION.NON-ERODIBLE MATERIAL SHALL BE USED FOR THE CONSTRUCTION OF CAUSEWAYS AND COFFERDAMS.EARTHEN FILL MAY BE USED FOR THESE STRUCTURES IF ARMORED BY NON-ERODIBLE COVER MATERIALS.

13. WHEN A LIVE WATERCOURSE MUST BE CROSSED BY CONSTRUCTION VEHICLES MORE THAN TWICE IN ANY SIX-MONTH PERIOD,A TEMPORARY VEHICULAR STREAM CROSSING CONSTRUCTED OF NON-ERODIBLE MATERIAL SHALL BE PROVIDED.

14. ALL APPLICABLE FEDERAL,STATE,AND LOCAL REGULATIONS PERTAINING TO WORKING IN OR CROSSING LIVE WATERCOURSES SHALL BE MET.

15. THE BED AND BANKS OF A WATERCOURSE SHALL BE STABILIZED IMMEDIATELY AFTER WORK IN THE WATERCOURSE IS COMPLETED.

16. UNDERGROUND UTILITY LINES SHALL BE INSTALLED IN ACCORDANCE WITH THE FOLLOWING STANDARDS IN ADDITION TO OTHER APPLICABLE CRITERIA:

   a. NO MORE THAN 500 LINEAR FEET OF TRENCH MAY BE OPENED AT ONE TIME.

   b. EXCAVATED MATERIAL SHALL BE PLACED ON UPHILL SIDE OF TRENCHES.

   c. EFFLUENT FROM DEWATERING OPERATIONS SHALL BE FILTERED OR PASSED THROUGH AN APPROVED SEDIMENT TRAPPING DEVICE,OR BOTH,AND DISCHARGED IN A MANNER THAT DOES NOT ADVERSELY AFFECT FLOWING STREAMS OR OFF-SITE PROPERTY.

   d. MATERIAL USED FOR BACKFILLING TRENCHES SHALL BE PROPERLY COMPACTED IN ORDER TO MINIMIZE EROSION AND PROMOTE STABILIZATION.

   e. RESTABILIZATION SHALL BE ACCOMPLISHED IN ACCORDANCE WITH THESE REGULATIONS.

   f. APPLICABLE SAFETY REGULATIONS SHALL BE COMPLIED WITH.

17. WHERE CONSTRUCTION VEHICLE ACCESS ROUTES INTERSECT PAVED OR PUBLIC ROADS, PROVISIONS SHALL BE MADE TO MINIMIZE THE TRANSPORT OF SEDIMENT BY VEHICULAR TRACKING ONTO THE PAVED SURFACE.WHERE SEDIMENT IS TRANSPORTED ONTO A PAVED OR PUBLIC ROAD SURFACE,THE ROAD SURFACE SHALL BE CLEANED THOROUGHLY AT THE END OF EACH DAY. SEDIMENT SHALL BE REMOVED FROM THE ROADS BY SHOVELING OR SWEEPING AND TRANSPORTED TO A SEDIMENT CONTROL DISPOSAL AREA.STREET WASHING SHALL BE ALLOWED ONLY AFTER SEDIMENT IS REMOVED IN THIS MANNER.THIS PROVISION SHALL APPLY TO INDIVIDUAL DEVELOPMENT LOTS AS WELL AS TO LARGER LAND-DISTURBING ACTIVITIES.

18. ALL TEMPORARY EROSION AND SEDIMENT CONTROL MEASURES SHALL BE REMOVED WITHIN 30 DAYS AFTER FINAL SITE STABILIZATION OR AFTER THE TEMPORARY MEASURES ARE NO LONGER NEEDED,UNLESS OTHERWISE AUTHORIZED BY THE LOCAL PROGRAM AUTHORITY.TRAPPED MEASURES SHALL BE PERMANENTLY STABILIZED TO PREVENT FURTHER EROSION AND SEDIMENTATION.

19. PROPERTIES AND WATERWAYS DOWNSTREAM FROM DEVELOPMENT SITE SHALL BE PROTECTED FROM SEDIMENT DEPOSITION,EROSION AND DAMAGE DUE TO INCREASE IN VOLUME,VELOCITY AND PEAK FLOW RATE OF STORMWATER RUNOFF FOR THE STATED FREQUENCY STORM OF 24-HOUR DURATION IN ACCORDANCE WITH THE FOLLOWING STANDARDS AND CRITERIA:

   a. CONCENTRATED STORMWATER RUNOFF LEAVING A DEVELOPMENT SITE SHALL BE DISCHARGED DIRECTLY INTO AN ADEQUATE NATURAL OR MAN-MADE RECEIVING CHANNEL,PIPE,OR STORM SEWER SYSTEM.FOR THOSE SITES WHERE RUNOFF IS DISCHARGED INTO A PIPE OR PIPE SYSTEM, DOWNSTREAM STABILITY ANALYSES AT THE OUTFALL OF THE PIPE OR PIPE SYSTEM SHALL BE PERFORMED.

   b. ADEQUACY OF ALL CHANNELS AND PIPES SHALL BE VERIFIED IN THE FOLLOWING MANNER:

      (1) THE APPLICANT SHALL DEMONSTRATE THAT THE TOTAL DRAINAGE AREA TO THE POINT OF ANALYSIS WITHIN THE CHANNEL IS ONE HUNDRED TIMES GREATER THAN THE CONTRIBUTING DRAINAGE AREA OF THE PROJECT IN QUESTION;OR

      (2) NATURAL CHANNELS SHALL BE ANALYZED BY THE USE OF A TWO-YEAR STORM TO VERIFY THAT STORMWATER WILL NOT OVERTOP CHANNEL BANKS NOR CAUSE EROSION OF CHANNEL BED AND BANKS.

      ALL PREVIOUSLY CONSTRUCTED MAN-MADE CHANNELS SHALL BE ANALYZED BY THE USE OF A TEN-YEAR STORM TO VERIFY THAT STORMWATER WILL NOT OVERTOP ITS BANKS AND BY THE USE OF A TWO-YEAR STORM TO DEMONSTRATE THAT STORMWATER WILL NOT CAUSE EROSION OF CHANNEL BED OR BANKS,AND

      PIPES AND STORM SEWER SYSTEMS SHALL BE ANALYZED BY THE USE OF A TEN-YEAR STORM TO VERIFY THAT STORMWATER WILL BE CONTAINED WITHIN THE PIPE OR SYSTEM.

   c. IF EXISTING NATURAL RECEIVING CHANNELS OR PREVIOUSLY CONSTRUCTED MAN-MADE CHANNELS OR PIPES ARE NOT ADEQUATE,THE APPLICANT SHALL:

   (1) IMPROVE THE CHANNEL TO A CONDITION WHERE A TEN-YEAR STORM WILL NOT OVERTOP THE BANKS AND A TWO-YEAR STORM WILL NOT CAUSE EROSION TO THE CHANNEL BED OR BANKS;

   (2) IMPROVE THE PIPE OR PIPE SYSTEM TO A CONDITION WHERE THE TEN-YEAR STORM IS CONTAINED WITHIN THE APPURTENANCES;

   (3) DEVELOP A SITE DESIGN THAT WILL NOT CAUSE THE PRE-DEVELOPMENT PEAK RUNOFF RATE FROM A TWO-YEAR STORM TO INCREASE WHEN RUNOFF OUTFALLS INTO A NATURAL CHANNEL OR WILL NOT CAUSE THE PRE-DEVELOPMENT PEAK RUNOFF RATE FROM A TEN-YEAR STORM TO INCREASE WHEN RUNOFF OUTFALLS INTO A MAN-MADE CHANNEL;OR

   (4) PROVIDE A COMBINATION OF CHANNEL IMPROVEMENT,STORMWATER DETENTION,OR OTHER MEASURES WHICH IS SATISFACTORY TO THE PLAN-APPROVING AUTHORITY TO PREVENT DOWNSTREAM EROSION.

   d. THE APPLICANT SHALL PROVIDE EVIDENCE OF PERMISSION TO MAKE THE IMPROVEMENTS.

   e. ALL HYDROLOGIC ANALYSES SHALL BE BASED ON EXISTING WATERSHED CHARACTERISTICS AND THE ULTIMATE DEVELOPMENT OF THE SUBJECT PROJECT.

   f. IF THE APPLICANT CHOOSES AN OPTION THAT INCLUDES STORMWATER DETENTION,HE SHALL OBTAIN APPROVAL FROM THE LOCALITY OF A PLAN FOR MAINTENANCE OF THE DETENTION FACILITIES.THE PLAN SHALL SET FORTH THE MAINTENANCE REQUIREMENTS OF THE FACILITY AND THE PERSON RESPONSIBLE FOR PERFORMING THE MAINTENANCE.

   g. OUTFALL FROM A DETENTION FACILITY SHALL BE DISCHARGED TO A RECEIVING CHANNEL,AND ENERGY DISSIPATORS SHALL BE PLACED AT THE OUTFALL OF ALL DETENTION FACILITIES AS NECESSARY TO PROVIDE A STABILIZED TRANSITION FROM THE FACILITY TO THE RECEIVING CHANNEL.

   h. ALL ON-SITE CHANNELS MUST BE VERIFIED TO BE ADEQUATE.

   i. INCREASED VOLUMES OF SHEET FLOWS THAT MAY CAUSE EROSION OR SEDIMENTATION ON ADJACENT PROPERTY SHALL BE DIVERTED TO A STABLE OUTLET,ADEQUATE CHANNEL,PIPE OR PIPE SYSTEM,OR TO A DETENTION FACILITY.

   j. IN APPLYING THESE STORMWATER MANAGEMENT CRITERIA,INDIVIDUAL LOTS OR PARCELS IN A RESIDENTIAL,COMMERCIAL OR INDUSTRIAL DEVELOPMENT SHALL NOT BE CONSIDERED TO BE SEPARATE DEVELOPMENT PROJECTS.INSTEAD,THE DEVELOPMENT,AS A WHOLE,SHALL BE CONSIDERED TO BE A SINGLE DEVELOPMENT PROJECT.HYDROLOGIC PARAMETERS THAT REFLECT THE ULTIMATE DEVELOPMENT CONDITION SHALL BE USED IN ALL ENGINEERING CALCULATIONS.

   k. ALL MEASURES USED TO PROTECT PROPERTIES AND WATERWAYS SHALL BE EMPLOYED IN A MANNER WHICH MINIMIZES IMPACTS ON THE PHYSICAL,CHEMICAL,AND BIOLOGICAL INTEGRITY OF RIVERS,STREAMS AND OTHER WATERS OF THE STATE.

   l. ANY PLAN APPROVED PRIOR TO JULY 1,2014,THAT PROVIDES FOR STORMWATER MANAGEMENT THAT ADDRESSES ANY FLOW RATE CAPACITY AND VELOCITY REQUIREMENTS FOR NATURAL OR MAN-MADE CHANNELS SHALL SATISFY THE FLOW RATE CAPACITY AND VELOCITY REQUIREMENTS FOR NATURAL OR MAN-MADE CHANNELS IF THE PRACTICES ARE DESIGNED TO (I) DETAIN THE WATER QUALITY VOLUME AND TO RELEASE IT OVER 48 HOURS;(II) DETAIN AND RELEASE OF A 24-HOUR PERIOD THE EXPECTED RAINFALL RESULTING FROM THE ONE YEAR,24-HOUR STORM; AND (III) REDUCE THE ALLOWABLE PEAK FLOW RATE RESULTING FROM THE 1.5,2,AND 10-YEAR, 24-HOUR STORMS TO A LEVEL THAT IS LESS THAN OR EQUAL TO THE PEAK FLOW RATE FROM THE SITE ASSUMING IT WAS IN A GOOD FORESTED CONDITION,ACHIEVED THROUGH MULTIPLICATION OF THE FORESTED PEAK FLOW RATE BY A REDUCTION FACTOR THAT IS EQUAL TO THE RUNOFF VOLUME FROM THE SITE WHEN IT WAS IN A GOOD FORESTED CONDITION DIVIDED BY THE RUNOFF VOLUME FROM THE SITE IN ITS PROPOSED CONDITION,AND SHALL BE EXEMPT FROM ANY FLOW RATE CAPACITY AND VELOCITY REQUIREMENTS FOR NATURAL OR MAN-MADE CHANNELS AS DEFINED IN ANY REGULATIONS PROMULGATED PURSUANT TO § 10J-562 OR 10J-570 OF THE ACT.

   m. FOR PLANS APPROVED ON AND AFTER JULY 1,2014,THE FLOW RATE CAPACITY AND VELOCITY REQUIREMENTS OF § 10J-561 A OF THE ACT AND THIS SUBSECTION SHALL BE SATISFIED BY COMPLIANCE WITH WATER QUALITY REQUIREMENTS IN THE STORMWATER MANAGEMENT ACT (10J-603.2 ES SEQ.OF THE CODE OF VIRGINIA) AND ATTENDANT REGULATIONS,UNLESS SUCH LAND-DISTURBING ACTIVITIES ARE IN ACCORDANCE WITH 4VAC50-60-48 OF THE VIRGINIA STORMWATER MANAGEMENT PROGRAM (VSMP) PERMIT REGULATIONS.

   n. COMPLIANCE WITH THE WATER QUALITY MINIMUM STANDARDS SET OUT IN 4VAC 50-60-66 OF THE VIRGINIA STORMWATER MANAGEMENT PROGRAM (VSMP) PERMIT REGULATIONS SHALL BE DEEMED TO SATISFY THE REQUIREMENTS OF MINIMUM STANDARD 19.

EROSION AND SEDIMENT CONTROL NARRATIVE

PROJECT DESCRIPTION -
THE PROJECT EXTENDS FROM THE SOUTHERN CITY LIMITS,0.08 MI.NORTH OF SHAWNEE DR.TO MIDDLE ROAD IN CITY OF WINCHESTER.THE PROJECT CONSISTS OF ROADWAY AND DRAINAGE IMPROVEMENTS.THE PROPOSED ROADWAY WILL CONSIST OF FOUR LANES (WITH SHARED LANE OR BIKE LANE ON OUTSIDES),CENTER ONE-WAY/TWO-WAY LEFT TURN LANE,AND A CONTINUOUS SIDEWALK ON BOTH SIDES ALONG COMMERCIAL AND RESIDENTIAL AREAS.

EXISTING SITE CONDITIONS -
THE PROJECT SITE IS RELATIVELY FLAT AND IN A URBAN,DEVELOPED AREA CONSISTING OF BOTH COMMERCIAL AND RESIDENTIAL PROPERTIES.THE EXISTING SITE CONTAINS MANY AREAS WITH DRAINAGE ISSUES.
ADJACENT AREAS -
THE PROPERTIES ADJACENT TO THE PROJECT ARE HIGHLY DEVELOPED AND CONSIST OF COMMERCIAL AND RESIDENTIAL.THE RESIDENTIAL AREAS CONSIST OF SINGLE FAMILY HOMES AND APARTMENT BUILDINGS.THE COMMERCIAL PROPERTIES CONSIST OF RETAIL,OFFICES,CAR LOTS,SERVICE STATIONS AND RESTAURANTS VARYING IN SIZE.

OFF-SITE AREAS -
THIS EROSION AND SEDIMENT CONTROL PLAN DOES NOT ADDRESS OFF-SITE AREAS.THE CONTRACTOR SHALL BE RESPONSIBLE FOR OBTAINING INDEPENDENT EROSIONS AND SEDIMENT CONTROL PLANS TO COVER OFF-SITE.

SOILS -
THERE IS NO SOIL SURVEY FOR THE CITY OF WINCHESTER.FOR THE PURPOSE OF STORMWATER MANAGEMENT AND STORM SEWER DESIGN A SOIL TYPE C WILL BE USED AS DIRECTED BY THE CITY.

CRITICAL AREAS -
THERE ARE NO CRITICAL AREAS ASSOCIATED WITH THE SITE.

EROSION AND SEDIMENT CONTROL MEASURES -
UNLESS OTHERWISE DIRECTED,ALL VEGETATIVE AND STRUCTURAL EROSION AND SEDIMENT CONTROL PRACTICES SHALL BE CONSTRUCTED AND MAINTAINED IN ACCORDANCE WITH THE MOST CURRENT MINIMUM STANDARDS AND SPECIFICATIONS OF THE VIRGINIA DEPARTMENT OF TRANSPORTATION.DIVERSION DIKES,FILTER BARRIER,AND SILT FENCE FOR EXISTING STORM DRAINAGE STRUCTURES SHALL BE PLACED PRIOR TO EARTH MOVING OPERATIONS.THE MINIMUM STANDARDS OF THE VESCH SHALL BE ADHERED TO UNLESS OTHERWISE WAIVED OR APPROVED BY A VARIANCE.

MAINTENANCE PROGRAM -
THE CONTRACTOR SHALL MAKE A VISUAL INSPECTION OF ALL MECHANICAL CONTROLS AND NEWLY STABILIZED AREAS (I.E.SEEDED, MULCHED,OR SODDED AREAS) ON A DAILY BASIS AND AFTER EACH RAINFALL EVENT TO ENSURE THAT ALL CONTROLS ARE FUNCTIONING PROPERLY.THE FOLLOWING ITEMS WILL BE CHECKED IN PARTICULAR: INLET PROTECTION,SEDIMENT TRAPS,SILT FENCE, AND CHECK DAMS WILL BE CHECKED REGULARLY FOR SEDIMENT BUILDUP WHICH WILL PREVENT DRAINAGE,AND IF THE GRAVEL IS CLOGGED BY SEDIMENT,IT SHALL BE REMOVED AND CLEANED OR REPLACED;THE SILT FENCE BARRIER WILL BE CHECKED REGULARLY FOR UNDERMINING OR DETERIORATION OF THE FABRIC,AND SEDIMENT SHALL BE REMOVED WHEN THE LEVEL OF SEDIMENT DEPOSITION REACHES HALFWAY TO THE TOP OF THE BARRIER; AND THE SEEDED AREAS WILL BE CHECKED REGULARLY TO ENSURE THAT A GOOD STAND IS MAINTAINED,AND AREAS SHALL BE FERTILIZED AND RESEEDED AS NEEDED.ANY DAMAGED CONTROLS SHALL BE REPAIRED BY THE END OF THE WORK DAY,INCLUDING RESEEDING AND MULCHING IF NECESSARY.THE CONTRACTOR MAY INSTALL ADDITIONAL MEASURES SHOULD HE/SHE DEEM IT NECESSARY AT THE INSPECTOR'S APPROVAL.

TEMPORARY & PERMANENT STABILIZATION -
TEMPORARY OR PERMANENT STABILIZATION SHALL BE APPLIED TO ALL DENUDED AREAS WITHIN SEVEN DAYS AFTER FINAL GRADE IS REACHED ON ANY PORTION OF THE SITE.TEMPORARY SOIL STABILIZATION SHALL BE APPLIED WITHIN SEVEN DAYS TO DENUDED AREAS THAT MAY NOT BE AT FINAL GRADE BUT WILL REMAIN DORMANT FOR LONGER THAN 30 DAYS. PERMANENT STABILIZATION SHALL BE APPLIED TO AREAS LEFT DORMANT FOR MORE THAN ONE YEAR.PERMANENT STABILIZATION SHALL BE DONE IN ACCORDANCE WITH THE ROADSIDE DEVELOPMENT SCHEDULE,SHEET 2C.DISTURBED AREAS WITHIN 100 FEET OF DELINEATED WETLANDS SHALL BE CONTINUOUSLY PROSECUTED UNTIL COMPLETED AND STABILIZED IMMEDIATELY UPON COMPLETION OF THE WORK IN EACH IMPACTED AREA.

STORMWATER RUNOFF CONSIDERATIONS -
THE PROJECT PROPOSES A REGIONAL STORMWATER MANAGEMENT (SWM) FACILITY ALONG TEVIS STREET TO REGULATE RUNOFF. THE FACILITY IS BEING CONSTRUCTED AS PART OF ADJACENT HOPE DRIVE EXTENSION PROJECT (RS14-138-R10).

PHASE I LAND DISTURBING/CONSTRUCTION SEQUENCE
1.FLAG LIMITS OF CLEARING.
2.INSTALL TEMPORARY CONTROLS INCLUDING SILT FENCE,INLET PROTECTION,AND CONSTRUCTION ENTRANCES,AS NECESSARY.
3.OBTAIN SITE INSPECTOR'S APPROVAL OF PERIMETER EROSION & SEDIMENT CONTROLS.
4.AFTER INSPECTOR'S APPROVAL OF INITIAL CONTROLS,CLEAR AND GRUB REMAINDER OF THE SITE AS NECESSARY.
5.STABILIZATION ALL DENUDED AREAS ACCORDING TO THE SECTION TITLED "TEMPORARY & PERMANENT STABILIZATION".

PHASE II LAND DISTURBING/CONSTRUCTION SEQUENCE
1.CONSTRUCT REMAINING STORM SEWER SYSTEM AND INSTALL INLET PROTECTIONS AT ALL APPLICABLE LOCATIONS.
2.ROUGH GRADE THE REMAINDER OF THE SITE.
3.INSTALL ALL CURB AND GUTTER AND PLACE BASE STONE PAVEMENT.
4.FINE GRADE SITE AND INSTALL ALL LANDSCAPING INCLUDING PERMANENT SEEDING AND FERTILIZE ALL GRASSED AREAS.
5.HAVE THE INSPECTOR INSPECT ALL AREAS TO DETERMINE IF THEY ARE ADEQUATELY STABILIZED.
6.REMOVE ALL E&S MEASURES.
7.CLEAN SITE OF ALL TRASH AND DEBRIS.

2/14/2020
9:03:11 AM

d1030130011p(03).dgn
Plotted By: mbeales

PROJECT MANAGER Perry Eisenach, P.E. - City of Winchester (540) 667-2085
SURVEYED BY, DATE Sidney Thomas, L.S. - Rinker Design Associates (703) 368-7373, October 2014
DESIGN BY John A. Glometti, P.E. - Rinker Design Associates (703) 334-0060
SUBSURFACE UTILITY BY, DATE Matthew Bansiem - Mid Atlantic Utility Locating (703) 378-0100, August 2014

EROSION CONTROL PLAN PHASE I

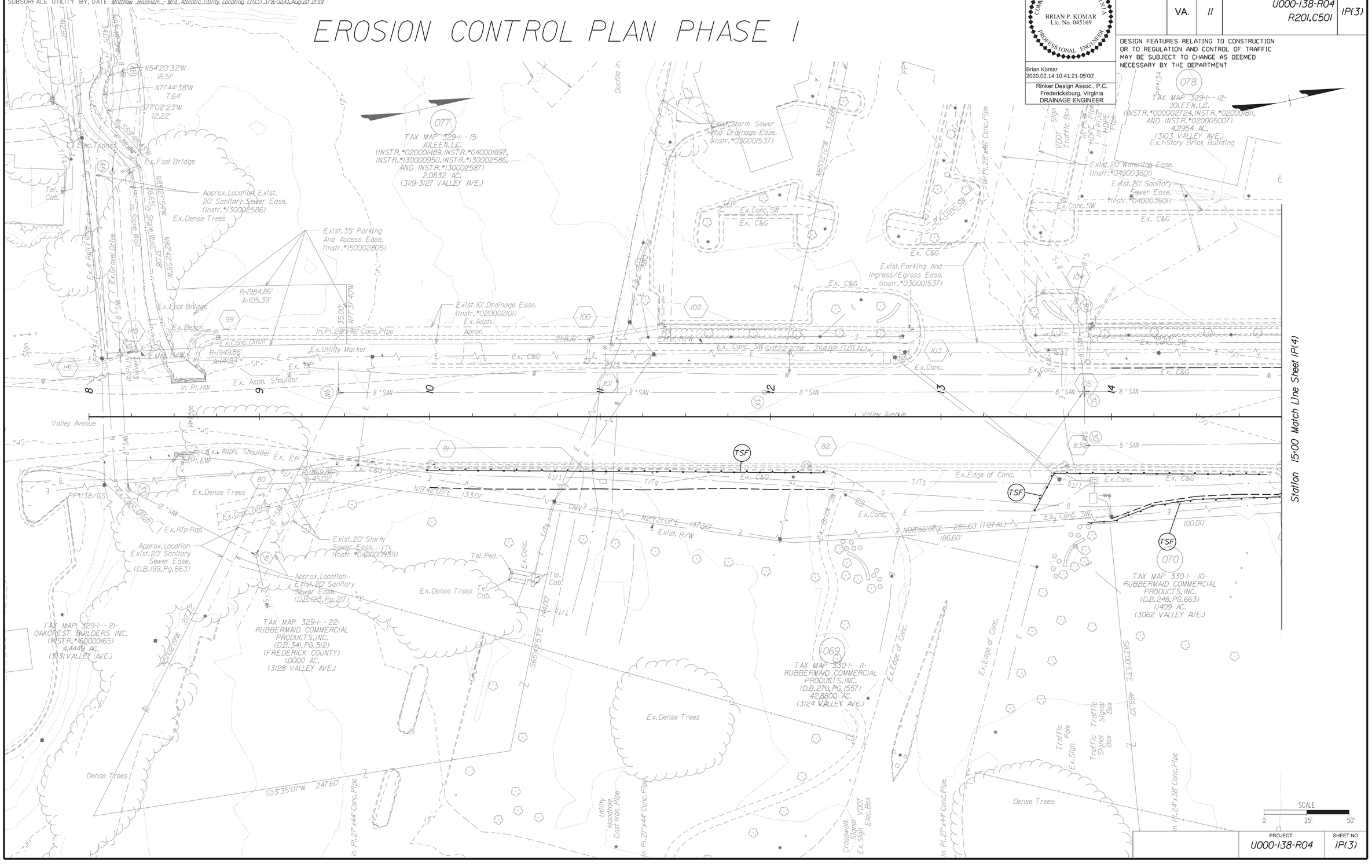

COMMONWEALTH OF VIRGINIA
BRIAN P. KOMAR
Lic. No. 045169
PROFESSIONAL ENGINEER

Brian Komar
2020.02.14 10:41:21-05'00'

Rinker Design Assoc., P.C.
Fredericksburg, Virginia
DRAINAGE ENGINEER

REVISED	STATE	STATE ROUTE	STATE PROJECT	SHEET NO.
	VA.	11	U000-138-R04 R201, C501	IP(3)

DESIGN FEATURES RELATING TO CONSTRUCTION OR TO REGULATION AND CONTROL OF TRAFFIC MAY BE SUBJECT TO CHANGE AS DEEMED NECESSARY BY THE DEPARTMENT

PROJECT	SHEET NO.
U000-138-R04	IP(3)

Rinker Design Associates, P.C.
Civil Engineering • Surveying • Environmental
Transportation • Land Development • Right of Way Services
SHOTTON VILLE, VA.

Office Locations
Corporate Headquarters
10211 Spotsylvania Avenue
Suite 100
Fredericksburg, VA 22408
Phone: (540) 373-8020
Fax: (540) 373-0149

Northern Virginia
4661 Daniels Drive
Suite 100
Chantilly, VA 20151
Phone: (703) 334-0060
Fax: (703) 334-0061

Shenandoah Valley
107 Maple Avenue East
Suite 101
Harrisonburg, VA 22801
Phone: (540) 434-5690
Fax: (540) 434-5691

2/14/2020
9:03:13 AM

d1030130011p(04).dgn
Plotted By: mbeales

PROJECT MANAGER Perry Eisenach, P.E. - City of Winchester (540) 667-2085
SURVEYED BY, DATE Sidney Thomas, L.S. - Rinker Design Associates (703) 368-7373, October 2014
DESIGN BY John A. Glomelli, P.E. - Rinker Design Associates (703) 334-0060
SUBSURFACE UTILITY BY, DATE Matthew Bansiem - Mid Atlantic Utility Locating (703) 378-0100, August 2014

Rinker Design Associates, P.C.
Civil Engineering - Surveying - Environmental
Transportation - Land Development - Right of Way Services

Office Locations
Main Office
107 Mag Lane Drive
Suite 100
Ashland, VA 23005
Phone: (804) 798-9460
Fax: (804) 798-9467

Winchester Office
107 Mag Lane Drive
Suite 100
Ashland, VA 23005
Phone: (540) 667-2085
Fax: (540) 667-2086

Northern Virginia Office
1000 Technology Drive
Suite 100
Fredericksburg, VA 22407
Phone: (540) 373-4300
Fax: (540) 373-4311

EROSION CONTROL PLAN PHASE I

COMMONWEALTH OF VIRGINIA
BRIAN P. KOMAR
Lic. No. 045169
PROFESSIONAL ENGINEER

Brian Komar
2020.02.14 10:41:00-05'00'

Rinker Design Assoc., P.C.
Fredericksburg, Virginia
DRAINAGE ENGINEER

REVISED	STATE	STATE ROUTE	STATE PROJECT	SHEET NO.
12-13-2018	VA.	11	U000-138-R04 R201,C501	IP(4)

DESIGN FEATURES RELATING TO CONSTRUCTION OR TO REGULATION AND CONTROL OF TRAFFIC MAY BE SUBJECT TO CHANGE AS DEEMED NECESSARY BY THE DEPARTMENT

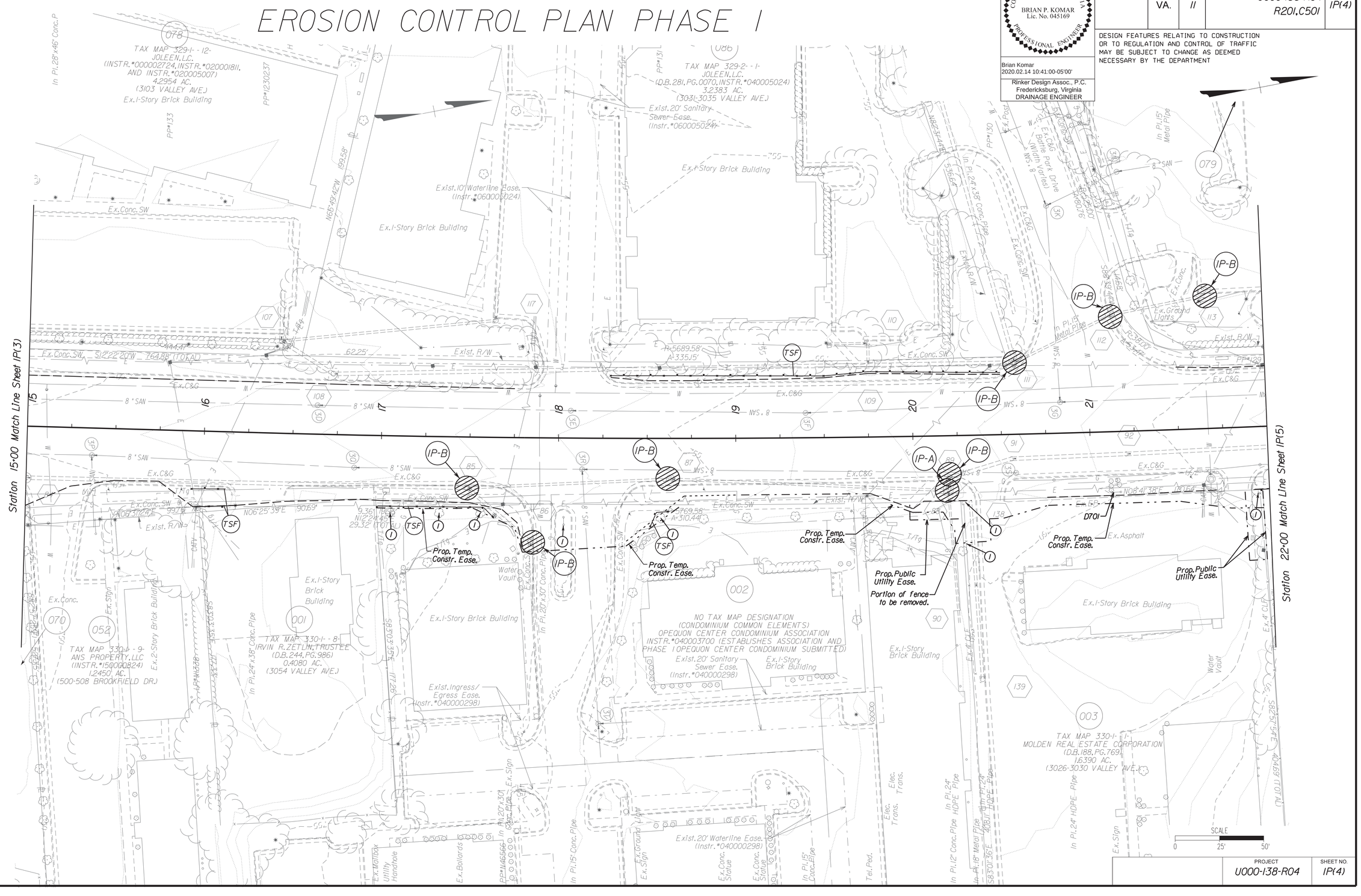

PROJECT	SHEET NO.
U000-138-R04	IP(4)

2/14/2020
9:03:16 AM

d1030130010p05.dgn
Plotted By: mbeales

PROJECT MANAGER Perry Eisenach, P.E. - City of Winchester (540) 667-2085
SURVEYED BY, DATE Sidney Thomas, L.S. - Rinker Design Associates (703) 368-7373, October 2014
DESIGN BY John A. Glomett, P.E. - Rinker Design Associates (703) 334-0060
SUBSURFACE UTILITY BY, DATE Matthew Bansiem - Mid Atlantic Utility Locating (703) 378-0100, August 2014

EROSION CONTROL PLAN PHASE I

COMMONWEALTH OF VIRGINIA
BRIAN P. KOMAR
Lic. No. 045169
PROFESSIONAL ENGINEER

Brian Komar
2020.02.14 10:40:40-05'00'

Rinker Design Assoc., P.C.
Fredericksburg, Virginia
DRAINAGE ENGINEER

REVISED	STATE	STATE ROUTE	STATE PROJECT	SHEET NO.
	VA.	11	U000-138-R04 R201,C501	IP(5)

DESIGN FEATURES RELATING TO CONSTRUCTION OR TO REGULATION AND CONTROL OF TRAFFIC MAY BE SUBJECT TO CHANGE AS DEEMED NECESSARY BY THE DEPARTMENT

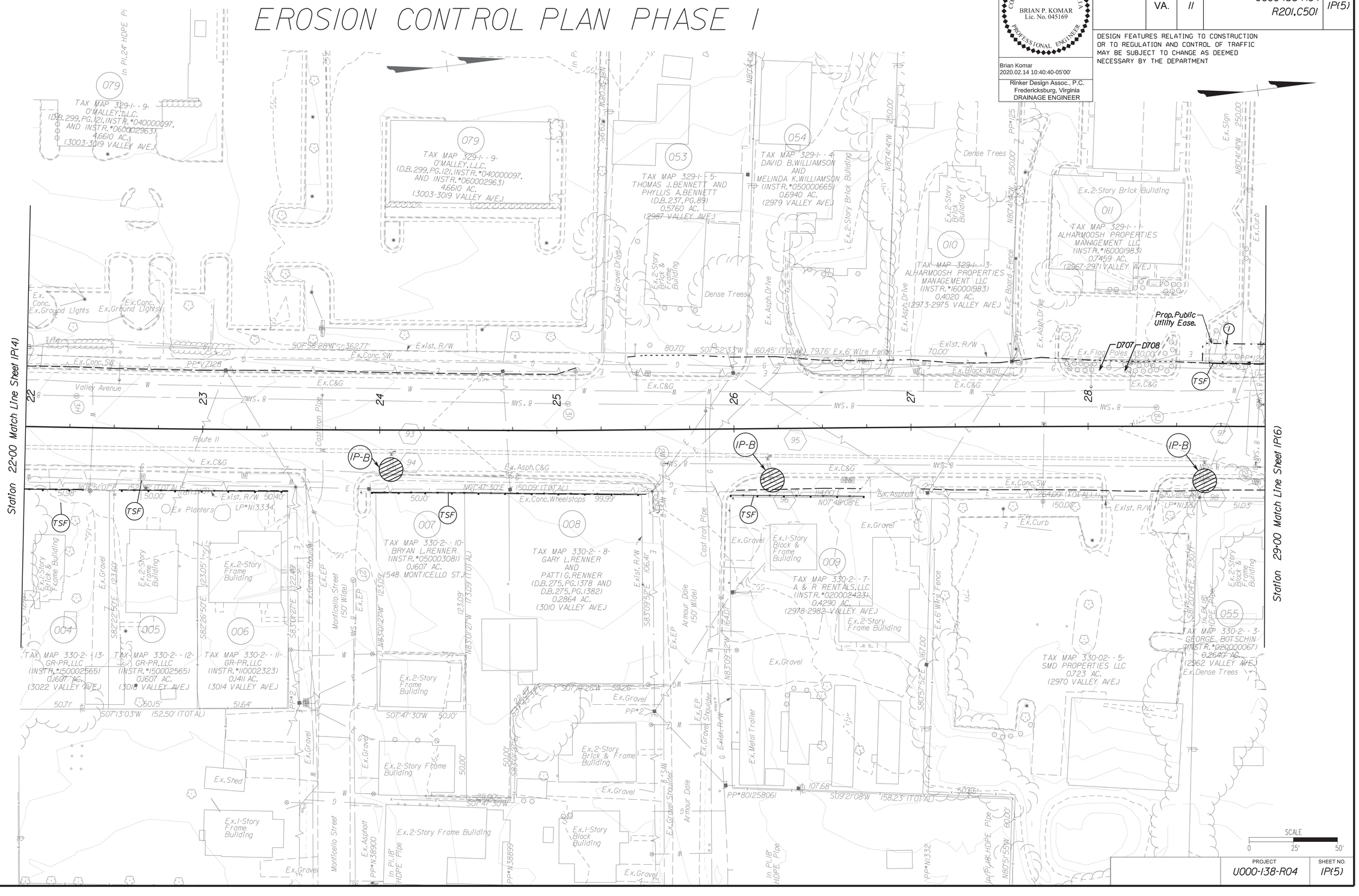

PROJECT	SHEET NO.
U000-138-R04	IP(5)

Rinker Design Associates, P.C.
Civil Engineering - Surveying - Environmental
Transportation - Land Development - Right of Way Services
Office Locations
Northern Virginia: 4670 Chain Bridge Road, Suite 100, Fairfax, VA 22030, Phone: (703) 334-0060, Fax: (703) 352-0243
Shenandoah Valley: 107 Kent Avenue, Suite 100, Winchester, VA 22601, Phone: (540) 667-2085, Fax: (540) 662-0210
Richmond: 4300 Dominion Boulevard, Suite 100, Glen Allen, VA 23060, Phone: (804) 262-8001, Fax: (804) 262-8009
www.rinkerdesign.com

2/14/2020
9:03:19 AM

d1030130011p061.dgn
Plotted By: mbeales

PROJECT MANAGER Perry Eisenach, P.E. - City of Winchester (540) 667-2085
SURVEYED BY, DATE Sidney Thomas, L.S. - Rinker Design Associates (703) 368-7373, October 2014
DESIGN BY John A. Glomelli, P.E. - Rinker Design Associates (703) 334-0060
SUBSURFACE UTILITY BY, DATE Matthew Bansiem - Mid Atlantic Utility Locating (703) 378-0100, August 2014

Rinker Design Associates, P.C.
Civil Engineering • Surveying • Environmental
Transportation • Land Development • Right of Way Services
SINCE ESTABLISHED IN 1978

Office Locations
Main Office
4651 Daly Drive, Suite 100
Chantilly, VA 20151
Phone: (703) 334-0060
Fax: (703) 222-0237

Winchester Office
107 N. Kent Street
Suite 203
Winchester, VA 22601
Phone: (540) 667-2085
Fax: (540) 667-2089

Fredericksburg Office
4300 Plank Road
Suite 100
Fredericksburg, VA 22407
Phone: (540) 373-8020
Fax: (540) 373-8021

EROSION CONTROL PLAN PHASE I

COMMONWEALTH OF VIRGINIA
BRIAN P. KOMAR
Lic. No. 045169
PROFESSIONAL ENGINEER

Brian Komar
2020.02.14 10:40:18-05'00'

Rinker Design Assoc., P.C.
Fredericksburg, Virginia
DRAINAGE ENGINEER

REVISED	STATE	STATE ROUTE	STATE PROJECT	SHEET NO.
	VA.	II	U000-138-R04 R201,C501	IP(6)

DESIGN FEATURES RELATING TO CONSTRUCTION OR TO REGULATION AND CONTROL OF TRAFFIC MAY BE SUBJECT TO CHANGE AS DEEMED NECESSARY BY THE DEPARTMENT

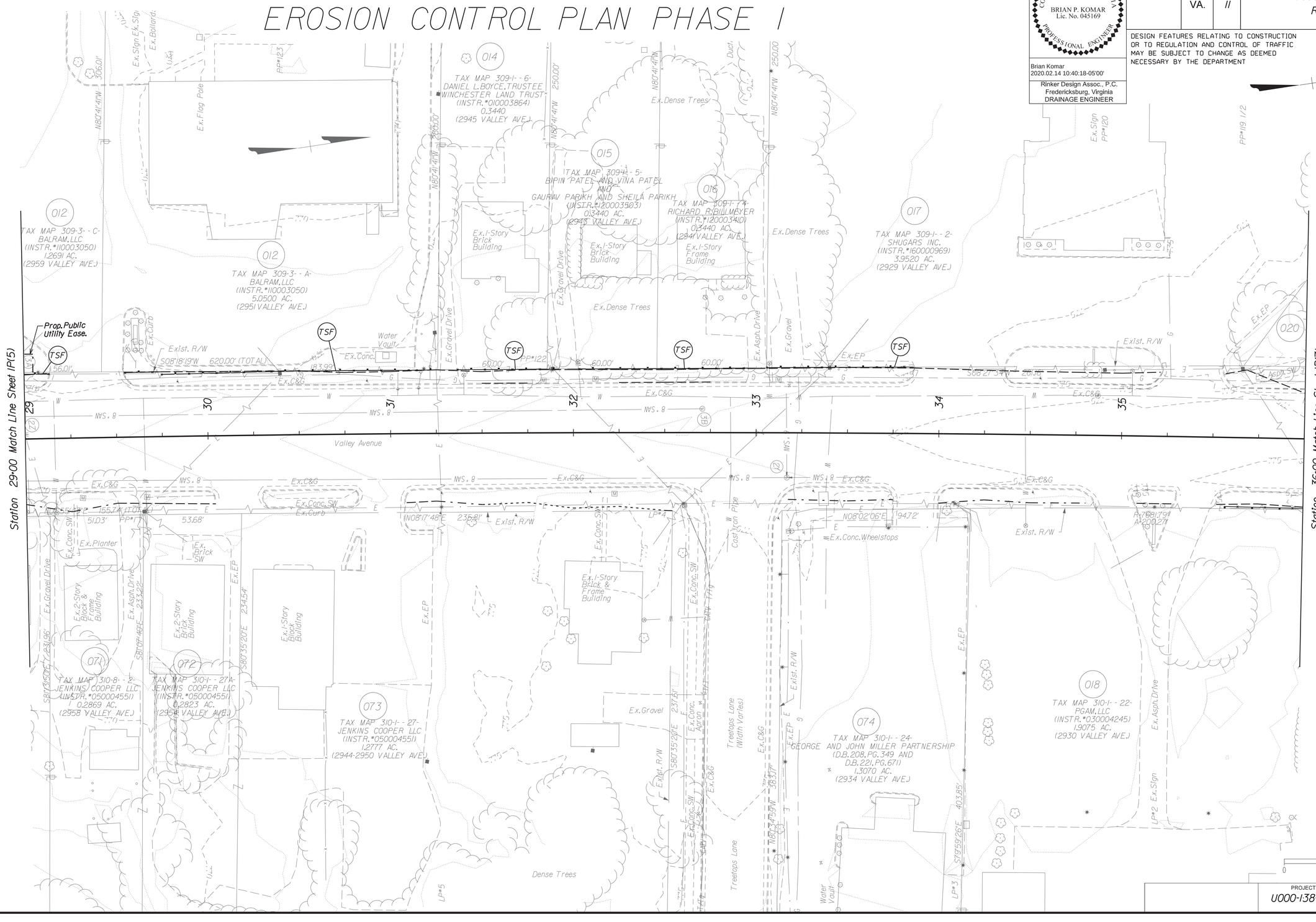

2/14/2020
9:03:21 AM

d1030130011p(07).dgn
Plotted By: mbeales

PROJECT MANAGER Perry Eisenach, P.E. - City of Winchester (540) 667-2085
SURVEYED BY, DATE Sidney Thomas, L.S. - Rinker Design Associates (703) 368-7373, October 2014
DESIGN BY John A. Glomelli, P.E. - Rinker Design Associates (703) 334-0060
SUBSURFACE UTILITY BY, DATE Matthew Bansiem - Mid Atlantic Utility Locating (703) 378-0100, August 2014

Rinker Design Associates, P.C.
Civil Engineering - Surveying - Environmental
Transportation - Land Development
Right of Way Services

Office Locations
Corporate Headquarters: 10211 Fredericksburg Road, Suite 110, Ashland, VA 23005, Phone: (804) 798-2999, Fax: (804) 798-2988
Northern Office: 4121 Wilson Boulevard, Suite 101, Arlington, VA 22203, Phone: (703) 334-0060, Fax: (703) 522-5180
Winchester Office: 107 N. Kent Street, Suite 203, Winchester, VA 22601, Phone: (540) 667-2085, Fax: (540) 667-2089

EROSION CONTROL PLAN PHASE I

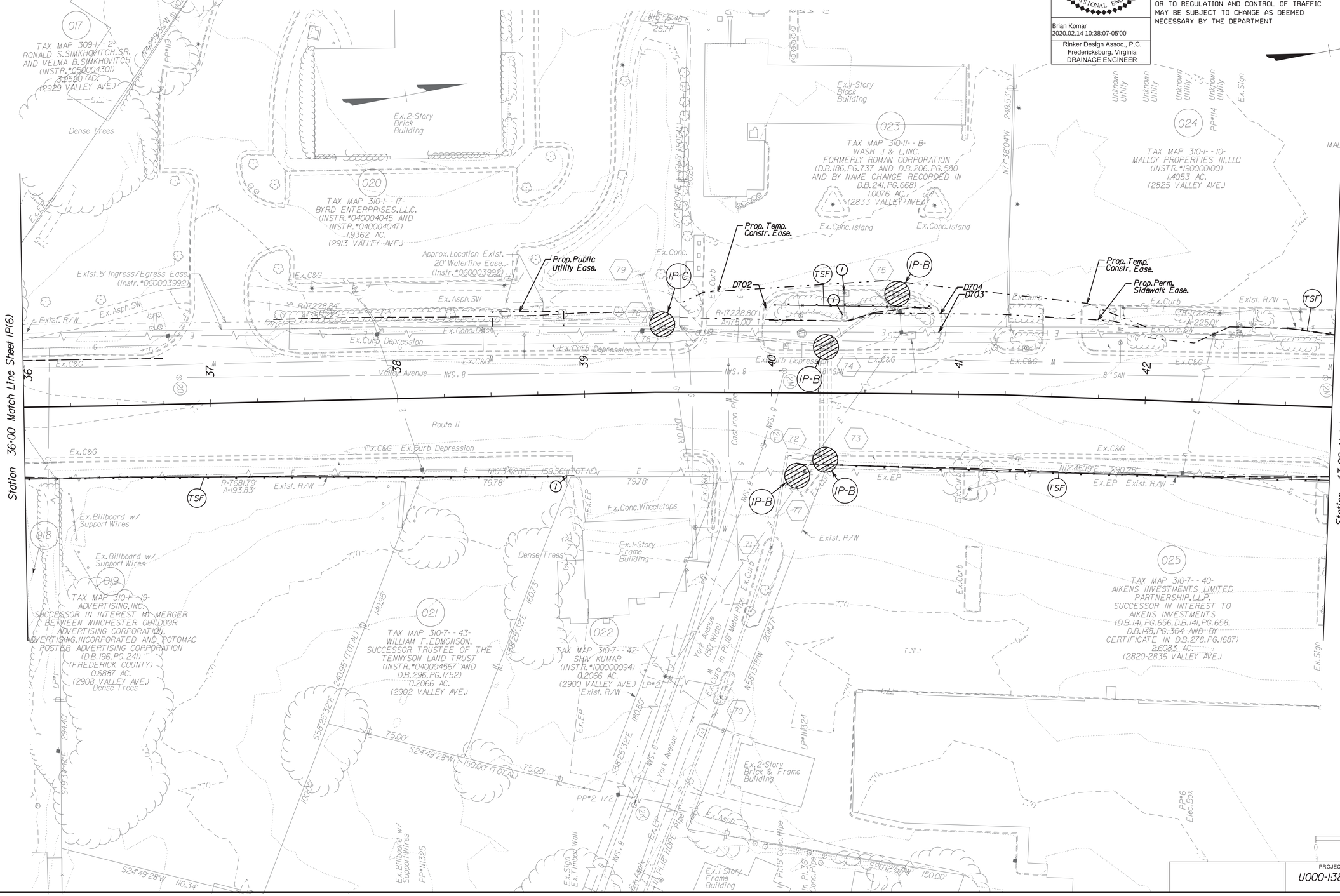

REVISED	STATE	ROUTE	PROJECT	SHEET NO.
	VA.	II	U000-138-R04 R201, C501	IP(7)

COMMONWEALTH OF VIRGINIA
BRIAN P. KOMAR
Lic. No. 045169
PROFESSIONAL ENGINEER

Brian Komar
2020.02.14 10:38:07-05'00'

Rinker Design Assoc., P.C.
Fredericksburg, Virginia
DRAINAGE ENGINEER

DESIGN FEATURES RELATING TO CONSTRUCTION OR TO REGULATION AND CONTROL OF TRAFFIC MAY BE SUBJECT TO CHANGE AS DEEMED NECESSARY BY THE DEPARTMENT

PROJECT	SHEET NO.
U000-138-R04	IP(7)

2/14/2020
9:03:24 AM

d1030130011p08l.dgn
Plotted By: mbeales

PROJECT MANAGER Perry Eisenach, P.E. - City of Winchester (540) 667-2085
SURVEYED BY, DATE Sidney Thomas, L.S. - Rinker Design Associates (703) 368-7373, October 2014
DESIGN BY John A. Glomelli, P.E. - Rinker Design Associates (703) 334-0060
SUBSURFACE UTILITY BY, DATE Matthew Bansiem - Mid Atlantic Utility Locating (703) 378-0100, August 2014

Office Locations
Corporate Headquarters: 207 Maple Avenue East, Suite 100, Vienna, VA 22180, Phone: (703) 334-0060, Fax: (703) 255-5508
Northern Virginia: 207 Maple Avenue East, Suite 100, Vienna, VA 22180, Phone: (703) 334-0060, Fax: (703) 255-5508
Southern Virginia: 1011 Boulevard, Suite 210, Chesapeake, VA 23320, Phone: (757) 436-8814, Fax: (757) 436-8821
Rinker Design Associates, P.C.
Civil Engineering • Surveying • Environmental
Transportation • Land Development
Right of Way Services
SERVING VIRGINIA SINCE 1988

EROSION CONTROL PLAN PHASE I

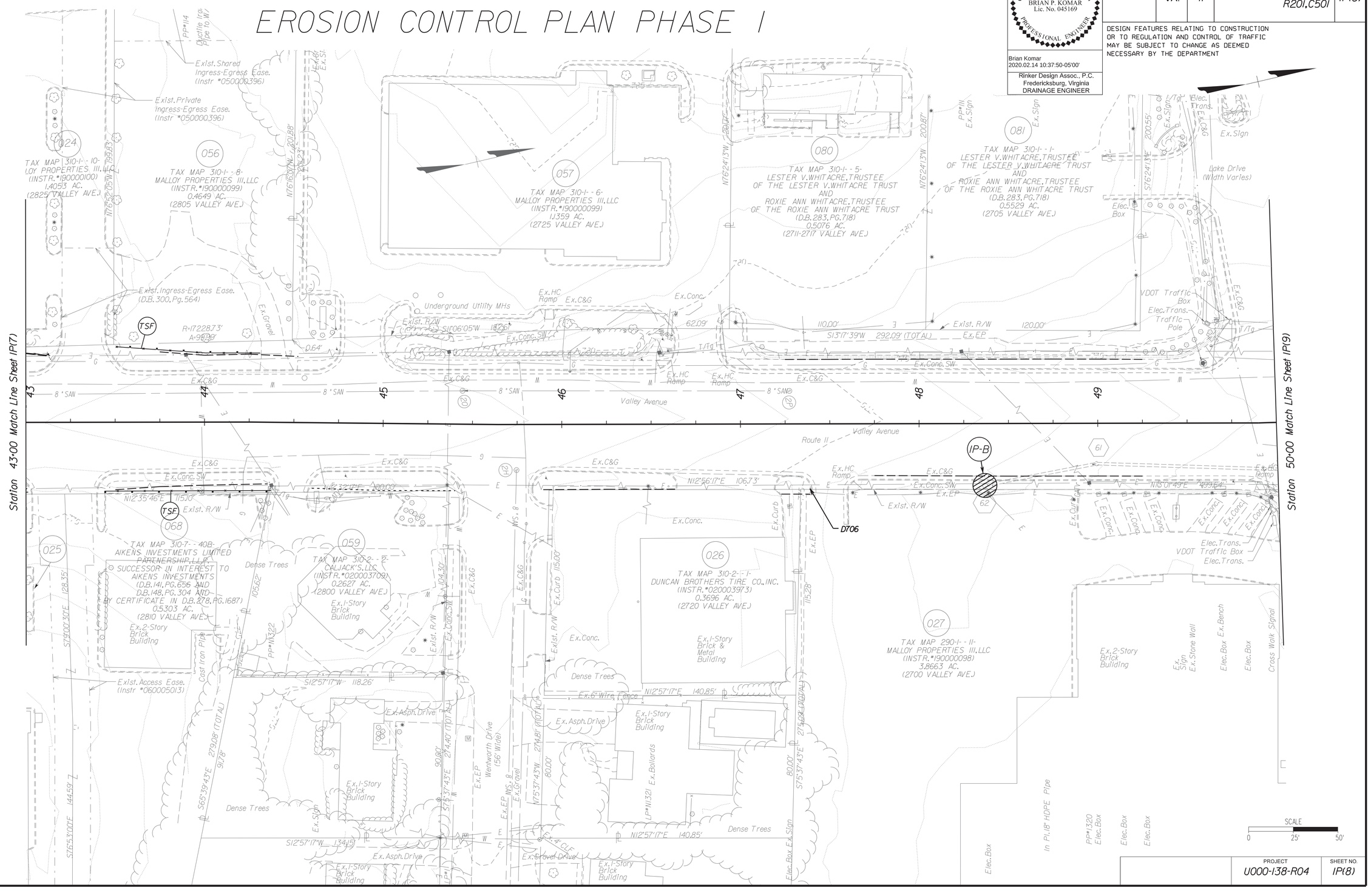

COMMONWEALTH OF VIRGINIA
BRIAN P. KOMAR
Lic. No. 045169
PROFESSIONAL ENGINEER

Brian Komar
2020.02.14 10:37:50-05'00'

Rinker Design Assoc., P.C.
Fredericksburg, Virginia
DRAINAGE ENGINEER

REVISED	STATE	ROUTE	PROJECT	SHEET NO.
	VA.	11	U000-138-R04 R201, C501	IP(8)

DESIGN FEATURES RELATING TO CONSTRUCTION OR TO REGULATION AND CONTROL OF TRAFFIC MAY BE SUBJECT TO CHANGE AS DEEMED NECESSARY BY THE DEPARTMENT

PROJECT	SHEET NO.
U000-138-R04	IP(8)

2/14/2020
9:03:26 AM

d1030130011p(09).dgn
Plotted By: mbeales

PROJECT MANAGER Perry Eisenach, P.E. - City of Winchester (540) 667-2085
SURVEYED BY, DATE Sidney Thomas, L.S. - Rinker Design Associates (703) 368-7373, October 2014
DESIGN BY John A. Glomett, P.E. - Rinker Design Associates (703) 334-0060
SUBSURFACE UTILITY BY, DATE Matthew Bansiem - Mid Atlantic Utility Locating (703) 378-0100, August 2014

Office Locations
Corporate Headquarters: 207 Mapp Drive, Suite 100, Sterling, VA 20167, Phone: (703) 334-0060, Fax: (703) 450-0000
Winchester Office: 207 Jackson Drive, Suite 100, Winchester, VA 22601, Phone: (540) 667-2085, Fax: (540) 662-0000
Rinker Design Associates, P.C.
Civil Engineering • Surveying • Environmental
Transportation • Land Development • Right of Way Services

EROSION CONTROL PLAN PHASE I

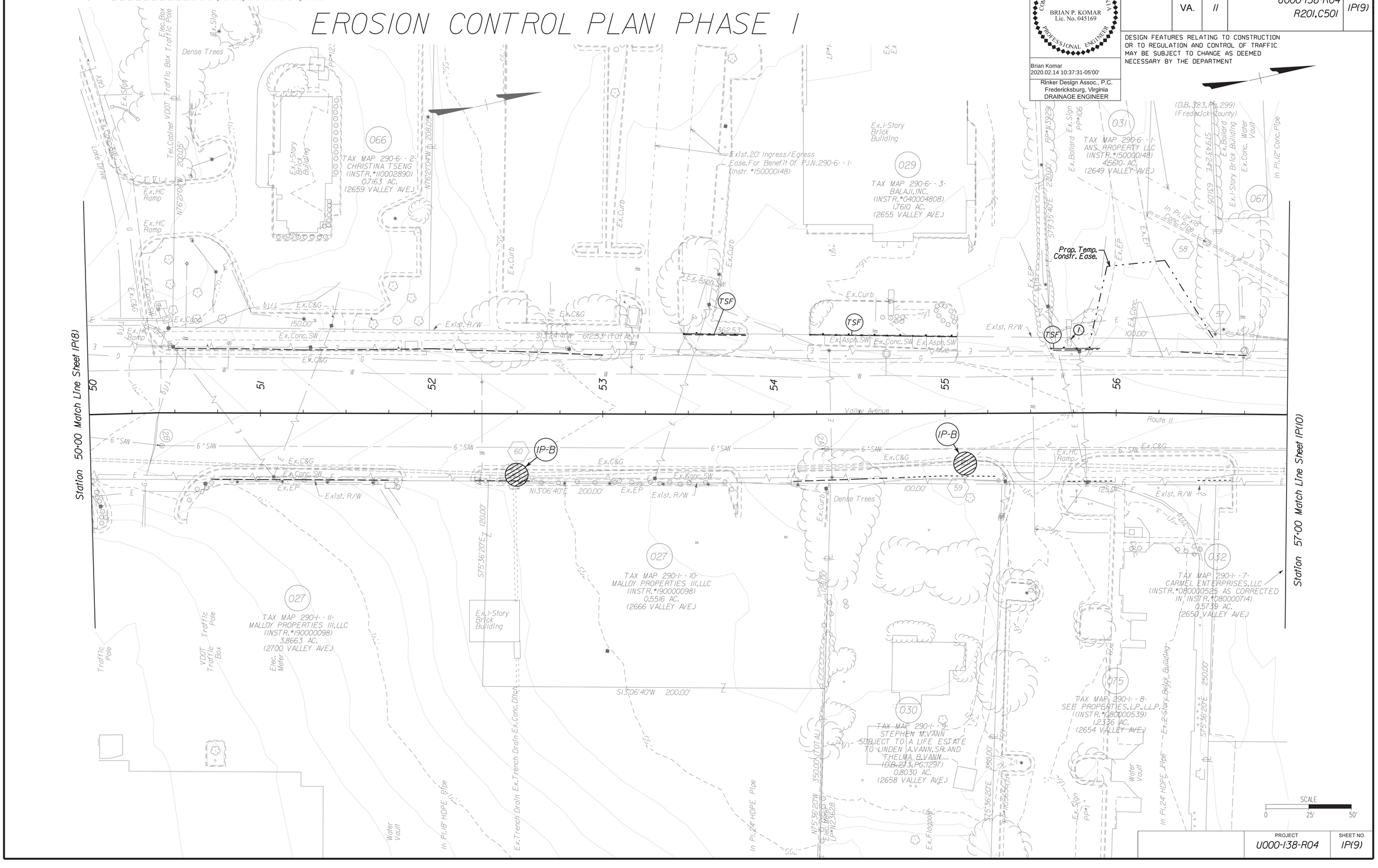

COMMONWEALTH OF VIRGINIA
BRIAN P. KOMAR
Lic. No. 045169
PROFESSIONAL ENGINEER

Brian Komar
2020.02.14 10:37:31-05'00'

Rinker Design Assoc., P.C.
Fredericksburg, Virginia
DRAINAGE ENGINEER

REVISED	STATE	STATE ROUTE	STATE PROJECT	SHEET NO.
	VA.	11	U000-138-R04 R201,C501	IP(9)

DESIGN FEATURES RELATING TO CONSTRUCTION OR TO REGULATION AND CONTROL OF TRAFFIC MAY BE SUBJECT TO CHANGE AS DEEMED NECESSARY BY THE DEPARTMENT

PROJECT	SHEET NO.
U000-138-R04	IP(9)

PROJECT MANAGER Perry Eisenach, P.E. - City of Winchester (540) 667-2085
SURVEYED BY, DATE Sidney Thomas, L.S. - Rinker Design Associates (703) 368-7373, October 2014
DESIGN BY John A. Glometti, P.E. - Rinker Design Associates (703) 334-0060
SUBSURFACE UTILITY BY, DATE Matthew Bansiem - Mid Atlantic Utility Locating (703) 378-0100, August 2014

Office Locations
Corporate Headquarters
8405 Greensboro Drive
Suite 100
McLean, VA 22102
Phone: (703) 334-0060
Fax: (703) 556-0371

417 Main Street
Fredericksburg, VA 22401
Phone: (540) 373-4030
Fax: (540) 373-4031

4101 Shaw Avenue Boulevard
Suite 101
Richmond, VA 23230
Phone: (804) 285-8600
Fax: (804) 285-8601

Rinker Design Associates, P.C.
Civil Engineering • Surveying • Environmental
Transportation • Land Development
Right-of-Way Services

EROSION CONTROL PLAN PHASE I

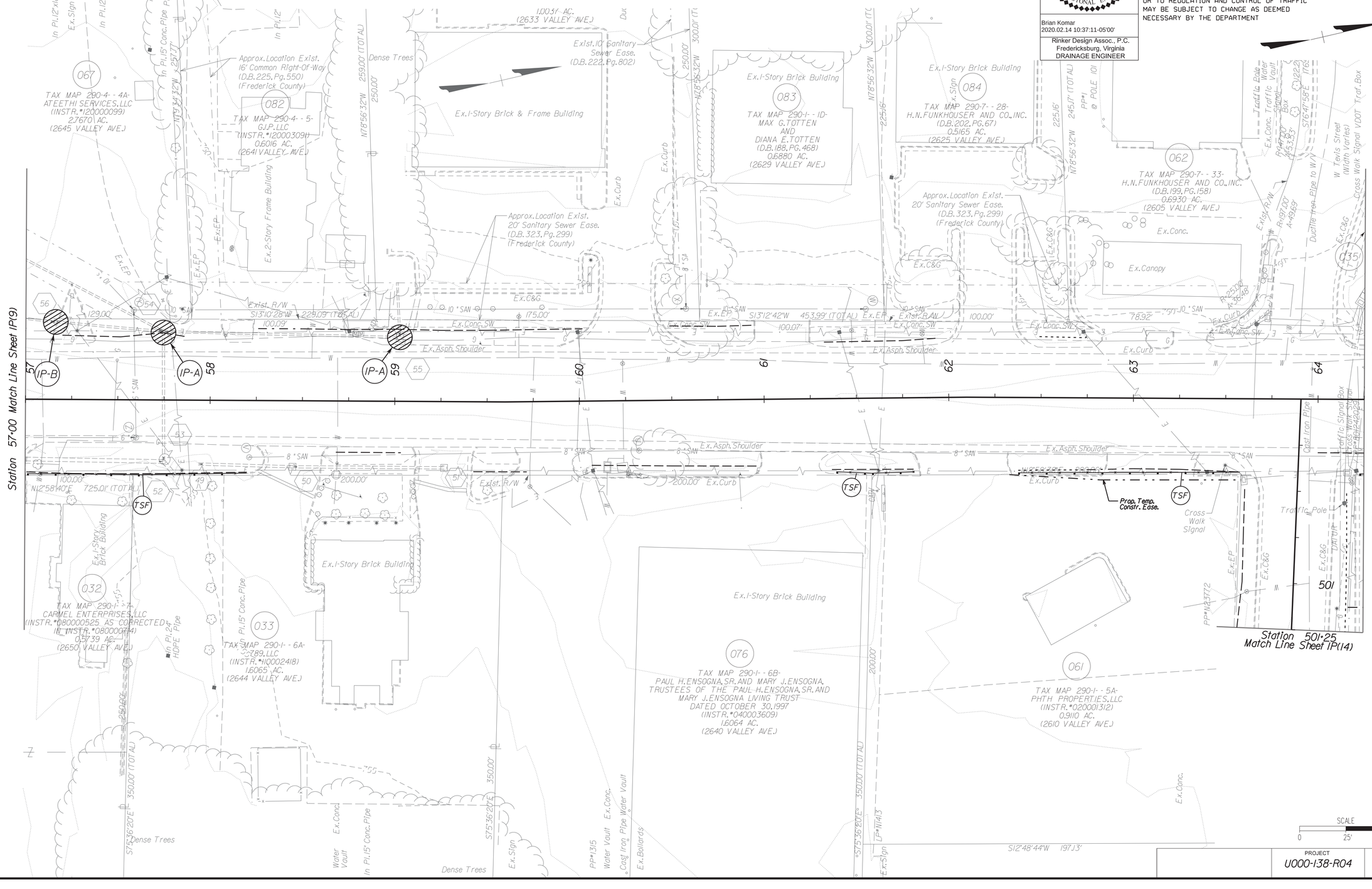

COMMONWEALTH OF VIRGINIA
BRIAN P. KOMAR
Lic. No. 045169
PROFESSIONAL ENGINEER

Brian Komar
2020.02.14 10:37:11-05'00'

Rinker Design Assoc., P.C.
Fredericksburg, Virginia
DRAINAGE ENGINEER

REVISED	STATE	ROUTE	PROJECT	SHEET NO.
	VA.	11	U000-138-R04 R201, C501	IP(10)

DESIGN FEATURES RELATING TO CONSTRUCTION OR TO REGULATION AND CONTROL OF TRAFFIC MAY BE SUBJECT TO CHANGE AS DEEMED NECESSARY BY THE DEPARTMENT

SCALE
0 25' 50'

PROJECT	SHEET NO.
U000-138-R04	IP(10)

2/14/2020
9:03:32 AM

d:\030\300\p(11).dgn
Plotted By: mbeales

PROJECT MANAGER Perry Eisenach, P.E. - City of Winchester (540) 667-2085
SURVEYED BY, DATE Sidney Thomas, L.S. - Rinker Design Associates (703) 368-7373, October 2014
DESIGN BY John A. Glomett, P.E. - Rinker Design Associates (703) 334-0060
SUBSURFACE UTILITY BY, DATE Matthew Ransom - Mid Atlantic Utility Locating (703) 378-0100, August 2014

EROSION CONTROL PLAN PHASE I

COMMONWEALTH OF VIRGINIA
BRIAN P. KOMAR
Lic. No. 045169
PROFESSIONAL ENGINEER

Brian Komar
2020.02.14 10:36:50-05'00'

Rinker Design Assoc., P.C.
Fredericksburg, Virginia
DRAINAGE ENGINEER

REVISED	STATE	STATE ROUTE	STATE PROJECT	SHEET NO.
	VA.	11	U000-138-R04 R201,C501	IP(11)

DESIGN FEATURES RELATING TO CONSTRUCTION OR TO REGULATION AND CONTROL OF TRAFFIC MAY BE SUBJECT TO CHANGE AS DEEMED NECESSARY BY THE DEPARTMENT

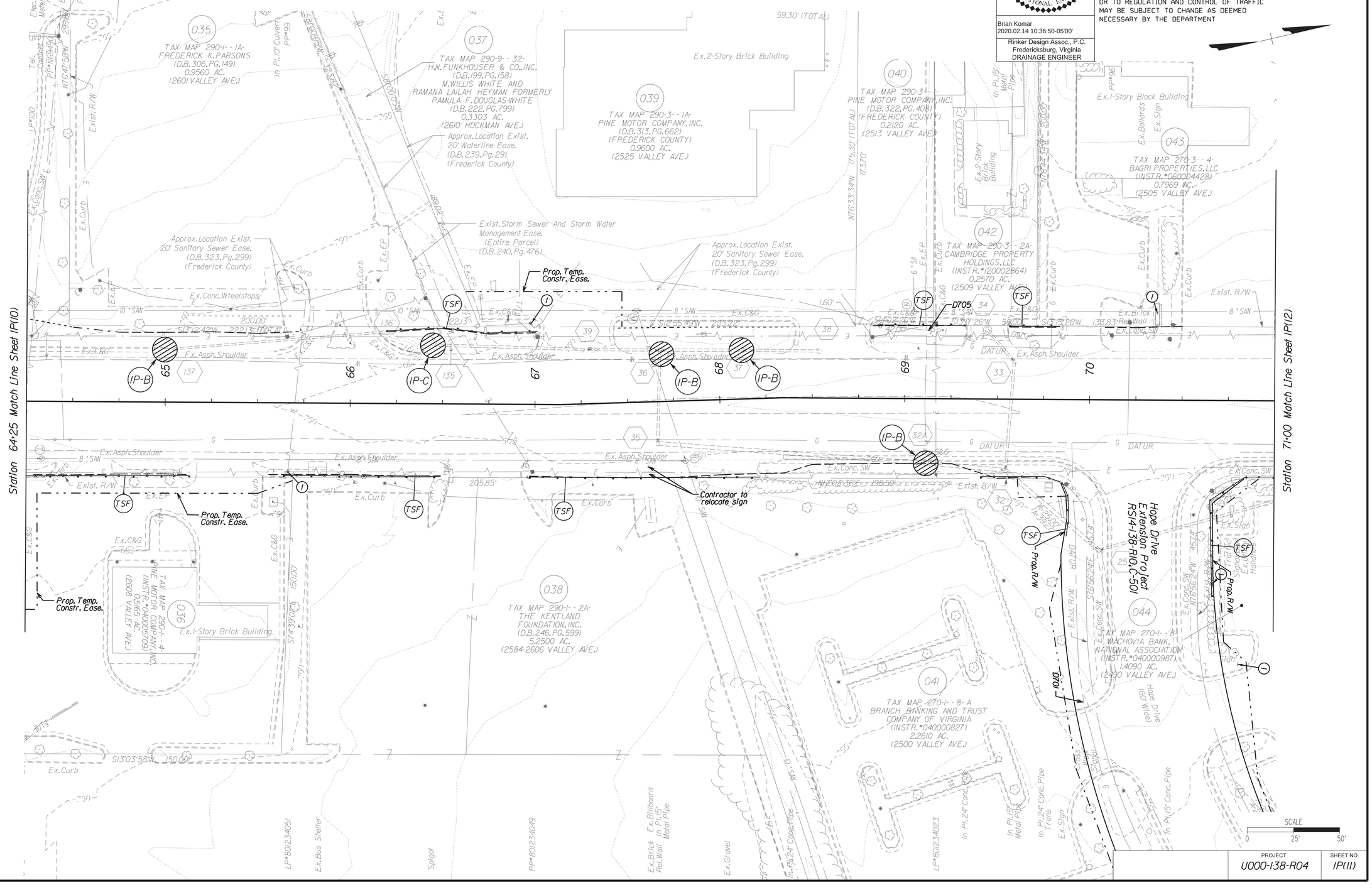

PROJECT	SHEET NO.
U000-138-R04	IP(11)

Rinker Design Associates, P.C.
Civil Engineering • Surveying • Environmental
Transportation • Land Development
Right of Way Services

Office Locations
Corporate Headquarters
Rinker Design Associates, P.C.
Suite 100, VA 22030
Phone: (703) 334-0060
Fax: (703) 352-0269

Fredericksburg Office
4101 Plank Lane Drive
Suite 100, VA 22407
Phone: (540) 667-2085
Fax: (540) 659-4217

Richmond Office
4101 Dominion Boulevard
Suite 100, VA 23060
Phone: (804) 346-8800
Fax: (804) 346-8801

2/14/2020
9:03:35 AM

d1030130010p1(12).dgn
Plotted By: mbeales

PROJECT MANAGER Perry Eisenach, P.E. - City of Winchester (540) 667-2085
SURVEYED BY, DATE Sidney Thomas, L.S. - Rinker Design Associates (703) 368-7373, October 2014
DESIGN BY John A. Glomelli, P.E. - Rinker Design Associates (703) 334-0060
SUBSURFACE UTILITY BY, DATE Matthew Banham - Mid Atlantic Utility Locating (703) 378-0100, August 2014

Rinker Design Associates, P.C.
Civil Engineering • Surveying • Environmental
Transportation • Land Development • Right of Way Services
SHOTTON VILLE, VA.

Office Locations
Shottonville, Virginia: 1000 Rinker Drive, Suite 100, Shottonville, VA 22911, Phone: (540) 943-2000, Fax: (540) 943-2001
Sterling, Virginia: 46101 Potomac Ridge Drive, Suite 100, Sterling, VA 20164, Phone: (703) 450-0060, Fax: (703) 450-0061
Fredericksburg, Virginia: 4101 Plank Road, Suite 100, Fredericksburg, VA 22407, Phone: (540) 373-4300, Fax: (540) 373-4301

EROSION CONTROL PLAN PHASE I

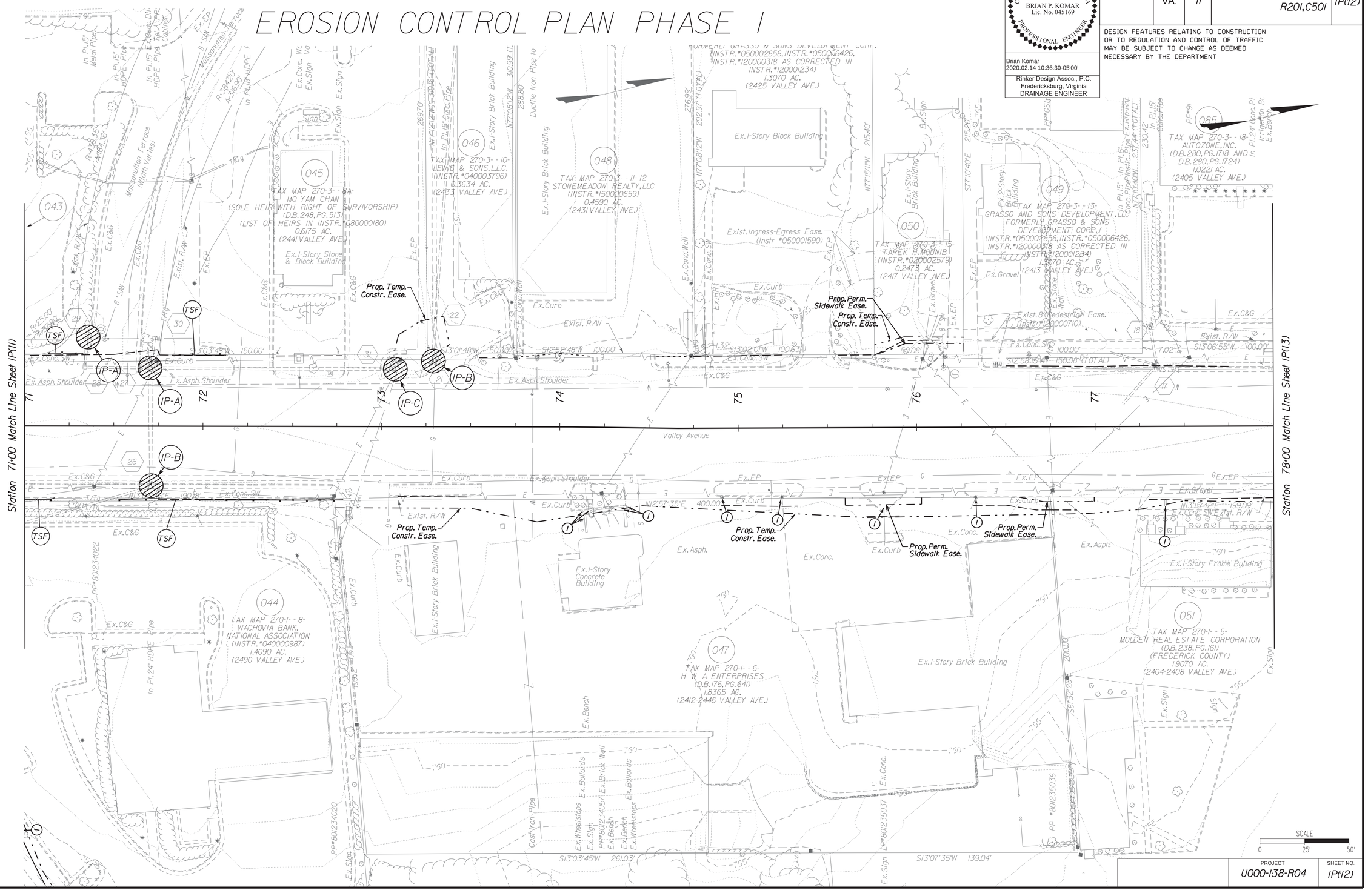

COMMONWEALTH OF VIRGINIA
BRIAN P. KOMAR
Lic. No. 045169
PROFESSIONAL ENGINEER

Brian Komar
2020.02.14 10:36:30-05'00'

Rinker Design Assoc., P.C.
Fredericksburg, Virginia
DRAINAGE ENGINEER

REVISED	STATE	STATE ROUTE	STATE PROJECT	SHEET NO.
	VA.	11	U000-138-R04 R201, C501	IP(12)

DESIGN FEATURES RELATING TO CONSTRUCTION OR TO REGULATION AND CONTROL OF TRAFFIC MAY BE SUBJECT TO CHANGE AS DEEMED NECESSARY BY THE DEPARTMENT

PROJECT	SHEET NO.
U000-138-R04	IP(12)

PROJECT MANAGER Perry Eisenach, P.E. - City of Winchester (540) 667-2085
SURVEYED BY, DATE Sidney Thomas, L.S. - Rinker Design Associates (703) 368-7373, October 2014
DESIGN BY John A. Glomelli, P.E. - Rinker Design Associates (703) 334-0060
SUBSURFACE UTILITY BY, DATE Matthew Ransom - Mid Atlantic Utility Locating (703) 378-0100, August 2014

Office Locations
Corporate Headquarters: 5101 Jefferson Davis Hwy. Suite 100, Richmond, VA 23234 Phone: (804) 231-2000 Fax: (804) 231-2001
Fredericksburg: 1400 Jefferson Davis Hwy. Suite 300, Fredericksburg, VA 22401 Phone: (540) 373-8000 Fax: (540) 373-8001
Winchester: 107 Kent Street, Suite 100, Winchester, VA 22601 Phone: (540) 667-2085 Fax: (540) 667-2086

Rinker Design Associates, P.C.
Civil Engineering • Surveying • Environmental
Transportation • Land Development
Right of Way Services

EROSION CONTROL PLAN PHASE I

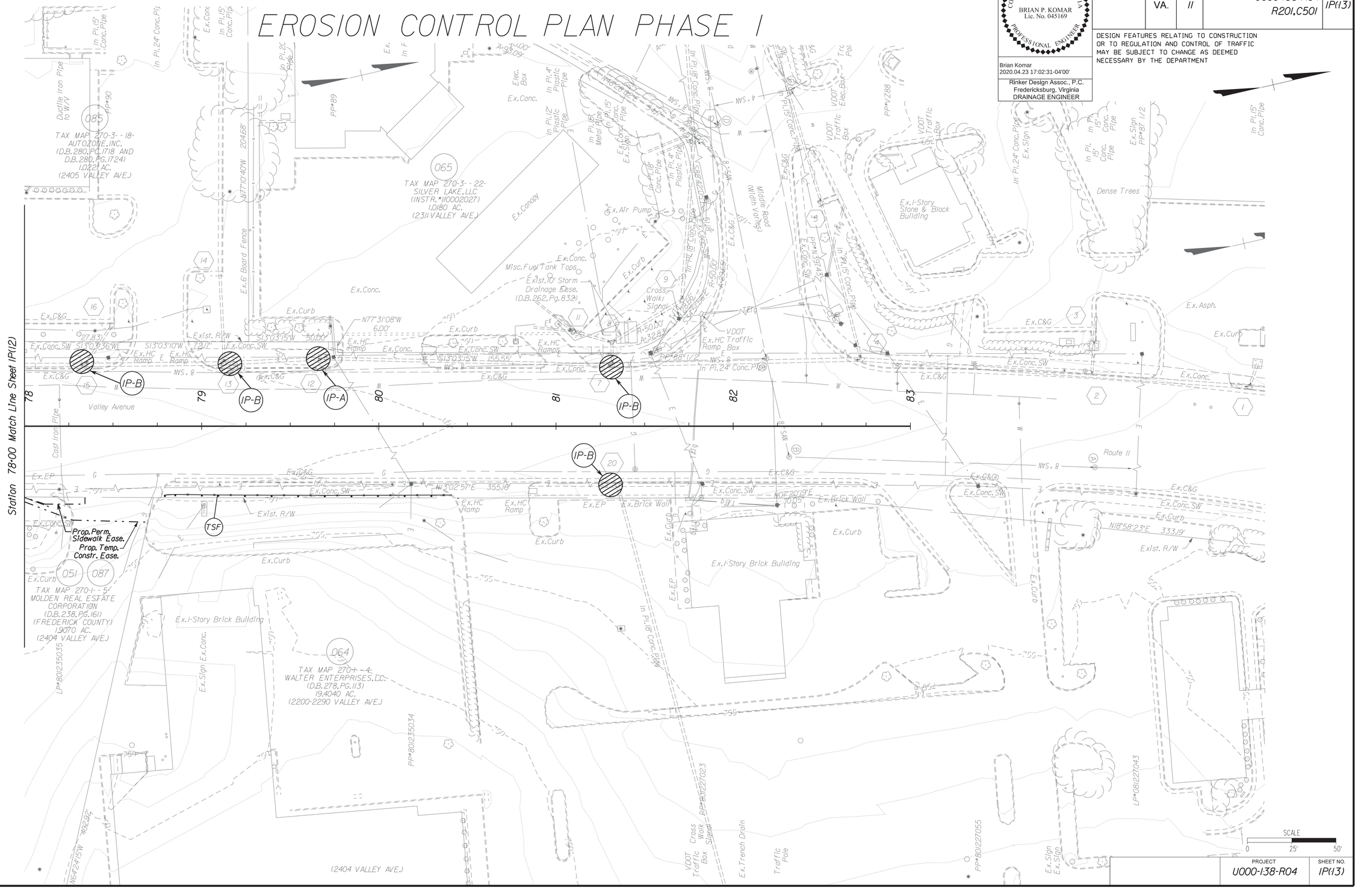

COMMONWEALTH OF VIRGINIA
BRIAN P. KOMAR
Lic. No. 045169
PROFESSIONAL ENGINEER

Brian Komar
2020.04.23 17:02:31-04'00'

Rinker Design Assoc., P.C.
Fredericksburg, Virginia
DRAINAGE ENGINEER

REVISED	STATE	ROUTE	PROJECT	SHEET NO.
	VA.	11	U000-138-R04 R201,C501	IP(13)

DESIGN FEATURES RELATING TO CONSTRUCTION OR TO REGULATION AND CONTROL OF TRAFFIC MAY BE SUBJECT TO CHANGE AS DEEMED NECESSARY BY THE DEPARTMENT

PROJECT	SHEET NO.
U000-138-R04	IP(13)

PROJECT MANAGER Perry Eisenach, P.E. - City of Winchester (540) 667-2085
SURVEYED BY, DATE Sidney Thomas, L.S. - Rinker Design Associates (703) 368-7373, October 2014
DESIGN BY John A. Glomett, P.E. - Rinker Design Associates (703) 334-0060
SUBSURFACE UTILITY BY, DATE Matthew Bansiem - Mid Atlantic Utility Locating (703) 378-0100, August 2014

EROSION CONTROL PLAN PHASE I

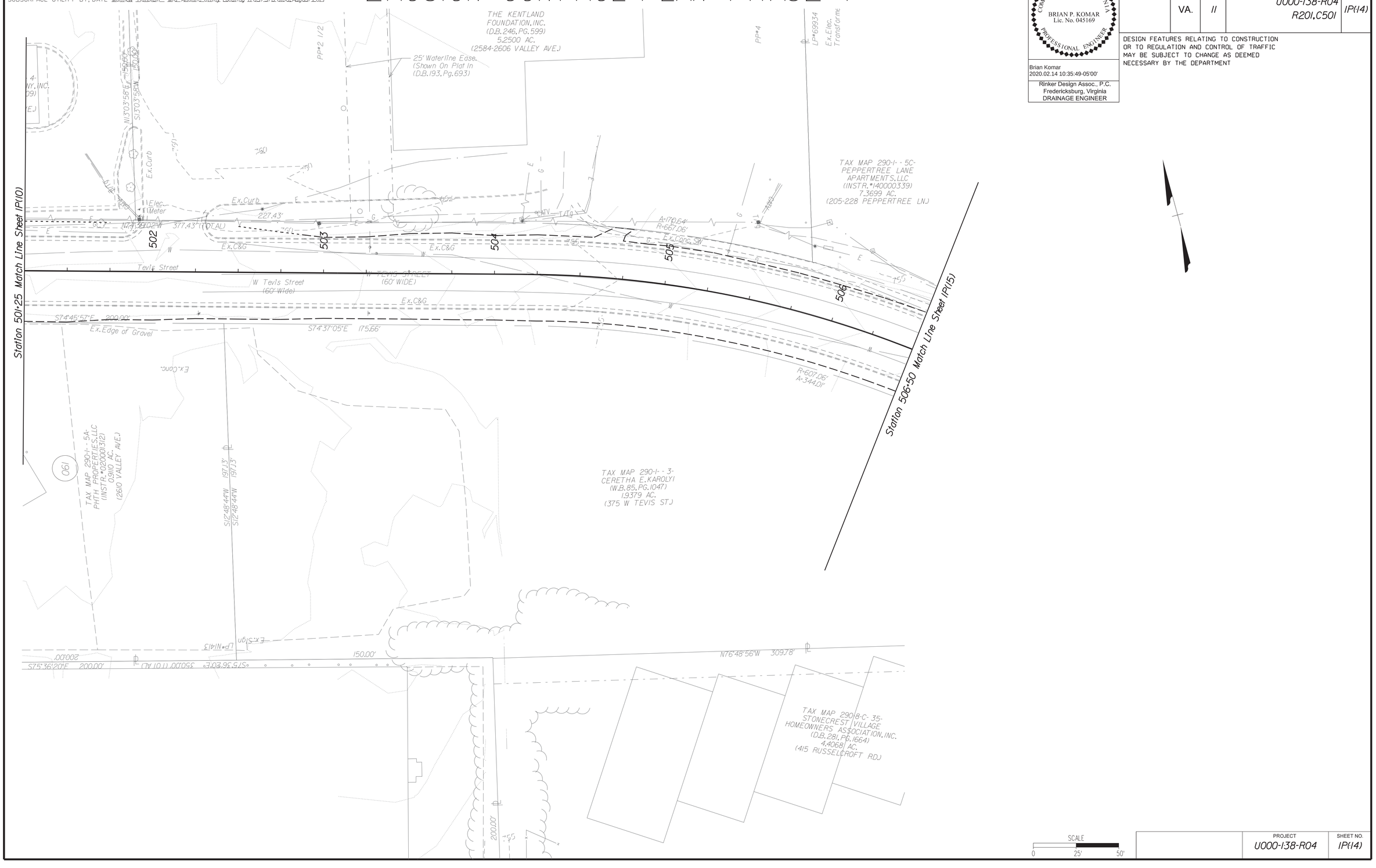

Office Locations
Corporate Headquarters: 8405 Colesville Road, Suite 100, Silver Spring, MD 20910, Phone: (301) 589-7260
Northern Virginia: 4401 Daisy Reid Avenue, Suite 100, Manassas, VA 20110, Phone: (703) 330-8400, Fax: (703) 330-8401
Fredericksburg: 2001 Mary Lycan Drive, Suite 101, Fredericksburg, VA 22407, Phone: (540) 373-4130, Fax: (540) 373-4131

Rinker Design Associates, P.C.
Civil Engineering • Surveying • Environmental
Transportation • Land Development
Right-of-Way Services
SERVING THE MID-ATLANTIC REGION

COMMONWEALTH OF VIRGINIA
BRIAN P. KOMAR
Lic. No. 045169
PROFESSIONAL ENGINEER

Brian Komar
2020.02.14 10:35:49-05'00'

Rinker Design Assoc., P.C.
Fredericksburg, Virginia
DRAINAGE ENGINEER

REVISED	STATE	STATE ROUTE	STATE PROJECT	SHEET NO.
	VA.	II	U000-138-R04 R201, C501	IP(14)

DESIGN FEATURES RELATING TO CONSTRUCTION OR TO REGULATION AND CONTROL OF TRAFFIC MAY BE SUBJECT TO CHANGE AS DEEMED NECESSARY BY THE DEPARTMENT

PROJECT	SHEET NO.
U000-138-R04	IP(14)

2/14/2020
9:03:43 AM

d1030130011p(15).dgn
Plotted By: mbeales

PROJECT MANAGER Perry Eisenach, P.E. - City of Winchester (540) 667-2085
SURVEYED BY, DATE Sidney Thomas, L.S. - Rinker Design Associates (703) 368-7373, October 2014
DESIGN BY John A. Glometti, P.E. - Rinker Design Associates (703) 334-0060
SUBSURFACE UTILITY BY, DATE Matthew Bansiem - Mid Atlantic Utility Locating (703) 378-0100, August 2014

Rinker Design Associates, P.C.
Civil Engineering - Surveying - Transportation
Environmental - Transportation - Right of Way Services
SHOTTON STREET
Office Locations
Corporate Headquarters: 4101 Dickerson Road, Suite 100, Baltimore, MD 21213, Phone: (410) 327-0700, Fax: (410) 327-0717
Northern Virginia: 4101 Dickerson Road, Suite 100, Baltimore, MD 21213, Phone: (410) 327-0700, Fax: (410) 327-0717
Fredericksburg: 4101 Dickerson Road, Suite 100, Baltimore, MD 21213, Phone: (410) 327-0700, Fax: (410) 327-0717

EROSION CONTROL PLAN PHASE I

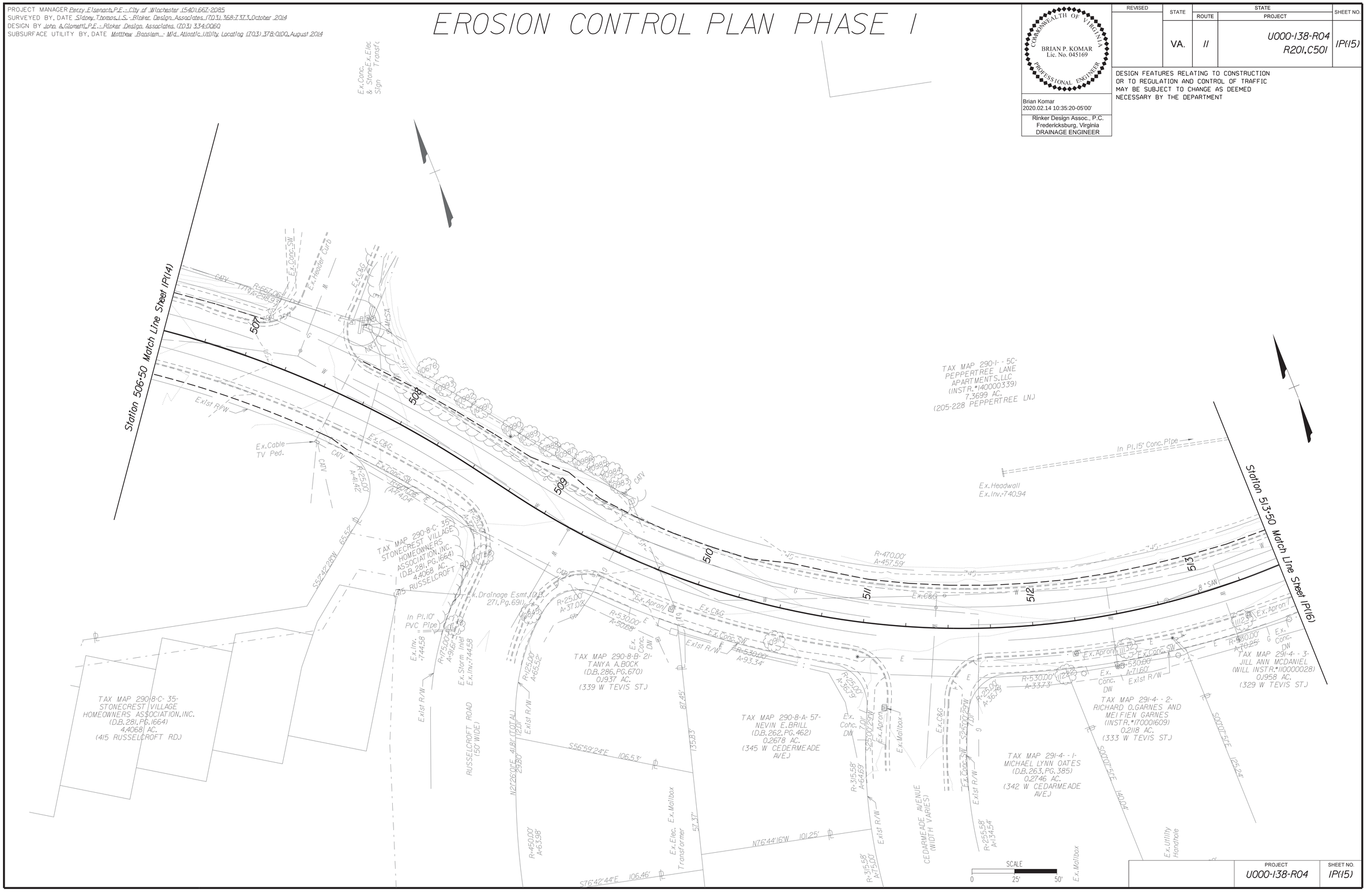

REVISED	STATE	STATE ROUTE	STATE PROJECT	SHEET NO.
	VA.	11	U000-138-R04 R201,C501	1P(15)

COMMONWEALTH OF VIRGINIA
BRIAN P. KOMAR
Lic. No. 045169
PROFESSIONAL ENGINEER

Brian Komar
2020.02.14 10:35:20-05'00'

Rinker Design Assoc., P.C.
Fredericksburg, Virginia
DRAINAGE ENGINEER

DESIGN FEATURES RELATING TO CONSTRUCTION OR TO REGULATION AND CONTROL OF TRAFFIC MAY BE SUBJECT TO CHANGE AS DEEMED NECESSARY BY THE DEPARTMENT

PROJECT	SHEET NO.
U000-138-R04	1P(15)

2/14/2020
9:03:46 AM

d10301300lp(16).dgn
Plotted By: mbeales

PROJECT MANAGER Perry Eisenach, P.E. - City of Winchester (540) 667-2085
SURVEYED BY, DATE Sidney Thomas, L.S. - Rinker Design Associates (703) 368-7373, October 2014
DESIGN BY John A. Glomelli, P.E. - Rinker Design Associates (703) 334-0060
SUBSURFACE UTILITY BY, DATE Matthew Bansiem - Mid Atlantic Utility Locating (703) 378-0100, August 2014

EROSION CONTROL PLAN PHASE I

COMMONWEALTH OF VIRGINIA
BRIAN P. KOMAR
Lic. No. 045169
PROFESSIONAL ENGINEER

Brian Komar
2020.02.14 10:34:59-05'00'

Rinker Design Assoc., P.C.
Fredericksburg, Virginia
DRAINAGE ENGINEER

REVISED	STATE	STATE ROUTE	STATE PROJECT	SHEET NO.
	VA.	11	U000-138-R04 R201,C501	1P(16)

DESIGN FEATURES RELATING TO CONSTRUCTION OR TO REGULATION AND CONTROL OF TRAFFIC MAY BE SUBJECT TO CHANGE AS DEEMED NECESSARY BY THE DEPARTMENT

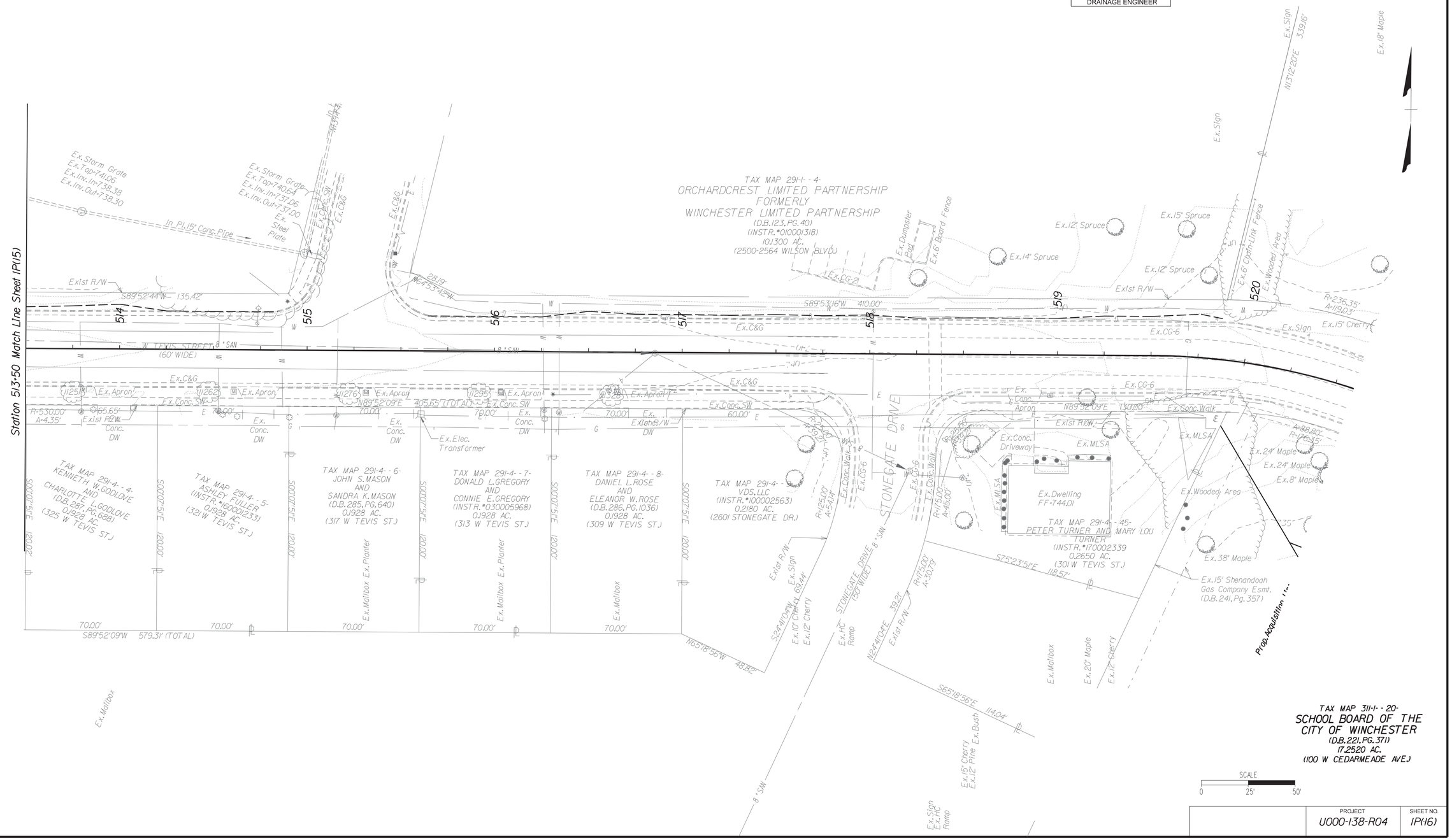

PROJECT	SHEET NO.
U000-138-R04	1P(16)

Rinker Design Associates, P.C.
Civil Engineering - Surveying - Land Planning
Transportation - Environmental
Right of Way Services
Office Locations
Corporate Headquarters: 4101 Dickerson Road, Suite 100, Baltimore, MD 21207, Phone: (410) 367-8000, Fax: (410) 367-8010
Fredericksburg, VA: 4101 Dickerson Road, Suite 100, Baltimore, MD 21207, Phone: (410) 367-8000, Fax: (410) 367-8010
Richmond, VA: 4101 Dickerson Road, Suite 100, Baltimore, MD 21207, Phone: (410) 367-8000, Fax: (410) 367-8010
Harrisonburg, VA: 4101 Dickerson Road, Suite 100, Baltimore, MD 21207, Phone: (410) 367-8000, Fax: (410) 367-8010

2/14/2020
9:03:49 AM

d1030130010103.dgn
Plotted By: mbeales

PROJECT MANAGER Perry Eisenach, P.E. - City of Winchester (540) 667-2085
SURVEYED BY, DATE Sidney Thomas, L.S. - Rinker Design Associates (703) 368-7373, October 2014
DESIGN BY John A. Glometti, P.E. - Rinker Design Associates (703) 334-0060
SUBSURFACE UTILITY BY, DATE Matthew Bansiem - Mid Atlantic Utility Locating (703) 378-0100, August 2014

Rinker Design Associates, P.C.
Civil Engineering • Surveying • Environmental
Transportation • Land Development • Right of Way Services
Office Locations
Main Office: 10711 Petworth Street, Suite 100, Manassas, VA 20110, Phone: (703) 334-0060, Fax: (703) 335-0089
Winchester Office: 107 N. Kent Street, Suite 101, Winchester, VA 22601, Phone: (540) 667-2085, Fax: (540) 667-0222
Fredericksburg Office: 2001 Princess Anne Street, Suite 100, Fredericksburg, VA 22401, Phone: (540) 373-8860, Fax: (540) 373-8479

EROSION CONTROL PLAN PHASE 2

COMMONWEALTH OF VIRGINIA
BRIAN P. KOMAR
Lic. No. 045169
PROFESSIONAL ENGINEER

Brian Komar
2020.02.14 10:34:35-05'00'

Rinker Design Assoc., P.C.
Fredericksburg, Virginia
DRAINAGE ENGINEER

REVISED	STATE	STATE ROUTE	STATE PROJECT	SHEET NO.
	VA.	11	U000-138-R04 R201,C501	10(3)

DESIGN FEATURES RELATING TO CONSTRUCTION OR TO REGULATION AND CONTROL OF TRAFFIC MAY BE SUBJECT TO CHANGE AS DEEMED NECESSARY BY THE DEPARTMENT

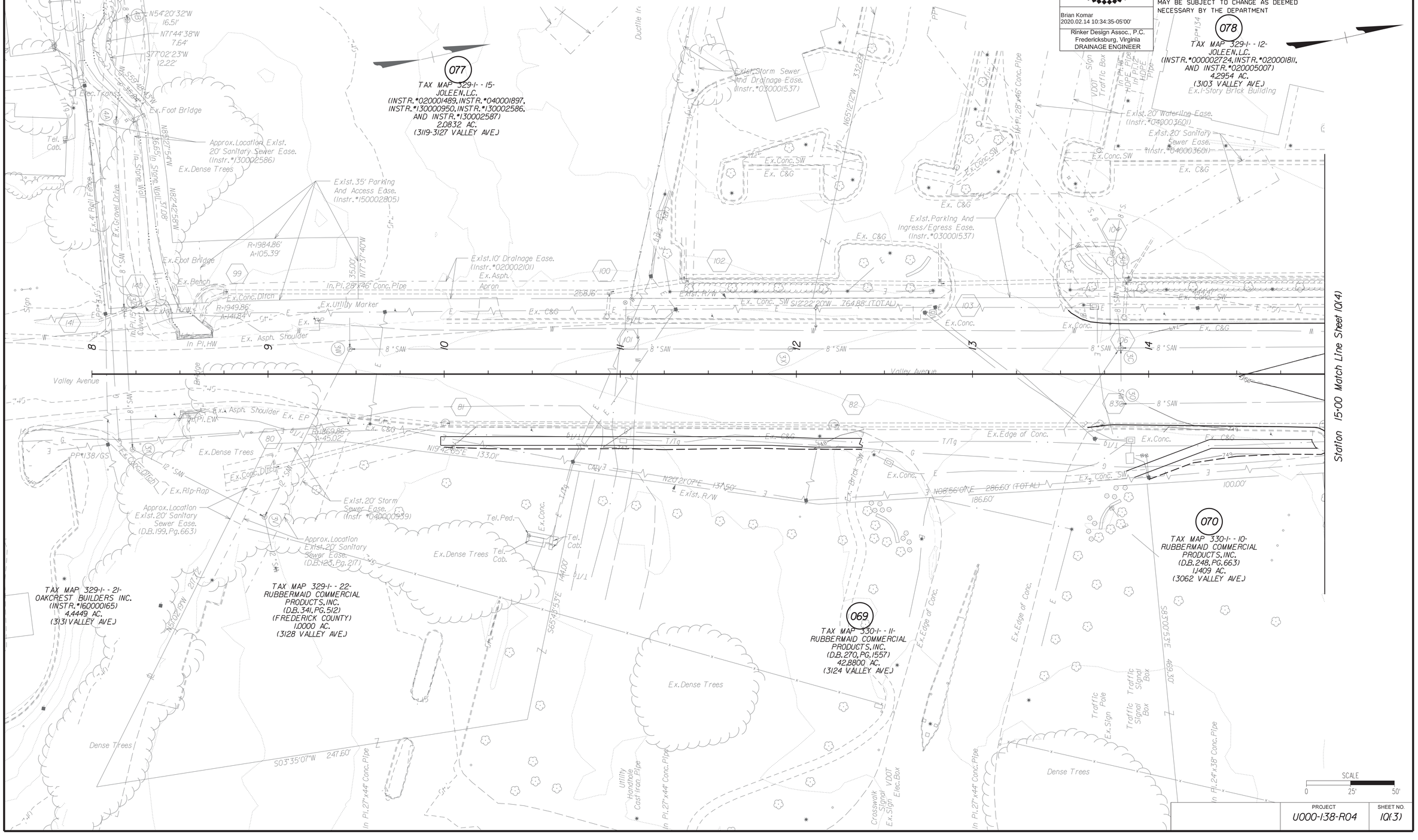

PROJECT	SHEET NO.
U000-138-R04	10(3)

2/14/2020
9:03:52 AM

d1030130010q04.dgn
Plotted By: mbeales

PROJECT MANAGER Perry Eisenach, P.E. - City of Winchester (540) 667-2085
SURVEYED BY, DATE Sidney Thomas, L.S. - Rinker Design Associates (703) 368-7373, October 2014
DESIGN BY John A. Glomett, P.E. - Rinker Design Associates (703) 334-0060
SUBSURFACE UTILITY BY, DATE Matthew Bansiem - Mid Atlantic Utility Locating (703) 378-0100, August 2014

Rinker Design Associates, P.C.
Civil Engineering • Surveying • Environmental
Transportation • Land Development • Right of Way Services
Office Locations
Main Office: 107 Mason Square, Suite 100, Lynchburg, VA 24501 Phone: (434) 846-3020 Fax: (434) 846-3022
107 Mason Square Boulevard, Suite 100, Lynchburg, VA 24501 Phone: (434) 846-3020 Fax: (434) 846-3022
4101 Dickens Road, Suite 100, Richmond, VA 23230 Phone: (804) 346-4415 Fax: (804) 346-8080

EROSION CONTROL PLAN PHASE 2

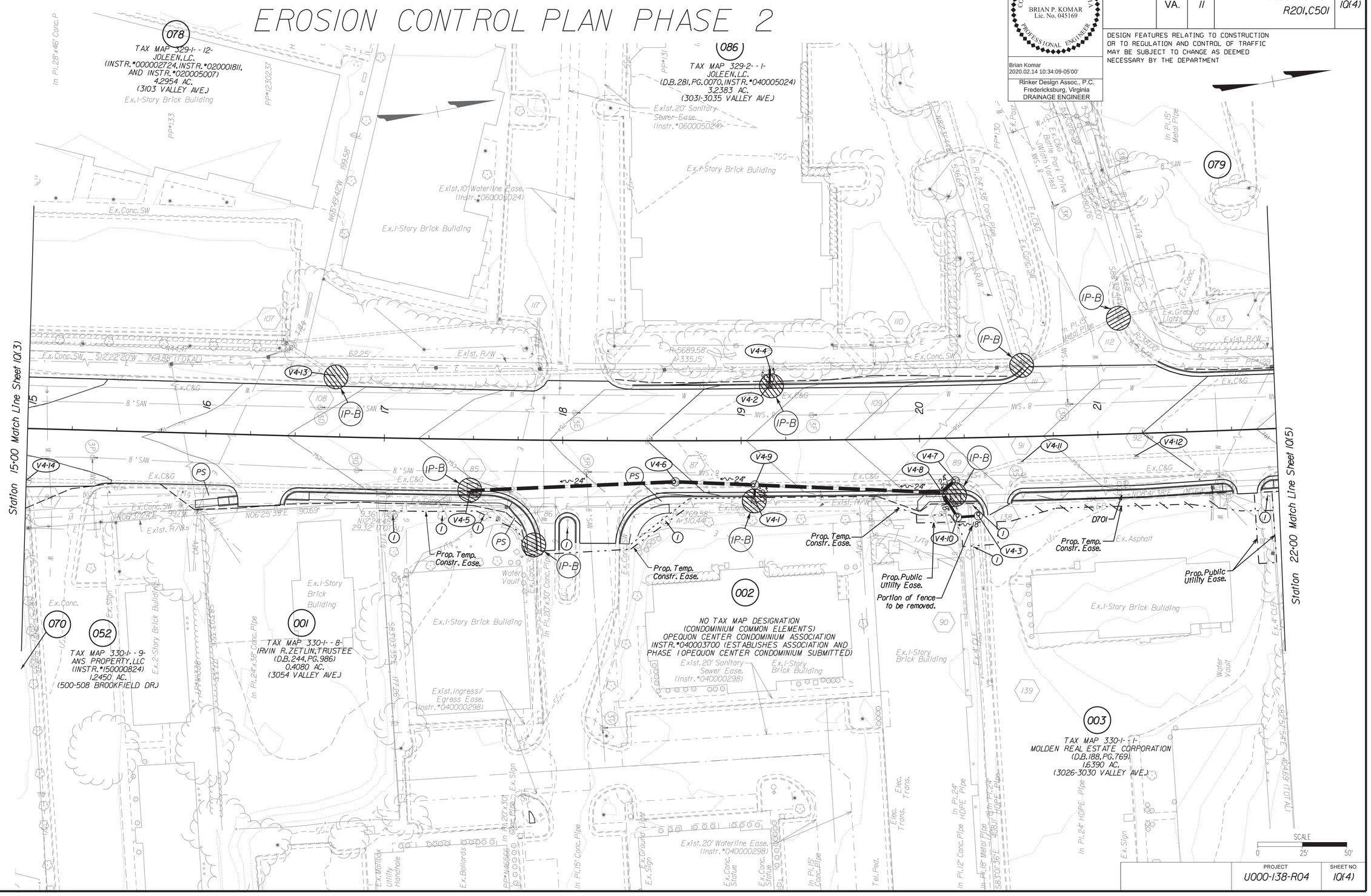

COMMONWEALTH OF VIRGINIA
BRIAN P. KOMAR
Lic. No. 045169
PROFESSIONAL ENGINEER

Brian Komar
2020.02.14 10:34:09-05'00'
Rinker Design Assoc., P.C.
Fredericksburg, Virginia
DRAINAGE ENGINEER

REVISED	STATE	STATE ROUTE	STATE PROJECT	SHEET NO.
	VA.	11	U000-138-R04 R201, C501	10(4)

DESIGN FEATURES RELATING TO CONSTRUCTION OR TO REGULATION AND CONTROL OF TRAFFIC MAY BE SUBJECT TO CHANGE AS DEEMED NECESSARY BY THE DEPARTMENT

PROJECT	SHEET NO.
U000-138-R04	10(4)

2/14/2020
9:03:55 AM

d1030130010q05.dgn
Plotted By: mbeales

PROJECT MANAGER Perry Eisenach, P.E. - City of Winchester (540) 667-2085
SURVEYED BY, DATE Sidney Thomas, L.S. - Rinker Design Associates (703) 368-7373, October 2014
DESIGN BY John A. Glomett, P.E. - Rinker Design Associates (703) 334-0060
SUBSURFACE UTILITY BY, DATE Matthew Bansiem - Mid Atlantic Utility Locating (703) 378-0100, August 2014

EROSION CONTROL PLAN PHASE 2

COMMONWEALTH OF VIRGINIA
BRIAN P. KOMAR
Lic. No. 045169
PROFESSIONAL ENGINEER

Brian Komar
2020.02.14 10:33:07-05'00'

Rinker Design Assoc., P.C.
Fredericksburg, Virginia
DRAINAGE ENGINEER

REVISED	STATE	STATE ROUTE	STATE PROJECT	SHEET NO.
	VA.	11	U000-138-R04 R201,C501	10(5)

DESIGN FEATURES RELATING TO CONSTRUCTION OR TO REGULATION AND CONTROL OF TRAFFIC MAY BE SUBJECT TO CHANGE AS DEEMED NECESSARY BY THE DEPARTMENT

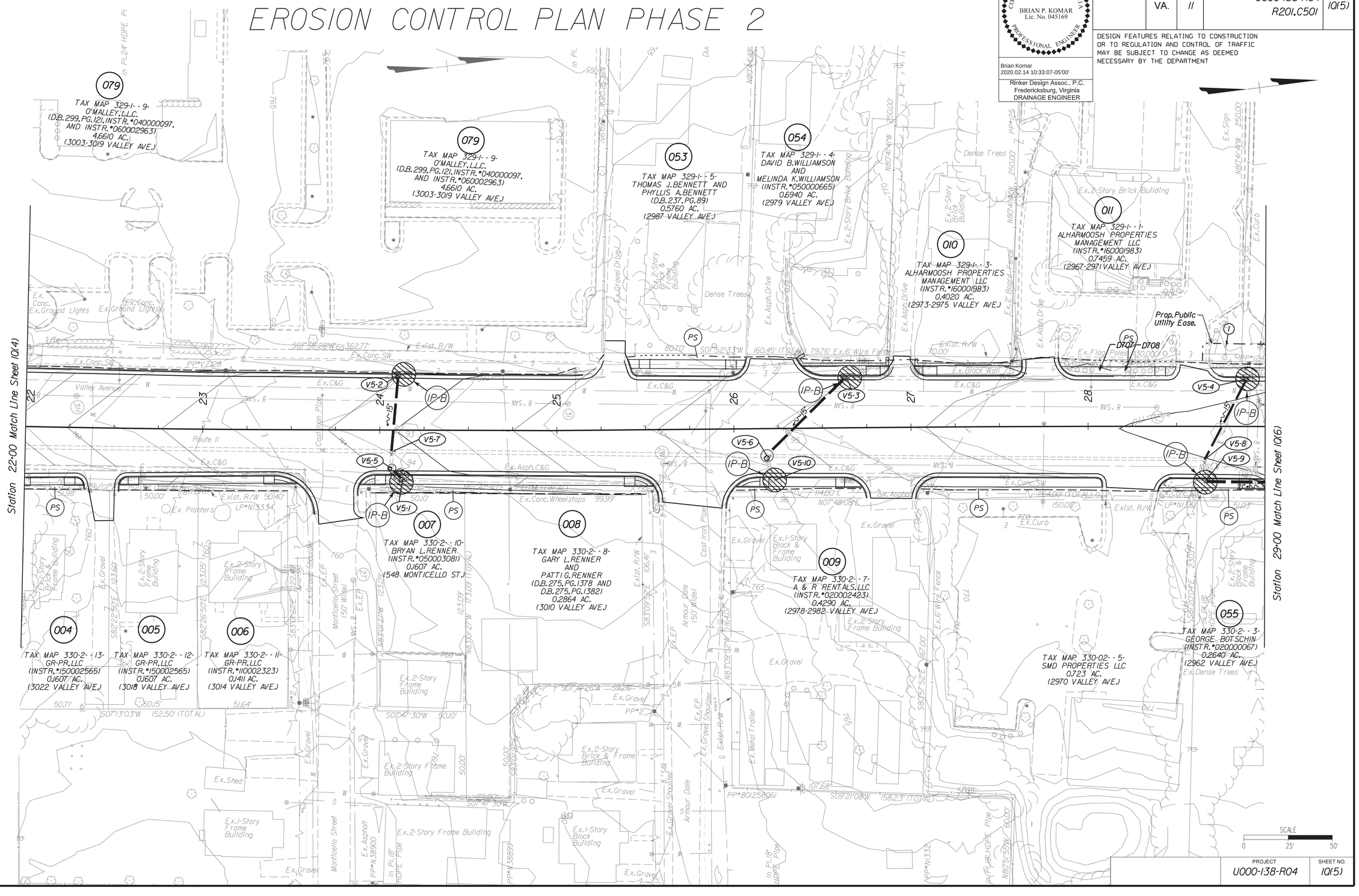

PROJECT	SHEET NO.
U000-138-R04	10(5)

Rinker Design Associates, P.C.
Civil Engineering - Surveying - Environmental
Transportation - Land Development
Right of Way Services
SINCE 1989 WE WORK

Office Locations
Fredericksburg, Virginia
Rinker Design Associates, P.C.
Fax: (540) 373-0549

Sterling, Virginia
Rinker Design Associates, P.C.
Fax: (703) 450-5060

Richmond, Virginia
Rinker Design Associates, P.C.
Fax: (804) 323-0000

2/14/2020
9:03:58 AM

d:\0301300\q(06).dgn
Plotted By: mbeales

PROJECT MANAGER Perry Eisenach, P.E. - City of Winchester (540) 667-2085
SURVEYED BY, DATE Sidney Thomas, L.S. - Rinker Design Associates (703) 368-7373, October 2014
DESIGN BY John A. Glomett, P.E. - Rinker Design Associates (703) 334-0060
SUBSURFACE UTILITY BY, DATE Matthew Bansiem - Mid Atlantic Utility Locating (703) 378-0100, August 2014

Rinker Design Associates, P.C.
Civil Engineering • Surveying • Environmental
Transportation • Land Development • Right of Way Services

Office Locations
Main Office
4651 Daly Drive, Suite 100
Chantilly, VA 20151
Phone: (703) 334-0060
Fax: (703) 222-0237

Winchester Office
107 N. Kent Street
Suite 101
Winchester, VA 22601
Phone: (540) 667-2085
Fax: (540) 667-2089

Richmond Office
4914 Fitzhugh Avenue
Suite 100
Richmond, VA 23230
Phone: (804) 355-0800
Fax: (804) 355-0801

107 N. Kent Street
Suite 101
Winchester, VA 22601
Phone: (540) 667-2085
Fax: (540) 667-2089

REVISED	STATE	ROUTE	PROJECT	SHEET NO.
	VA.	11	U000-138-R04 R201,C501	10(6)

COMMONWEALTH OF VIRGINIA
BRIAN P. KOMAR
Lic. No. 045169
PROFESSIONAL ENGINEER

Brian Komar
2020.02.14 10:45:32-05'00'

Rinker Design Assoc., P.C.
Fredericksburg, Virginia
DRAINAGE ENGINEER

DESIGN FEATURES RELATING TO CONSTRUCTION OR TO REGULATION AND CONTROL OF TRAFFIC MAY BE SUBJECT TO CHANGE AS DEEMED NECESSARY BY THE DEPARTMENT

EROSION CONTROL PLAN PHASE 2

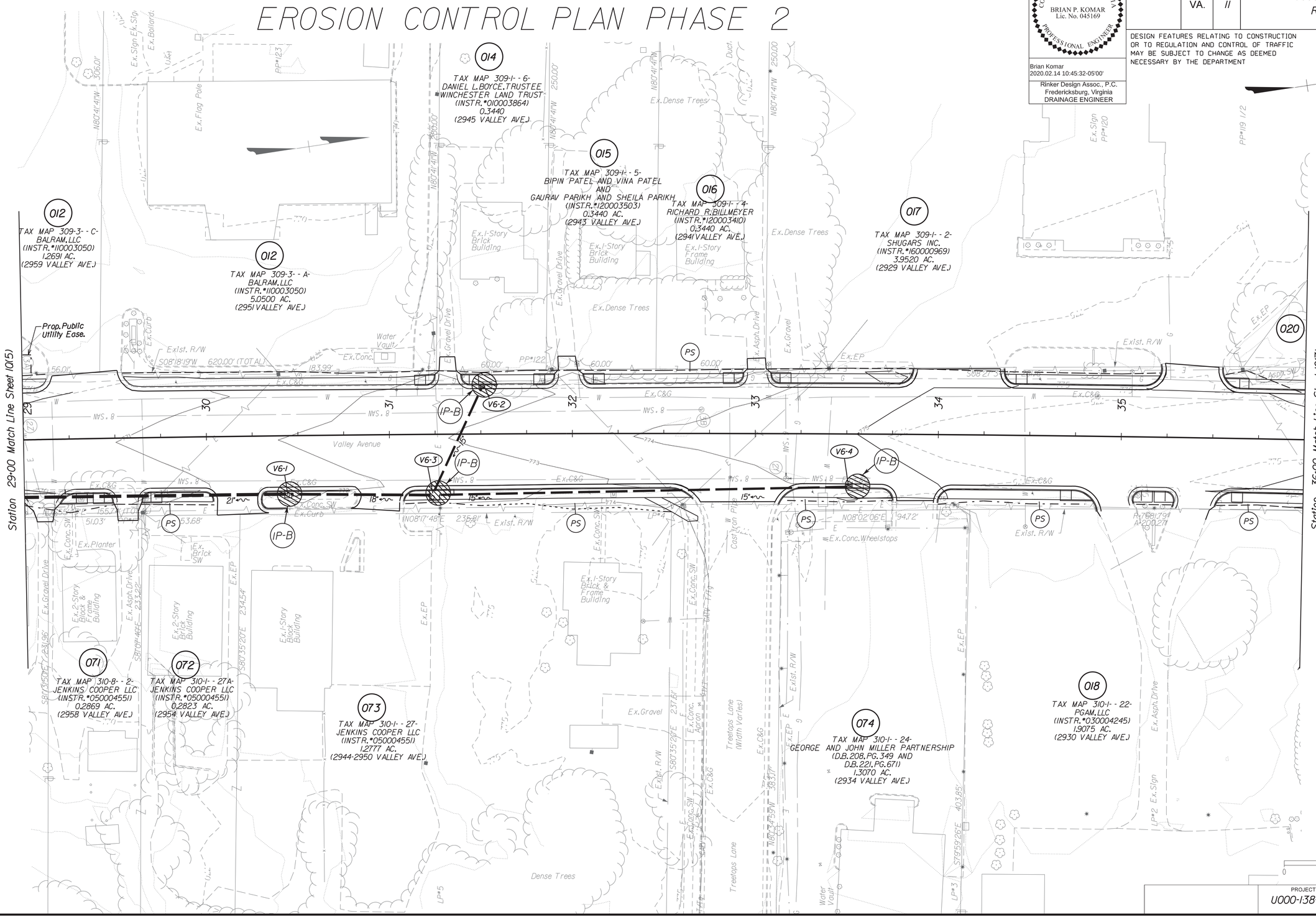

PROJECT	SHEET NO.
U000-138-R04	10(6)

2/14/2020
9:04:01 AM

d1030130010q(07).dgn
Plotted By: mbeales

PROJECT MANAGER Perry Eisenach, P.E. - City of Winchester (540) 667-2085
SURVEYED BY, DATE Sidney Thomas, L.S. - Rinker Design Associates (703) 368-7373, October 2014
DESIGN BY John A. Glomelli, P.E. - Rinker Design Associates (703) 334-0060
SUBSURFACE UTILITY BY, DATE Matthew Bansiem - Mid Atlantic Utility Locating (703) 378-0100, August 2014

Rinker Design Associates, P.C.
Civil Engineering - Surveying - Environmental
Transportation - Land Development
Right of Way Services
Office Locations
Corporate Headquarters: 107 Mary Lynn Drive, Suite 100, Winchester, VA 22601
Tel: (540) 662-4085 Fax: (540) 662-4083
Northern Virginia: 4411 Plaza Drive, Suite 100, Annandale, VA 22003
Tel: (703) 334-0060 Fax: (703) 334-0061

EROSION CONTROL PLAN PHASE 2

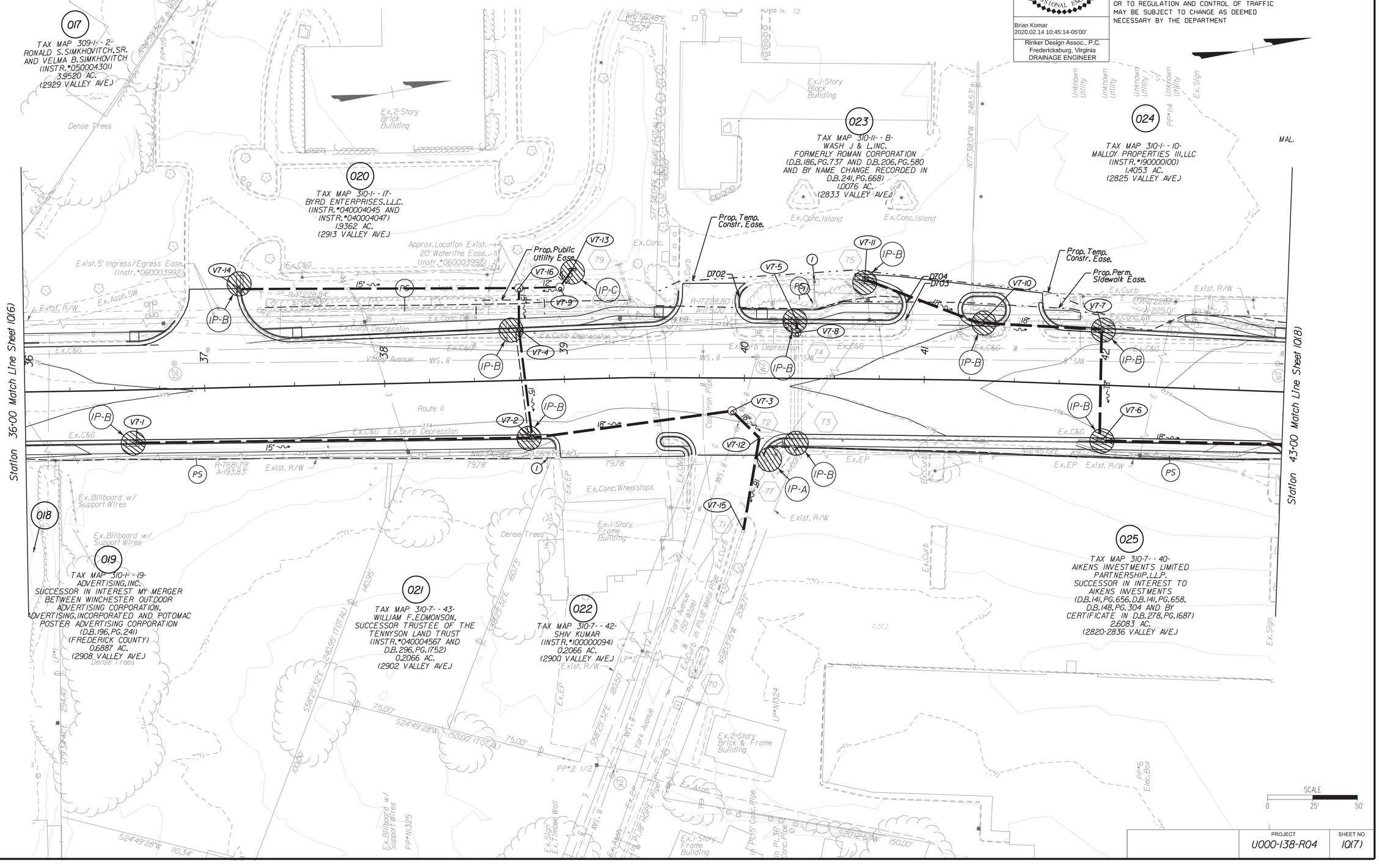

COMMONWEALTH OF VIRGINIA
BRIAN P. KOMAR
Lic. No. 045169
PROFESSIONAL ENGINEER

Brian Komar
2020.02.14 10:45:14-05'00'

Rinker Design Assoc., P.C.
Fredericksburg, Virginia
DRAINAGE ENGINEER

REVISED	STATE	STATE ROUTE	STATE PROJECT	SHEET NO.
	VA.	11	U000-138-R04 R201,C501	10(7)

DESIGN FEATURES RELATING TO CONSTRUCTION OR TO REGULATION AND CONTROL OF TRAFFIC MAY BE SUBJECT TO CHANGE AS DEEMED NECESSARY BY THE DEPARTMENT

PROJECT	SHEET NO.
U000-138-R04	10(7)

2/14/2020
9:04:04 AM

d1030130010q08).dgn
Plotted By: mbeales

PROJECT MANAGER Perry Eisenach, P.E. - City of Winchester (540) 667-2085
SURVEYED BY, DATE Sidney Thomas, L.S. - Rinker Design Associates (703) 368-7373, October 2014
DESIGN BY John A. Glomelli, P.E. - Rinker Design Associates (703) 334-0060
SUBSURFACE UTILITY BY, DATE Matthew Bansiem - Mid Atlantic Utility Locating (703) 378-0100, August 2014

Rinker Design Associates, P.C.
Civil Engineering • Surveying • Environmental
Transportation • Land Development • Right of Way Services

Office Locations
Corporate Headquarters: 10437 Innovation Drive, Suite 190, Manassas, VA 20110, Phone: (703) 334-0060, Fax: (703) 334-0263
Winchester Office: 107 N. Kent Street, Suite 201, Winchester, VA 22601, Phone: (540) 667-2085, Fax: (540) 665-0050
Richmond Office: 4914 Fitzhugh Avenue, Suite 202, Richmond, VA 23230, Phone: (804) 355-1460, Fax: (804) 355-0611

EROSION CONTROL PLAN PHASE 2

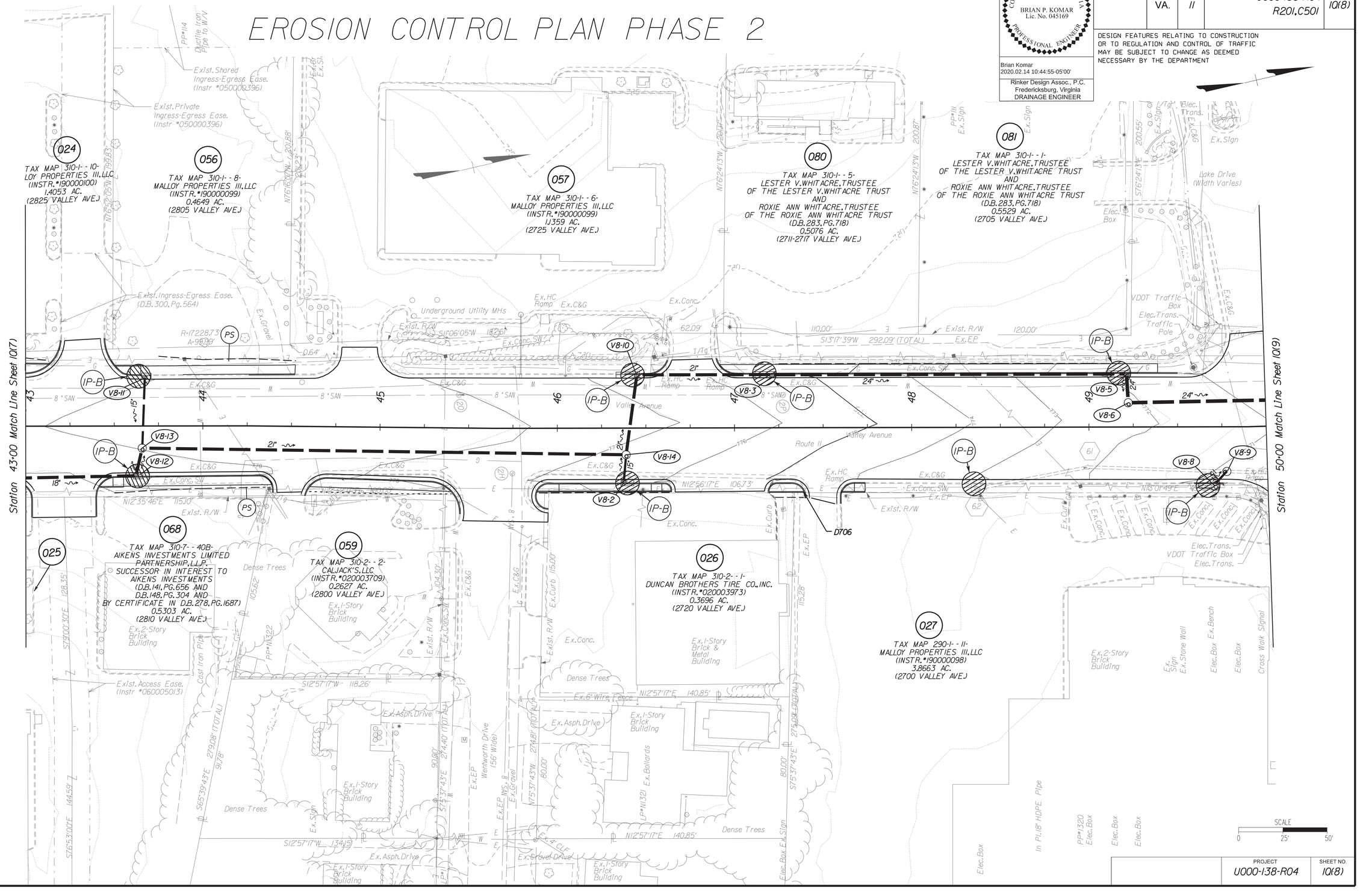

COMMONWEALTH OF VIRGINIA
BRIAN P. KOMAR
Lic. No. 045169
PROFESSIONAL ENGINEER

Brian Komar
2020.02.14 10:44:55-05'00'

Rinker Design Assoc., P.C.
Fredericksburg, Virginia
DRAINAGE ENGINEER

REVISED	STATE	STATE ROUTE	STATE PROJECT	SHEET NO.
	VA.	11	U000-138-R04 R201, C501	10(8)

DESIGN FEATURES RELATING TO CONSTRUCTION OR TO REGULATION AND CONTROL OF TRAFFIC MAY BE SUBJECT TO CHANGE AS DEEMED NECESSARY BY THE DEPARTMENT

PROJECT	SHEET NO.
U000-138-R04	10(8)

2/14/2020
9:04:06 AM

d1030130010q(09).dgn
Plotted By: mbeales

PROJECT MANAGER Perry Eisenach, P.E. - City of Winchester (540) 667-2085
SURVEYED BY, DATE Sidney Thomas, L.S. - Rinker Design Associates (703) 368-7373, October 2014
DESIGN BY John A. Glomett, P.E. - Rinker Design Associates (703) 334-0060
SUBSURFACE UTILITY BY, DATE Matthew Bansiem - Mid Atlantic Utility Locating (703) 378-0100, August 2014

EROSION CONTROL PLAN PHASE 2

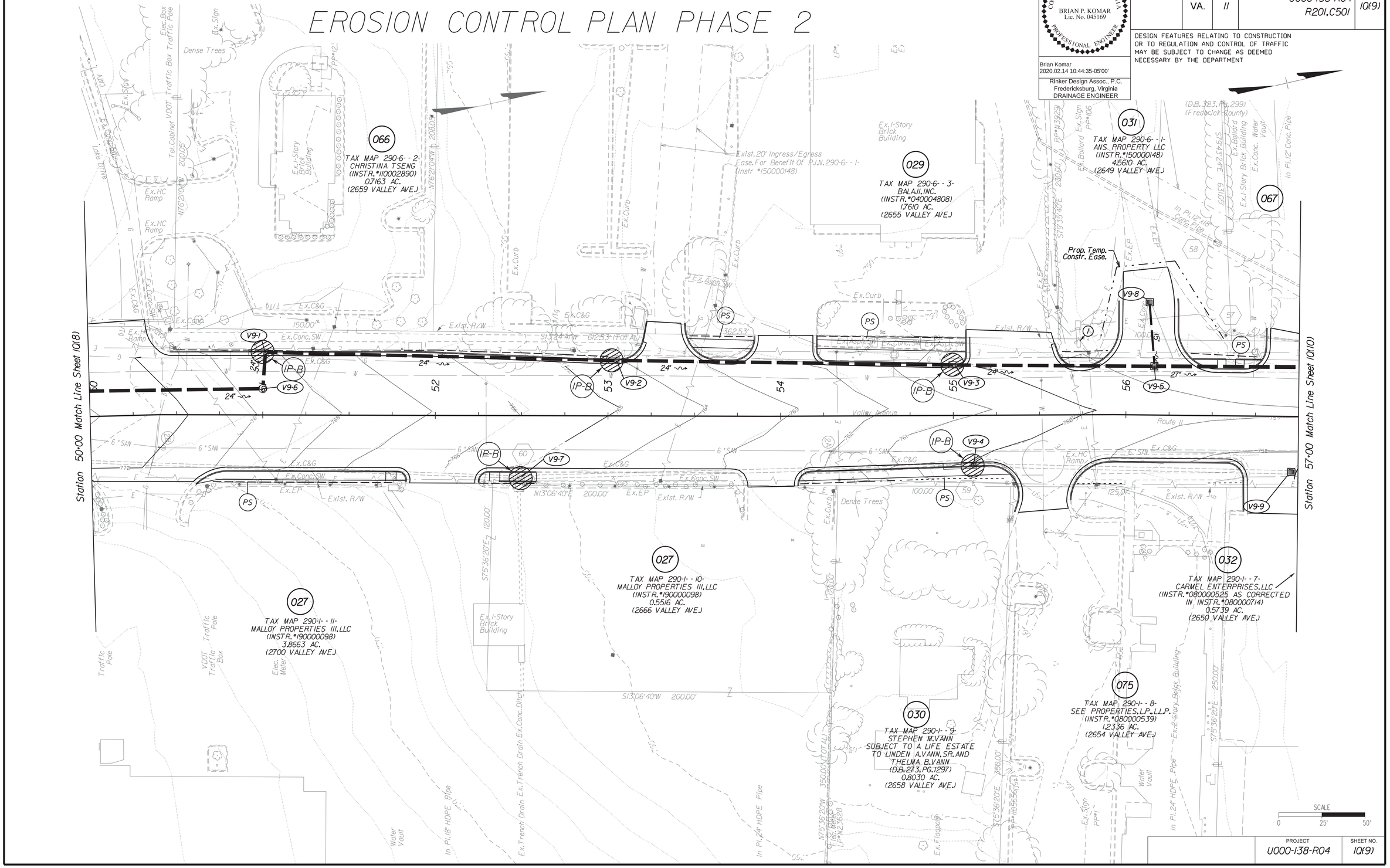

COMMONWEALTH OF VIRGINIA
BRIAN P. KOMAR
Lic. No. 045169
PROFESSIONAL ENGINEER

Brian Komar
2020.02.14 10:44:35-05'00'

Rinker Design Assoc., P.C.
Fredericksburg, Virginia
DRAINAGE ENGINEER

REVISED	STATE	STATE ROUTE	STATE PROJECT	SHEET NO.
	VA.	11	U000-138-R04 R201, C501	10(9)

DESIGN FEATURES RELATING TO CONSTRUCTION OR TO REGULATION AND CONTROL OF TRAFFIC MAY BE SUBJECT TO CHANGE AS DEEMED NECESSARY BY THE DEPARTMENT

PROJECT	SHEET NO.
U000-138-R04	10(9)

Rinker Design Associates, P.C.
Civil Engineering • Surveying • Environmental
Transportation • Land Development • Right of Way Services

Office Locations
Fredericksburg: 4001 Plank Road, Suite 100, Fredericksburg, VA 22401, Phone: (540) 373-2810, Fax: (540) 373-2811
Leesburg: 1000 Harrison Street, S.E., Leesburg, VA 20175, Phone: (703) 777-7510, Fax: (703) 777-7511
Manassas: 10640 Main Street, Suite 100, Manassas, VA 20110, Phone: (703) 330-0060, Fax: (703) 330-0061
Winchester: 107 N. Kent Street, Suite 101, Winchester, VA 22601, Phone: (540) 667-2085, Fax: (540) 667-2086

2/14/2020
9:04:09 AM

d1030130010q10.dgn
Plotted By: mbeales

PROJECT MANAGER Perry Eisenach, P.E. - City of Winchester (540) 667-2085
SURVEYED BY, DATE Sidney Thomas, L.S. - Rinker Design Associates (703) 368-7373, October 2014
DESIGN BY John A. Glometti, P.E. - Rinker Design Associates (703) 334-0060
SUBSURFACE UTILITY BY, DATE Matthew Bansem - Mid Atlantic Utility Locating (703) 378-0100, August 2014

Rinker Design Associates, P.C.
Civil Engineering • Surveying • Environmental
Transportation • Land Development • Right-of-Way Services
Office Locations
Northern Virginia: 4101 Mayfair Boulevard, Suite 100, Fairfax, VA 22030, Phone: (703) 334-0060, Fax: (703) 334-0061
Shenandoah Valley: 107 Maple Avenue Extended, Suite 106, Harrisonburg, VA 22801, Phone: (540) 433-2510, Fax: (540) 433-2511

EROSION CONTROL PLAN PHASE 2

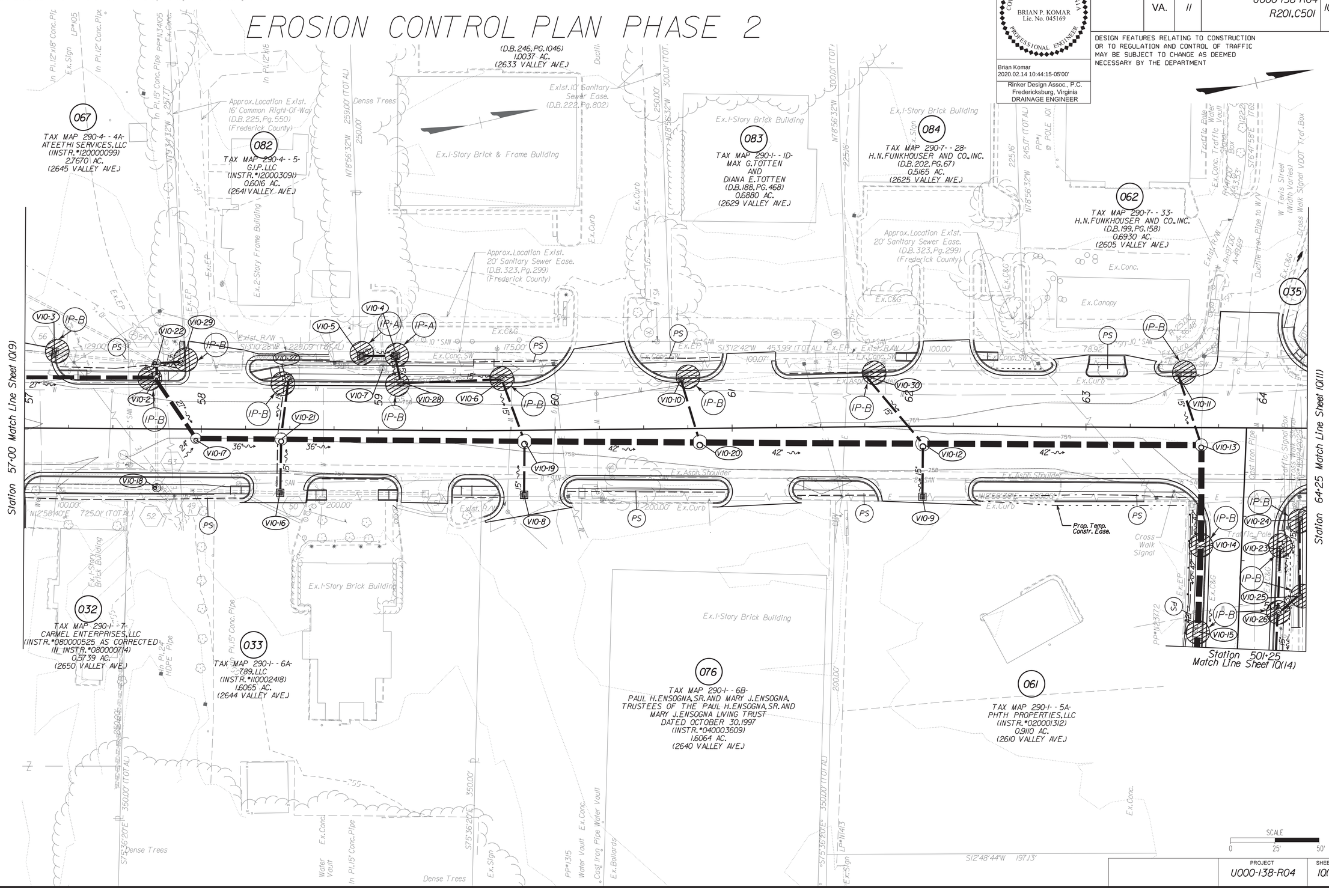

COMMONWEALTH OF VIRGINIA
BRIAN P. KOMAR
Lic. No. 045169
PROFESSIONAL ENGINEER

Brian Komar
2020.02.14 10:44:15-05'00'

Rinker Design Assoc., P.C.
Fredericksburg, Virginia
DRAINAGE ENGINEER

REVISED	STATE	ROUTE	PROJECT	SHEET NO.
	VA.	11	U000-138-R04 R201, C501	10(10)

DESIGN FEATURES RELATING TO CONSTRUCTION OR TO REGULATION AND CONTROL OF TRAFFIC MAY BE SUBJECT TO CHANGE AS DEEMED NECESSARY BY THE DEPARTMENT

PROJECT	SHEET NO.
U000-138-R04	10(10)

2/14/2020
9:04:12 AM

d1030130010(11).dgn
Plotted By: mbeales

PROJECT MANAGER Perry Eisenach, P.E. - City of Winchester (540) 667-2085
SURVEYED BY, DATE Sidney Thomas, L.S. - Rinker Design Associates (703) 368-7373, October 2014
DESIGN BY John A. Glomelli, P.E. - Rinker Design Associates (703) 334-0060
SUBSURFACE UTILITY BY, DATE Matthew Ransom - Mid Atlantic Utility Locating (703) 378-0100, August 2014

EROSION CONTROL PLAN PHASE 2

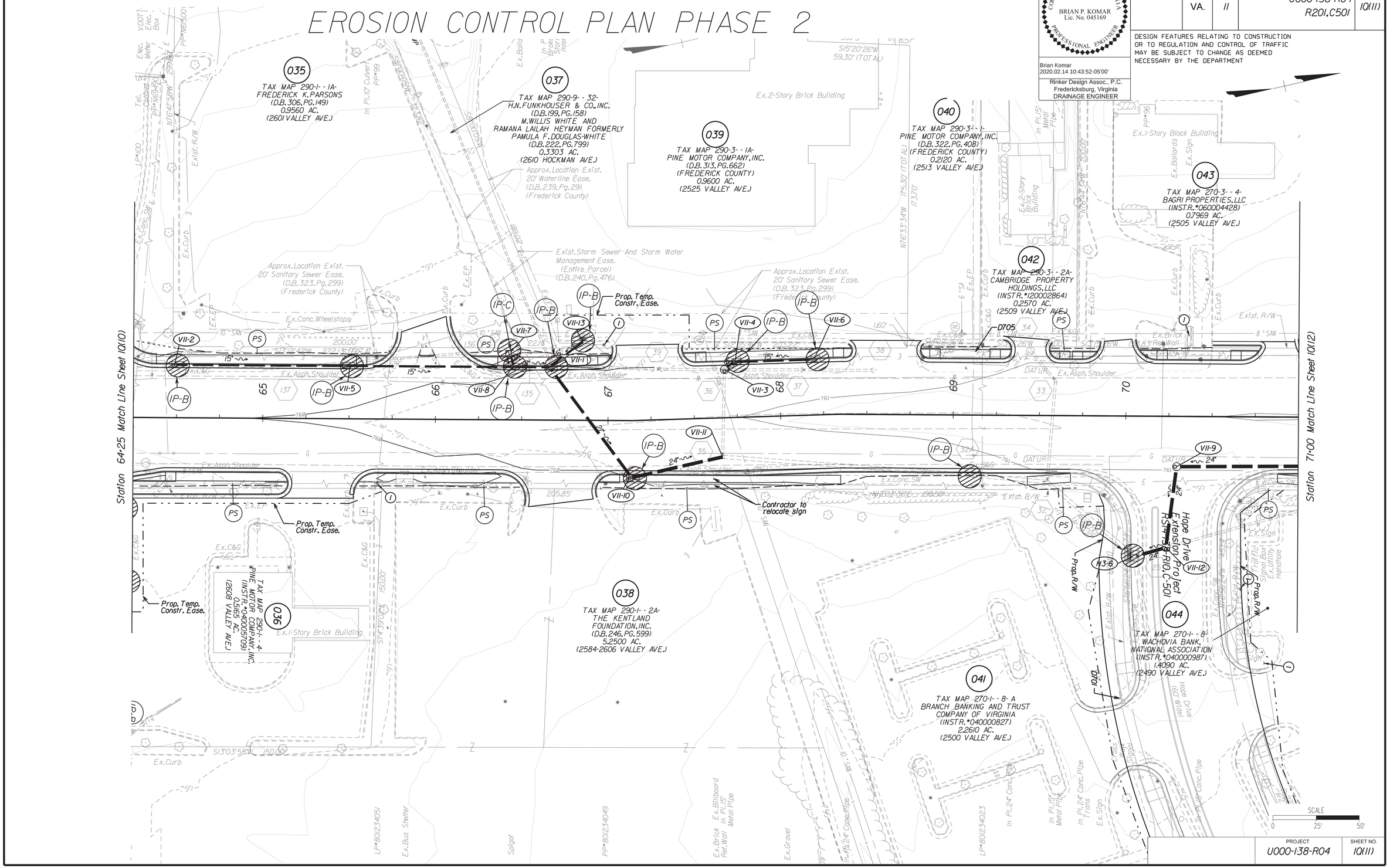

Rinker Design Associates, P.C.
Civil Engineering • Surveying • Environmental
Transportation • Land Development
Right of Way Services
Office Locations
Corporate Headquarters: 8607 Westwood Center Drive, Suite 310, Vienna, VA 22182, Tel: (703) 334-0060
Fairfax Office: 4031 University Drive, Suite 100, Fairfax, VA 22030, Tel: (703) 591-2626, Fax: (703) 591-2628
Winchester Office: 1400 Jim Bishop Drive, Suite 100, Winchester, VA 22601, Tel: (540) 667-2085, Fax: (540) 667-2086

COMMONWEALTH OF VIRGINIA
BRIAN P. KOMAR
Lic. No. 045169
PROFESSIONAL ENGINEER

Brian Komar
2020.02.14 10:43:52-05'00'
Rinker Design Assoc., P.C.
Fredericksburg, Virginia
DRAINAGE ENGINEER

REVISED	STATE	STATE ROUTE	STATE PROJECT	SHEET NO.
	VA.	11	U000-138-R04 R201, C501	10(11)

DESIGN FEATURES RELATING TO CONSTRUCTION OR TO REGULATION AND CONTROL OF TRAFFIC MAY BE SUBJECT TO CHANGE AS DEEMED NECESSARY BY THE DEPARTMENT

PROJECT	SHEET NO.
U000-138-R04	10(11)

2/14/2020
9:04:15 AM

d10301300lq(12).dgn
Plotted By: mbeales

PROJECT MANAGER Perry Eisenach, P.E. - City of Winchester (540) 667-2085
SURVEYED BY, DATE Sidney Thomas, L.S. - Rinker Design Associates (703) 368-7373, October 2014
DESIGN BY John A. Glomelli, P.E. - Rinker Design Associates (703) 334-0060
SUBSURFACE UTILITY BY, DATE Matthew Bansiem - Mid Atlantic Utility Locating (703) 378-0100, August 2014

Rinker Design Associates, P.C.
Civil Engineering • Surveying • Environmental
Transportation • Land Development • Planning
Right of Way Services
WWW.RINKERDESIGN.COM

Office Locations
Corporate Headquarters
10522 Judicial Drive
Fairfax, VA 22030
Phone: (703) 334-0060
Fax: (703) 352-0265

Fredericksburg Office
2101 Plank Road
Fredericksburg, VA 22401
Phone: (540) 373-8711
Fax: (540) 373-8711

Richmond Office
4914 Fitzhugh Avenue
Richmond, VA 23230
Phone: (804) 355-8800
Fax: (804) 355-8801

EROSION CONTROL PLAN PHASE 2

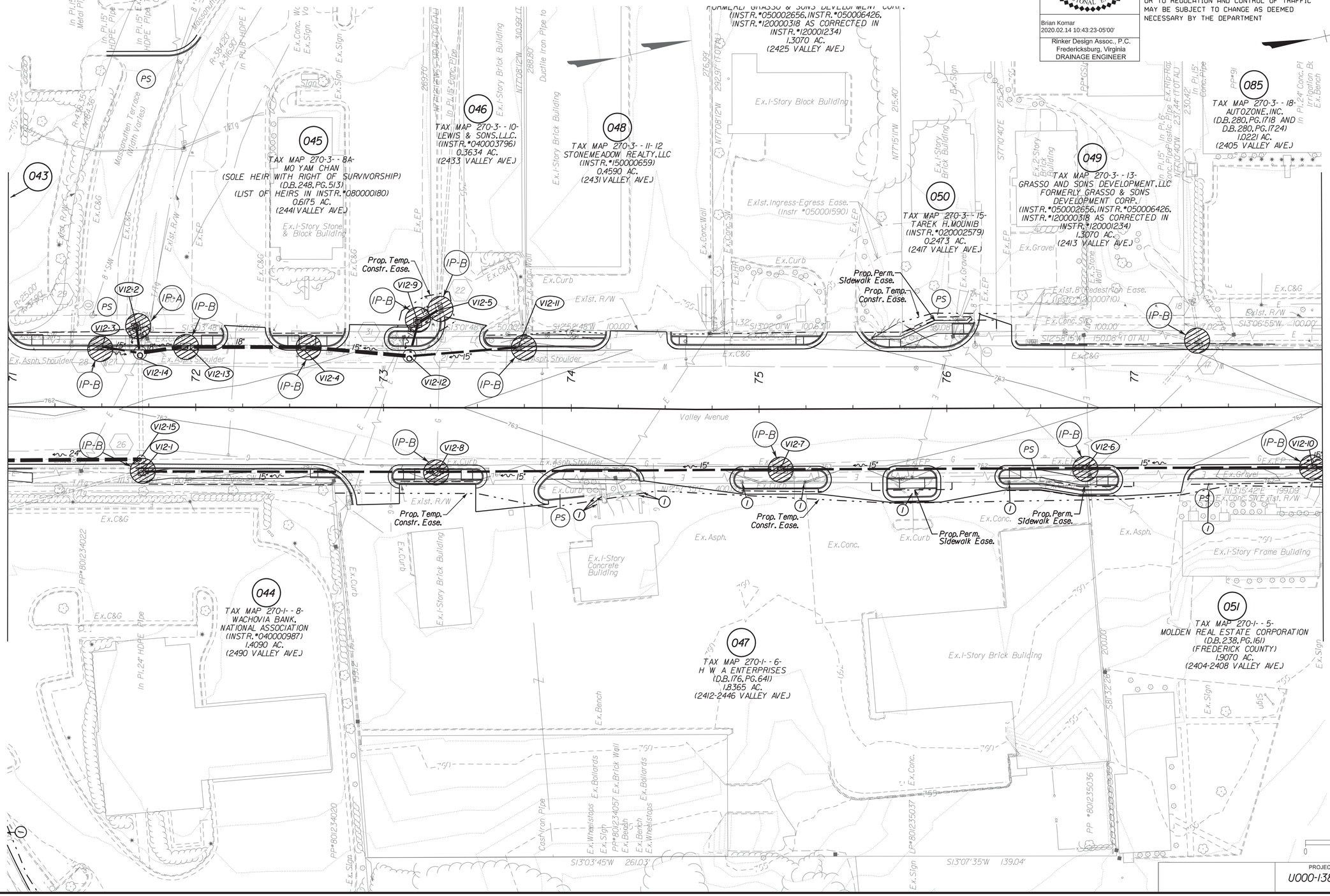

REVISED	STATE	ROUTE	PROJECT	SHEET NO.
	VA.	11	U000-138-R04 R201, C501	10(12)

COMMONWEALTH OF VIRGINIA
BRIAN P. KOMAR
Lic. No. 045169
PROFESSIONAL ENGINEER

Brian Komar
2020.02.14 10:43:23-05'00'

Rinker Design Assoc., P.C.
Fredericksburg, Virginia
DRAINAGE ENGINEER

DESIGN FEATURES RELATING TO CONSTRUCTION OR TO REGULATION AND CONTROL OF TRAFFIC MAY BE SUBJECT TO CHANGE AS DEEMED NECESSARY BY THE DEPARTMENT

PROJECT	SHEET NO.
U000-138-R04	10(12)

PROJECT MANAGER Perry Eisenach, P.E. - City of Winchester (540) 667-2085
SURVEYED BY, DATE Sidney Thomas, L.S. - Rinker Design Associates (703) 368-7373, October 2014
DESIGN BY John A. Glomelli, P.E. - Rinker Design Associates (703) 334-0060
SUBSURFACE UTILITY BY, DATE Matthew Bansiem - Mid Atlantic Utility Locating (703) 378-0100, August 2014

EROSION CONTROL PLAN PHASE 2

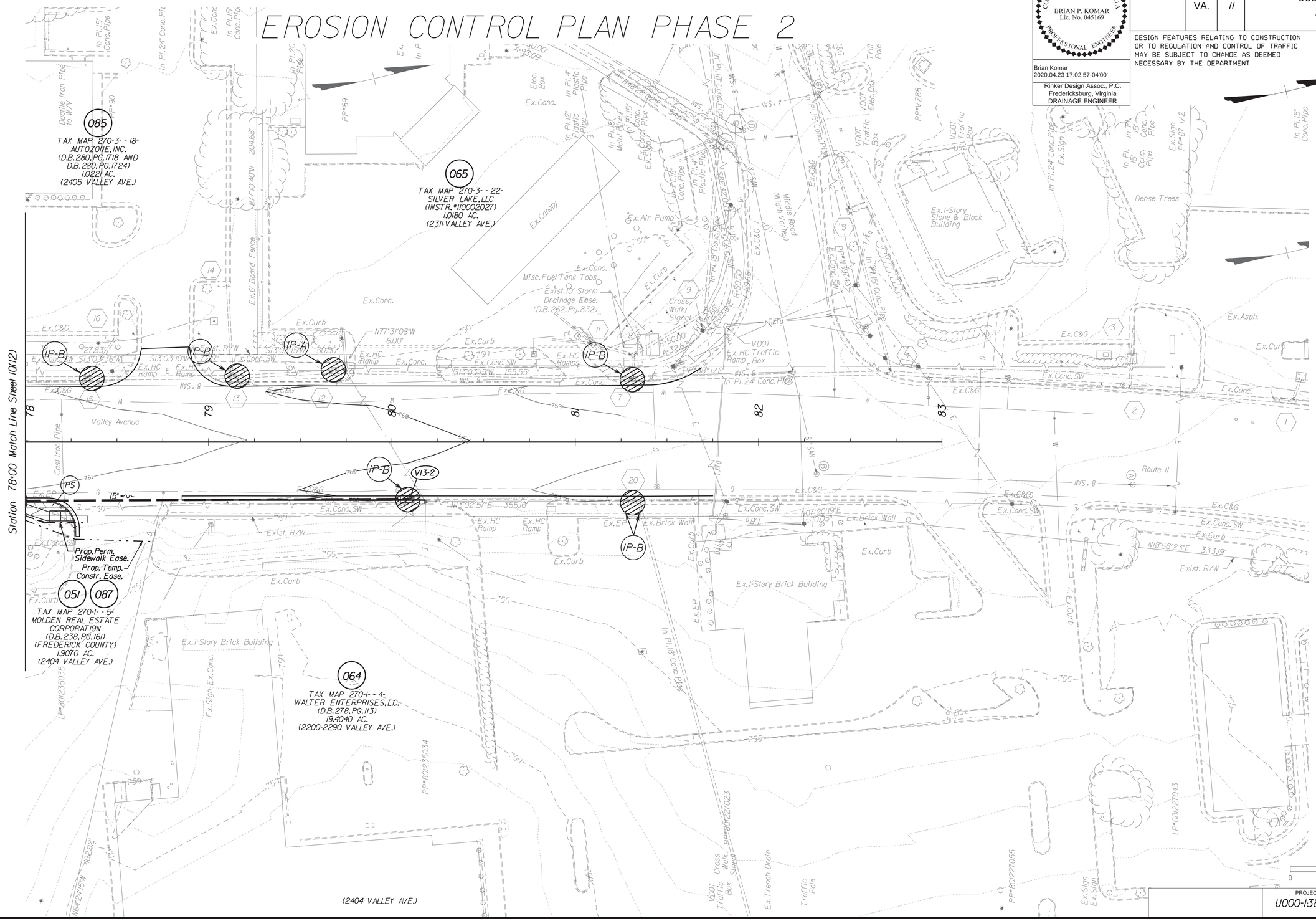

COMMONWEALTH OF VIRGINIA
BRIAN P. KOMAR
Lic. No. 045169
PROFESSIONAL ENGINEER

Brian Komar
2020.04.23 17:02:57-04'00'

Rinker Design Assoc., P.C.
Fredericksburg, Virginia
DRAINAGE ENGINEER

REVISED	STATE	ROUTE	PROJECT	SHEET NO.
	VA.	11	U000-138-R04 R201, C501	10(13)

DESIGN FEATURES RELATING TO CONSTRUCTION OR TO REGULATION AND CONTROL OF TRAFFIC MAY BE SUBJECT TO CHANGE AS DEEMED NECESSARY BY THE DEPARTMENT

PROJECT	SHEET NO.
U000-138-R04	10(13)

Rinker Design Associates, P.C.
Civil Engineering • Surveying • Environmental
Transportation • Land Development • Right of Way Services
Office Locations
Fredericksburg, Virginia
Tel: (540) 373-2020
Fax: (540) 373-2021
Leesburg, Virginia
Tel: (703) 777-7510
Fax: (703) 777-7511
Richmond, Virginia
Tel: (804) 323-0000
Fax: (804) 323-0001
Winchester, Virginia
Tel: (540) 667-2085
Fax: (540) 667-2086
Front Royal, Virginia
Tel: (540) 635-2020
Fax: (540) 635-2021
www.rinkerdesign.com

PROJECT MANAGER Perry Eisenach, P.E. - City of Winchester (540) 667-2085
SURVEYED BY, DATE Sidney Thomas, L.S. - Rinker Design Associates (703) 368-7373, October 2014
DESIGN BY John A. Glomelli, P.E. - Rinker Design Associates (703) 334-0060
SUBSURFACE UTILITY BY, DATE Matthew Banslem - Mid Atlantic Utility Locating (703) 378-0100, August 2014

EROSION CONTROL PLAN PHASE 2

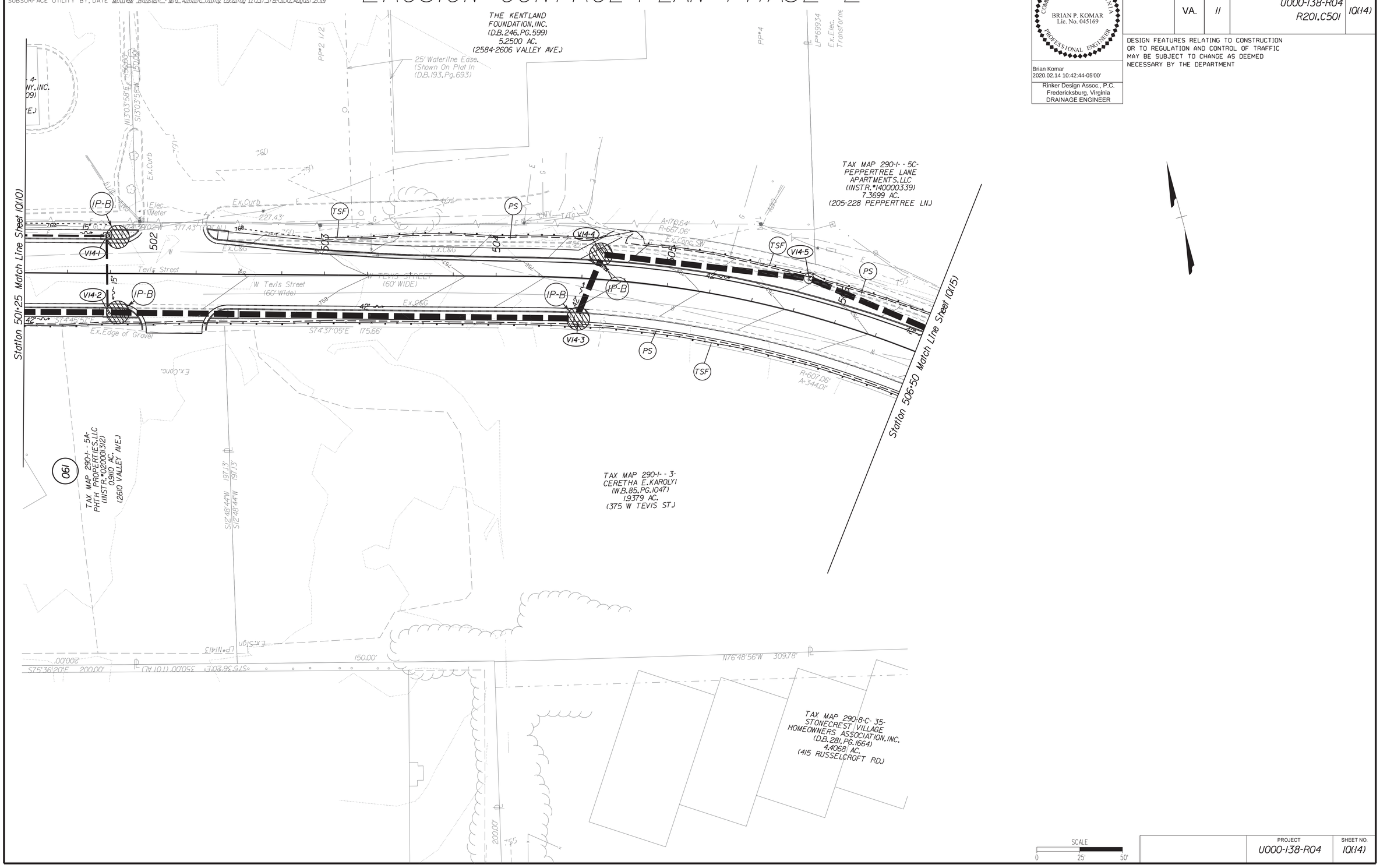

REVISED	STATE	STATE ROUTE	STATE PROJECT	SHEET NO.
	VA.	11	U000-138-R04 R201,C501	10(14)

COMMONWEALTH OF VIRGINIA
BRIAN P. KOMAR
Lic. No. 045169
PROFESSIONAL ENGINEER

Brian Komar
2020.02.14 10:42:44-05'00'

Rinker Design Assoc., P.C.
Fredericksburg, Virginia
DRAINAGE ENGINEER

DESIGN FEATURES RELATING TO CONSTRUCTION OR TO REGULATION AND CONTROL OF TRAFFIC MAY BE SUBJECT TO CHANGE AS DEEMED NECESSARY BY THE DEPARTMENT

SCALE
0 25' 50'

PROJECT	SHEET NO.
U000-138-R04	10(14)

Rinker Design Associates, P.C.
Civil Engineering • Surveying • Environmental
Transportation • Land Development
Right-of-Way Services
Office Locations
Main Office
4101 Fairfax Boulevard
Suite 100
Fairfax, VA 22030
Phone: (703) 334-0060
Fax: (703) 352-0268
Fredericksburg
2101 Plank Road
Suite 101
Fredericksburg, VA 22401
Phone: (540) 373-2085
Fax: (540) 373-0450
Winchester
107 N. Kent Street
Suite 101
Winchester, VA 22601
Phone: (540) 667-2085
Fax: (540) 667-0222

2/14/2020
9:04:25 AM

d10301300lq(15).dgn
Plotted By: mbeales

PROJECT MANAGER Perry Eisenach, P.E. - City of Winchester (540) 667-2085
SURVEYED BY, DATE Sidney Thomas, L.S. - Rinker Design Associates (703) 368-7373, October 2014
DESIGN BY John A. Glomett, P.E. - Rinker Design Associates (703) 334-0060
SUBSURFACE UTILITY BY, DATE Matthew Bansiem - Mid Atlantic Utility Locating (703) 378-0100, August 2014

EROSION CONTROL PLAN PHASE 2

COMMONWEALTH OF VIRGINIA
BRIAN P. KOMAR
Lic. No. 045169
PROFESSIONAL ENGINEER

Brian Komar
2020.02.14 10:42:23-05'00'

Rinker Design Assoc., P.C.
Fredericksburg, Virginia
DRAINAGE ENGINEER

REVISED	STATE	STATE ROUTE	STATE PROJECT	SHEET NO.
	VA.	11	U000-138-R04 R201,C501	1Q(15)

DESIGN FEATURES RELATING TO CONSTRUCTION OR TO REGULATION AND CONTROL OF TRAFFIC MAY BE SUBJECT TO CHANGE AS DEEMED NECESSARY BY THE DEPARTMENT

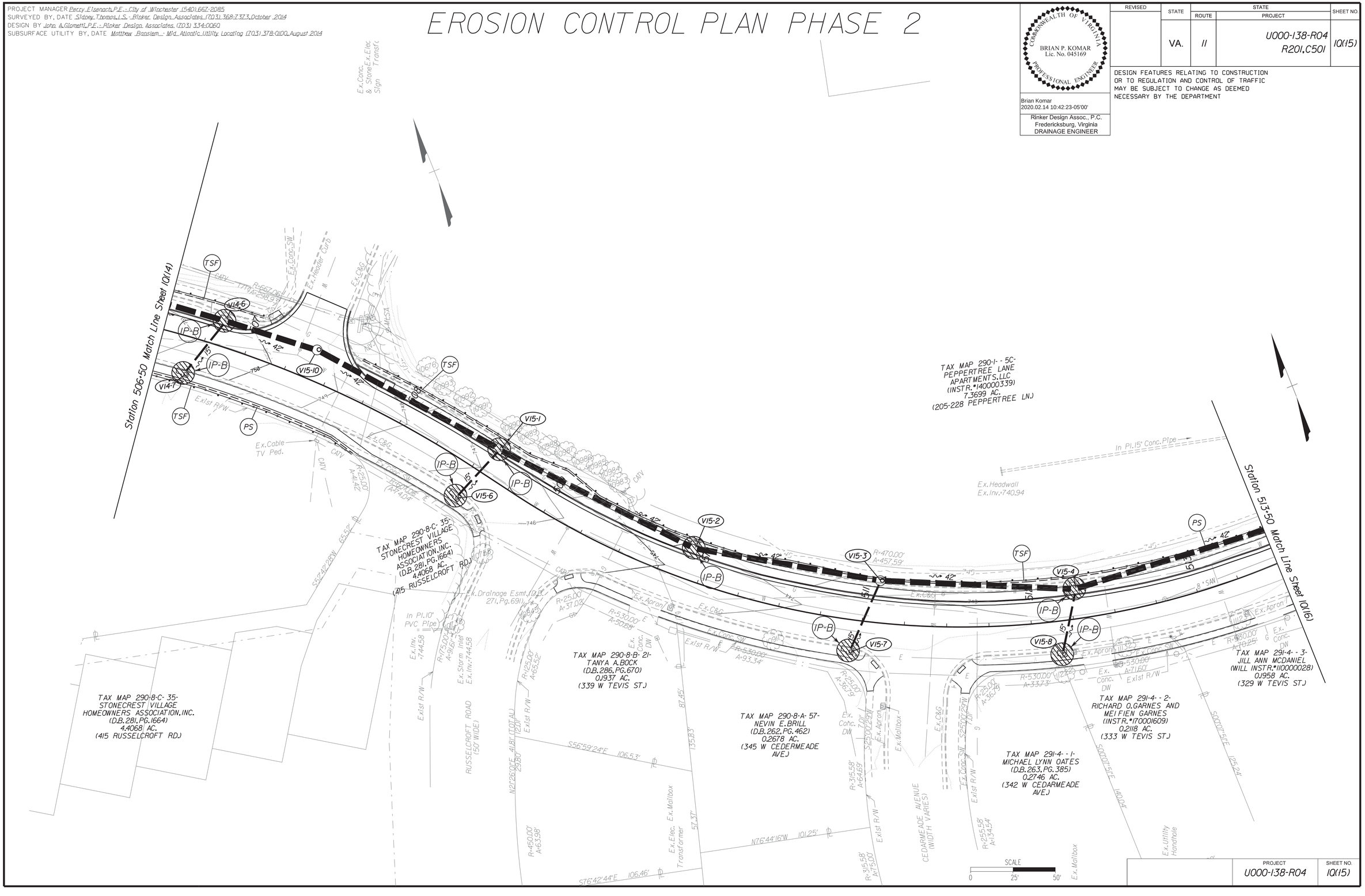

PROJECT	SHEET NO.
U000-138-R04	1Q(15)

Rinker Design Associates, P.C.
Civil Engineering - Surveying - Transportation
Transportation - Environmental
Right of Way Services

Office Locations
Corporate Headquarters
4101 Dominion Boulevard
Glen Allen, VA 23060
Phone: (804) 747-1758
Fax: (804) 673-2337

Fredericksburg
4101 Dominion Boulevard
Glen Allen, VA 23060
Phone: (804) 747-1758
Fax: (540) 658-8860

Winchester
107 Kent Avenue
Stephens City, VA 22655
Phone: (540) 869-2085
Fax: (540) 869-2086

Front Royal
1000 Shenandoah Avenue
Front Royal, VA 22630
Phone: (540) 635-7138
Fax: (540) 635-8211

2/14/2020
9:04:29 AM

d10301300lq16).dgn
Plotted By: mbeales

PROJECT MANAGER Perry Eisenach, P.E. - City of Winchester (540).667-2085
SURVEYED BY, DATE Sidney Thomas, L.S. - Rinker Design Associates (703).368-7373, October 2014
DESIGN BY John A. Glometti, P.E. - Rinker Design Associates. (703) 334-0060
SUBSURFACE UTILITY BY, DATE Matthew Bansiem - Mid Atlantic Utility Locating (703) 378-0100, August 2014

EROSION CONTROL PLAN PHASE 2

Rinker Design Associates, P.C.
Civil Engineering - Surveying - Land Planning
Transportation - Environmental
Right of Way Services

Office Locations
Corporate Headquarters: 10522 Judicial Drive, Suite 100, Fairfax, VA 22030, Phone: (703) 273-2020, Fax: (703) 273-2021
Fredericksburg: 405 Fairview Boulevard, Suite 101, Fredericksburg, VA 22401, Phone: (540) 373-8860, Fax: (540) 373-8861
Winchester: 107 Virginia Avenue, Suite 100, Winchester, VA 22601, Phone: (540) 667-2085, Fax: (540) 667-2086

COMMONWEALTH OF VIRGINIA
BRIAN P. KOMAR
Lic. No. 045169
PROFESSIONAL ENGINEER

Brian Komar
2020.02.14 10:42:01-05'00'

Rinker Design Assoc., P.C.
Fredericksburg, Virginia
DRAINAGE ENGINEER

REVISED	STATE	STATE ROUTE	STATE PROJECT	SHEET NO.
	VA.	11	U000-138-R04 R201,C501	10(16)

DESIGN FEATURES RELATING TO CONSTRUCTION OR TO REGULATION AND CONTROL OF TRAFFIC MAY BE SUBJECT TO CHANGE AS DEEMED NECESSARY BY THE DEPARTMENT

Note: Portion of Tevis St. construction, shown in solid grey, to be constructed as part of the adjacent Hope Drive project (RS14-138-R10).

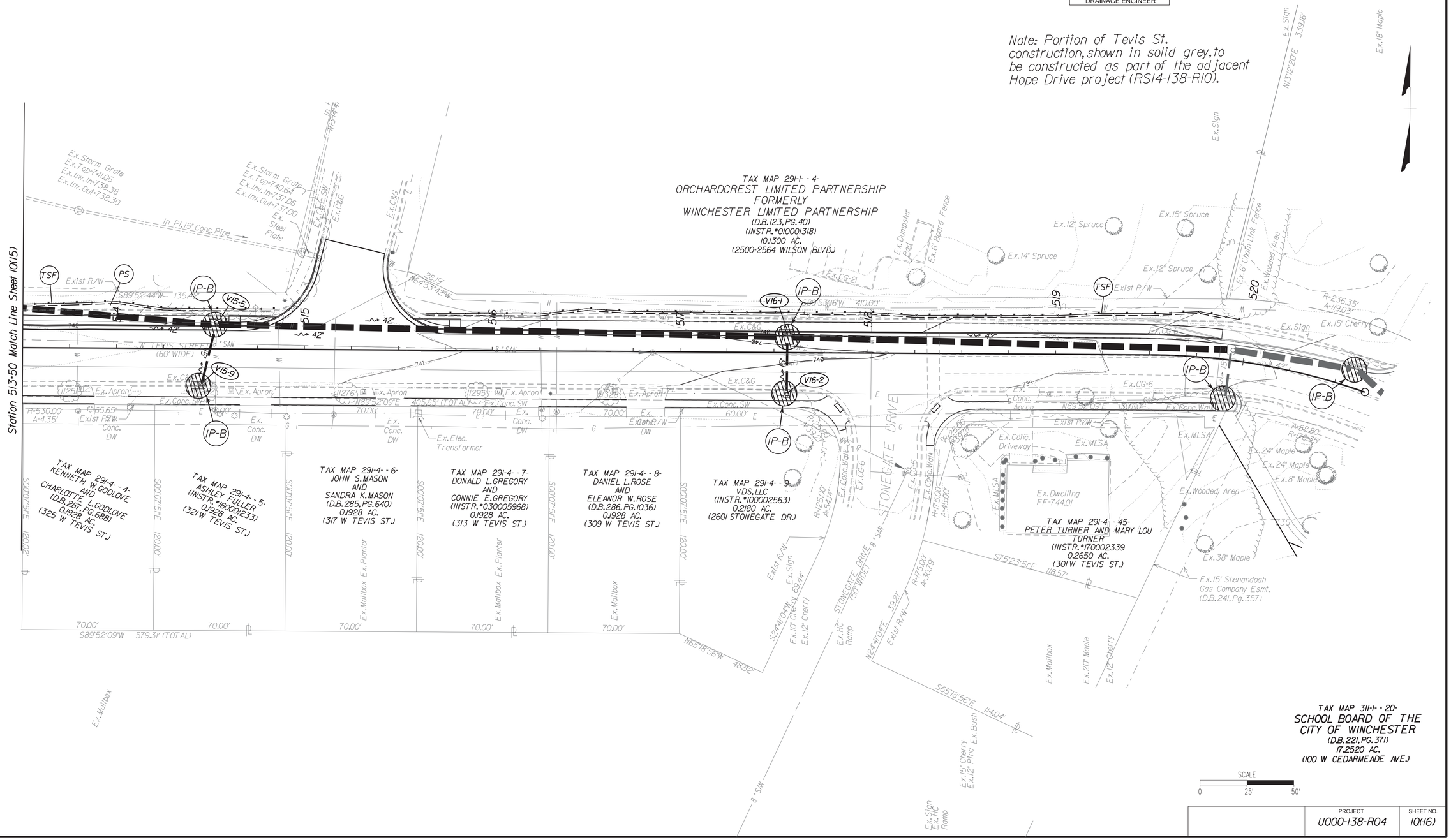

PROJECT	SHEET NO.
U000-138-R04	10(16)

2/14/2020
9:04:32 AM

d10301300Ir.dgn
Plotted By: mbeales

Office Locations

9385 Discovery Boulevard, Suite 200, Manassas, VA 20109, Phone: (703) 368-7373, Fax: (703) 257-5443

4301 Dominion Boulevard, Suite 100, Glen Allen, VA 23060, Phone: (804) 612-0665, Fax: (804) 612-0668

927 Maple Grove Drive, Suite 105, Fredericksburg, VA 22407, Phone: (540) 548-4470, Fax: (540) 548-4471

Rinker Design Associates, P.C.
Civil Engineering - Surveying - Land Planning
Transportation - Environmental
Right of Way Services
www.RDAcivil.com

PROJECT MANAGER Perry Eisenach, P.E. - City of Winchester (540) 667-2085
SURVEYED BY, DATE Sidney Thomas, L.S. - Rinker Design Associates (703) 368-7373, October 2014
DESIGN BY John A. Giometti, P.E. - Rinker Design Associates (703) 334-0060
SUBSURFACE UTILITY BY, DATE Matthew Ranslem - Mid Atlantic Utility Locating (703) 378-0100, August 2014

REVISED	STATE	ROUTE	PROJECT	SHEET NO.
	VA.	11	U000-138-R04 C501	1R

DESIGN FEATURES RELATING TO CONSTRUCTION OR TO REGULATION AND CONTROL OF TRAFFIC MAY BE SUBJECT TO CHANGE AS DEEMED NECESSARY BY THE DEPARTMENT

Existing Drainage Descriptions

No.	Description
1	In.Pl.Storm Inlet Top= 757.04 Inv.In= 750.70 (5) Inv.In= 751.69 (15") Inv.Out= 750.54
2	Approximate Location of Underground Connection
3	In.Pl.Storm Grate Top= 755.90 Inv.In= 752.65 Inv.Out= 752.58
4	In.Pl.Storm Inlet Top= 757.90 Inv.In= 753.98 (5) Inv.In= 753.01 (7) Inv.Out= 752.78
5	In.Pl.Storm Grate Top= 758.90 Inv.In= 757.46 Inv.Out= 757.40
6	In.Pl.Storm MH Top= 763.76 Inv.In= 759.71 Inv.Out= 759.66
7	In.Pl.Storm Inlet Top= 758.67 Inv.In= 754.16 (8) Inv.In= 754.04 (12) Inv.Out= 753.96
8	In.Pl.Storm MH Top= 759.66 Inv.In= 754.46 (9) Inv.In= 754.59 (11) Inv.Out= 754.21
9	In.Pl.Storm MH Top= 759.12 Inv.In= 755.43 Inv.Out= 755.31
10	In.Pl.Storm Inlet Top= 761.10 Inv.In= 756.35 (18") Inv.In= 757.92 (4") Inv.In= 757.87 (4") Inv.Out= 756.29
11	In.Pl.Storm Inlet Top= 760.04 Inv.In= 755.44 (12") Inv.In= 756.62 (4") Inv.Out= 755.40
12	In.Pl.Storm Grate Top= 758.63 Inv.In= 756.03 Inv.Out= 755.83
13	In.Pl.Storm Inlet Top= 760.42 Inv.In= 757.07 (14) Inv.In= 756.27 (15) Inv.Out= 755.78
14	In.Pl.Storm Inlet Top= 760.86 Inv.Out= 757.31
15	In.Pl.Storm Inlet Top= 761.10 Inv.In= 757.68 (16) Inv.In= 756.97 (17) Inv.Out= 756.70
16	In.Pl.Storm Inlet Top= 761.16 Inv.Out= 757.79
17	In.Pl.Storm Inlet Top= 762.54 Inv.In= 757.85 (18) Inv.In= 757.80 (15") Inv.In= 758.14 (6") Inv.Out= 757.34
18	In Pl.End Section Inv.= 759.71
19	In.Pl.Storm Grate Top= 745.34 Inv.In= 740.34 C/L Structure= 739.34
20	In.Pl.Storm Inlet Top= 758.67 Inv.Out= 752.41
21	In.Pl.End Section Inv.= 760.14
22	In.Pl.Storm Inlet Top= 763.64 Inv.In= 760.34 Inv.Out= 760.29
23	In.Pl.Storm Grate Top= 765.91 Inv.In= 761.65 Inv.Out= 761.59
24	In Pl.End Section Inv.= 768.38
25	Ex.In.Pl.Storm MH Top= 758.90 Inv.In= 751.60 (26) Inv.In= 751.66 (32) Inv.Out= 751.21
26	Ex.In.Pl.Storm MH Top= 760.99 Inv.In= 755.61 Inv.Out= 752.99
27	In.Pl.Storm Grate Top= 760.35 Inv.In= 757.75 (28) Inv.In= 758.31 (30) Inv.In= 758.20 (31) Inv.Out= 757.45
28	In.Pl.Storm MH Top= 760.89 Inv.In= PAVED SHUT Inv.Out= PAVED SHUT
29	In.Pl.Storm Grate Top= 760.46 Inv.Out= 758.50
30	In.Pl.End Section Inv.= 758.76
31	In.Pl.End Section Inv.= 759.78
32	Ex.In.Pl.Storm MH Top= 760.90 Inv.In= 753.16 (EX.8) Inv.In= 754.76 (83) Inv.Out= 752.42
32A	Ex.In.Pl.Storm Inlet Top= 760.37 Inv.In= 753.51 Inv.Out= 753.33
33	In.Pl.Storm MH Top= 760.65 Inv.In= PAVED SHUT Inv.Out= PAVED SHUT
34	Ex.In.Pl.Storm Grate Top= 759.30 Inv.Out= 756.70
35	In.Pl.Storm MH Top= 760.02 Inv.In= 755.45 Inv.Out= 754.40
36	In.Pl.Storm MH Top= 759.37 Inv.In= 756.77 (37) Inv.In= 756.82 (39) Inv.Out= 756.74
37	In.Pl.Storm Grate Top= 759.75 Inv.In= 757.27 Inv.Out= 757.21
38	In.Pl.Storm Grate Top= 760.03 Inv.Out= 757.49
39	In.Pl.Storm Grate Top= 759.46 Inv.In= 757.16 Inv.Out= 757.02
40	In.Pl.End Section Inv.Out= 764.49
41	In.Pl.Storm Inlet Top= 771.38 Inv.In= 765.53 Inv.Out= 765.47
42	In.Pl.Storm Inlet Top= 771.51 Inv.In= 766.29 Inv.Out= 766.27
43	In.Pl.Storm MH Top= 774.56 Inv.In= 768.60 (44) Inv.In= 768.00 (45) Inv.Out= 767.78
44	In.Pl.Storm MH Top= 776.35 Inv.In= 769.28 Inv.Out= 769.25
45	In.Pl.Storm Inlet Top= 775.43 Inv.In= 770.16 Inv.Out= 769.91
46	In.Pl.Storm Inlet Top= 777.62 Inv.In= 772.81 (47) Inv.In= 772.17 (48) Inv.Out= 772.10
47	In.Pl.Storm Inlet Top= 777.01 Inv.Out= 773.34
48	In.Pl.Storm Inlet Top= 782.84 Inv.In= 777.41 Inv.Out= 777.19
49	In Pl.Storm Pipe Inv.Out= 754.51
50	In.Pl.Storm Grate Top= 757.01 Inv.In= 755.16 Inv.Out= 755.11
51	In.Pl.Storm Grate Top= 757.24 Inv.Out= 755.30
52	In Pl.Storm Pipe Inv.Out= 754.34
53	In.Pl.Storm MH Top= 758.12 Inv.In= 754.53 (54) Inv.In= 754.32 (59) Inv.Out= 754.31
54	In.Pl.Storm Grate Top= 756.82 Inv.In= 755.17 (55) Inv.In= 755.22 (58) Inv.In= 755.32 (56) Inv.Out= 755.15
55	In.Pl.Storm Grate Top= 757.80 Inv.In= 756.18 Inv.Out= 756.10
56	In.Pl.Storm Grate Top= 757.33 Inv.In= 755.73 Inv.Out= 755.63
57	In Pl.Storm Pipe Inv.= 756.59
58	In.Pl.Storm Grate Top= 757.30 Inv.In= 755.45 Inv.Out= 755.44
59	In.Pl.Storm Inlet Top= 760.80 Inv.In= 756.62 Inv.Out= 756.56
60	In.Pl.Storm Inlet Top= 765.26 Inv.In= 760.91 Inv.Out= 760.89
61	In.Pl.Storm MH Top= 772.04 Inv.In= 766.36 Inv.Out= 766.21
62	In.Pl.Storm Inlet Top= 773.44 Inv.Out= 766.64
63	In.Pl.Endwall Top= 774.97 Inv.Out= 772.71
64	In.Pl.Storm Inlet Top= 775.10 Inv.In= 772.75 Inv.Out= 772.70
65	In.Pl.Storm Inlet Top= 775.07 Inv.Out= 773.10
66	In.Pl.Endwall Top= 774.82 Inv.Out= 772.52
67	In.Pl.Storm Inlet Top= 776.15 Inv.Out= 773.21
68	In Pl.Storm Pipe Inv.Out= 762.09
69	In.Pl.Storm Grate Top= 765.31 Inv.In= 763.39 Inv.Out= 763.11
70	In.Pl.Storm Grate Top= 767.73 Inv.In= 765.99 Inv.Out= 765.89
71	In.Pl.Storm MH Top= 771.83 Inv.In= 768.72 Inv.Out= 768.63
72	In.Pl.Storm MH Top= 773.80 Inv.In= 769.24 Inv.Out= 769.57
73	In.Pl.Storm Inlet Top= 774.65 Inv.In= 769.80 Inv.Out= 769.72
74	In.Pl.Storm Grate Top= 774.23 Inv.In= 771.58 (76) Inv.In= 771.43 (75) Inv.Out= 771.39
75	In.Pl.Storm Inlet Top= 773.33 Inv.Out= 772.03
76	In.Pl.End Section Inv.= 771.94
77	In.Pl.Storm Grate Top= 773.55 Inv.Out= 770.50
78	In.Pl.End Section Inv.= 772.23
79	In.Pl.Headwall Inv.= 772.14
80	In Pl.Storm Pipe Inv.Out= 739.26
81	In.Pl.Storm Grate Top= 745.45 Inv.In= 739.30 Inv.Out= 739.29
82	In.Pl.Storm Grate Top= 747.43 Inv.In= 739.57 Inv.Out= 739.55
83	In.Pl.Storm Grate Top= 748.22 Inv.In= 741.86 Inv.Out= 741.79
84	In.Pl.Storm Grate Top= 749.26 Inv.In= 742.61 Inv.Out= 742.60
85	In.Pl.Storm Inlet Top= 753.17 Inv.In= 743.84 (86) Inv.In= 744.27 (87) Inv.Out= 743.63
86	In.Pl.Storm Inlet Top= 753.44 Inv.In= 744.18 Inv.Out= 744.08
87	In.Pl.Storm Grate Top= 754.74 Inv.In= 748.41 Inv.Out= 748.37
88	In.Pl.Storm Grate Top= 757.24 Inv.In= 752.09 (89) Inv.In= 752.49 (90) Inv.Out= 751.68
89	In.Pl.Storm Grate Top= 757.13 Inv.In= 752.09 Inv.Out= 752.06
90	In Pl.Storm Pipe Inv.=757.57
91	In.Pl.Storm MH Top= 758.21 Inv.In= 752.31 Inv.Out= 752.27
92	In.Pl.Storm MH Top= 759.49 Inv.In= 756.18 Inv.Out= 752.59
93	In.Pl.Storm MH Top= 764.30 Inv.In= 759.34 (94) Inv.In= 759.13 (95) Inv.Out= 759.12
94	In.Pl.Storm Grate Top= 763.92 Inv.Out= 759.77
95	In.Pl.Storm MH Top= 767.63 Inv.In= 763.13 (96) Inv.In= 763.03 (97) Inv.Out= 759.63
96	In.Pl.Storm Inlet Top= 767.55 Inv.Out= 763.28
97	In.Pl.Storm MH Top= 770.10 Inv.In= 765.83 Inv.Out= 765.68
98	In.Pl.Storm Inlet Top= 770.16 Inv.Out= 766.26
99	In Pl.Storm Pipe Inv.Out=741.11
100	In.Pl.Storm Inlet Top= 746.79 Inv.In= 742.18 (102) Inv.In= 742.45 (101) Inv.Out= 742.15
101	In.Pl.Storm Inlet Top= 746.85 Inv.Out= 742.69
102	In.Pl.Storm Inlet Top= 748.07 Inv.In= 742.46 (103) Inv.In= 742.48 (30") Inv.Out= 742.42
103	In.Pl.Storm MH Top= 749.07 Inv.In= 743.10 (104) Inv.In= 743.16 (18") Inv.Out= 743.08
104	In.Pl.Storm Inlet Top= 750.70 Inv.In= 744.55 (106) Inv.In= 743.58 (107) Inv.In= 746.02 (12") Inv.Out= 743.55
106	In.Pl.Storm Inlet Top= 749.11 Inv.Out= 745.08
107	In.Pl.Storm Inlet Top= 750.94 Inv.In= 744.86 (108) Inv.In= 744.86 (108) Inv.In= 744.89 (24") Inv.Out= 744.82
108	In.Pl.Storm Inlet Top= 751.82 Inv.In= 749.32 Inv.Out= 748.37
109	Approximate Location of Underground Connection
110	In.Pl.Storm Inlet Top= 753.44 Inv.In= 752.14 Inv.Out= 752.09
111	In.Pl.Storm Inlet Top= 758.36 Inv.In= 752.30 (111) Inv.In= 752.40 (114) Inv.Out= 752.08
112	In.Pl.Storm Inlet Top= 758.97 Inv.In= 756.92 Inv.Out= 754.66
113	In.Pl.Storm Inlet Top= 760.48 Inv.Out= 757.38
114	In.Pl.Storm Inlet Top= 762.07 Inv.In= 754.98 Inv.Out= 754.17
115	In.Pl.Storm Inlet Top= 762.25 Inv.In= 755.44 Inv.Out= 755.43
116	In.Pl.End Section Inv.= 756.92
117	In.Pl.Storm Inlet Top= 752.85 Inv.In= 749.20 Inv.Out= 749.18
118	In Pl.Storm Pipe Inv.=771.40
119	In Pl.Storm Pipe Inv.=774.69
120	In Pl.Storm Pipe Inv.=777.28
121	In Pl.Storm Pipe Inv.=781.42
122	In Pl.Storm Pipe Inv.=786.42
123	In Pl.Storm Pipe Inv.=760.33
124	In Pl.Storm Pipe Inv.=768.50
125	In Pl.Storm Pipe Inv.=770.90
126	In Pl.Storm Pipe Inv.=774.30
127	In Pl.Storm Pipe Inv.=776.42
128	In Pl.Storm Pipe Inv.=782.08
129	In Pl.Storm Pipe Inv.=784.39
130	In Pl.Storm Pipe Inv.=764.08
131	In Pl.Storm Pipe Inv.=765.24
132	In Pl.Storm Pipe Inv.= 763.14
133	In Pl.Storm Pipe Inv.= 763.67
134	In Pl.Storm Pipe Inv.= 767.64
135	In Pl.Storm Pipe Inv.=757.45
136	In Pl.Storm Pipe Inv.=757.48
137	In Pl.Storm Pipe Inv.=758.05
138	In Pl.Storm Pipe Inv.Out=757.46
139	In.Pl.Storm Inlet Top= 760.50 Inv.Out= 758.61
140	In Pl.Storm Pipe Inv.=741.59
141	In Pl.Storm Pipe Inv.=742.39
142	In Pl.Storm Pipe Inv.=743.61
143	In Pl.Storm Pipe Inv.=744.32
144	In Pl.Storm Pipe Inv.=755.09
145	In Pl.Storm Pipe Inv.=754.85
146	In Pl.Storm Pipe Inv.=754.90
147	In Pl.Storm Pipe Inv.=754.81

2/14/2020
9:04:35 AM

d:\030\300\is01.dgn
Plotted By: mbeales

PROJECT MANAGER Perry Eisenach, P.E. - City of Winchester (540) 667-2085
SURVEYED BY, DATE Sidney Thomas, L.S. - Rinker Design Associates (703) 368-7373, October 2014
DESIGN BY John A. Giometti, P.E. - Rinker Design Associates (703) 334-0060
SUBSURFACE UTILITY BY, DATE Matthew Bansiem - Mid Atlantic Utility Locating (703) 378-0100, August 2014

Office Locations
Corporate Headquarters: 207 Maple Avenue East, Suite 100, Vienna, VA 22180, Phone: (703) 334-0060, Fax: (703) 255-5507
Fredericksburg, VA: 207 Thornton Boulevard, Suite 100, Fredericksburg, VA 22407, Phone: (540) 373-3000, Fax: (540) 373-0000
Richmond, VA: 4911 Cox Road, Suite 100, Glen Allen, VA 23060, Phone: (804) 346-8000, Fax: (804) 346-8001
Rinker Design Associates, P.C.
Civil Engineering • Surveying • Environmental
Transportation • Land Development • Right of Way Services

ENTRANCE GRADING DETAILS

JOHN A. GIOMETTI
Lic. No. 032300
COMMONWEALTH OF VIRGINIA
PROFESSIONAL ENGINEER

John A Giometti
2020.02.14 16:33:14-05'00'

Rinker Design Assoc., P.C.
Fredericksburg, Virginia
ROADWAY ENGINEER

REVISED	STATE	STATE ROUTE	STATE PROJECT	SHEET NO.
	VA.	II	U000-138-R04 R201,C501	IS

DESIGN FEATURES RELATING TO CONSTRUCTION OR TO REGULATION AND CONTROL OF TRAFFIC MAY BE SUBJECT TO CHANGE AS DEEMED NECESSARY BY THE DEPARTMENT

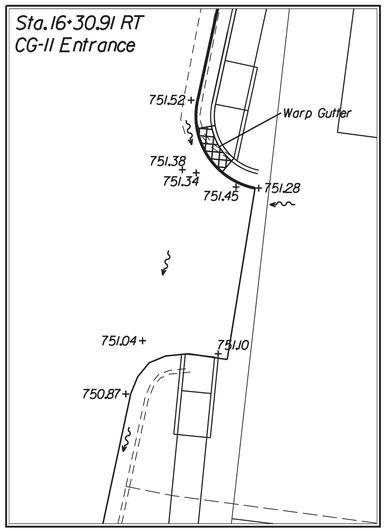

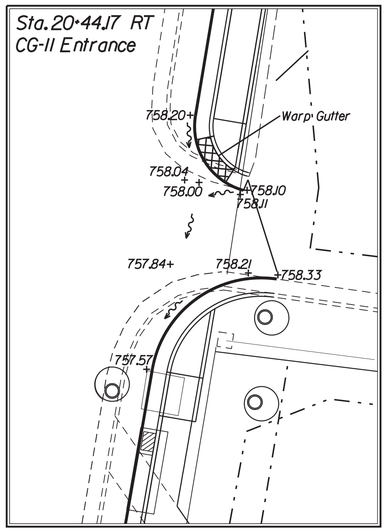

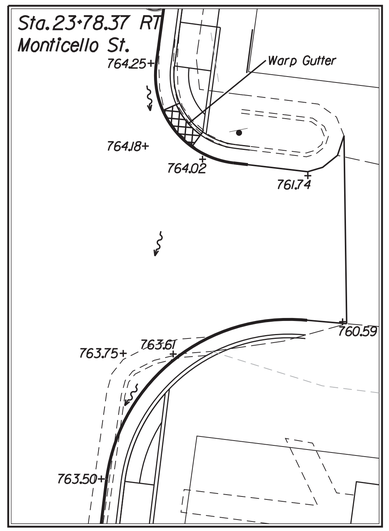

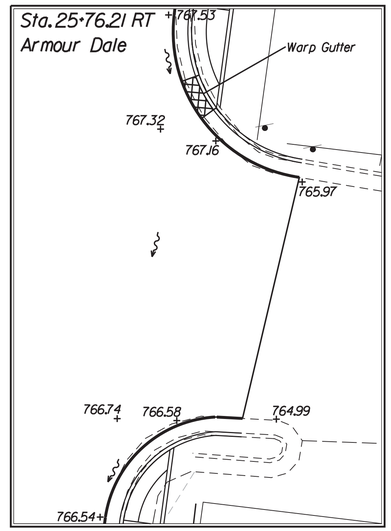

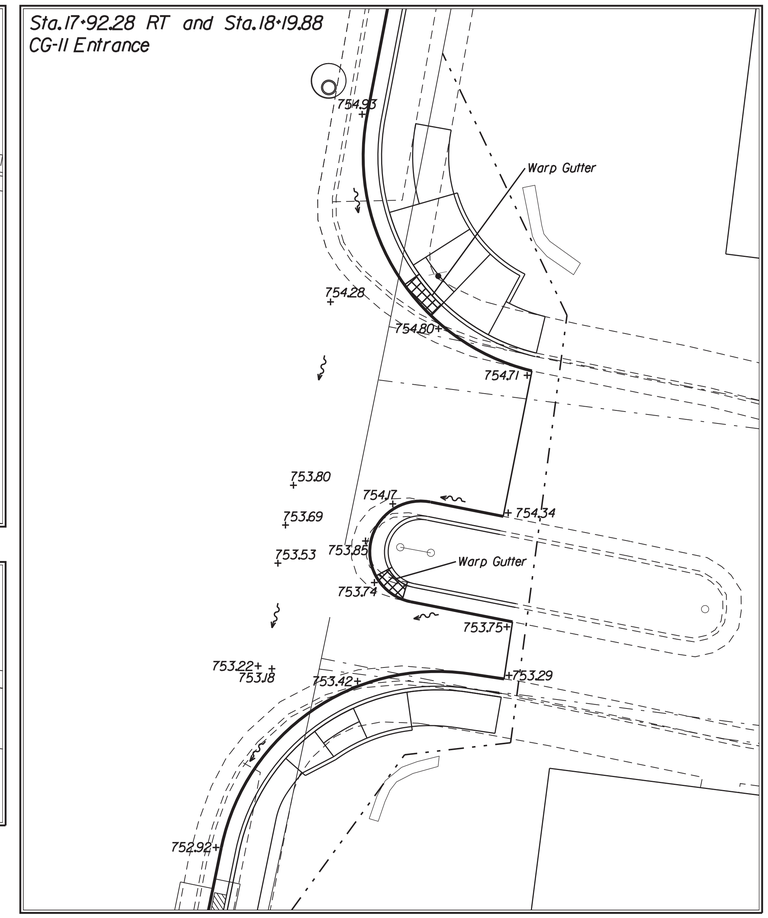

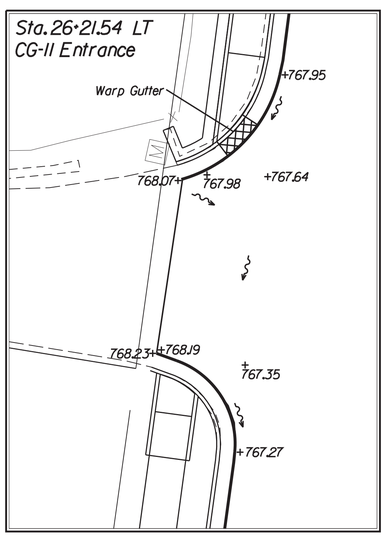

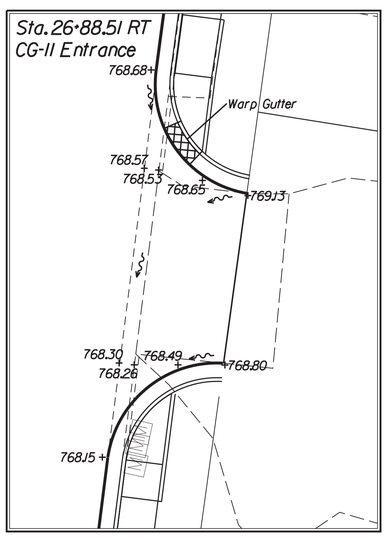

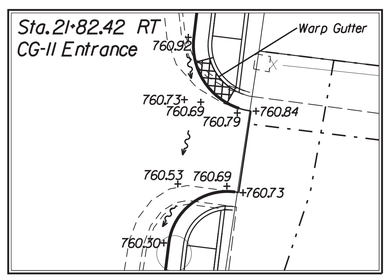

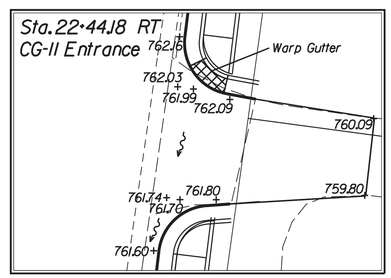

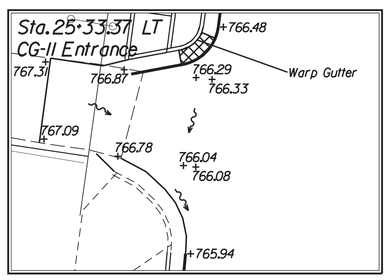

Note: Contractor shall ensure positive drainage at and around the entrances to avoid ponding.

SCALE
0 10'

PROJECT	SHEET NO.
U000-138-R04	IS

PROJECT MANAGER Perry Eisenach, P.E. - City of Winchester (540) 667-2085
SURVEYED BY, DATE Sidney Thomas, L.S. - Rinker Design Associates (703) 368-7373, October 2014
DESIGN BY John A. Giometti, P.E. - Rinker Design Associates (703) 334-0060
SUBSURFACE UTILITY BY, DATE Matthew Bansiem - Mid Atlantic Utility Locating (703) 378-0100, August 2014

ENTRANCE GRADING DETAILS

COMMONWEALTH OF VIRGINIA
JOHN A. GIOMETTI
Lic. No. 032300
PROFESSIONAL ENGINEER

John A Giometti
2020.02.14 16:32:51-05'00'

Rinker Design Assoc., P.C.
Fredericksburg, Virginia
ROADWAY ENGINEER

REVISED	STATE	STATE ROUTE	STATE PROJECT	SHEET NO.
	VA.	11	U000-138-R04 R201,C501	1S(1)

DESIGN FEATURES RELATING TO CONSTRUCTION OR TO REGULATION AND CONTROL OF TRAFFIC MAY BE SUBJECT TO CHANGE AS DEEMED NECESSARY BY THE DEPARTMENT

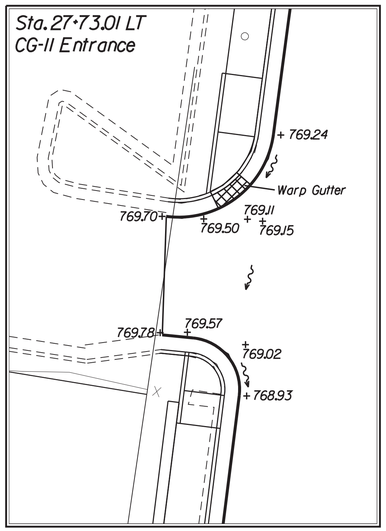

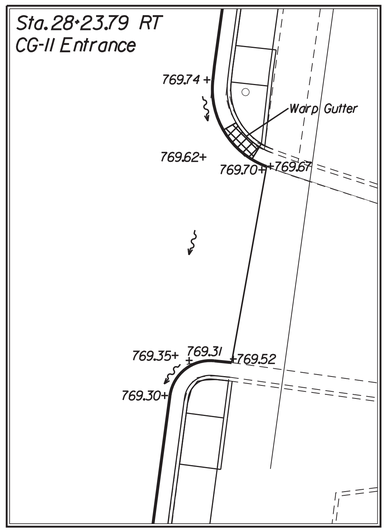

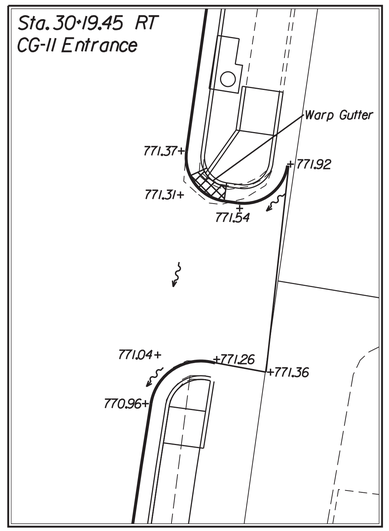

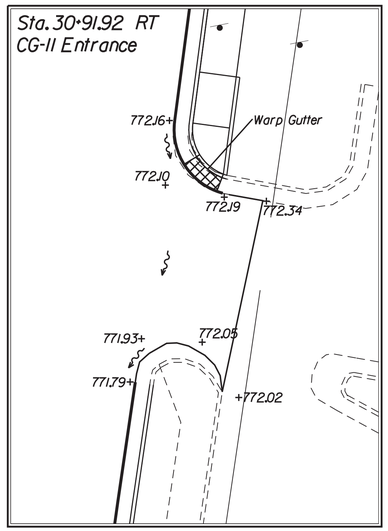

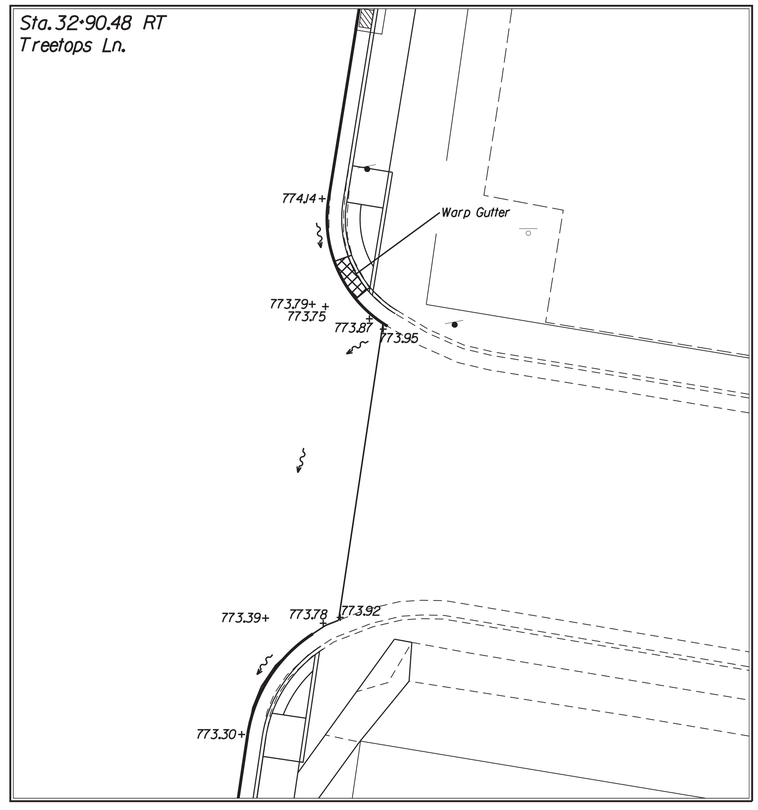

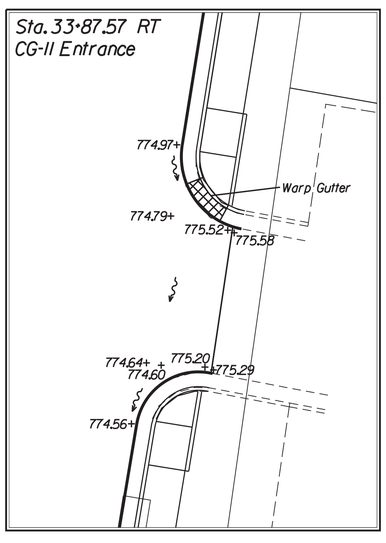

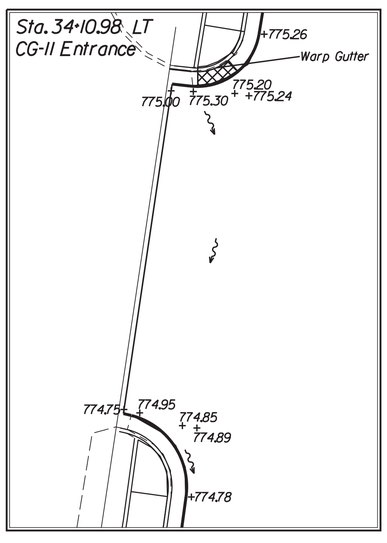

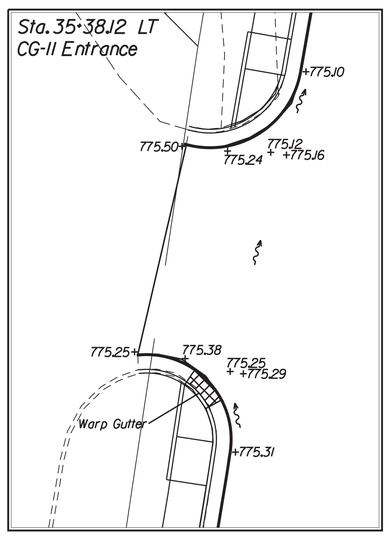

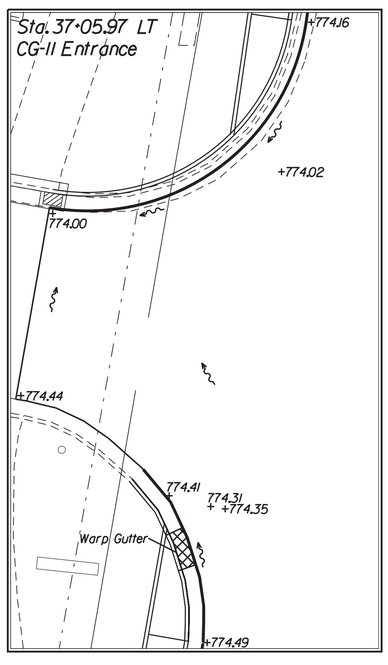

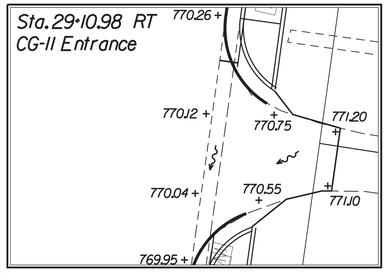

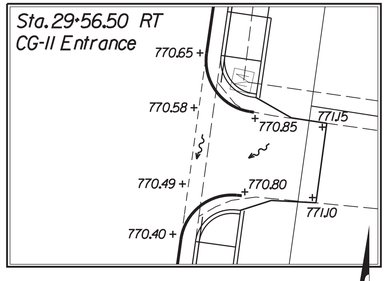

Note: Contractor shall ensure positive drainage at and around the entrances to avoid ponding.

SCALE
0 10'

PROJECT	SHEET NO.
U000-138-R04	1S(1)

Rinker Design Associates, P.C.
Civil Engineering • Surveying • Environmental
Transportation • Right of Way Services
Office Locations
Corporate Headquarters: 401 Lafayette Street, Suite 100, Fredericksburg, VA 22401, Phone: (540) 373-3000, Fax: (540) 373-3001
Northern Virginia: 4121 Wilson Boulevard, Suite 101, Arlington, VA 22203, Phone: (703) 522-4900, Fax: (703) 522-0041
Shenandoah Valley: 1000 Technology Park Drive, Suite 100, Winchester, VA 22601, Phone: (540) 667-2085, Fax: (540) 667-2086

PROJECT MANAGER Perry Eisenach, P.E. - City of Winchester (540) 667-2085
SURVEYED BY, DATE Sidney Thomas, L.S. - Rinker Design Associates (703) 368-7373, October 2014
DESIGN BY John A. Giometti, P.E. - Rinker Design Associates (703) 334-0060
SUBSURFACE UTILITY BY, DATE Matthew Bansiem - Mid Atlantic Utility Locating (703) 378-0100, August 2014

ENTRANCE GRADING DETAILS

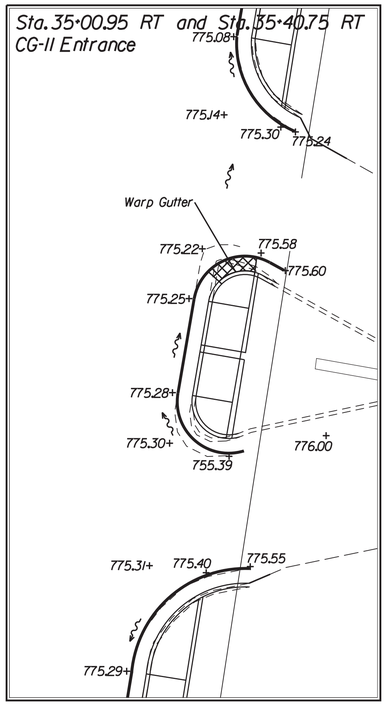

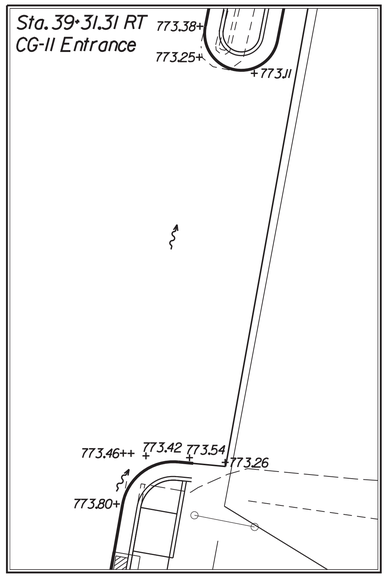

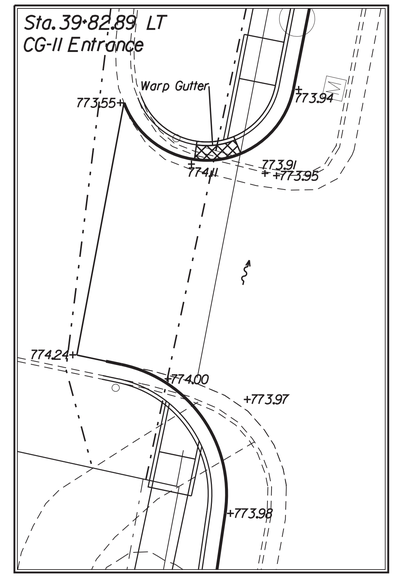

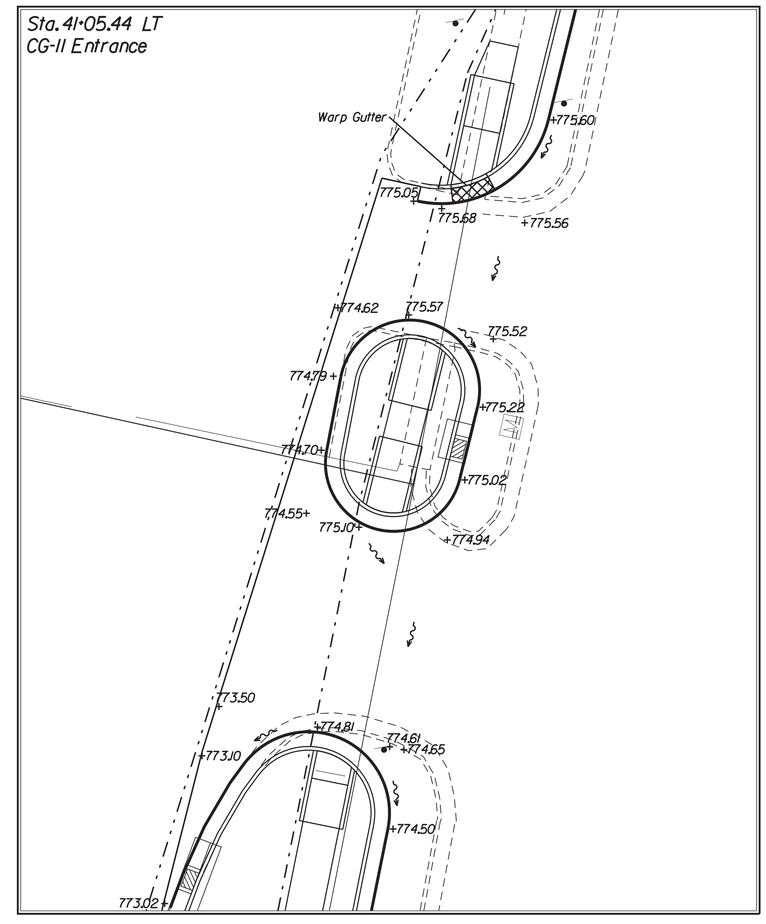

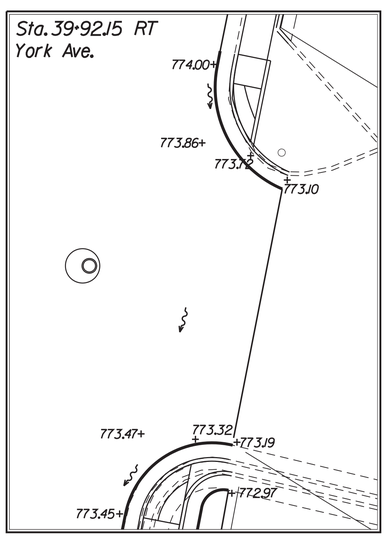

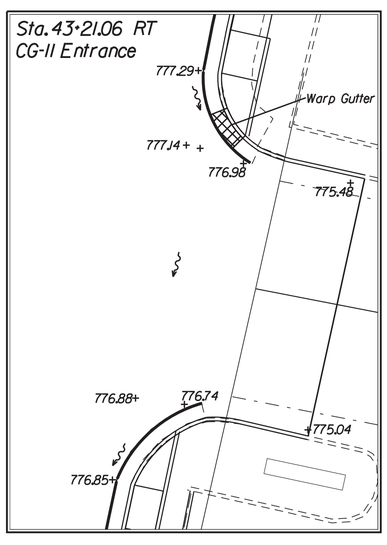

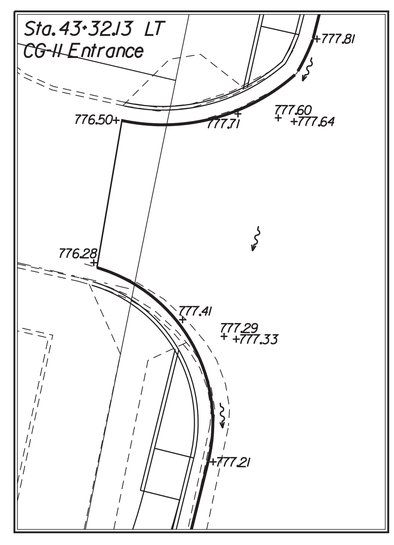

COMMONWEALTH OF VIRGINIA
JOHN A. GIOMETTI
Lic. No. 032300
PROFESSIONAL ENGINEER

John A Giometti
2020.02.14 16:32:24-05'00'

Rinker Design Assoc., P.C.
Fredericksburg, Virginia
ROADWAY ENGINEER

REVISED	STATE	STATE ROUTE	STATE PROJECT	SHEET NO.
	VA.	11	U000-138-R04 R201,C501	1S(2)

DESIGN FEATURES RELATING TO CONSTRUCTION OR TO REGULATION AND CONTROL OF TRAFFIC MAY BE SUBJECT TO CHANGE AS DEEMED NECESSARY BY THE DEPARTMENT

Note: Contractor shall ensure positive drainage at and around the entrances to avoid ponding.

SCALE 0 10'

PROJECT	SHEET NO.
U000-138-R04	1S(2)

Rinker Design Associates, P.C.
Civil Engineering • Surveying • Environmental
Transportation • Land Planning
Right of Way Services
Office Locations
Fredericksburg, Virginia
Tysons Corner, Virginia
Richmond, Virginia
Fairfax, Virginia
Fredericksburg, Virginia
Fax: (540) 373-0223
Tysons Corner, Virginia
Fax: (703) 334-0060
Richmond, Virginia
Fax: (804) 355-0611
Fairfax, Virginia
Fax: (703) 273-0223

PROJECT MANAGER Perry Eisenach, P.E. - City of Winchester (540) 667-2085
SURVEYED BY, DATE Sidney Thomas, L.S. - Rinker Design Associates (703) 368-7373, October 2014
DESIGN BY John A. Giometti, P.E. - Rinker Design Associates (703) 334-0060
SUBSURFACE UTILITY BY, DATE Matthew Bansiem - Mid Atlantic Utility Locating (703) 378-0100, August 2014

Office Locations
Corporate Headquarters: 10632 N. Scottsdale Rd. Suite 150, Palm Beach Gardens, FL 33408 Phone: (561) 627-7171 Fax: (561) 627-1164
207 Maple Avenue East, Vienna, VA 22180 Phone: (703) 334-0060 Fax: (703) 334-0061
207 Maple Avenue East, Suite 100, Vienna, VA 22180 Phone: (703) 334-0060 Fax: (703) 334-0061
Rinker Design Associates, P.C.
Civil Engineering • Surveying • Environmental
Transportation • Land Development • Right of Way Services
SINCE INCORPORATED IN 1978

ENTRANCE GRADING DETAILS

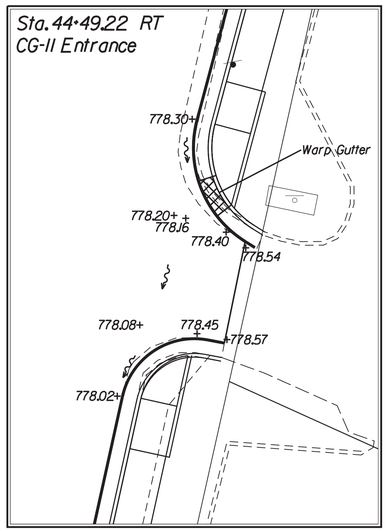

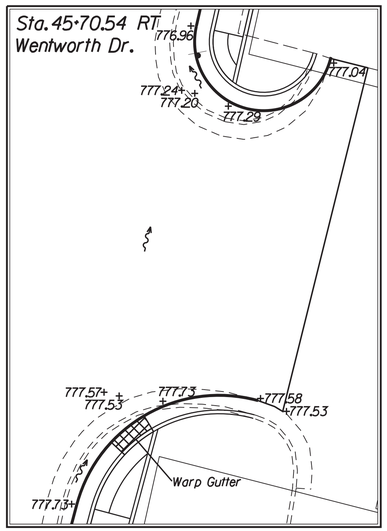

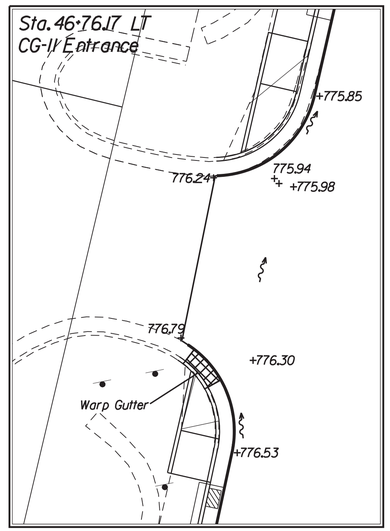

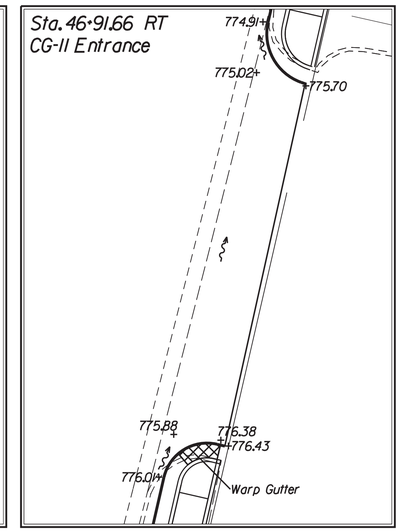

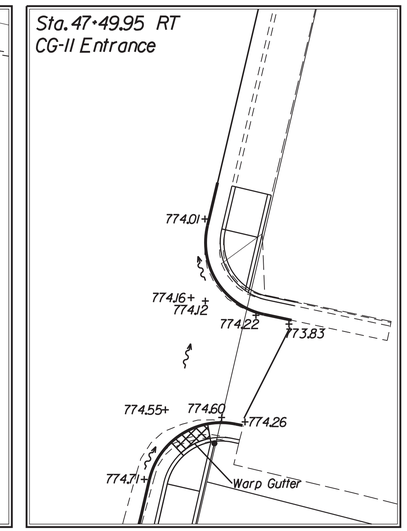

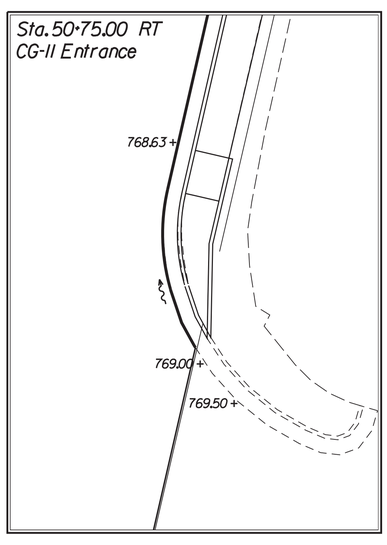

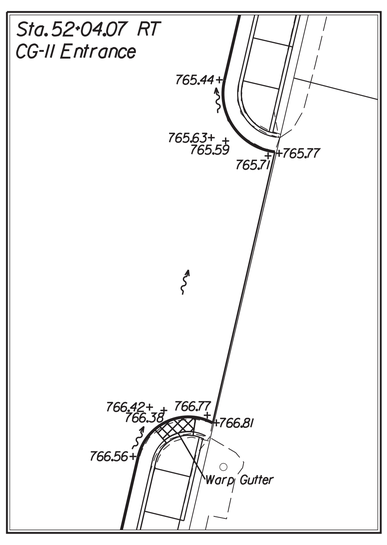

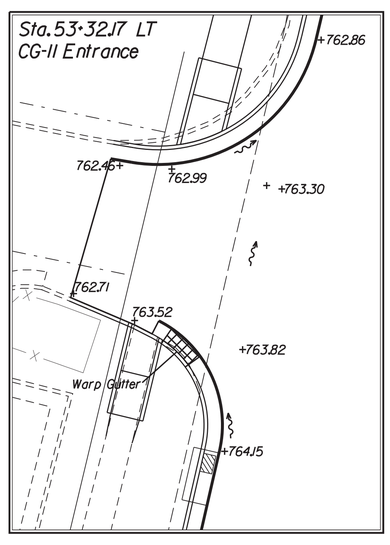

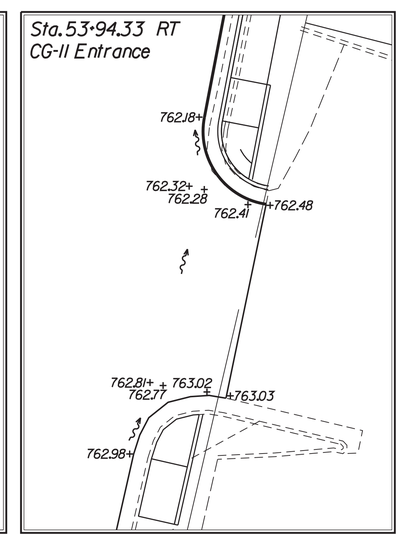

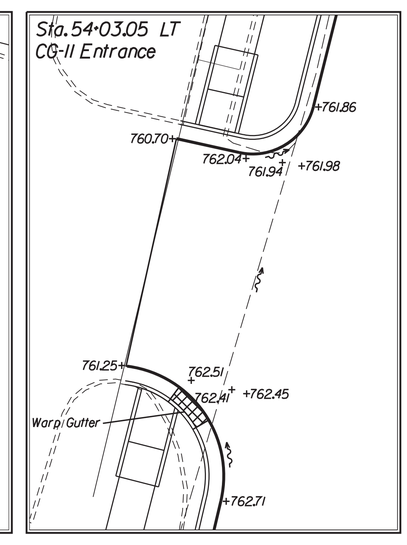

Note: Contractor shall ensure positive drainage at and around the entrances to avoid ponding.

COMMONWEALTH OF VIRGINIA
JOHN A. GIOMETTI
Lic. No. 032300
PROFESSIONAL ENGINEER
John A Giometti
2020.02.14 16:31:57-05'00'
Rinker Design Assoc., P.C.
Fredericksburg, Virginia
ROADWAY ENGINEER

REVISED	STATE	STATE ROUTE	STATE PROJECT	SHEET NO.
	VA.	11	U000-138-R04 R201,C501	1S(3)

DESIGN FEATURES RELATING TO CONSTRUCTION OR TO REGULATION AND CONTROL OF TRAFFIC MAY BE SUBJECT TO CHANGE AS DEEMED NECESSARY BY THE DEPARTMENT

SCALE 0 10'

PROJECT	SHEET NO.
U000-138-R04	1S(3)

PROJECT MANAGER Perry Eisenach, P.E. - City of Winchester (540) 667-2085
SURVEYED BY, DATE Sidney Thomas, L.S. - Rinker Design Associates (703) 368-7373, October 2014
DESIGN BY John A. Giometti, P.E. - Rinker Design Associates (703) 334-0060
SUBSURFACE UTILITY BY, DATE Matthew Bansiem - Mid Atlantic Utility Locating (703) 378-0100, August 2014

Rinker Design Associates, P.C.
Civil Engineering - Surveying - Environmental
Transportation - Land Development
Right of Way Services

Office Locations
Fredericksburg, Virginia
Main Office
4672 Mary Ann Drive
Suite 100, VA 22408
Phone: (540) 898-9000
Fax: (540) 898-9001

Winchester, Virginia
107 Nor'Wester Boulevard
Suite 100, VA 22601
Phone: (540) 667-2085
Fax: (540) 667-2086

Leesburg, Virginia
207 Plaza Drive
Suite 100, VA 20175
Phone: (703) 334-0060
Fax: (703) 334-0071

ENTRANCE GRADING DETAILS

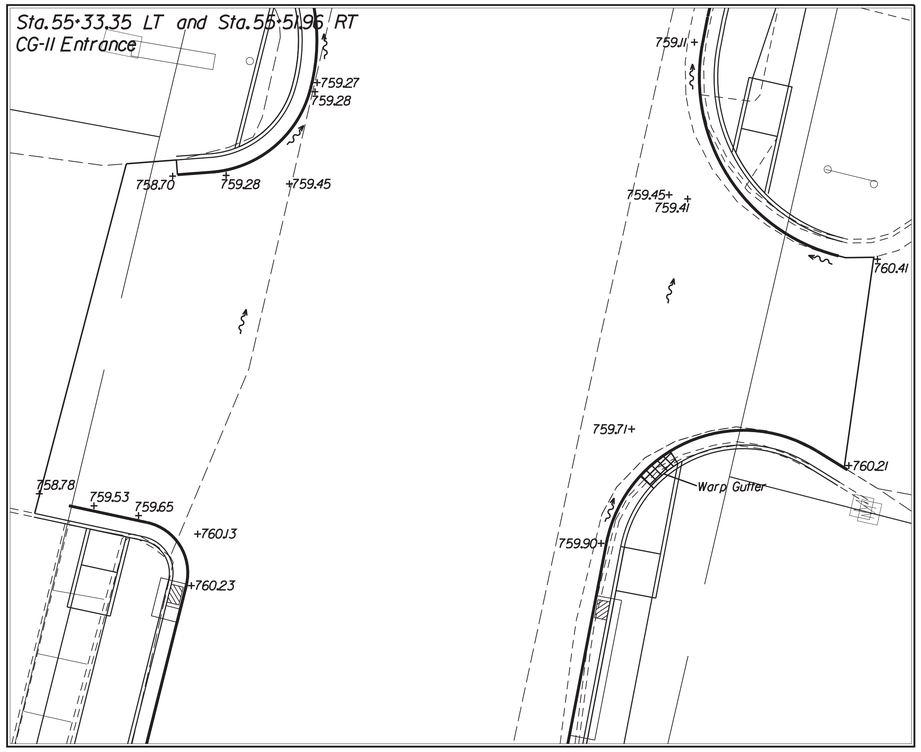

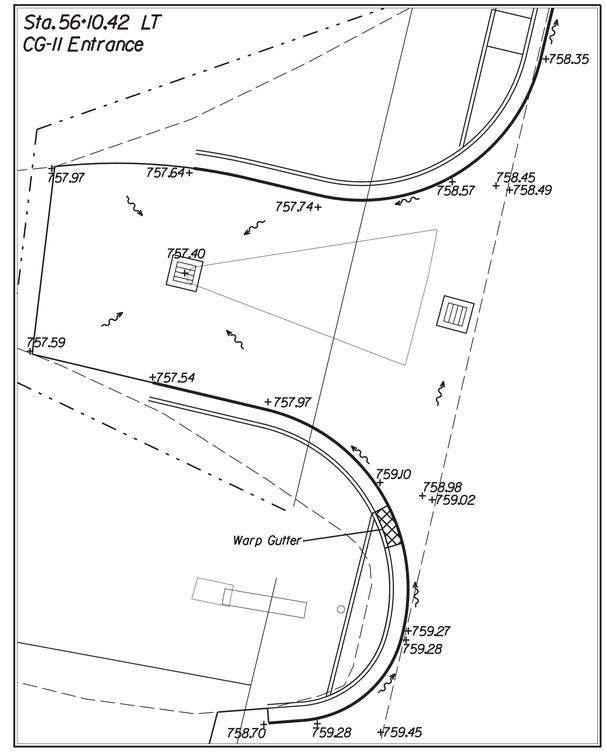

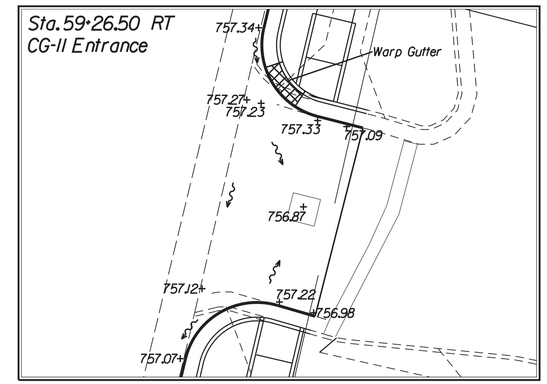

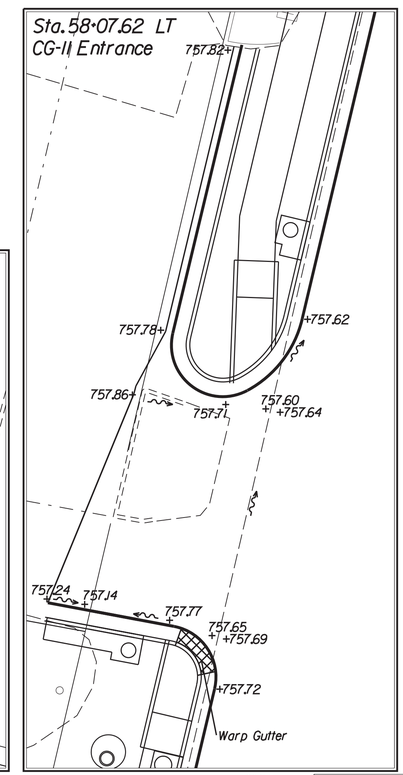

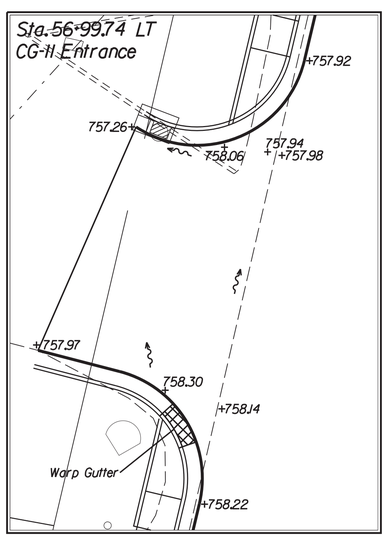

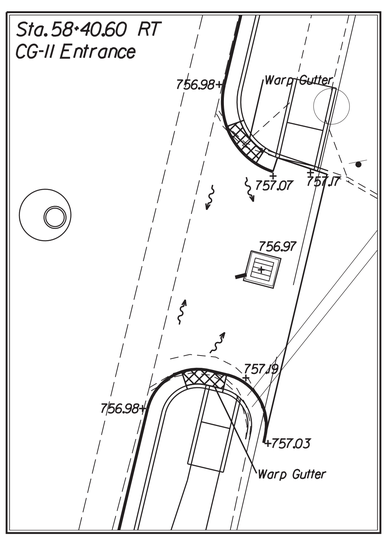

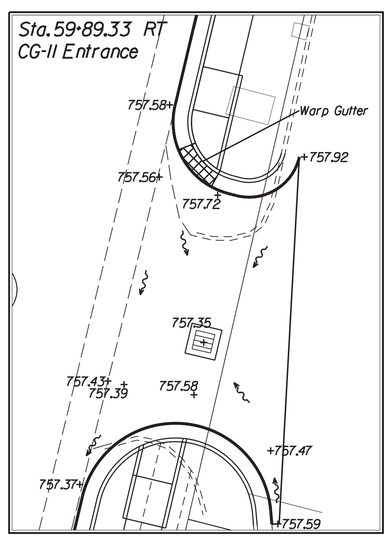

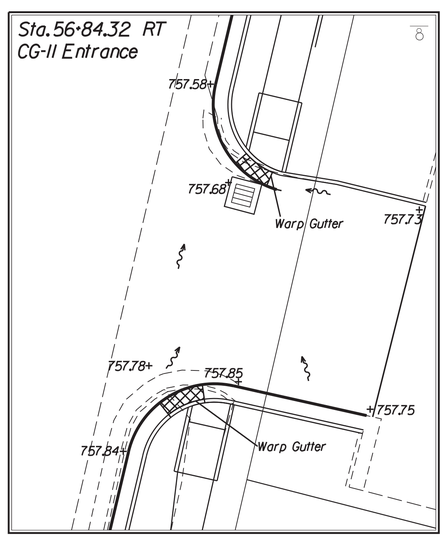

COMMONWEALTH OF VIRGINIA
JOHN A. GIOMETTI
Lic. No. 032300
PROFESSIONAL ENGINEER

John A Giometti
2020.02.14 16:25:57-05'00'

Rinker Design Assoc., P.C.
Fredericksburg, Virginia
ROADWAY ENGINEER

REVISED	STATE	STATE ROUTE	STATE PROJECT	SHEET NO.
	VA.	11	U000-138-R04 R201,C501	1S(4)

DESIGN FEATURES RELATING TO CONSTRUCTION OR TO REGULATION AND CONTROL OF TRAFFIC MAY BE SUBJECT TO CHANGE AS DEEMED NECESSARY BY THE DEPARTMENT

Note: Contractor shall ensure positive drainage at and around the entrances to avoid ponding.

SCALE 0 10'

PROJECT	SHEET NO.
U000-138-R04	1S(4)

PROJECT MANAGER Perry Eisenach, P.E. - City of Winchester (540) 667-2085
SURVEYED BY, DATE Sidney Thomas, L.S. - Rinker Design Associates (703) 368-7373, October 2014
DESIGN BY John A. Giometti, P.E. - Rinker Design Associates (703) 334-0060
SUBSURFACE UTILITY BY, DATE Matthew Bansiem - Mid Atlantic Utility Locating (703) 378-0100, August 2014

ENTRANCE GRADING DETAILS

REVISED	STATE	STATE ROUTE	STATE PROJECT	SHEET NO.
	VA.	11	U000-138-R04 R201,C501	15(5)

COMMONWEALTH OF VIRGINIA
JOHN A. GIOMETTI
Lic. No. 032300
PROFESSIONAL ENGINEER

John A Giometti
2020.02.14 16:25:05-05'00'

Rinker Design Assoc., P.C.
Fredericksburg, Virginia
ROADWAY ENGINEER

DESIGN FEATURES RELATING TO CONSTRUCTION OR TO REGULATION AND CONTROL OF TRAFFIC MAY BE SUBJECT TO CHANGE AS DEEMED NECESSARY BY THE DEPARTMENT

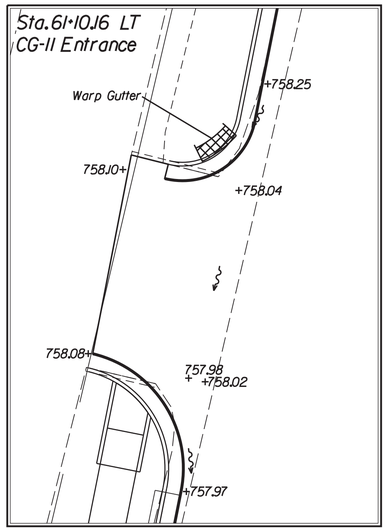

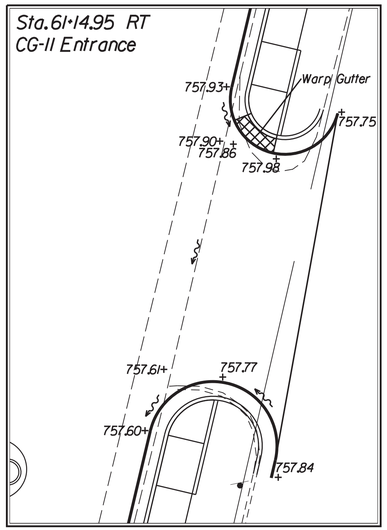

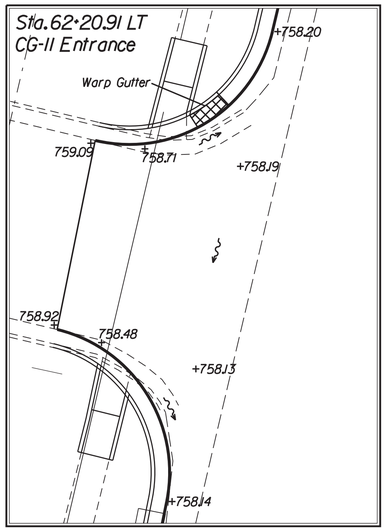

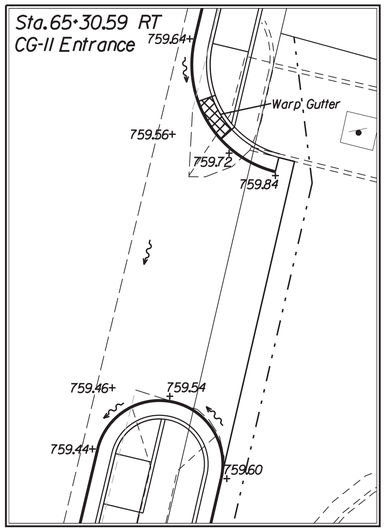

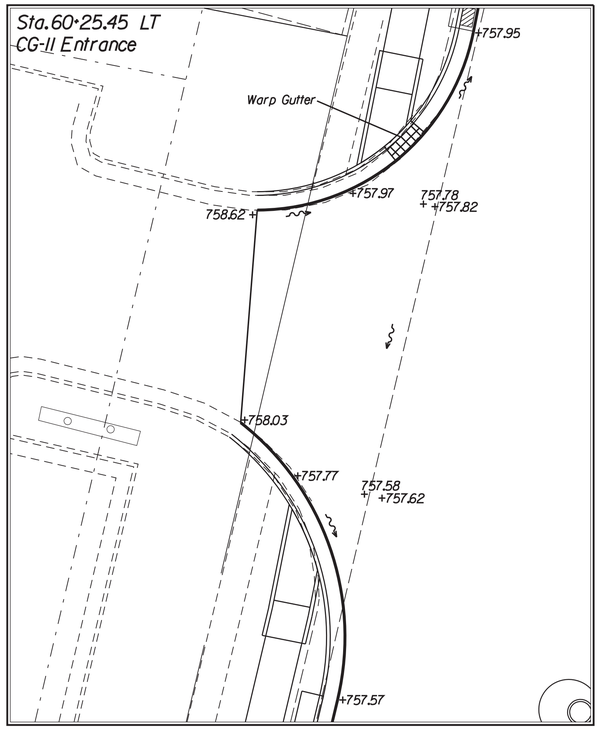

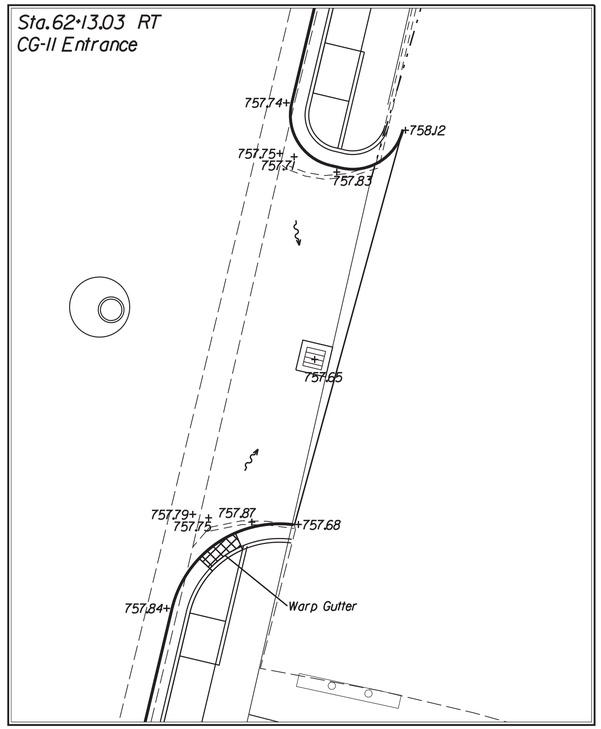

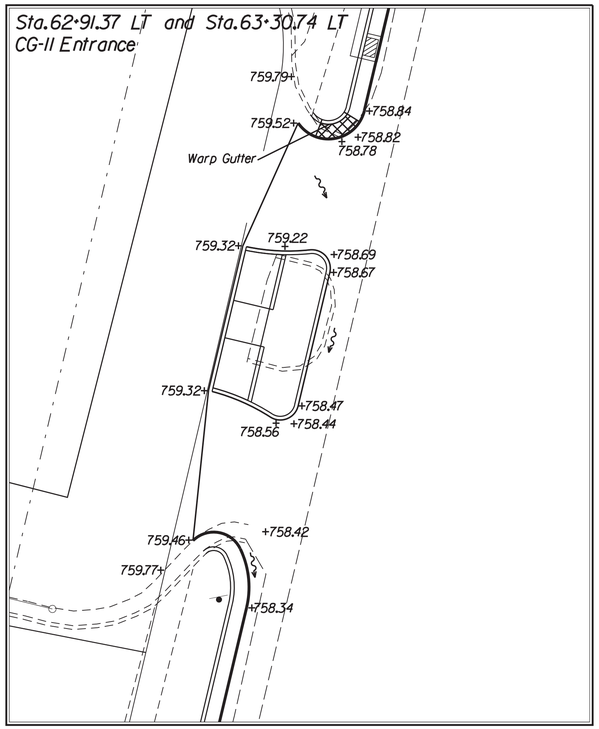

Note: Contractor shall ensure positive drainage at and around the entrances to avoid ponding.

SCALE
0 10'

PROJECT	SHEET NO.
U000-138-R04	15(5)

Rinker Design Associates, P.C.
Office Locations
Civil Engineering • Surveying • Environmental
Transportation • Land Development
Right of Way Services
Fredericksburg, VA 22401
Phone: (540) 373-2810
Fax: (540) 373-2811
Richmond, VA 23230
Phone: (804) 346-8802
Fax: (804) 346-8803
Norfolk, VA 23510
Phone: (757) 625-0100
Fax: (757) 625-0101
Roanoke, VA 24017
Phone: (540) 562-3310
Fax: (540) 562-3311
Winchester, VA 22601
Phone: (540) 667-2085
Fax: (540) 667-2086

PROJECT MANAGER Perry Eisenach, P.E. - City of Winchester (540) 667-2085
SURVEYED BY, DATE Sidney Thomas, L.S. - Rinker Design Associates (703) 368-7373, October 2014
DESIGN BY John A. Giometti, P.E. - Rinker Design Associates (703) 334-0060
SUBSURFACE UTILITY BY, DATE Matthew Bansiem - Mid Atlantic Utility Locating (703) 378-0100, August 2014

Office Locations
Rinker Design Associates, P.C.
Civil Engineering - Surveying - Environmental
Transportation - Land Development
Right of Way Services
Fredericksburg, VA 22401
Phone: (540) 373-2300
Fax: (540) 373-2304
Reston, VA 20190
Phone: (703) 334-0060
Fax: (703) 334-0061
Front Royal, VA 22630
Phone: (540) 635-7170
Fax: (540) 635-7171
www.rinkerdesign.com

ENTRANCE GRADING DETAILS

COMMONWEALTH OF VIRGINIA
JOHN A. GIOMETTI
Lic. No. 032300
PROFESSIONAL ENGINEER

John A Giometti
2020.02.14 16:24:39-05'00'

Rinker Design Assoc., P.C.
Fredericksburg, Virginia
ROADWAY ENGINEER

REVISED	STATE	STATE ROUTE	STATE PROJECT	SHEET NO.
	VA.	11	U000-138-R04 R201,C501	1S(6)

DESIGN FEATURES RELATING TO CONSTRUCTION OR TO REGULATION AND CONTROL OF TRAFFIC MAY BE SUBJECT TO CHANGE AS DEEMED NECESSARY BY THE DEPARTMENT

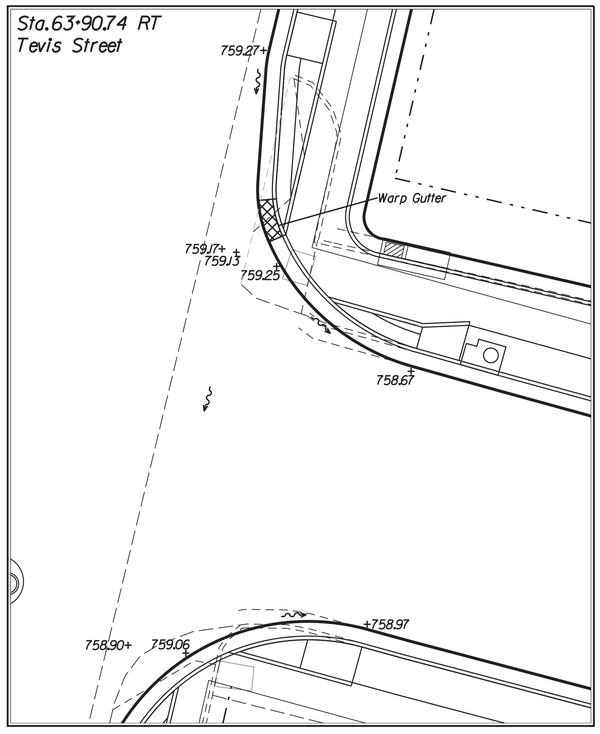

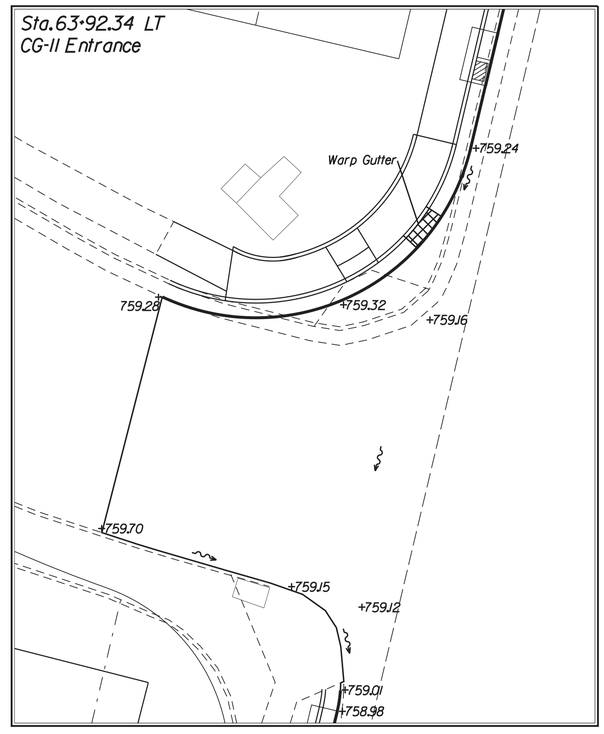

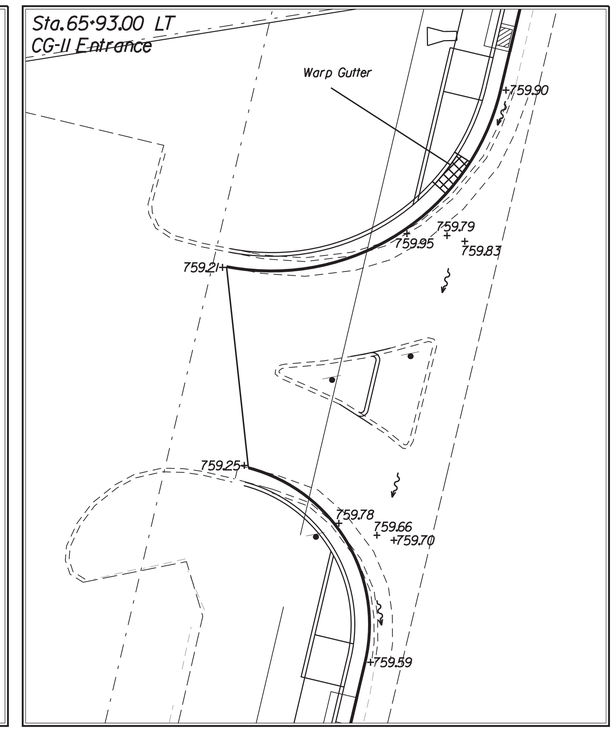

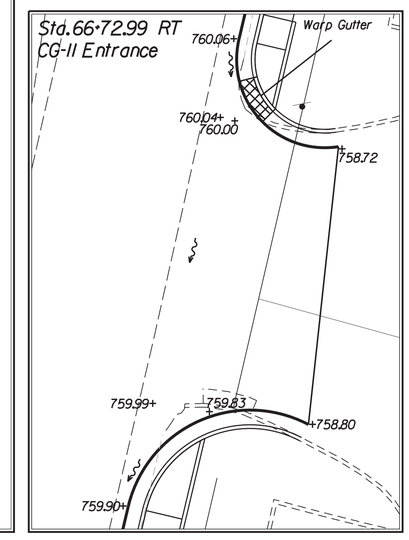

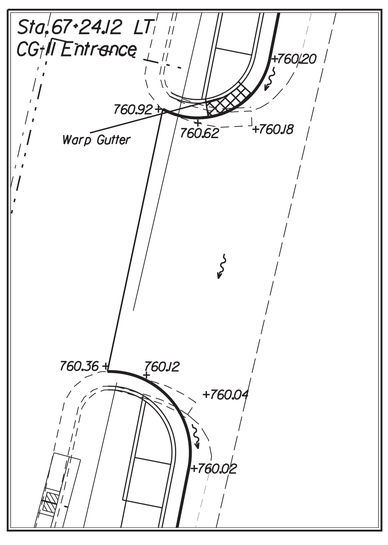

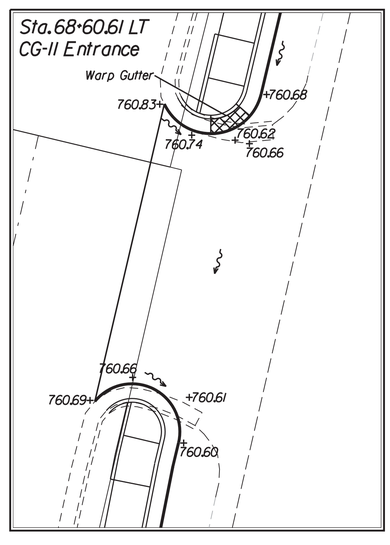

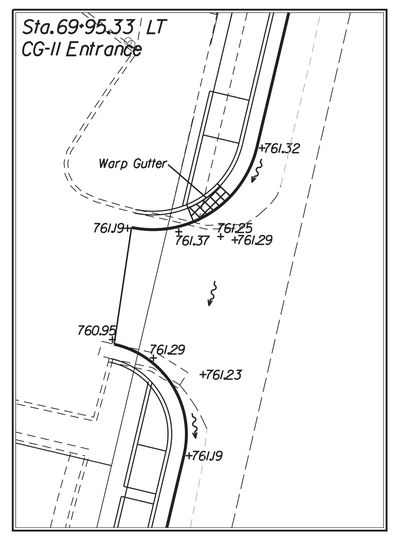

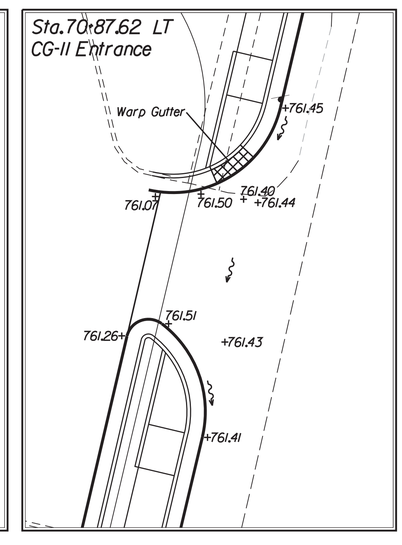

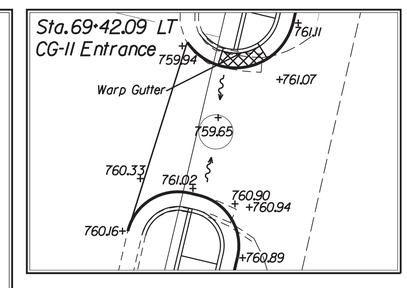

Note: Contractor shall ensure positive drainage at and around the entrances to avoid ponding.

SCALE
0 10'

PROJECT	SHEET NO.
U000-138-R04	1S(6)

PROJECT MANAGER Perry Eisenach, P.E. - City of Winchester (540) 667-2085
SURVEYED BY, DATE Sidney Thomas, L.S. - Rinker Design Associates (703) 368-7373, October 2014
DESIGN BY John A. Giometti, P.E. - Rinker Design Associates (703) 334-0060
SUBSURFACE UTILITY BY, DATE Matthew Bansiem - Mid Atlantic Utility Locating (703) 378-0100, August 2014

Office Locations
Corporate Headquarters
4670 Corporation Drive
Suite 100
Fairfax, VA 22030
Phone: (703) 334-0060
Fax: (703) 352-0265
Fredericksburg Office
405 Fairview Boulevard
Suite 100
Fredericksburg, VA 22401
Phone: (540) 373-8000
Fax: (540) 373-0000
Richmond Office
2017 Maple Avenue Extension
Suite 100
Richmond, VA 23227
Phone: (804) 262-8000
Fax: (804) 262-8001
Rinker Design Associates, P.C.
Civil Engineering • Surveying • Environmental
Transportation • Land Development
Right of Way Services

ENTRANCE GRADING DETAILS

COMMONWEALTH OF VIRGINIA
JOHN A. GIOMETTI
Lic. No. 032300
PROFESSIONAL ENGINEER

John A Giometti
2020.02.14 16:24:16-05'00'

Rinker Design Assoc., P.C.
Fredericksburg, Virginia
ROADWAY ENGINEER

REVISED	STATE	STATE ROUTE	STATE PROJECT	SHEET NO.
	VA.	11	U000-138-R04 R201,C501	1S(7)

DESIGN FEATURES RELATING TO CONSTRUCTION OR TO REGULATION AND CONTROL OF TRAFFIC MAY BE SUBJECT TO CHANGE AS DEEMED NECESSARY BY THE DEPARTMENT

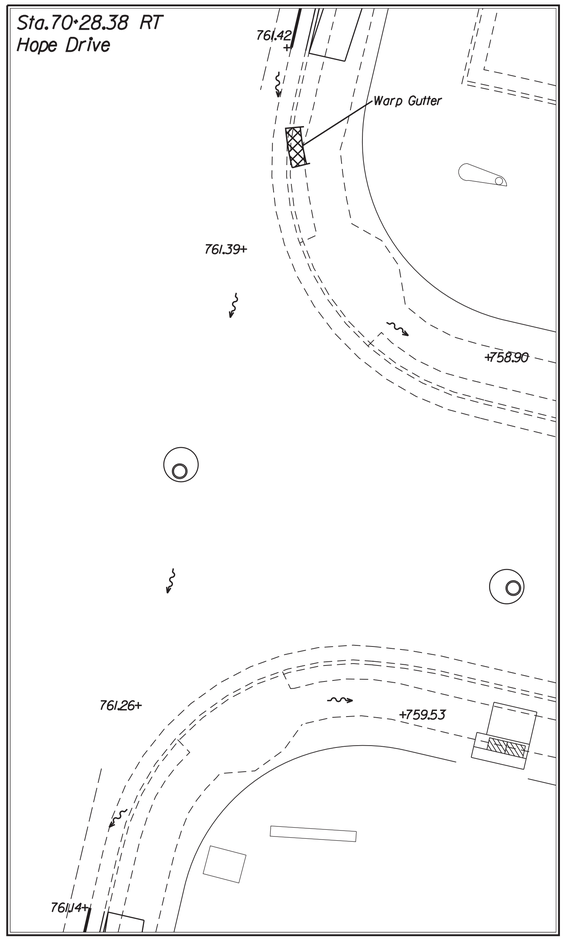

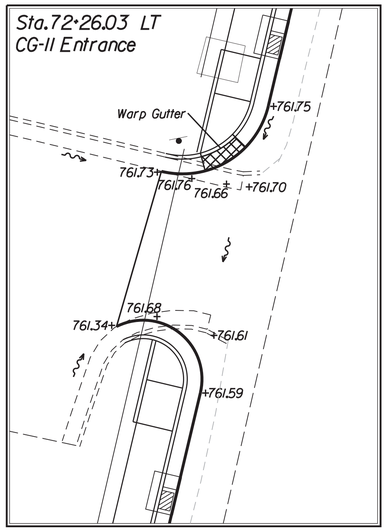

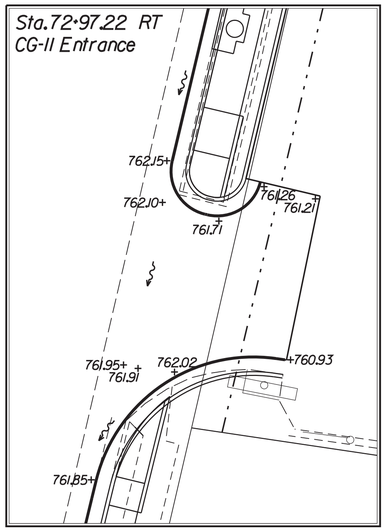

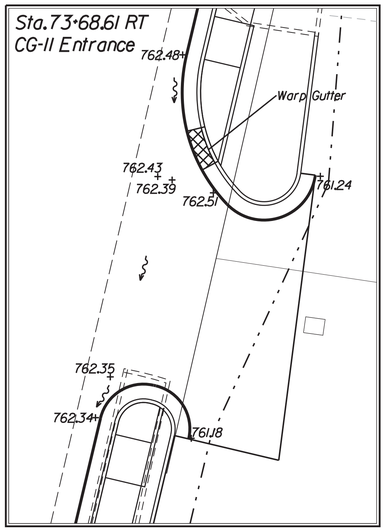

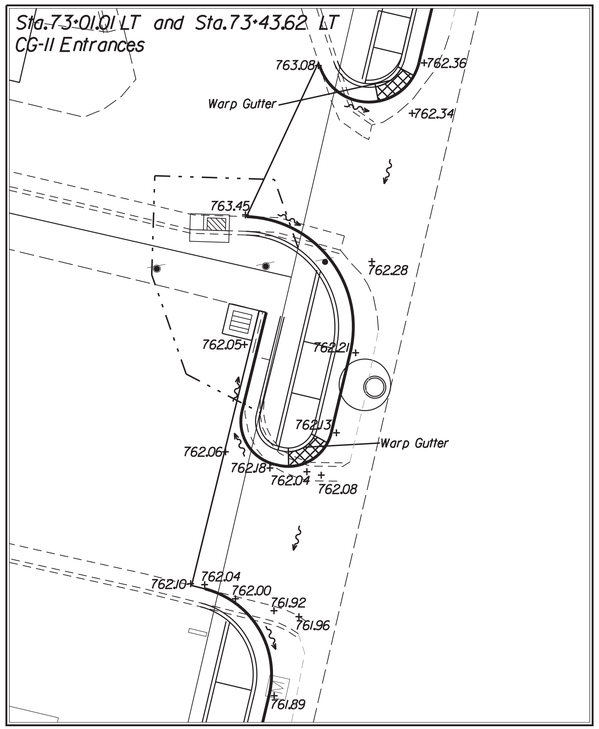

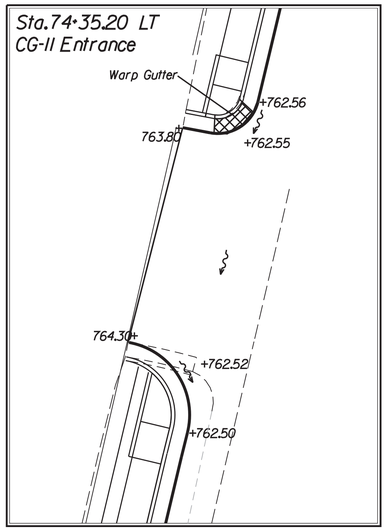

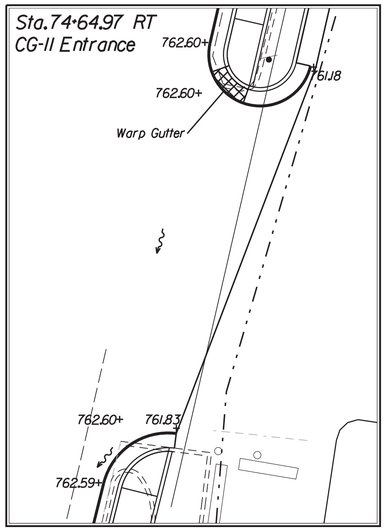

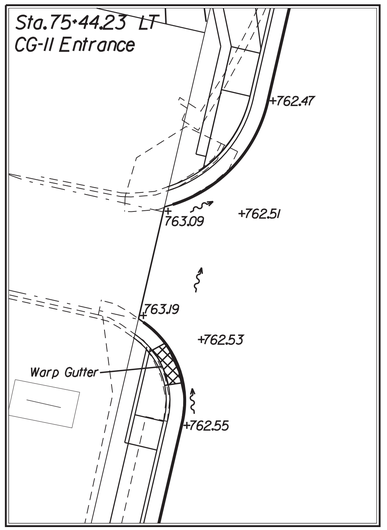

Note: Contractor shall ensure positive drainage at and around the entrances to avoid ponding.

SCALE
0 10'

PROJECT	SHEET NO.
U000-138-R04	1S(7)

2/14/2020
9:04:57 AM

d1030130011s(8).dgn
Plotted By: mbeales

PROJECT MANAGER Perry Eisenach, P.E. - City of Winchester (540) 667-2085
SURVEYED BY, DATE Sidney Thomas, L.S. - Rinker Design Associates (703) 368-7373, October 2014
DESIGN BY John A. Giometti, P.E. - Rinker Design Associates (703) 334-0060
SUBSURFACE UTILITY BY, DATE Matthew Bansiem - Mid Atlantic Utility Locating (703) 378-0100, August 2014

Office Locations
Corporate Headquarters: 4670 Corporation Drive, Suite 100, Fairfax, VA 22030, Phone: (703) 334-0060, Fax: (703) 273-2544
4670 Corporation Drive, Suite 100, Fairfax, VA 22030, Phone: (703) 334-0060, Fax: (703) 273-2544
207 Mapp Drive, Suite 101, Fredericksburg, VA 22407, Phone: (540) 373-3210, Fax: (540) 373-4417
Rinker Design Associates, P.C.
Civil Engineering - Surveying - Land Planning
Transportation - Environmental
Right of Way Services
SINCE ESTABLISHED IN W.O.

ENTRANCE GRADING DETAILS

COMMONWEALTH OF VIRGINIA
JOHN A. GIOMETTI
Lic. No. 032300
PROFESSIONAL ENGINEER

John A Giometti
2020.02.14 16:23:51-05'00'

Rinker Design Assoc., P.C.
Fredericksburg, Virginia
ROADWAY ENGINEER

REVISED	STATE	STATE ROUTE	STATE PROJECT	SHEET NO.
	VA.	11	U000-138-R04 R201,C501	1S(8)

DESIGN FEATURES RELATING TO CONSTRUCTION OR TO REGULATION AND CONTROL OF TRAFFIC MAY BE SUBJECT TO CHANGE AS DEEMED NECESSARY BY THE DEPARTMENT

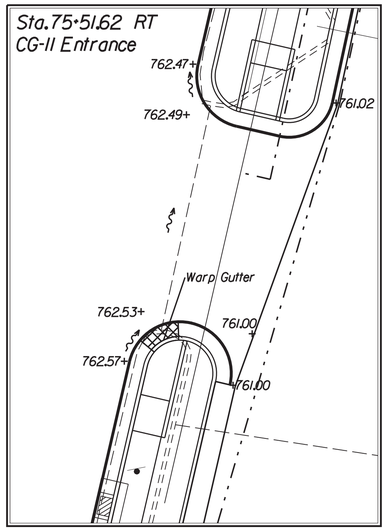

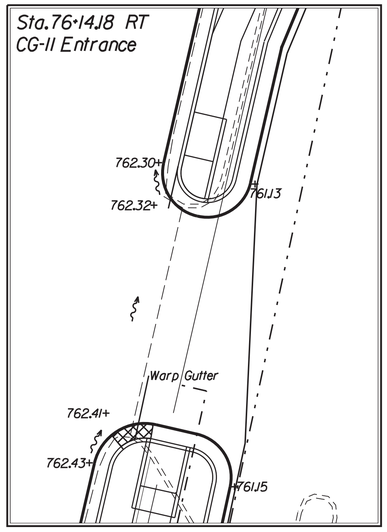

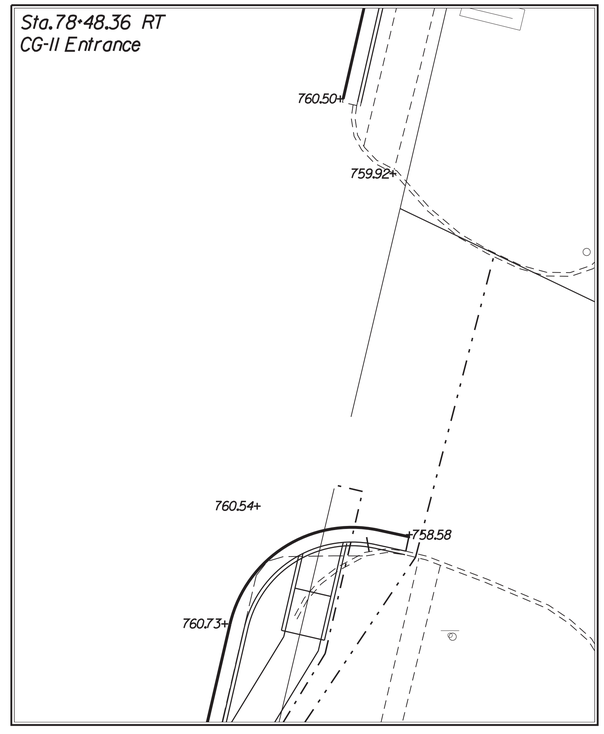

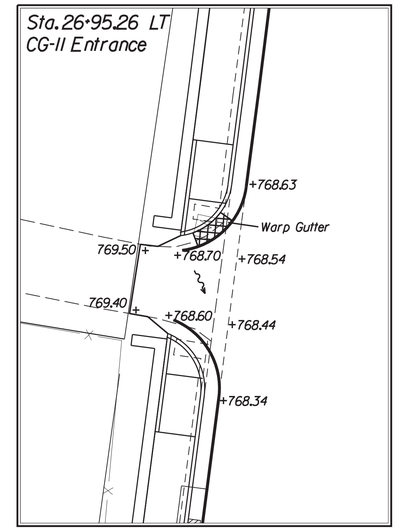

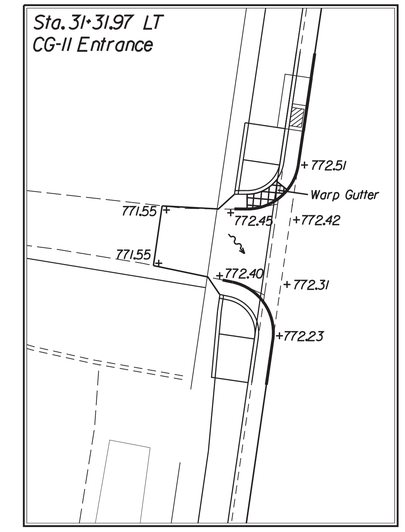

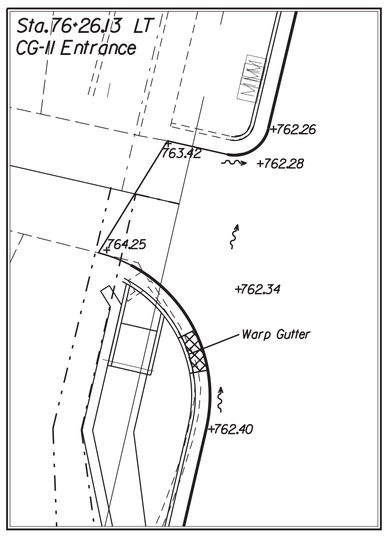

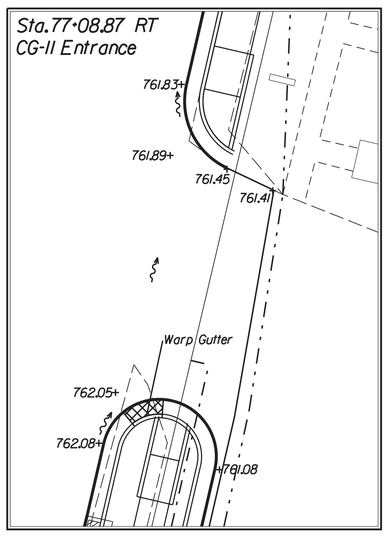

Note: Contractor shall ensure positive drainage at and around the entrances to avoid ponding.

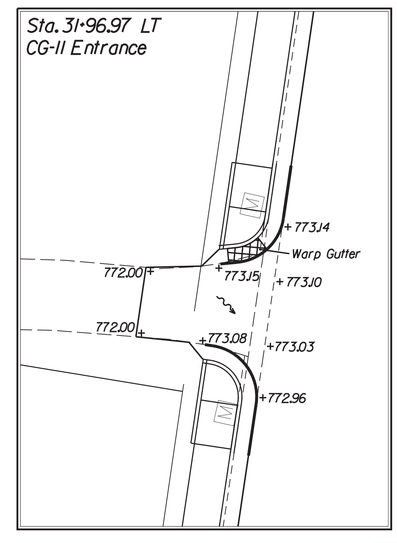

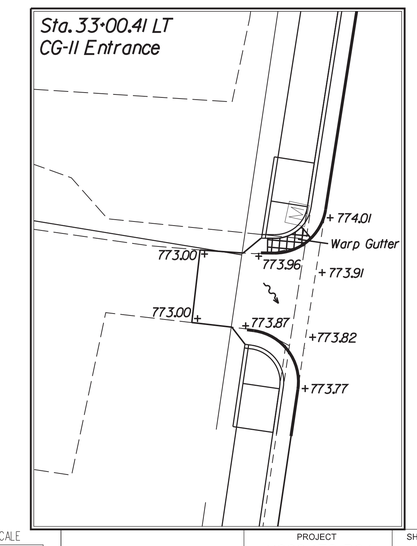

SCALE
0 10'

PROJECT	SHEET NO.
U000-138-R04	1S(8)

REVISED	STATE	STATE ROUTE	STATE PROJECT	SHEET NO.
	VA.	11	U000-138-R04 C501	2

DESIGN FEATURES RELATING TO CONSTRUCTION OR TO REGULATION AND CONTROL OF TRAFFIC MAY BE SUBJECT TO CHANGE AS DEEMED NECESSARY BY THE DEPARTMENT

Rinker Design Associates, P.C.
Civil Engineering - Surveying - Land Planning
Transportation - Environmental
Right of Way Services
www.RDAcivil.com

Office Locations
9385 Discovery Boulevard, Suite 200, Manassas, VA 20109, Phone: (703) 368-7373, Fax: (703) 257-5443
4301 Dominion Boulevard, Suite 100, Glen Allen, VA 23060, Phone: (804) 612-0665, Fax: (804) 612-0668
927 Maple Grove Drive, Suite 105, Fredericksburg, VA 22407, Phone: (540) 548-4470, Fax: (540) 548-4471

PROJECT MANAGER Perry Eisenach, P.E. - City of Winchester (540) 667-2085
SURVEYED BY, DATE Sidney Thomas, L.S. - Rinker Design Associates (703) 368-7373, October 2014
DESIGN BY John A. Giometti, P.E. - Rinker Design Associates (703) 334-0060
SUBSURFACE UTILITY BY, DATE Matthew Ranslem - Mid Atlantic Utility Locating (703) 378-0100, August 2014

GENERAL NOTES

GRADING

G-1 The grade line denotes top of finished pavement unless shown otherwise on typical sections or plans.

G-6 All regular excavation, borrow excavation and embankment material used to construct embankments for this project shall meet a minimum CBR value of 10 as determined by VTM-8, shall not include USCS CH or MH soils unless stabilized with lime (per VTM-11) or cement (per VTM-72), shall be in accordance with Section 303.04(h) of the 2016 Road and Bridge Specifications or as approved by the District Materials Engineer. No. 10 screenings may be used as borrow material or embankment in accordance with the Special Provision for Use of Number 10 Screenings and will be paid for as borrow material or embankment.
Project soils at the following locations are not expected to meet the above requirements:
Station 16+00 to Station 22+10
Station 24+90 to Station 39+00
Station 501+00 to Station 507+70
Shale, siltstone, claystone and other potentially nondurable rock materials shall meet the requirements of the Special Provision for Shale Fill.

DRAINAGE

D-1 The horizontal location of all drainage structures shown on these plans is approximate only, with the exception of structures showing specific stations, special design bridges and storm sewer systems.

D-2 The horizontal location and invert elevations shown for proposed culverts and storm sewer outfall pipes are based on existing survey data and required design criteria. If during construction, it is found that the horizontal location or invert elevations shown on the plans differ significantly from the horizontal location or elevations of the stream or swale in which the culvert or storm sewer outfall pipe is to be placed, the Engineer shall confer with, and get approval from, the applicable District Drainage Engineer before installing the culvert or storm sewer outfall pipe.

D-3 The "H" dimensions shown on plans for drop inlets and junction boxes and the "L.F." dimensions shown for manholes are for estimating purposes and are based on the proposed invert elevations shown for the structure and the anticipated top (rim) elevation based on existing or proposed finished grade. The actual "H" or "L.F." dimensions are to be determined by the contractor from field conditions.

D-5 At locations where Structural Plate Steel Pipe or Pipe Arch with a concrete invert is required or is allowable as an option to Corrugated Steel Pipe or Pipe Arch, the concrete invert is to be field applied and shall cover, at a minimum, the bottom 25% of the circumference of a circular shape structure or the bottom and corner plates of an arch shape structure. As an option to providing the concrete invert, the plates along the bottom 25% (minimum) of the circumference of the Structural Plate Steel Pipe or the bottom and corner plates (minimum) of the Structural Plate Steel Pipe Arch shall be a minimum of two sheet thickness (gages) heavier than the sheet thickness (gage) indicated in the applicable VDOT Road and Bridge Standard PC-1 for the specified height of cover for the structure. Example: For a pipe with height of cover requiring 0.109" sheet thickness (12 gage) plates, the bottom plates shall be 0.168" sheet thickness (8 gage). The sheet thickness (gage) of the remainder of the pipe plates shall either conform to those specified in Standard PC-1 for the applicable height of cover or to the heavier plates used in the bottom of the pipe.

D-6 Pipes shall conform to any of the allowable types shown on sheet number 17(13), within the applicable height of cover limitations.
For strength, sheet thickness, or class designation; available sizes; height of cover limitations;and other restrictions for a particular pipe type or height of cover, see the VDOT Road and Bridge Standard PC-1. Structural plate pipe may be substituted for corrugated pipe of the same size, provided the substitution complies with the applicable sections of the VDOT Road and Bridge Standards PC-1.

D-10 The proposed riprap may be omitted by the Engineer if the slope designated for placement of riprap is found to be comprised of solid rock or closely consolidated boulders with soundness, size and weight equal to, or exceeding, the specifications for the proposed riprap.

D-12 All existing drainage facilities labeled "To Be Abandoned" shall be left in place, backfilled and plugged in accordance with the VDOT Road and Bridge Standard PP-1. Basis of Payment will be C.Y. of Flowable Backfill.

D-13 Existing drainage facilities being utilized as a part of the drainage system, and designated on the plans "To Be Cleaned Out" shall be cleaned as directed by the Engineer. The cost incidental to this shall be included in the contract price for other items.

D-16 When CG-6 or CG-7 is specified on a radius (such as at a street inter-section), the Engineer may approve a decrease in the cross slope of the gutter to facilitate proper drainage.

D-17 St'd. SL-1 Safety Slab locations are based on the assumed use of precast structures. If cast-in-place structures are utilized, and the interior chamber dimensions (length and width, or diameter) are less than 4 feet, the safety slabs shall not be installed.

PAVEMENT

P-2 The pavement materials on this project will be paid for on a tonnage basis. The weight will vary in accordance with the specific gravity of the aggregates and the asphaltic content of the mix actually used to secure the design depth. The weight of the asphalt concrete is based on 95% of the theoretical maximum density.

INCIDENTALS

I-6 Certain trees shall be preserved as noted on plans or as directed by the Engineer.

I-7 Where Standard slope roundoffs would damage trees, bushes or other de-sirable vegetation, they shall be omitted when so ordered by the Engineer.

INCIDENTALS

I-9 When no centerline alignment is shown for a proposed entrance, the entrance shall be constructed in the same location as the existing entrance.

I-16 The "underground utilities" survey data on this project has been provided by consultant and copies are available from the Department.

I-17 For method of constructing Straight-Line Taper Lanes in curb and/or curb and gutter sections, see typical details on Sheet 2A.

I-18 All pavement markings and traffic flow arrows shown on the roadway con-struction plans are schematic only. The actual location and application of pavement markings shall be in accordance with Section 704 of the applicable VDOT Road and Bridge Specifications, MUTCD, sequence of construction/traffic control plans, pavement marking plan sheets 19 thru 19(16) and as directed by the Engineer.

I-20 The Official Electronic PDF Version of the plans will override the paper copies or prints of specific layers.

Portions of this plan assembly have been CADD generated. To assist in the preparation of the bid and construction of the project, Microstation format (.dgn) files will be made available to the prime contractor during bids and after award of the contract.

I-21 All electronic plan assemblies will include the construction plans in two formats: PDF files and MicroStation format (.dgn) files. Only the PDF files will be considered as part of the official plan assembly.

The MicroStation format (.dgn) files are furnished only as information for the contractor. These plans are developed in layers (levels) to aid in readability. However, the construction items may or may not be in the proper layering scheme as described in the VDOT CADD Manual. The MicroStation files will only match the scanned files if all required levels are turned on. A Microstation Software license is required to be able to read these files.

ENVIRONMENTAL

Tree Removal AAM 1. Avoid tree removal in excess of what is required to implement the project safely.

Tree Removal AAM 2. The removal of trees is restricted to the period September 15 through April 15 to protect the threatened and endangered bat species, unless a different time-of-year (TOYR) restriction has been put in place by the US Fish and Wildlife Service by the time this project goes to construction. If a different TOYR is valid by the date of construction, that TOYR will be required.

Tree Removal AAM 3. Ensure tree removal is limited to that specified in project plans. Install bright colored flagging/fencing prior to any tree clearing to ensure contractors stay within clearing limits. Ensure that contractors understand clearing limits and how they are marked in the field.

Tree Removal AAM 4. Do not cut down documented Indiana bat or NLEB roosts (that are still suitable for roosting) or trees within 0.25 miles of roosts, or documented foraging habitat at any time of year. At this time, there are no known roosts or foraging habitats known within 0.25 miles of the project area, but this fact should be rechecked prior to construction.

Lighting AAM 1. Temporary lighting must be directed away from suitable bat habitat during the active season. For the Valley Drive project, avoid directing lighting at any of the large trees or groups of trees or open fields, or structures such as barns and brdges.

Lighting AAM 2. Use downward-facing, full cut-off lens lights, and direct lighting away from suitable habitat when installing new or replacing existing permanent lights.

Hibernaculum AAM 1. For projects located within karst areas, on-site personnel will use best management practices,secondary containment measures, or other standard spill prevention and countermeasures to avoid impacts to possible hibernacula. Where practicable, a 300- foot buffer will be employed to separate fueling areas and other major containment risk activities from caves, sinkholes, losing streams, and springs in karst topography

MATERIALS

M-1 Work included in these plans shall be performed in accordance with the Special Provision for Protection of Karst Habitat. In the event a cave, sinkhole, spring, blowhole, swallet or other karst feature is observed within the project limits or is encountered during construction, the Contractor shall immediately contact the VDOT Project Inspector and the VDOT District Environmental Manager at (540) 332-9101.

M-2 Note: In the event it becomes necessary to use blasting techniques to loosen, break and/or excavate bedrock, the Special Provision for Controlled Blasting shall apply.

M-3 Pipe backfill shall be performed in accordance with VDOT Standard PB-1 and Section 302.03(a)2.g. of the Specifications unless noted herein. Regular Backfill material within the limits of roadway embankments and under existing or proposed roadway shall meet a minimum CBR value of 15.0 as determined by VTM-8. No. 10 screenings may be used as Regular Backfill or bedding material in accordance with the Special Provision for Use of Number 10 Screenings.
Ground line shall be considered the top of trench at the time of pipe installation. When pipe does not project above ground line, Regular Backfill shall extend to the top of the pipe trench in fills or subgrade in cuts. Outlet pipes for storm water management basins shall be installed as noted on the plans. The cost of furnishing, placing, and compacting the Regular Backfill, bedding material, and disposing of unsuitable material excavated from the trench shall be included in the price of the pipe and will not be measured and for separate payment.

M-4 Tie-in to existing pavements along mainline and connectors shall be milled to a depth matching the new surface asphalt course in accordance with Road and Bridge Standard ACOT-1. Widening shall conform to Road and Bridge Standard WP-2. Sawcut is expected to be approximately four (4) to six (6) inches in depth along US 11 Northbound, approximately five (5) to twelve (12) inches in depth along US 11 Southbound, and approximately three (3) to six (6) inches in depth along Tevis Street mainline.

EROSION AND SEDIMENT CONTROL (ESC)

E-1 If the removal of Brush Silt Barrier is specified by the plans or required by the Engineer, the cost of removal and disposal of brush shall be in accordance with Section 109 of the applicable VDOT Road and Bridge Specifications.

E-2 Rock for Check Dams, Inlet Protection, Erosion Control Stone and Riprap shall be in accordance with Section 203 and Section 414 of the applicable VDOT Road and Bridge Specifications.

E-3 The following symbols are used to depict Erosion Control items in the plan assembly:

Symbol	Description
EC-2, Ty. 1 / EC-2, Ty. 2 / EC-2, Ty. 3 / EC-2, Ty. 4	Denotes Rolled Erosion Control Product, Temporary, St'd. EC-2 Type 1, 2, 3 or 4
EC-3, Ty. 1 / EC-3, Ty. 2 / EC-3, Ty. 3	Denotes Rolled Erosion Control Product, Permanent, St'd. EC-3 Type 1, 2 or 3
TSF	Denotes Temporary Silt Fence, St'd EC-5 Type A
TDC	Denotes Temporary Diversion Channel, St'd EC-12
DD	Denotes Temporary Diversion Dike, St'd EC-9
TC-I	Denotes Turbidity Curtain, Type - Impervious
TC-P	Denotes Turbidity Curtain, Type - Pervious
RCD-1	Denotes Rock Check Dam, Type I; St'd EC-4
RCD-2	Denotes Rock Check Dam, Type II; St'd EC-4
IP-A	Denotes Inlet Protection, Type A; St'd EC-6
IP-B	Denotes Inlet Protection, Type B; St'd EC-6
TSI	Denotes Slope Interrupter; St'd EC-15
IP-C	Denotes Inlet Protection, Type C; St'd EC-6

CONSTRUCTION GENERAL NOTES

1 All work and materials shall conform to the current standards of the City of Winchester, Virginia, the Virginia Department of Transportion (VDOT), the Virginia Uniform Statewide Building Code, and the rules and regulations of the Americans with Disabilities Act, where applicable.

2 Erosion and sediment control installation and maintenance shall conform to the standards and specification of the Commonwealth of Virginia and the City of Winchester, Virginia, where applicable.

3 It shall be the responsibility of the contractor to notify "Miss Utility" at 811 at least three (3) working days prior to commencement of any land disturbing activity.

4 All existing utilities have been shown based upon the best available information. However, there may be existing utilities which are not shown and should be located. Therefore, it shall be the responsibility of the contractor to verify the location of all existing utilities prior to construction. Verification shall be done by way of a field survey or excavated test pits. Any discrepancies between these plans and the actual field conditions shall be reported immediately to the engineer and the City of Winchester, Virginia.

5 It shall be the responsibility of the contractor to obtain all permits and pay all applicable fees that may be necessary for construction prior to commencement of work. An approved set of construction documents shall be present on the site at all times.

6 Topographic information was derived based upon NAVD 1988 Datum by a field survey performed by the Survey department of Rinker Design Associates, P.C. and an aerial survey performed by Quantum Spatial in August 2014 for the Hope Drive Extension Relaignment and Safety Improvement project. A one foot (1') contour interval was established for this project. Contractor to confirm the vertical elevation benchmark information with the surveyor prior to commencement of the stake-out of this project.

7 Geotechnical Borings were performed by Geo-Technology Associates, Inc. in April 2017.

8 All property corner markers disturbed or otherwise obscured by construction are to be replaced and verified by a certified land surveyor at the Contractor's expense.

9 Pavement construction and material items called for on the plans refer to VDOT standards and specifications.

10 The Contractor shall obtain permission from adjoining property owners prior to conducting any off-site construction activities.

11 Provide "as-built" drawings for all improvements as required by the City of Winchester. Coordinate the scope and format of the as-builts with the City of Winchester Utility Dept. prior ot beginning construction.

12 Construction of this project may not begin until plans have been approved and a pre-construction meeting has been held.

MATERIALS (cont'd.)

Note: The quantities of materials estimated for this project were computed using the following bulk density factors:

Asph. Conc., Type SM-9.5D	2.0 tons/cubic yard	No. 25/26	2.0 tons/cubic yard
Asph. Conc., Type IM-19.0D	2.0 tons/cubic yard	Select Material, Type 1	2.0 tons/cubic yard
Asph. Conc., Type BM-25.0A	2.2 tons/cubic yard	No. 57	1.3 tons/cubic yard
Riprap (all types)	1.8 tons/cubic yard	Bedding Material	1.4 tons/cubic yard
No. 21A/21B	2.0 tons/cubic yard	Class I Backfill Material	2.0 tons/cubic yard

Note: The Contractor shall contact the Engineer to determine the source-specific bulk density conversion factors for aggregate materials that shall be used for computing actual quantities for payment purposes.

PROJECT MANAGER Perry Eisenach, P.E. - City of Winchester (540) 667-2085
SURVEYED BY, DATE Sidney Thomas, L.S. - Rinker Design Associates (703) 368-7373, October 2014
DESIGN BY John A. Giometti, P.E. - Rinker Design Associates (703) 334-0060
SUBSURFACE UTILITY BY, DATE Matthew Bansiem - Mid Atlantic Utility Locating (703) 378-0100, August 2014

Office Locations
Rinker Design Associates, P.C.
Civil Engineering - Surveying - Transportation
Environmental - Transportation - Right of Way Services
SINCE INCORPORATION 1988
Fredericksburg, VA 22401 Phone: (540) 373-3000 Fax: (540) 373-3001
Sterling, VA 20164 Phone: (703) 834-0060 Fax: (703) 834-0061
Richmond, VA 23220 Phone: (804) 225-0000 Fax: (804) 225-0001
Roanoke, VA 24017 Phone: (540) 342-7300 Fax: (540) 342-7301

TYPICAL SECTIONS

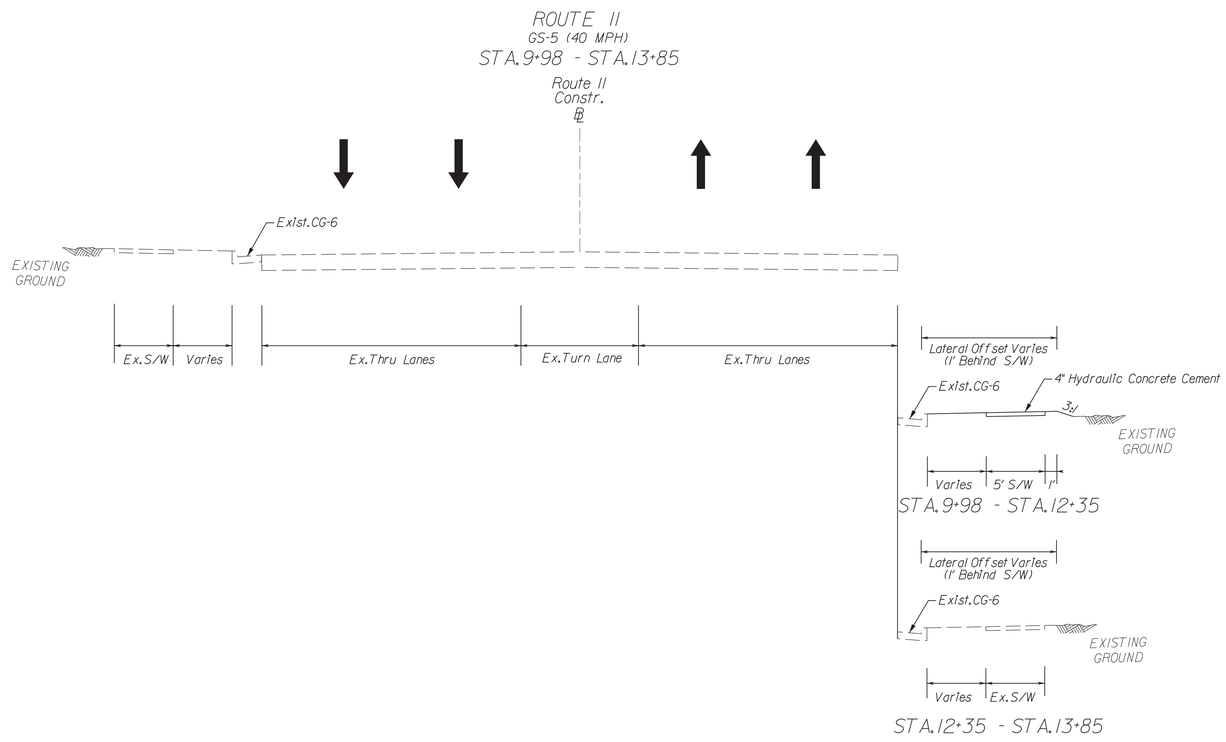

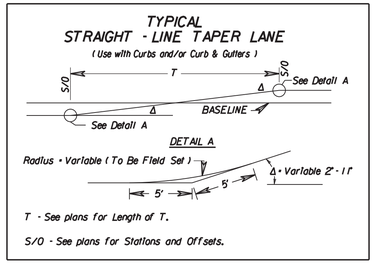

John A Giometti
2020.02.14 16:56:59-05'00'
Rinker Design Assoc., P.C.
Fredericksburg, Virginia
ROADWAY ENGINEER

REVISED	STATE	STATE ROUTE	STATE PROJECT	SHEET NO.
	VA.	11	U000-138-R04 R201,C501	2A

DESIGN FEATURES RELATING TO CONSTRUCTION OR TO REGULATION AND CONTROL OF TRAFFIC MAY BE SUBJECT TO CHANGE AS DEEMED NECESSARY BY THE DEPARTMENT

PROJECT	SHEET NO.
U000-138-R04	2A

PROJECT MANAGER Perry Eisenach, P.E. - City of Winchester (540) 667-2085
SURVEYED BY, DATE Sidney Thomas, L.S. - Rinker Design Associates (703) 368-7373, October 2014
DESIGN BY John A. Giometti, P.E. - Rinker Design Associates (703) 334-0060
SUBSURFACE UTILITY BY, DATE Matthew Bansiem - Mid Atlantic Utility Locating (703) 378-0100, August 2014

Office Locations
Rinker Design Associates, P.C.
Civil Engineering - Surveying - Land Planning
Transportation - Environmental
Right of Way Services
SINCE INCORPORATED 1988
4411 Plaza Green Drive
Suite 100
Lexington, KY 40509
Phone: (859) 263-2011
Fax: (859) 263-2018
4411 Parkway Boulevard
Suite 100
Lexington, KY 40511
Phone: (859) 269-8080
Fax: (859) 269-8088
4411 Dominion Boulevard
Suite 100
Glen Allen, VA 23060
Phone: (804) 747-0900
Fax: (804) 747-0901

TYPICAL SECTIONS

ROUTE 11
GS-5 (40 MPH)
STA.13+85 - STA.28+00

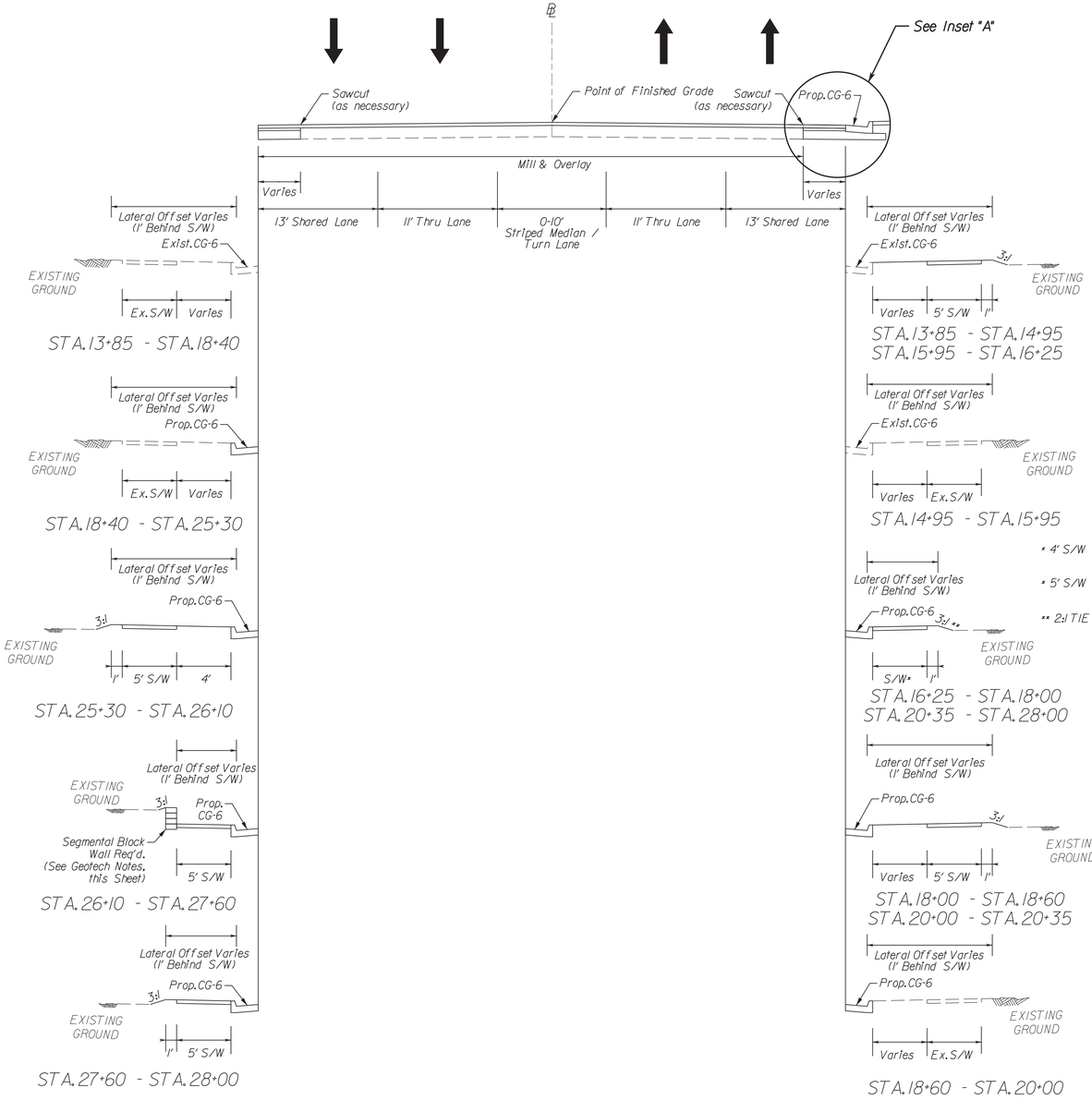

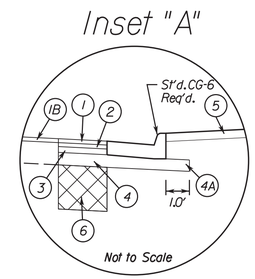

REVISED	STATE	STATE ROUTE	STATE PROJECT	SHEET NO.
	VA.	11	U000-138-R04 R201,C501	2A(1)

COMMONWEALTH OF VIRGINIA
JOHN A. GIOMETTI
Lic. No. 032300
PROFESSIONAL ENGINEER

John A Giometti
2020.02.14 16:56:41-05'00'

Rinker Design Assoc., P.C.
Fredericksburg, Virginia
ROADWAY ENGINEER

DESIGN FEATURES RELATING TO CONSTRUCTION OR TO REGULATION AND CONTROL OF TRAFFIC MAY BE SUBJECT TO CHANGE AS DEEMED NECESSARY BY THE DEPARTMENT

INSET DESIGN LEGEND

1. Surface Course - Asph.Conc., Type SM-9.5D @ 165 lbs/sq.yd.
1B. Milled Surface Course - Milled to depth of (1.5") and replaced W/ Asph.Conc., Type SM-9.5D Overlay to Final Grade @ 165 lbs/sq.yd.
2. Intermediate Course - Asph.Conc., Type IM-19.0D @ 275 lbs/sq.yd.
3. Base Course - (3.0") Asph.Conc., Type BM-25.0A
4. Sub-Base Course - (6.0") Aggr.Base Material, Type I, Size No.21-B
4A. Sub-Base Course - (Variable Depth) Aggr.Base Material, Type I, Size No.21-B
5. (4.0") Hydraulic Concrete Cement
6. Undercut 2 feet of the existing subgrade soils in the proposed pavement widening areas and replace with compacted suitable fills with a minimum CBR value of 10.

Geotech Retaining Wall Notes:

It is anticipated that natural FAT CLAY (CH) and fill materials consisting of Silty SAND with gravel and poorly graded SAND (SP) will be encountered at anticipated bearing elevations along the retaining wall alignments. If FAT CLAY (CH) is encountered at bearing elevation, the subgrade will require undercutting to a depth of 4 feet below finished grade as described in the Highly Plastic Soils section presented later in the Geotech report.

In addition, it is recommended that any isolated loose or soft areas encountered during foundation construction be removed to a minimum depth of 2 feet below bearing elevation and recompacted in place in accordance with the Compacted Fills section presented later in the Geotech report. The foundation excavations should be observed by a qualified geotechnical engineer to determine if additional undercutting is required.

The segmental retaining walls should be designed to withstand lateral earth pressures and surcharge loads. We recommend that the following parameters be used for retaining wall design:

-Allowable Bearing Pressure 2,000 psf
-Friction Angle for Soil Backfill 28°
-Unit Weight of Soil Backfill 120 pcf
-Equivalent Active Fluid Pressure 45 pcf
-Equivalent Passive Fluid Pressure 330 pcf

We recommend that passive earth pressures be neglected within 12 inches of proposed final grades at the toe of the retaining wall.

The above recommended soil parameters assume that the wall backfill will consist of properly compacted granular materials. The onsite FAT CLAY (CH) or LEAN CLAY (CL) should not be used for backfill against the retaining walls. The recommended equivalent fluid pressures assume that constantly functioning drainage systems are installed between the walls and the soil backfill to prevent any accidental buildup of hydrostatic pressures. The wall design should also account for any surcharge loads within a 45-degree slope from the base of the wall.

The bottom of the retaining walls should be placed at a minimum depth of 30 inches below finished grade to provide adequate frost cover protection acceptable for this region. All wall backfills should be placed in accordance with the Compacted Fills section of the Geotech report. Heavy earthwork equipment should maintain a minimum horizontal distance away from the walls of one foot per foot of vertical wall height. Lighter compaction equipment should be used close to the walls.

During construction, the bearing capacity at the final footing excavation should be documented in the field by an authorized representative of the Geotechnical Engineer of Record to check that the in situ bearing capacity at the bottom of each footing excavation is adequate for the design loads.

PROJECT MANAGER Perry Eisenach, P.E. - City of Winchester (540) 667-2085
SURVEYED BY, DATE Sidney Thomas, L.S. - Rinker Design Associates (703) 368-7373, October 2014
DESIGN BY John A. Giometti, P.E. - Rinker Design Associates (703) 334-0060
SUBSURFACE UTILITY BY, DATE Matthew Bansiem - Mid Atlantic Utility Locating (703) 378-0100, August 2014

Office Locations
Rinker Design Associates, P.C.
Civil Engineering - Surveying - Land Planning
Transportation - Environmental
Right of Way Services
SERVING VIRGINIA SINCE 1980
4651 Daniels Drive, Suite 100, Chantilly, VA 20151 Phone: (703) 378-0100 Fax: (703) 378-0101
4651 Daniels Drive, Suite 100, Chantilly, VA 20151 Phone: (703) 334-0060 Fax: (703) 334-0061
4651 Daniels Drive, Suite 100, Chantilly, VA 20151 Phone: (703) 334-0060 Fax: (703) 334-0061
4651 Daniels Drive, Suite 100, Chantilly, VA 20151 Phone: (703) 334-0060 Fax: (703) 334-0061

TYPICAL SECTIONS

ROUTE 11
GS-5 (40 MPH)
STA. 28+00 - STA. 44+50
STA. 50+00 - STA. 59+80

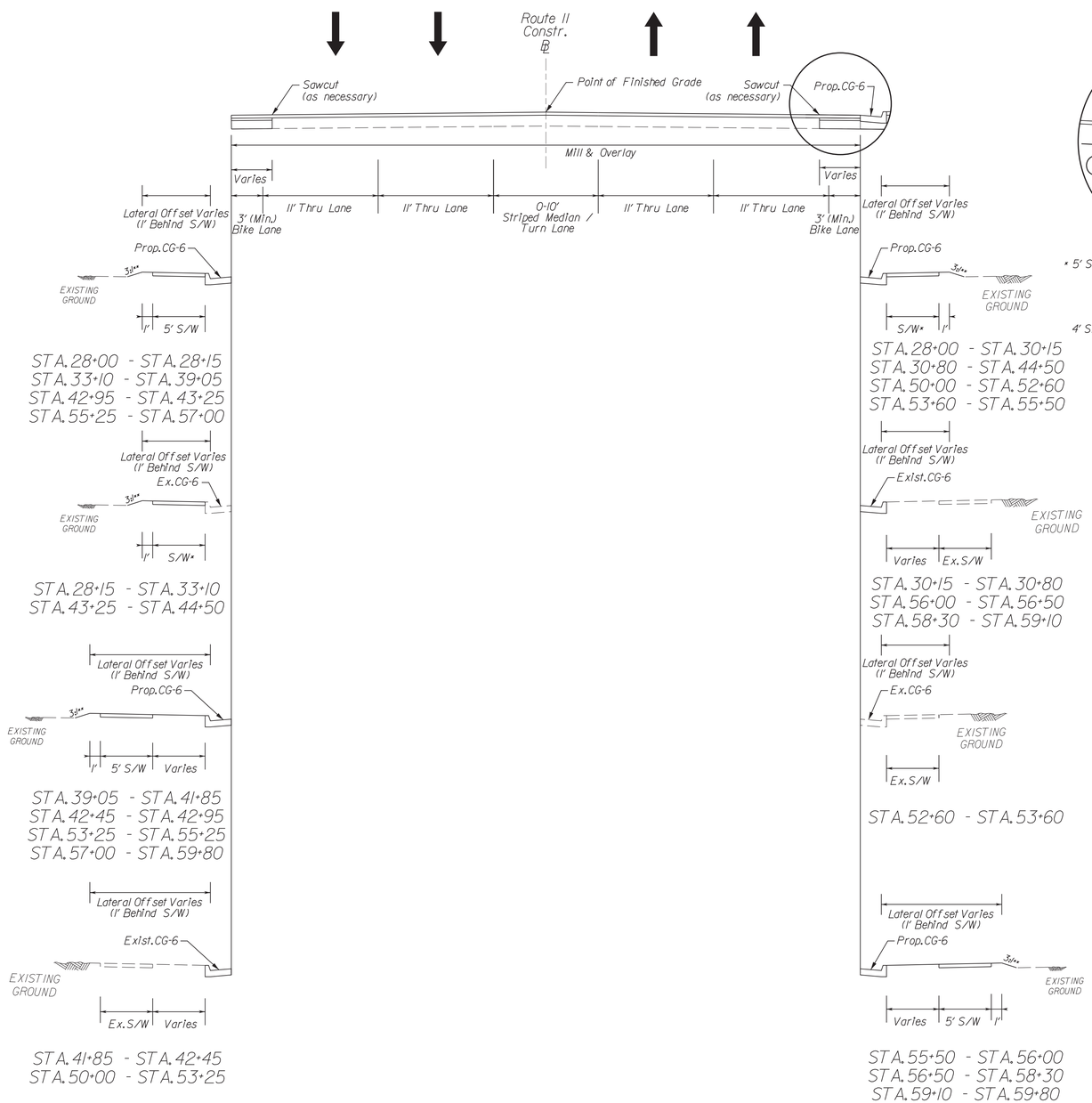

* 5' S/W = STA. 28+15 - STA. 29+85
STA. 31+20 - STA. 33+10
STA. 43+25 - STA. 44+50

* 4' S/W = STA. 29+85 - STA. 31+20

** 2:1 TIE SLOPE = STA. 28+75 - STA. 29+10
STA. 29+55 TO STA. 29+30
STA. 29+55 TO STA. 33+50
STA. 54+20 TO STA. 55+10

* 5' S/W = 28+15 - 30+15
30+80 - 40+00
43+25 - 44+50
50+00 - 52+60
53+60 - 55+50

4' S/W = 40+00 - 43+25

** 2:1 TIE SLOPE = STA. 36+20 - STA. 38+90
STA. 40+50 TO STA. 43+00
STA. 57+10 TO STA. 58+22

Inset "A"

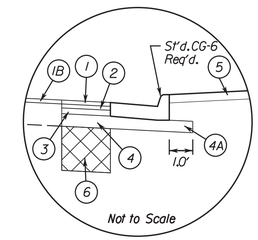

COMMONWEALTH OF VIRGINIA
JOHN A. GIOMETTI
Lic. No. 032300
PROFESSIONAL ENGINEER
John A Giometti
2020.02.14 16:56:22-05'00'
Rinker Design Assoc., P.C.
Fredericksburg, Virginia
ROADWAY ENGINEER

REVISED	STATE	STATE ROUTE	STATE PROJECT	SHEET NO.
	VA.	11	U000-138-R04 R201, C501	2A(2)

DESIGN FEATURES RELATING TO CONSTRUCTION OR TO REGULATION AND CONTROL OF TRAFFIC MAY BE SUBJECT TO CHANGE AS DEEMED NECESSARY BY THE DEPARTMENT

INSET DESIGN LEGEND

1. Surface Course - Asph.Conc., Type SM-9.5D @ 165 lbs/sq.yd.
1B. Milled Surface Course - Milled to depth of (1.5") and replaced W/ Asph.Conc., Type SM-9.5D Overlay to Final Grade @ 165 lbs/sq.yd.
2. Intermediate Course - Asph.Conc., Type IM-19.5A @ 275 lbs/sq.yd.
3. Base Course - (3.0") Asph.Conc., Type BM-25.0A
4. Sub-Base Course - (6.0") Aggr.Base Material, Type I, Size No.21-B
4A. Sub-Base Course - (Variable Depth) Aggr.Base Material, Type I, Size No.21-B
5. (4.0") Hydraulic Concrete Cement
6. Undercut 2 feet of the existing subgrade soils in the proposed pavement widening areas and replace with compacted suitable fills with a minimum CBR value of 10.

PROJECT MANAGER Perry Eisenach, P.E. - City of Winchester (540) 667-2085
SURVEYED BY, DATE Sidney Thomas, L.S. - Rinker Design Associates (703) 368-7373, October 2014
DESIGN BY John A. Giometti, P.E. - Rinker Design Associates (703) 334-0060
SUBSURFACE UTILITY BY, DATE Matthew Bansiem - Mid Atlantic Utility Locating (703) 378-0100, August 2014

Office Locations
Corporate Headquarters: 4670 Corporation Drive, Suite 100, Fairfax, VA 22030, Phone: (703) 334-0060, Fax: (703) 352-0243
4670 Corporation Drive, Suite 100, Fairfax, VA 22030, Phone: (703) 334-0060, Fax: (703) 352-0243
4670 Corporation Drive, Suite 100, Fairfax, VA 22030, Phone: (703) 334-0060, Fax: (703) 352-0243
4670 Corporation Drive, Suite 100, Fairfax, VA 22030, Phone: (703) 334-0060, Fax: (703) 352-0243
Design Associates, P.C.
Civil Engineering • Surveying • Land Planning
Transportation • Environmental
Right-of-Way Services
Rinker
SHOOT TO SOLVE

TYPICAL SECTIONS

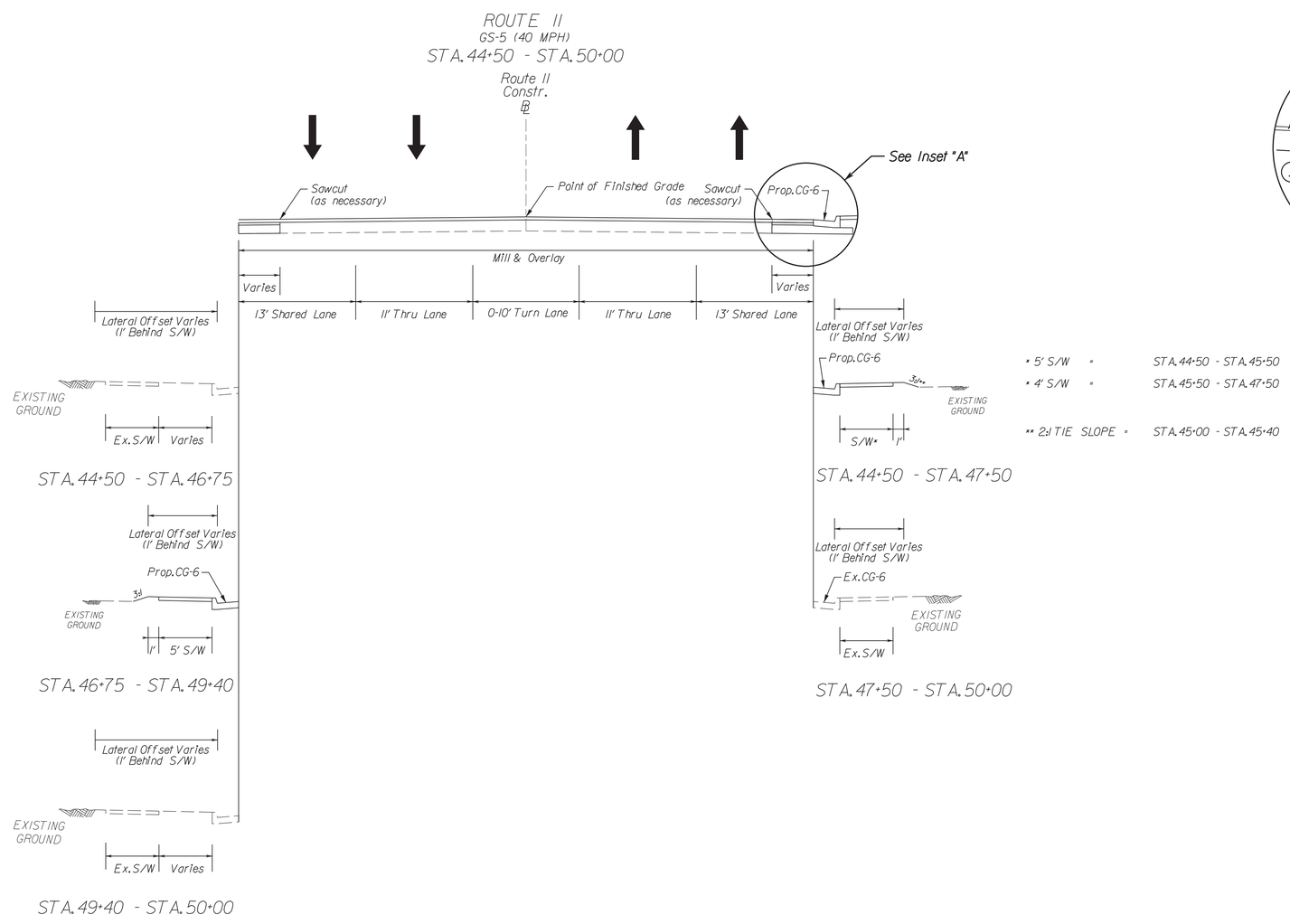

* 5' S/W = STA. 44+50 - STA. 45+50
* 4' S/W = STA. 45+50 - STA. 47+50
** 2:1 TIE SLOPE = STA. 45+00 - STA. 45+40

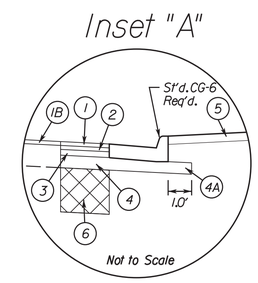

INSET DESIGN LEGEND

1. Surface Course - Asph. Conc., Type SM-9.5D @ 165 lbs/sq.yd.
1B. Milled Surface Course - Milled to depth of (1.5") and replaced W/ Asph. Conc., Type SM-9.5D Overlay to Final Grade @ 165 lbs/sq.yd.
2. Intermediate Course - Asph. Conc., Type IM-19.0D @ 275 lbs/sq.yd.
3. Base Course - (3.0") Asph. Conc., Type BM-25.0A
4. Sub-Base Course - (6.0") Aggr. Base Material, Type 1, Size No. 21-B
4A. Sub-Base Course - (Variable Depth) Aggr. Base Material, Type 1, Size No. 21-B
5. (4.0") Hydraulic Concrete Cement
6. Undercut 2 feet of the existing subgrade soils in the proposed pavement widening areas and replace with compacted suitable fills with a minimum CBR value of 10.

COMMONWEALTH OF VIRGINIA
JOHN A. GIOMETTI
Lic. No. 032300
PROFESSIONAL ENGINEER

John A Giometti
2020.02.14 16:56:03-05'00'

Rinker Design Assoc., P.C.
Fredericksburg, Virginia
ROADWAY ENGINEER

REVISED	STATE	STATE ROUTE	STATE PROJECT	SHEET NO.
	VA.	11	U000-138-R04 R201, C501	2A(3)

DESIGN FEATURES RELATING TO CONSTRUCTION OR TO REGULATION AND CONTROL OF TRAFFIC MAY BE SUBJECT TO CHANGE AS DEEMED NECESSARY BY THE DEPARTMENT

PROJECT MANAGER Perry Eisenach, P.E. - City of Winchester (540) 667-2085
SURVEYED BY, DATE Sidney Thomas, L.S. - Rinker Design Associates (703) 368-7373, October 2014
DESIGN BY John A. Giometti, P.E. - Rinker Design Associates (703) 334-0060
SUBSURFACE UTILITY BY, DATE Matthew Bansiem - Mid Atlantic Utility Locating (703) 378-0100, August 2014

Office Locations
Rinker Design Associates, P.C.
Civil Engineering - Surveying - Land Planning
Transportation - Environmental
Right of Way Services
SINCE ESTABLISHED IN M.D.C.C.
Main Office: 107 Alex Lewis Drive, Suite 100, Stafford, VA 22556 Phone: (540) 659-0440 Fax: (540) 659-0441
Fairfax Office: 4069 Chain Bridge Road, Suite 100, Fairfax, VA 22030 Phone: (703) 334-0060 Fax: (703) 352-0265
Fredericksburg Office: 107 Alex Lewis Drive, Suite 100, Fredericksburg, VA 22407 Phone: (540) 659-0440 Fax: (540) 659-0441

TYPICAL SECTIONS

ROUTE 11
GS-5 (40 MPH)

STA.59+80 - STA.70+50
Route 11
Constr.
℄

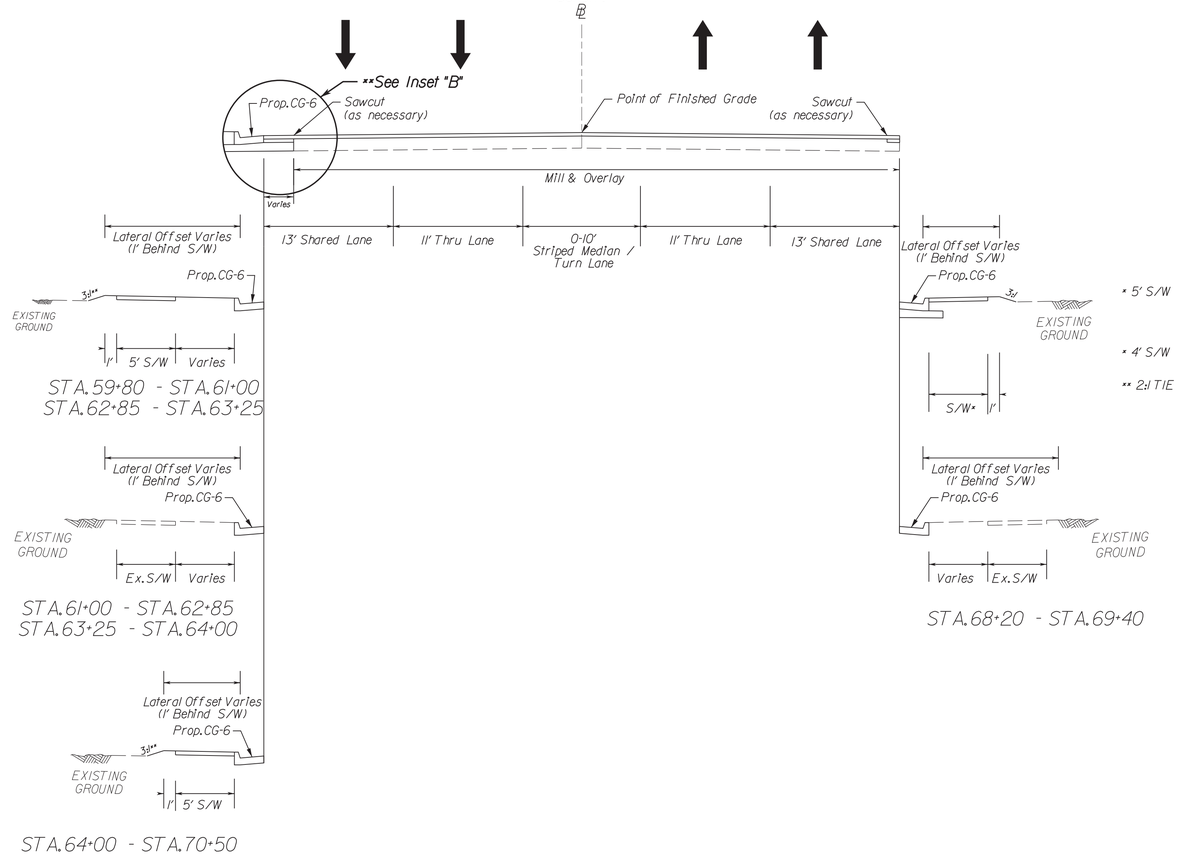

* 5' S/W = STA.59+80 - STA.66+75
STA.30+80 - STA.40+00
STA.68+00 - STA.68+20
STA.69+40 - STA.70+50

* 4' S/W = STA.66+75 - STA.68+00

** 2:1 TIE SLOPE = STA.66+90 - STA.68+35

Inset "A"

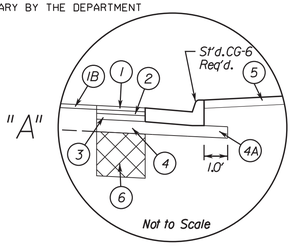

Inset "B"

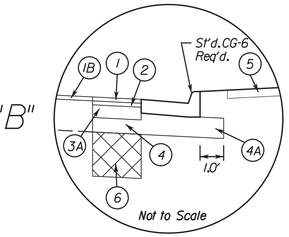

Inset "C"

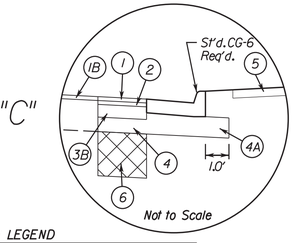

INSET DESIGN LEGEND

1. Surface Course - Asph.Conc., Type SM-9.5D @ 165 lbs/sq.yd.
1B. Milled Surface Course - Milled to depth of (1.5") and replaced W/ Asph.Conc., Type SM-9.5D Overlay to Final Grade @ 165 lbs/sq.yd.
2. Intermediate Course - Asph.Conc., Type IM-19.0D @ 275 lbs/sq.yd.
3. Base Course - (3.0") Asph.Conc., Type BM-25.0A (Sta.13+80 to Sta.60+50)
3A. Base Course ** - (5.0") Asph.Conc., Type BM-25.0A (Sta.60+50 to Sta.73+00)
3B. Base Course ** - (8.0") Asph.Conc., Type BM-25.0A (Sta.73+00 to Sta.81+67)
4. Sub-Base Course - (6.0") Aggr.Base Material, Type I, Size No.21-B
4A. Sub-Base Course - (Variable Depth) Aggr.Base Material, Type I, Size No.21-B
5. (4.0") Hydraulic Concrete Cement
6. Undercut 2 feet of the existing subgrade soils in the proposed pavement widening areas and replace with compacted suitable fills with a minimum CBR value of 10.

** Inset A should be used from station 13+80 to 60+50, Inset B should be used from station 60+50 to 73+00, and Inset C should be used from station 73+00 to 81+67.

COMMONWEALTH OF VIRGINIA
JOHN A. GIOMETTI
Lic. No. 032300
PROFESSIONAL ENGINEER

John A Giometti
2020.02.14 16:55:42-05'00'

Rinker Design Assoc., P.C.
Fredericksburg, Virginia
ROADWAY ENGINEER

REVISED	STATE	STATE ROUTE	STATE PROJECT	SHEET NO.
	VA.	11	U000-138-R04 R201,C501	2A(4)

DESIGN FEATURES RELATING TO CONSTRUCTION OR TO REGULATION AND CONTROL OF TRAFFIC MAY BE SUBJECT TO CHANGE AS DEEMED NECESSARY BY THE DEPARTMENT

PROJECT MANAGER Perry Eisenach, P.E. - City of Winchester (540) 667-2085
SURVEYED BY, DATE Sidney Thomas, L.S. - Rinker Design Associates (703) 368-7373, October 2014
DESIGN BY John A. Giometti, P.E. - Rinker Design Associates (703) 334-0060
SUBSURFACE UTILITY BY, DATE Matthew Bansiem - Mid Atlantic Utility Locating (703) 378-0100, August 2014

Office Locations
Rinker Design Associates, P.C.
Civil Engineering - Surveying - Land Planning
Transportation - Environmental
Right of Way Services
SINCE ESTABLISHED IN MCMLXXVIII
4651 Daniels Drive
Suite 100
Chantilly, VA 20151
Phone: (703) 378-0100
Fax: (703) 378-0101
4651 Daniels Drive
Suite 100
Chantilly, VA 20151
Phone: (703) 334-0060
Fax: (703) 334-0061
4651 Daniels Drive
Suite 100
Chantilly, VA 20151
Phone: (703) 334-0060
Fax: (703) 334-0061

TYPICAL SECTIONS

COMMONWEALTH OF VIRGINIA
JOHN A. GIOMETTI
Lic. No. 032300
PROFESSIONAL ENGINEER

John A Giometti
2020.02.14 16:54:42-05'00'

Rinker Design Assoc., P.C.
Fredericksburg, Virginia
ROADWAY ENGINEER

REVISED	STATE	STATE ROUTE	STATE PROJECT	SHEET NO.
	VA.	11	U000-138-R04 R201,C501	2A(5)

DESIGN FEATURES RELATING TO CONSTRUCTION OR TO REGULATION AND CONTROL OF TRAFFIC MAY BE SUBJECT TO CHANGE AS DEEMED NECESSARY BY THE DEPARTMENT

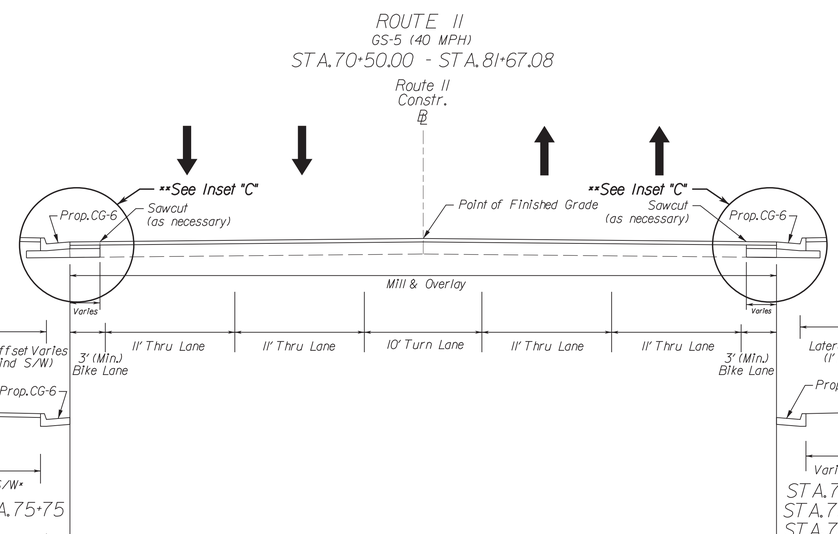

* 5' S/W = STA.70+50 - STA.72+90
STA.75+50 - STA.75+75

* 4' S/W = STA.72+90 - STA.75+50

** 2:1 TIE SLOPE = STA.71+90 - STA.72+15
STA.73+80 - STA.74+10
STA.74+75 - STA.75+30

STA.70+50 - STA.75+75

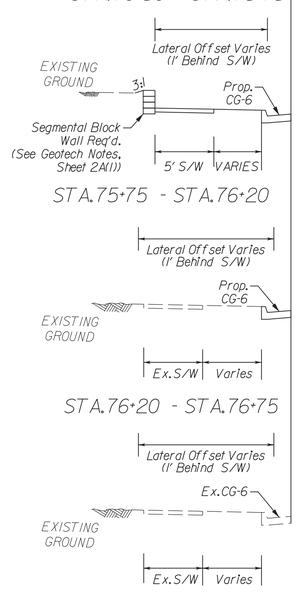

STA.75+75 - STA.76+20

STA.76+20 - STA.76+75

STA.76+75 - STA.81+67

* 5' S/W = STA.70+50 - STA.71+15
STA.78+00 - STA.78+30

* 4' S/W = STA.75+50 - STA.76+00
STA.76+50 - STA.77+00

STA.70+50 - STA.71+70
STA.75+50 - STA.76+00
STA.76+50 - STA.77+00
STA.78+00 - STA.78+30

* 5' S/W = STA.71+70 - STA.72+50
STA.77+00 - STA.78+00

* 4' S/W = STA.72+50 - STA.75+50
STA.76+00 - STA.76+50

** 2:1 TIE SLOPE = STA.71+70 - STA.72+10
STA.73+05 - STA.74+50

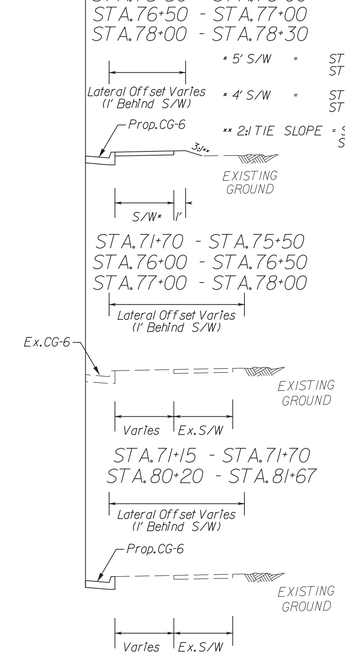

STA.71+70 - STA.75+50
STA.76+00 - STA.76+50
STA.77+00 - STA.78+00

STA.71+15 - STA.71+70
STA.80+20 - STA.81+67

STA.78+30 - STA.80+20

Inset "B"

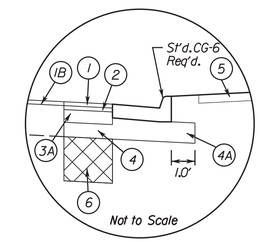

Inset "C"

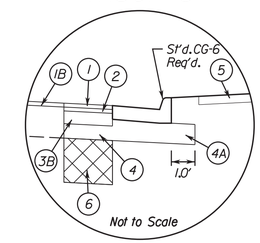

INSET DESIGN LEGEND

1. Surface Course - Asph.Conc., Type SM-9.5D @ 165 lbs/sq.yd.
1B. Milled Surface Course - Milled to depth of (1.5") and replaced W/ Asph.Conc., Type SM-9.5D Overlay to Final Grade @ 165 lbs/sq.yd.
2. Intermediate Course - Asph.Conc., Type IM-19.0D @ 275 lbs/sq.yd.
3A. Base Course ** - (5.0") Asph.Conc., Type BM-25.0A (Sta.60+50 to Sta.73+00)
3B. Base Course ** - (8.0") Asph.Conc., Type BM-25.0A (Sta.73+00 to Sta.81+67)
4. Sub-Base Course - (6.0") Aggr.Base Material, Type I, Size No.21-B
4A. Sub-Base Course - (Variable Depth) Aggr.Base Material, Type I, Size No.21-B
5. (4.0") Hydraulic Concrete Cement
6. Undercut 2 feet of the existing subgrade soils in the proposed pavement widening areas and replace with compacted suitable fills with a minimum CBR value of 10.

** Inset A should be used from station 13+80 to 60+50, Inset B should be used from station 60+50 to 73+00, and Inset C should be used from station 73+00 to 81+67.

PROJECT MANAGER Perry Eisenach, P.E. - City of Winchester (540) 667-2085
SURVEYED BY, DATE Sidney Thomas, L.S. - Rinker Design Associates (703) 368-7373, October 2014
DESIGN BY John A. Giometti, P.E. - Rinker Design Associates (703) 334-0060
SUBSURFACE UTILITY BY, DATE Matthew Bansiem - Mid Atlantic Utility Locating (703) 378-0100, August 2014

Office Locations
Rinker Design Associates, P.C.
Civil Engineering - Surveying - Environmental
Transportation - Right of Way Services
RDA Rinker
SHOT TO SATISFACTION

TYPICAL SECTIONS

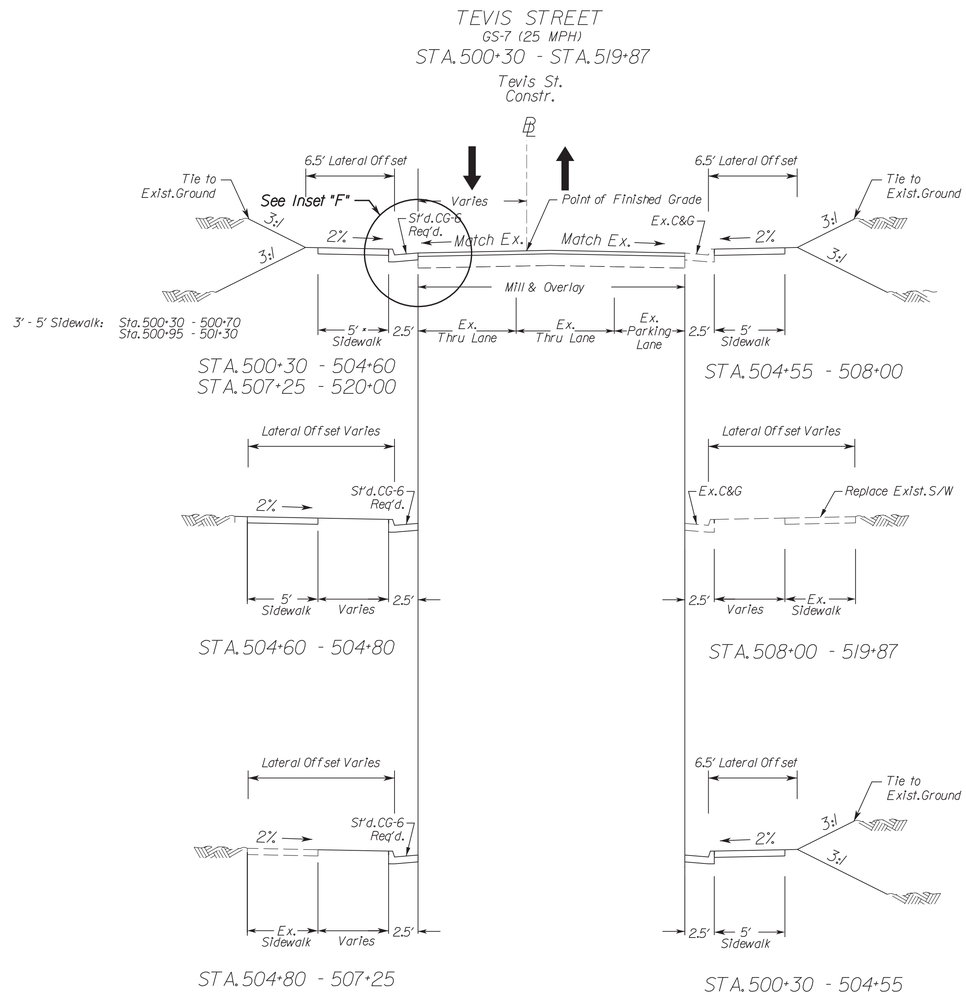

Inset "F"

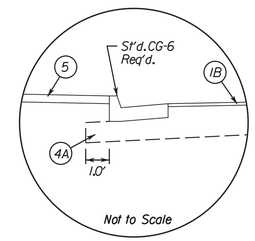

INSET DESIGN LEGEND

- (1B) Milled Surface Course - Milled to depth of (1.5" min.) and replaced W/ (Depth Varies - per 1 inch - 110 lb/sq.yd) Asph. Conc., Type SM-9.5D to final grade
- (4A) Sub-Base Course - (Variable Depth) Aggr. Base Material, Type I, Size No. 21-B (IF NECESSARY)
- (5) (4.0") Hydraulic Concrete Cement

Inset "H" (Tevis Street Full-Depth)

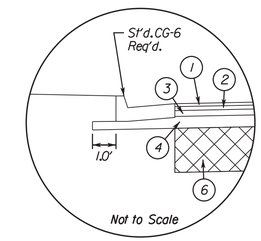

INSET DESIGN LEGEND

- (1) Surface Course - Asph. Conc., Type SM-9.5D @ 165 lbs/sq.yd.
- (2) Intermediate Course - Asph. Conc., Type IM-19.5A @ 275 lbs/sq.yd.
- (3) Base Course - (3.0") Asph. Conc., Type BM-25.0A
- (4) Sub-Base Course - (6.0") Aggr. Base Material, Type I, Size No. 21-B
- (6) Undercut 2 feet of the existing subgrade soils in the proposed pavement widening areas and replace with compacted suitable fills with a minimum CBR value of 10.

PRIVATE AND COMMERCIAL ENTRANCES

NOT TO SCALE

TYPE III
Asphalt - Residential

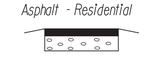

Asphalt Conc. Type
1.5" SM-9.5D @ 165 Lbs. per S.Y.
4.5" Aggr. Base Mat'l. Ty. I
No. 21B

TYPE IV
Asphalt - Commercial

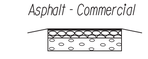

Asphalt Conc. Type
1.5" SM-9.5D @ 165 Lbs. per S.Y.
3.5" Asphalt Conc. Base Course
BM-25.0A @ 385 Lbs. per S.Y.
7" Aggr. Base Mat'l. Ty. I
No. 21B

COMMONWEALTH OF VIRGINIA
JOHN A. GIOMETTI
Lic. No. 032300
PROFESSIONAL ENGINEER

John A Giometti
2020.02.14 17:07:40-05'00'

Rinker Design Assoc., P.C.
Fredericksburg, Virginia
ROADWAY ENGINEER

REVISED	STATE	STATE ROUTE	STATE PROJECT	SHEET NO.
	VA.	11	U000-138-R04 R201, C501	2A(6)

DESIGN FEATURES RELATING TO CONSTRUCTION OR TO REGULATION AND CONTROL OF TRAFFIC MAY BE SUBJECT TO CHANGE AS DEEMED NECESSARY BY THE DEPARTMENT

2/14/2020
9:05:21 AM

d103013002d(1).dgn
Plotted By: mbeales

Rinker Design Associates, P.C.
Civil Engineering - Surveying - Land Planning
Transportation - Environmental
Right of Way Services
www.RDAcivil.com

Office Locations
9385 Discovery Boulevard, Suite 200, Manassas, VA 20109, Phone: (703) 368-7373, Fax: (703) 257-5443
4301 Dominion Boulevard, Suite 100, Glen Allen, VA 23060, Phone: (804) 612-0665, Fax: (804) 612-0668
927 Maple Grove Drive, Suite 105, Fredericksburg, VA 22407, Phone: (540) 548-4470, Fax: (540) 548-4471

PROJECT MANAGER Perry Eisenach, P.E. - City of Winchester (540) 667-2085
SURVEYED BY, DATE Sidney Thomas, L.S. - Rinker Design Associates (703) 368-7373, October 2014
DESIGN BY John A. Giometti, P.E. - Rinker Design Associates (703) 334-0060
SUBSURFACE UTILITY BY, DATE Matthew Ranslem - Mid Atlantic Utility Locating (703) 378-0100, August 2014

STORMWATER POLLUTION PREVENTION PLAN (SWPPP) GENERAL INFORMATION SHEET

See Sheet 2 of 3 for Acronyms

REVISED	STATE	STATE ROUTE	STATE PROJECT	SHEET NO.
	VA.	11	U000-138-R04 C501	2D(1)

DESIGN FEATURES RELATING TO CONSTRUCTION OR TO REGULATION AND CONTROL OF TRAFFIC MAY BE SUBJECT TO CHANGE AS DEEMED NECESSARY BY THE DEPARTMENT

The information contained in the SWPPP General Information sheets is intended to comply with the requirements of the VPDES General Permit For Discharges Of Stormwater From Construction Activities (the VPDES Construction Permit) issued July 1, 2014 and VDOT's approved Annual ESC and SWM Standards and Specifications.

The SWPPP General Information sheets are to be completed and included in the construction plan set (or other such documents) for land disturbance (construction) activities that disturb an area equal to or greater than 10,000 square feet, or equal to or greater than 2,500 square feet in the area defined as Tidewater, Virginia in the Virginia Chesapeake Bay Preservation Act.

The City of Winchester RLD will ensure that the information shown on the SWPPP General Information sheets is updated/revised as necessary in order to reflect changes that may occur during the construction phase of the land disturbing (construction) activity. The updated/revised sheets shall be maintained with the designated record set of plans (or other such documents)for the land disturbance (construction) activity.

SECTION I GENERAL INFORMATION

1. Activity Description - This project is a drainage improvement project, including the widening of approximately 1.33 miles of Valley Avenue (U.S. Route 11) from 0.08 mi. North of Shawnee Dr. intersection to Middle Road intersection.

2. This land disturbance (construction) activity site is located in the City of Winchester, VA. The project is within the limits of the Conococheague-Opequon watershed, and falls within HUC12 #020700040901, Opequon Creek-Sulphur Spring Run and Redbud Run-Opequon Creek. These HUC12 areas are located within VAHU6-PU16 which flows through Opequon Creek to the Potomac River. Total disturbed area for this project is 3.78 acres.

3. This proposed activity disturbs one acre or greater and requires coverage under the VPDES General Permit For Discharges Of Stormwater From Construction Activities (the VPDES Construction Permit) as issued by the DEQ. A copy of the VPDES Construction Permit (VAR10), the registration information (LD-445 form) and the permit coverage letter received from DEQ shall be maintained with other SWPPP documents for this land disturbing (construction) activity.

** 4. The location of on-site support facilities that will be covered under the VPDES Construction Permit coverage for this land disturbance (construction) activity shall be provided by the contractor and identified on the record set of plans or in other appropriate contract documents. Support facilities shall include, but not be limited to, borrow and disposal areas, construction and waste material storage areas, equipment and vehicle washing, maintenance, storage and fueling areas, storage areas for fertilizers, fuels or chemicals, concrete wash out areas, sanitary waste facilities and any other areas that may generate a stormwater or non-stormwater discharge directly related to the construction site.

** 5. Evidence of permit coverage shall be provided by the contractor for all support activities located outside of VDOT right of way or easement in the form of the Construction General Permit coverage letter: (List permit number when applicable)

N/A 6. List the surface waters that have been identified as impaired in the DEQ 2012 305(b)/303(d) Water Quality Assessment Integrated Report for sediment, total suspended solids, turbidity, nitrogen or phosphorus. These pollutants are considered benthic impairments:

N/A 7. Identify the TMDLs where stormwater from construction activities discharges into a watershed with a TMDL waste load allocation established and approved by the State Water Control Board prior to July 1, 2014 for sediment, total suspended solids, turbidity, nitrogen or phosphorus:

8. This land disturbance (construction) activity discharges stormwater to the following surface waters that have been identified as exceptional in Section 9VAC25-260-30 A 3 c of the Virginia Administrative Code:
N/A

9.Locations of surface waters and locations where concentrated stormwater is discharged from this land disturbance (construction) activity are identified in the construction plan set (or other such documents) for this land disturbance (construction) activity.

10. The ESC and SWM plans (where applicable) for this land disturbance (construction) activity have been developed in accordance with VDOT's Annual Erosion and Sediment Control and Stormwater Management Standards and Specifications as approved by the DEQ.

11. (a) List the RLD for the land disturbance activity: (required for erosion and sediment control)
(b) The following individual(s) has delegated authority to sign all reports required by the construction permit including the SWPPP (LD445E) and inspection reports. The individual(s) has overall responsibility for environmental matters for the project: (required only for permitted projects)

Name	Position

* 12. The name of the individual(s) responsible for the inspection of the erosion and sediment control and pollution prevention measures on this land disturbance (construction) activity is identified on the LD-445E form which will be maintained with the other SWPPP documents for this land disturbance (construction) activity (Note: Individual(s) shall be certified through the DEQ ESC Inspector Certification Program and shall be knowledgeable in the area of pollution prevention at construction sites and shall be a City of Winchester employee or an agent working for the City of Winchester.)

* 13. The ESC and P2 inspections for this land disturbing (construction) activity shall follow either Schedule 1 or 2 as defined in Section 107.16(e) of the VDOT Road & Bridge Specifications Special Provision S107J31. Rain gage notes apply only to Inspection Schedule 1.

** 14. The location of the on-site rain gage that will be used to determine the occurrence of a measurable storm event for the purposes of ESC and Pollution Prevention inspections will be provided by the contractor and identified on the record set of plans or in other appropriate SWPPP documents for this land disturbance (construction) activity:
(List location of rain gage)

The rain gage shall be observed daily at 10:00 AM to determine the occurrence of a measurable storm event (i.e., 0.25 inches of rainfall or greater in a 24 hour period). A log book shall be maintained to record observation information which shall include (1) the date, (2) the time, (3) whether or not rainfall is occurring at the time of the observation, (4) the amount of accumulated rainfall in the gage, if any, and (5) whether or not an inspection is required based on the amount of accumulated rainfall in the gage.
If there is no rainfall occurring at the time of the observation, the observation information shall be noted in the log book and the rain gage emptied and replaced. An inspection is required if there is 0.25 inches or more accumulation noted in the rain gage.

If there is rainfall occurring at the time of the observation, the observation information is to be noted in the log book. The rain gage is not to be emptied but left to accumulate additional rainfall until the conclusion of the rainfall event. At the conclusion of the rainfall event, an observation of the rain gage shall be made and the observation information shall be noted in the log book and the rain gage emptied and replaced. An inspection is required if there is 0.25 inches or more accumulation noted in the rain gage.

15. The following VDOT documents serve the purpose of a) permitted projects b) non-permitted projects in Chesapeake Bay Preservation Areas (CBPA) with 2,500 S.F. to 1.0 acre of land disturbance c) non-permitted projects requiring a SWPPP and d) Non-permitted, Non-CBPA with BMP projects that have a water quantity BMP:

VDOT LD-445: Permitted projects, CBPA projects and Non-permitted, Non-CBPA with BMP projects that have a water quantity BMP.
VDOT LD-445A: Permitted projects only.
VDOT LD-445B: Permitted projects only.
VDOT LD-445C: Projects that require a permit or SWPPP.
VDOT LD-445D: Permitted projects, CBPA projects and Non-permitted, Non-CBPA with BMP projects that have a water quantity BMP.
VDOT LD-445E: Permitted projects only.
VDOT LD-445F: Emergency work projects (when applicable).
VDOT LD-445G: Permitted and CBPA projects requesting a Water Quality. Requirement Exception (when applicable).
VDOT LD-445H: Permitted projects only.
VDOT C-107 Part I and Part II: All projects that require a permit or SWPPP.

SECTION II EROSION AND SEDIMENT CONTROL

1. The following variances to the Virginia ESC Regulations have been approved by the DEQ for this land disturbance (construction) activity: N/A

** 2. The intended sequence and timing of activities that disturb soils at the site (e.g., grubbing, excavation, grading, utilities and infrastructure installation, etc.) shall be provided by the contractor in accordance with Section 108.03 of the VDOT R&B Specifications and shall be included with the other SWPPP documents for this land disturbance (construction) activity.

3. Directions of stormwater flow and approximate slopes anticipated after major grading activities are identified in the construction plan set (or other such documents) for this land disturbance (construction) activity.

4. Areas of soil disturbance and areas of the site which will not be disturbed are identified in the construction plan set (or other such documents) for this land disturbance (construction) activity.

5. Locations of major structural and nonstructural ESC measures intended to filter, settle or similarly remove sediment are identified in the construction plan set (or other such documents) for this land disturbance (construction) activity.

6. Locations where stabilization practices are expected to occur are identified in the construction plan set (or other such documents) for this land disturbance (construction) activity.

* Denotes information that is to be provided/completed by the City of Winchester RLD.
** Denotes information that is to be provided/completed by the contractor.

7. A description of interim and permanent stabilization practices for the site are identified in the applicable sections of the documents identified in the Note 1 of Section III.

** 8. A record of the dates when major grading activities occur, when construction activities temporarily or permanently cease on a portion of the site, and when stabilization measures are initiated will be provided by the contractor and maintained with the record set of plans or other SWPPP documents for this land disturbance (construction) activity:
(List how this will be tracked and the location)

9.A description and schedule of procedures to maintain vegetation, erosion and sediment control measures and other protective measures in good and effective operating conditions are identified in Sections 107.16 and 303.03 of the VDOT R&B Specifications.

10. Nutrients shall be applied in accordance with Sections 603 and 604 of the VDOT Road and Bridge Specifications. Nutrients shall not be applied during rainfall events.

11. All engineering calculations supporting the design of erosion and sediment control measures proposed for this land disturbance (construction) activity are contained in the project drainage file located in the City of Winchester Hydraulics Section and will be made available for review upon request during normal business hours.

12. The temporary erosion and siltation control items shown on the ESC Plan for this land disturbing (construction) activity are intended to provide a general plan for controlling erosion and sediment within the project limits. The ESC Plan is based on field conditions at the time of plan development and an assumed sequence of construction for the project. The contractor, in conjunction with the City of Winchester Project Engineer and/or ESC Inspector, shall adjustthe location, quantity and type of erosion and sediment control items required based on the actual field conditions encountered at the time of construction and the actual scheduling and sequencing of the construction activities. Significant changes to the proposed ESC Plan (e.g., those that require an engineering analysis) shall be submitted to the applicable City of Winchester Hydraulics Engineer for review and approval. Any changes to the proposed ESC Plan must be noted on the designated record set of plans which shall be retained on the project site and made available upon request during normal business hours.

13. The areas beyond the project's construction area are to be protected from siltation. Perimeter controls such as silt fence, diversion dikes, turbidity curtains, etc. shall be installed prior to any grubbing operations or other earth moving activities.

14. Temporary earthen structures such as dikes and berms are to be stabilized immediately upon installation. Stabilization may include temporary or permanent seeding, riprap, aggregate, sod, mulching, and/or soil stabilization blankets and matting in conjunction with seeding.

15. All channel relocations are to be constructed during the earliest stage of construction and shall be constructed in accordance with all applicable permit requirements and shall be constructed in the dry wherever possible. Stabilization or vegetation shall be established before flow is redirected through the constructed area as directed by the Engineer.

16. The contractor shall plan and implement his land disturbance operations in order to:
  a. Control the volume and velocity of stormwater runoff within the site to minimize erosion.
  b. Control the peak flow rates, volume and velocity of stormwater discharges to minimize erosion at outlets and in downstream channels.
  c. Minimize the amount of soil exposed.
  d. Minimize the disturbance of steep slopes.
  e. Minimize sediment discharge from the site.
  f. Provide and maintain natural buffers around surface waters, direct stormwater runoff to vegetated areas and maximize stormwater infiltration, unless infeasible.
  g. Minimize soil compaction (except in those areas where compaction is required by the contract documents) and preserve topsoil where feasible.

** 17. The name of the individual(s) or contractor(s) responsible for the installation and maintenance of the erosion and sediment control measures shall be supplied by the contractor and maintained with the other SWPPP documents for this land disturbance (construction) activity.

18. Soil stockpiles temporarily placed within the project area or on VDOT right of way or easement shall be stabilized or protected with sediment trapping measures.

19. A construction entrance or other approved measure shall be installed at all locations where construction vehicular traffic access routes intersect a paved or a public road in order to minimize the transport of sediment by vehicular tracking onto the paved surface. Where sediment is transported onto a paved or a public road surface, the road shall be cleaned thoroughly at the end of each work day by shoveling or sweeping. Removed sediment shall be disposed of in accordance with Section 106.04 of the R&B Specifications.

Rinker Design Associates, P.C.
Civil Engineering - Surveying - Land Planning
Transportation - Environmental
Right of Way Services

Office Locations
9385 Discovery Boulevard, Suite 200, Manassas, VA 20109, Phone: (703) 368-7373, Fax: (703) 257-5443
4301 Dominion Boulevard, Suite 100, Glen Allen, VA 23060, Phone: (804) 612-0665, Fax: (804) 612-0668
927 Maple Grove Drive, Suite 105, Fredericksburg, VA 22407, Phone: (540) 548-4470, Fax: (540) 548-4471
www.RDAcivil.com

PROJECT MANAGER Perry Eisenach, P.E. - City of Winchester (540) 667-2085
SURVEYED BY, DATE Sidney Thomas, L.S. - Rinker Design Associates (703) 368-7373, October 2014
DESIGN BY John A. Giometti, P.E. - Rinker Design Associates (703) 334-0060
SUBSURFACE UTILITY BY, DATE Matthew Ranslem - Mid Atlantic Utility Locating (703) 378-0100, August 2014

STORMWATER POLLUTION PREVENTION PLAN (SWPPP) GENERAL INFORMATION SHEET

REVISED	STATE	STATE ROUTE	STATE PROJECT	SHEET NO.
	VA.	11	U000-138-R04 C501	2D(2)

DESIGN FEATURES RELATING TO CONSTRUCTION OR TO REGULATION AND CONTROL OF TRAFFIC MAY BE SUBJECT TO CHANGE AS DEEMED NECESSARY BY THE DEPARTMENT

The information contained in the SWPPP General Information sheets is intended to comply with the requirements of the VPDES General Permit For Discharges Of Stormwater From Construction Activities (the VPDES Construction Permit) issued July 1, 2014 and VDOT's approved Annual ESC and SWM Standards and Specifications.

The SWPPP General Information sheets are to be completed and included in the construction plan set (or other such documents) for land disturbance (construction) activities that disturb an area equal to or greater than 10,000 square feet, or equal to or greater than 2,500 square feet in the area defined as Tidewater, Virginia in the Virginia Chesapeake Bay Preservation Act.

The City of Winchester RLD will ensure that the information shown on the SWPPP General Information sheets is updated/revised as necessary in order to reflect changes that may occur during the construction phase of the land disturbing (construction) activity. The updated/revised sheets shall be maintained with the designated record set of plans (or other such documents)for the land disturbance (construction) activity.

SECTION III SWPPP

1. All documents related to the SWPPP for this land disturbance (construction) activity shall be maintained at the activity site and shall be readily available for review upon request during normal business hours. Such documents include, but are not limited to, the construction plans (or other such documents), the ESC Plan, the Pollution Prevention Plan, the post construction SWM Plan (if applicable), the VDOT R&B Standards and Specifications, Supplemental Specifications, Special Provisions and Special Provision Copied Notes. Documents related to stormwater pollution prevention which are not a part of those documents referenced above, such as a copies of the VPDES Construction Permit coverage letter (when applicable) and the VPDES General Permit For Discharges Of Stormwater From Construction Activities (when applicable) and those required to be developed by the contractor for pollution prevention associated with any on-site support facilities being included in the VPDES Construction Permit coverage for this land disturbance (construction) activity are to be maintained at the activity site with the other SWPPP documents for this land disturbance (construction) activity. Where no facilities are available at the activity site to maintain the SWPPP documents, they are to be kept by or with the designated RLD at a location convenient to the activity site where they would be made available for review upon request during normal business hours.

2. The SWPPP and any subsequent amendments, modifications and updates shall be implemented from commencement of land disturbance until termination of VPDES Construction Permit coverage or completion of land disturbance (construction) activities where no VPDES Construction Permit coverage is required.

** 3. For all on-site support facilities that will be included in the VPDES Construction Permit coverage for this land disturbance (construction) activity, the contractor shall develop a SWPPP in accordance with, but not limited to, Section 106.08, 107.02 and 107.16 of the VDOT Road and Bridge Specifications. The SWPPP for the on-site support facilities shall be maintained with and become a component of the SWPPP for this land disturbance (construction) activity. Support facilities shall include, but not be limited to, borrow and disposal areas, construction and waste material storage areas, equipment and vehicle washing, maintenance, storage and fueling areas, storageareas for fertilizers, fuels or chemicals, concrete wash out areas, sanitary waste facilities and any other areas that may generate a stormwater or non-stormwater discharge directly related to the construction site.

* 4. By completing and submitting the SWPPP Certification form LD-445E, the RLD, or his authorized representative, certifies that all documents identified herein to be supplied by the contractor will be reviewed, approved (as applicable) and included with the other SWPPP documents for this land disturbance (construction) activity prior to start of work in those areas identified by such information.

5. For those land disturbing (construction) activities requiring coverage under the VPDES Construction Permit, the SWPPP shall be made available for review upon the request of the DEQ, the EPA, the VSMP Authority, the VESCP Authority, local government officials or the operator of a municipal separate storm sewer system (MS4) receiving discharge from the construction site.

* 6. For those land disturbing (construction) activities requiring coverage under the VPDES Construction Permit, the City of Winchester RLD shall post, or have posted, a copy of the General Permit coverage letter and a copy of a completed LD-445A form, noting the name and contact information for the City of Winchester person responsible for the land disturbing (construction) activity and its SWPPP, outside the project's construction office along with other Federal and State mandated information. Where there is no construction office (e.g., a maintenance activity), the permit coverage letter and the LD-445A form are to be maintained with the other SWPPP documents for the land disturbing (construction) activity.

7. The SWPPP shall be made available for review by the public upon request. Such reviews shall be at a time and publicly accessible location convenient to the the City of Winchester and shall be scheduled during normal business hours and no less than once per month.

ACRONYMS

BMP - Best Management Practice
DEQ - Department of Environmental Quality
EPA - U.S. Environmental Protection Agency
ESC - Erosion and Sediment Control
IIM - Instructional and Informational Memorandum
R&B - Road and Bridge
RLD - Responsible Land Disturber
SWM - Stormwater Management
SWPPP - Stormwater Pollution Prevention Plan
TMDL - Total Maximum Daily Load
VDOT - Virginia Department of Transportation
VPDES - Virginia Pollutant Discharge Elimination System
VSMP - Virginia Stormwater Management Program
VESCP - Virginia Erosion and Sediment Control Program

SECTION IV POST CONSTRUCTION STORMWATER MANAGEMENT

Choose the appropriate note 1 or 2 that is applicable to the proposed post construction SWM Plan for this land disturbance (construction) activity. (Delete, strikethrough or mark as NA those notes not applicable.)

N/A ~~1. This land disturbance (construction) activity is grandfathered under Section 9VAC25-870-48 of the VSMP Regulations and utilizes the Part IIC technical criteria (i.e., Performance or Technology Based, MS 19, etc.) in Section 9VAC25-870-93 et.seq. of the VSMP Regulations.~~

2. This land disturbance (construction) activity utilizes the Part IIB technical criteria (i.e., Runoff Reduction Method, Energy Balance Equation, etc.) in Section 9VAC25-870-62 et seq. of the VSMP Regulations.

N/A ~~3. An exception for (number) pounds of phosphorus removal has been granted for this land disturbance (construction) activity by the DEQ in its letter dated (date).~~

N/A ~~4. The following exceptions to the Water Quantity criteria of the VSMP Regulation have been approved by the DEQ for this land disturbance (construction) activity: (list all approved exceptions and include a brief description of the exception, the date approved and the approving DEQ Office)~~

5. The permanent onsite SWM facilities or offsite strategies proposed to meet the water quality/quantity requirements for this land disturbance (construction) activity are listed in Section VI.

6. A description of all post-construction stormwater management measures that will be installed during the construction process to control pollutants in stormwater discharges after construction operations have been completed is included in the construction plan set (or other such documents) for this land disturbance (construction) activity.

7. All engineering calculations supporting the design of the post-construction stormwater management measures for this land disturbance (construction) activity, including an explanation of the technical basis used to select the practices, are contained in the project drainage file located in the City of Winchester Hydraulics Section and will be made available for review upon request during normal working business hours.

SECTION V - POLLUTION PREVENTION PLAN

1. The following non-stormwater discharges from this land disturbing (construction) activity and any on-site support facilities are prohibited:
   a. Wastewater from concrete washouts.
   b. Wastewater from the washout and cleanout of stucco, paint, form release oils, curing compounds and other construction materials.
   c. Fuels, oils or other pollutants used in vehicle and equipment operation and maintenance.
   d. Oils, toxic substances or hazardous substances from spills or other releases.
   e. Soaps, solvents or detergents used in equipment and vehicle washing.
   f. There shall be no discharge of floating solids or visible foam in other than trace amounts

2. The following non-stormwater discharges from this land disturbing (construction) activity and any on-site support facilities are allowed when discharged in compliance with the VPDES Construction Permit:
   a. Discharges from fire fighting activities.
   b. Fire hydrant flushings.
   c. Waters used to wash vehicles or equipment where soaps, solvents or detergents have not been used and the wash water has been filtered, settled or similarly treated prior to discharge.
   d. Water used to control dust that has been filtered, settled or similarly treated prior to discharge.
   e. Potable water sources including uncontaminated waterline flushings.
   f. Routine external building wash down where soaps, solvents or detergents have not been used and the wash water has been filtered, settled or similarly treated prior to discharge.

* Denotes information that is to be provided/completed by the City of Winchester
** Denotes information that is to be provided/completed by the contractor.

   g. Pavement wash waters where spills or leaks of toxic or hazardous materials have not occurred (or where all spilled or leaked material has been removed prior to washing), where soaps, solvents or detergents have not been used and where the wash water has been filtered, settled or similarly treated prior to discharge.
   h. Uncontaminated air conditioning or compressor condensate.
   i. Uncontaminated ground water or spring water.
   j. Foundation or footing drains where flows are not contaminated with process materials such as solvents.
   k. Uncontaminated excavation dewatering, including dewatering trenches and excavations that have been filtered, settled or similarly treated prior to discharge.
   l. Landscape irrigation.

** 3. The contractor shall develop a Pollution Prevention Plan to address any of his on-site operations that have a potential to generate a pollutant that may reasonably be expected to affect the quality of stormwater discharges from this land disturbance (construction) activity. The Pollution Prevention Plan shall be developed in accordance with, but not limited to, Sections 106.08, 107.02 and 107.16 of the VDOT Road and Bridge Specifications and shall include a narrative with appropriate plan detail and shall be provided on standard 8.5 x 11 inch paper or larger and shall:
   a. Identify the potential pollutant-generating activities and the pollutant that is expected to be exposed to stormwater.
   b. Describe the location where the potential pollutant-generating activities will occur, or if identified on the record set of plans, reference the record set of plans.
   c. Identify all non-stormwater discharges, as described in note two of this section, that are or will be commingled with stormwater discharges from the construction activity, including any on-site support activities.
   d. Identify the person(s) or contractor(s) responsible for implementing and maintaining the pollution prevention practice or practices for each pollutant-generating activity.
   e. Describe the pollution prevention practices and procedures that will be implemented to:
      1) Prevent and respond to leaks, spills, and other releases, including procedures for expeditiously stopping, containing, and cleaning up spills, leaks, and other releases, and procedures for reporting leaks, spills, and other releases in accordance with Section 107.16 of the VDOT Road and Bridge Specifications and the requirements within the VPDES Construction Permit.
      2) Prevent the discharge of spilled and leaked fuels and chemicals from vehicle fueling and maintenance activities.
      3) Prevent the discharge of soaps, solvents, detergents, and wash water from construction materials, including procedures for the clean-up of stucco, paint, form release oils, and curing compounds.
      4) Minimize the discharge of pollutants from vehicle and equipment washing, wheel wash water, and other types of washing.
      5) Direct concrete wash water into a leak-proof container or leak-proof settling basin. The container or basin shall be designed so that no overflows can occur due to inadequate sizing or precipitation. Hardened concrete wastes shall be removed and disposed of in a manner consistent with the handling of other construction wastes. Liquid concrete wastes shall be removed and disposed of in a manner consistent with the handling of other construction wash waters and shall not be discharged to surface waters.
      6) Minimize the discharge of pollutants from storage, handling, and disposal of construction products, materials, and wastes including building products (such as asphalt sealants, copper flashing, roofing materials, adhesives, and concrete admixtures), pesticides, herbicides, insecticides, fertilizers, landscape materials, construction and domestic wastes (such as packaging materials), scrap construction materials, masonry products, timber, pipe and electrical cuttings, plastics, styrofoam, concrete, and other trash or building materials.
      7) Prevent the discharge of fuels, oils, and other petroleum products, hazardous or toxic wastes, and sanitary wastes.
      8) Address any other discharge from any potential pollutant-generating activity not listed herein.
      9) Describe and implement procedures for providing pollution prevention awareness (including but not limited to prevention practices, disposal practices and appropriate disposal locations) for all applicable wastes (including any wash water), to appropriate personnel.

Revised 8/18/2017

Sheet 2 of 3

PROJECT MANAGER Perry Eisenach, P.E. - City of Winchester (540) 667-2085
SURVEYED BY, DATE Sidney Thomas, L.S. - Rinker Design Associates (703) 368-7373, October 2014
DESIGN BY John A. Glomett, P.E. - Rinker Design Associates (703) 334-0060
SUBSURFACE UTILITY BY, DATE Matthew Bansem - Mid Atlantic Utility Locating (703) 378-0100, August 2014

Office Locations
Corporate Headquarters
4101 Dickens Road
Suite 100
Richmond, VA 23230
Phone: (804) 358-2366
Fax: (804) 358-2369
4101 Dickens Road
Suite 100
Richmond, VA 23230
Phone: (804) 358-2366
Fax: (804) 358-2369
4101 Mayflower Drive
Suite 101
Fredericksburg, VA 22407
Phone: (540) 786-8520
Fax: (540) 786-8521
Rinker Design Associates, P.C.
Civil Engineering - Surveying - Environmental
Transportation - Land Development
Right of Way Services
SHOP DRAWING REVIEW

REVISED	STATE	STATE ROUTE	STATE PROJECT	SHEET NO.
	VA.	11	U000-138-R04 C501	2D(3)

STORMWATER POLLUTION PREVENTION PLAN (SWPPP)
GENERAL INFORMATION SHEET

The information contained in the SWPPP General Information sheets is intended to comply with the requirements of the VPDES General Permit For Discharges Of Stormwater From Construction Activities (the VPDES Construction Permit) issued July 1, 2014 and VDOT's approved Annual ESC and SWM Standards and Specifications.

The SWPPP General Information sheets are to be completed and included in the construction plan set (or other such documents) for land disturbance (construction) activities that disturb an area equal to or greater than 10,000 square feet, or equal to or greater than 2,500 square feet in the area defined as Tidewater, Virginia in the Virginia Chesapeake Bay Preservation Act.

The VDOT RLD will ensure that the information shown on the SWPPP General Information sheets is updated/revised as necessary in order to reflect changes that may occur during the construction phase of the land disturbing (construction) activity. The updated/revised sheets shall be maintained with the designated record set of plans (or other such documents) for the land disturbance (construction) activity.

DESIGN FEATURES RELATING TO CONSTRUCTION OR TO REGULATION AND CONTROL OF TRAFFIC MAY BE SUBJECT TO CHANGE AS DEEMED NECESSARY BY THE DEPARTMENT

ACRONYMS

BMP - Best Management Practice
DEQ - Department of Environmental Quality
EPA - U.S. Environmental Protection Agency
ESC - Erosion and Sediment Control
IIM - Instructional and Informational Memorandum
R&B - Road and Bridge
RLD - Responsible Land Disturber
SWM - Stormwater Management
SWPPP - Stormwater Pollution Prevention Plan
TMDL - Total Maximum Daily Load
VDOT - Virginia Department of Transportation
VPDES - Virginia Pollutant Discharge Elimination System
VSMP - Virginia Stormwater Management Program
VESCP - Virginia Erosion and Sediment Control Program

SECTION VI - PERMANENT BMP INFORMATION △

✱ Denotes information that is to be completed by the VDOT RLD.
( ) See note referenced by number in parentheses.

INSTALLED BMP INFORMATION
Table A
(VDOT Owned/Operated)

Plan Sheet(s)	BMP Type (See Table 1 and 3)	County or City	Latitude/Longitude (1) LAT	Latitude/Longitude (1) LONG	State Hydrologic Unit Code (7)	Receiving Stream Name (2)	Name of Impaired Water (9)	Acres Treated Per BMP (3) Impervious	Acres Treated Per BMP (3) Pervious	Acres Treated Per BMP (3) TOTAL	✱ BMP Maintenance ID Number (10)	BMP Maintenance Manual (11)	BMP Inspection Manual (11)
2J(0)-2J(8)*	SWM 1 (Wetpond Level 1) located downstream at Hope Drive	City of Winchester	39.1543°	78.1787°	PU16			2.45	1.33	3.78		SECTION 7	SECTION 7

* SWM facility plans and profiles are under separate cover for the Hope Drive Road Improvement Plans.

ALTERNATIVE BMP INFORMATION
Table B

BMP Type (See Table 2) (13)	Name of Nutrient Credit Generating Entity (6)	County or City (5)	Latitude/Longitude (1) (5) LAT	Latitude/Longitude (1) (5) LONG	State Hydrologic Unit Code (5) (7)	Project Acres Treated Per BMP (3) Impervious	Project Acres Treated Per BMP (3) Pervious	Project Acres Treated Per BMP (3) TOTAL	Nutrient Credits (lbs./acre/year) Acquired (6) (12)

Table 1: Permanent BMP Types (1999 Va. SWM Handbook)
Bio-Retention Basin
Bio-Retention Filter
Constructed Stormwater Wetlands
Extended Detention Basin
Extended Detention Basin Enhanced
Grassed Swale
Infiltration Basin
Infiltration Trench
Manufactured Treatment Device (MTD) (8)
Retention Basin I
Retention Basin II
Retention Basin III
Sand Filter
Vegetated Filter Strip
Other Approved Types (List Type)

Table 2: Alternative BMP Types
Comprehensive SWM Plan (Regional) Facility
Pollutant Loading Pro Rata Share Program
Purchase of Nutrients Credits
Other Approved Options (List Type) (4)

Table 3: Permanent BMP Types (BMP Clearing House)
Sheet Flow to Vegetated Filter Strip
Grass Channel
Soil Compost Amendment
Permeable Pavement
Infiltration Practice
Bioretention
Dry Swale
Wet Swale
Filtering Practice
Constructed Wetlands
Biorention Conservation
Extended Detention Pond
Wet Pond
Manufactured Treatment Device (MTD)(8)
Other Approved Types (List Type) (4)

NOTES:
(1) In decimal degrees to the nearest one ten-thousandth of a degree.

(2) For streams with no names, list "(Unnamed Tributary to closest stream name)".

(3) Show acres treated to the nearest one tenth acre.

(4) Include agreements with off-site BMP owners.

(5) Information pertains to the alternative BMP option location, where applicable. Exception - Not required for nutrient credit purchase option.

(6) Applies to the purchase of nutrient credits only.

(7) Virginia 6th Order HUC (VAHU6) Example - YO30.

(8) Final approved shop drawings of Manufactured Treatment Devices (MTDs) are to be included with the BMP information submitted with the LD-445D form.

(9) List the name of any impaired water to which the BMP discharges. The determination of impaired water shall be based on those streams listed as impaired in the DEQ 2012 305(b)/303(d) Water Quality Assessment Integrated Report and shall be the first named waterbody to which the BMP discharges. The impaired waters are those impaired by sediment, total suspended solids, turbidity, nitrogen or phosphorus. These pollutants are considered benthic impairments.

(10) BMP Maintenance ID Number is to be assigned by the District Infrastructure Manager at permit termination or project completion.

(11) Provide the section of each Maintenance manual that pertains to the type of BMP. Both manuals can be found at www.vdot.virginia.gov/business/manuals in the Maintenance selections.
Example: Section 4 would be noted for both the maintenance and inspection manuals for a Bioretention I infiltration BMP.

(12) Nutrient credits purchased to the nearest one hundredth pound.

△ Any changes to the proposed SWM Plan or BMPs necessitated during the construction phase of the project that affects the proposed construction details or potentially affects the information shown in the BMP Tables A and/or B shall be coordinated by the VDOT RLD with the appropriate VDOT District Hydraulics Engineer. The construction plans and the BMP Tables A and/or B are to be formally revised to reflect any authorized/approved changes to the proposed SWM Plan and/or the proposed BMP construction details. All plan revisions shall be completed in accordance with the Road Design Manual and the Construction Division IIM-CD-2013-12.01, signed and sealed in accordance with Department's sealing and signing policy IIM-LD-243 and filed with the record set of construction plans maintained in the VDOT Central Office Plan File Room (Falcon Web Suite). Prior to submitting for termination of coverage under the VPDES General Permit For The Discharge Of Stormwater From Construction Activities, the RLD shall have the District Maintenance Infrastructure Manager review the BMPs installed with the project (BMP Table A) for acceptance of maintenance responsibility and to obtain a Maintenance ID number for each BMP listed in BMP Table A. The RLD shall use the information in BMP Tables A and B along with the assigned Maintenance ID number and the date that the BMP became functional as a permanent control measure (for BMPs in Table A only) to complete the LD-445D form when certifying the construction of the BMPs and submitting for termination of coverage under the VPDES General Permit For The Discharge Of Stormwater From Construction Activities.

Revised 9/27/2017

PROJECT MANAGER Perry Eisenach, P.E. - City of Winchester (540) 667-2085
SURVEYED BY, DATE Sidney Thomas, L.S. - Rinker Design Associates (703) 368-7373, October 2014
DESIGN BY John A. Giometti, P.E. - Rinker Design Associates (703) 334-0060
SUBSURFACE UTILITY BY, DATE Matthew Banisim - Mid Atlantic Utility Locating (703) 378-0100, August 2014

Rinker Design Associates, P.C.
Civil Engineering • Surveying • Environmental
Transportation • Land Development • Right of Way Services
Office Locations
Main Office: 107 Mary Jane Drive, Front Royal, VA 22630 Phone: (540) 635-7159 Fax: (540) 635-7160
Winchester: 107 Kent Avenue, Suite 100, Winchester, VA 22601 Phone: (540) 667-2085 Fax: (540) 667-2086
Leesburg: 1012 Ft. Evans Road, Suite 100, Leesburg, VA 20150 Phone: (703) 334-0060 Fax: (703) 334-0061

REVISED	STATE	ROUTE	PROJECT	SHEET NO.
	VA.	11	U000-138-R04 P101, R201, C501	3

BRIAN P. KOMAR Lic. No. 045169 — PROFESSIONAL ENGINEER — COMMONWEALTH OF VIRGINIA
Brian Komar 2020.02.14 11:07:08-05'00'
Rinker Design Assoc., P.C. Fredericksburg, Virginia DRAINAGE ENGINEER

JOHN A. GIOMETTI Lic. No. 032300 — PROFESSIONAL ENGINEER — COMMONWEALTH OF VIRGINIA
John A Giometti 2020.02.14 17:10:28-05'00'
Rinker Design Assoc., P.C. Fredericksburg, Virginia ROADWAY ENGINEER

DESIGN FEATURES RELATING TO CONSTRUCTION OR TO REGULATION AND CONTROL OF TRAFFIC MAY BE SUBJECT TO CHANGE AS DEEMED NECESSARY BY THE DEPARTMENT

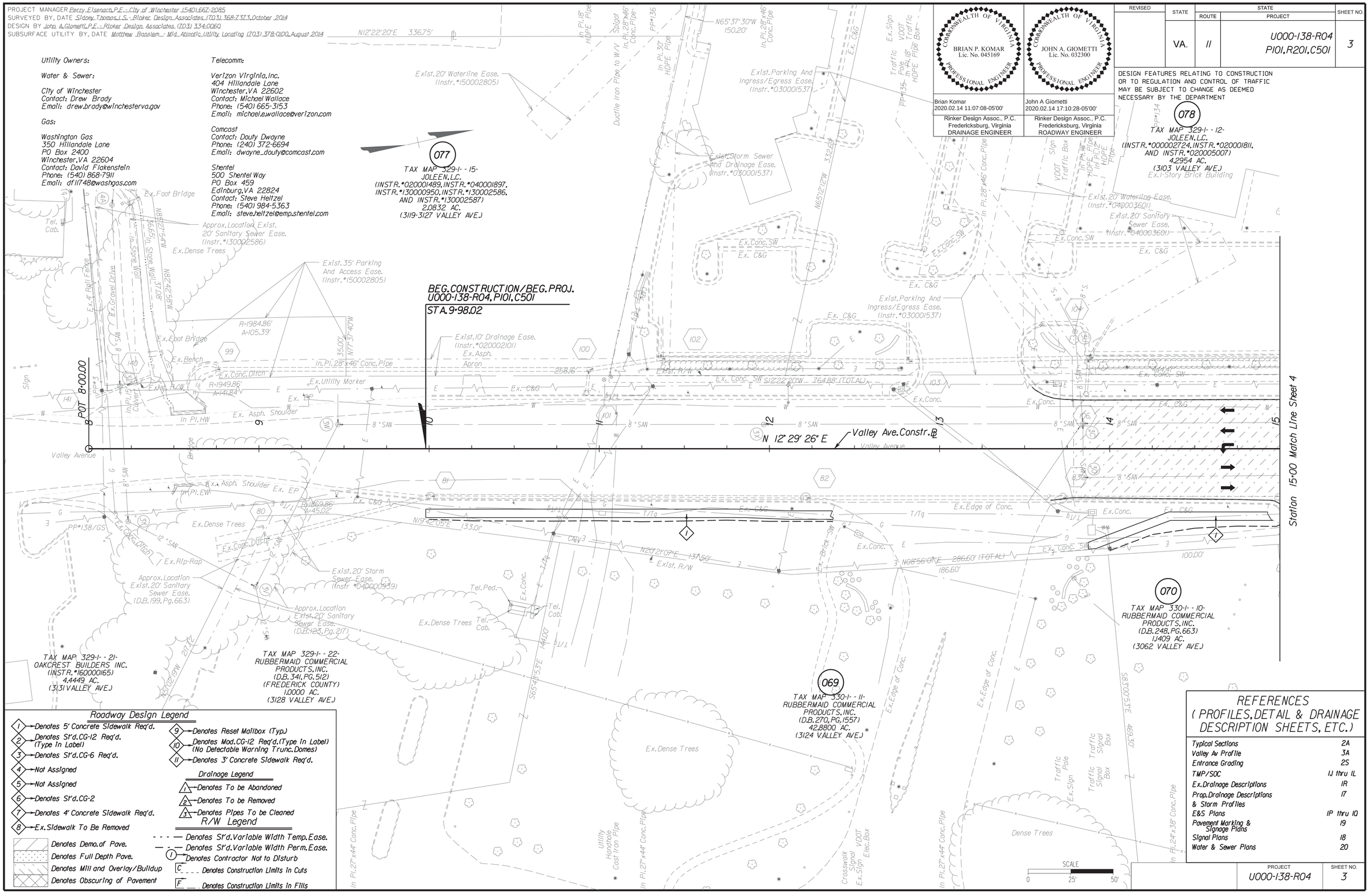

REFERENCES (PROFILES, DETAIL & DRAINAGE DESCRIPTION SHEETS, ETC.)

Typical Sections	2A
Valley Av Profile	3A
Entrance Grading	2S
TMP/SOC	1J thru 1L
Ex. Drainage Descriptions	1R
Prop. Drainage Descriptions & Storm Profiles	1T
E&S Plans	1P thru 1Q
Pavement Marking & Signage Plans	1S
Signal Plans	1B
Water & Sewer Plans	2O

PROJECT	SHEET NO.
U000-138-R04	3

2/14/2020
9:05:34 AM

d10301300 3a.dgn
Plotted By: mbeales

PROJECT MANAGER Perry Eisenach, P.E. - City of Winchester (540) 667-2085
SURVEYED BY, DATE Sidney Thomas, L.S. - Rinker Design Associates (703) 368-7373, October 2014
DESIGN BY John A. Giometti, P.E. - Rinker Design Associates (703) 334-0060
SUBSURFACE UTILITY BY, DATE Matthew Bansiem - Mid Atlantic Utility Locating (703) 378-0100, August 2014

Office Locations
Corporate Headquarters: 10437 Innovation Drive, Suite 190, Fairfax, VA 22031, Phone: (703) 267-1000, Fax: (703) 267-1010
Northern Virginia: 207 Mapp Drive, Suite 101, Winchester, VA 22601, Phone: (540) 667-2085, Fax: (540) 667-2086
Richmond: 4437 Brownsboro Boulevard, Suite 105, Richmond, VA 23060, Phone: (804) 346-8000, Fax: (804) 346-8001
Rinker Design Associates, P.C.
Civil Engineering • Surveying • Land Planning
Transportation • Environmental
Right of Way Services

PROFILE RTE. 11
STATIONS 8+00 TO 15+00

COMMONWEALTH OF VIRGINIA
BRIAN P. KOMAR
Lic. No. 045169
PROFESSIONAL ENGINEER
Brian Komar
2020.02.14 11:06:48-05'00'
Rinker Design Assoc., P.C.
Fredericksburg, Virginia
DRAINAGE ENGINEER

COMMONWEALTH OF VIRGINIA
JOHN A. GIOMETTI
Lic. No. 032300
PROFESSIONAL ENGINEER
Rinker Design Assoc., P.C.
Fredericksburg, Virginia
ROADWAY ENGINEER

REVISED	STATE	STATE ROUTE	STATE PROJECT	SHEET NO.
	VA.	11	U000-138-R04 P101, R201, C501	3A

DESIGN FEATURES RELATING TO CONSTRUCTION OR TO REGULATION AND CONTROL OF TRAFFIC MAY BE SUBJECT TO CHANGE AS DEEMED NECESSARY BY THE DEPARTMENT

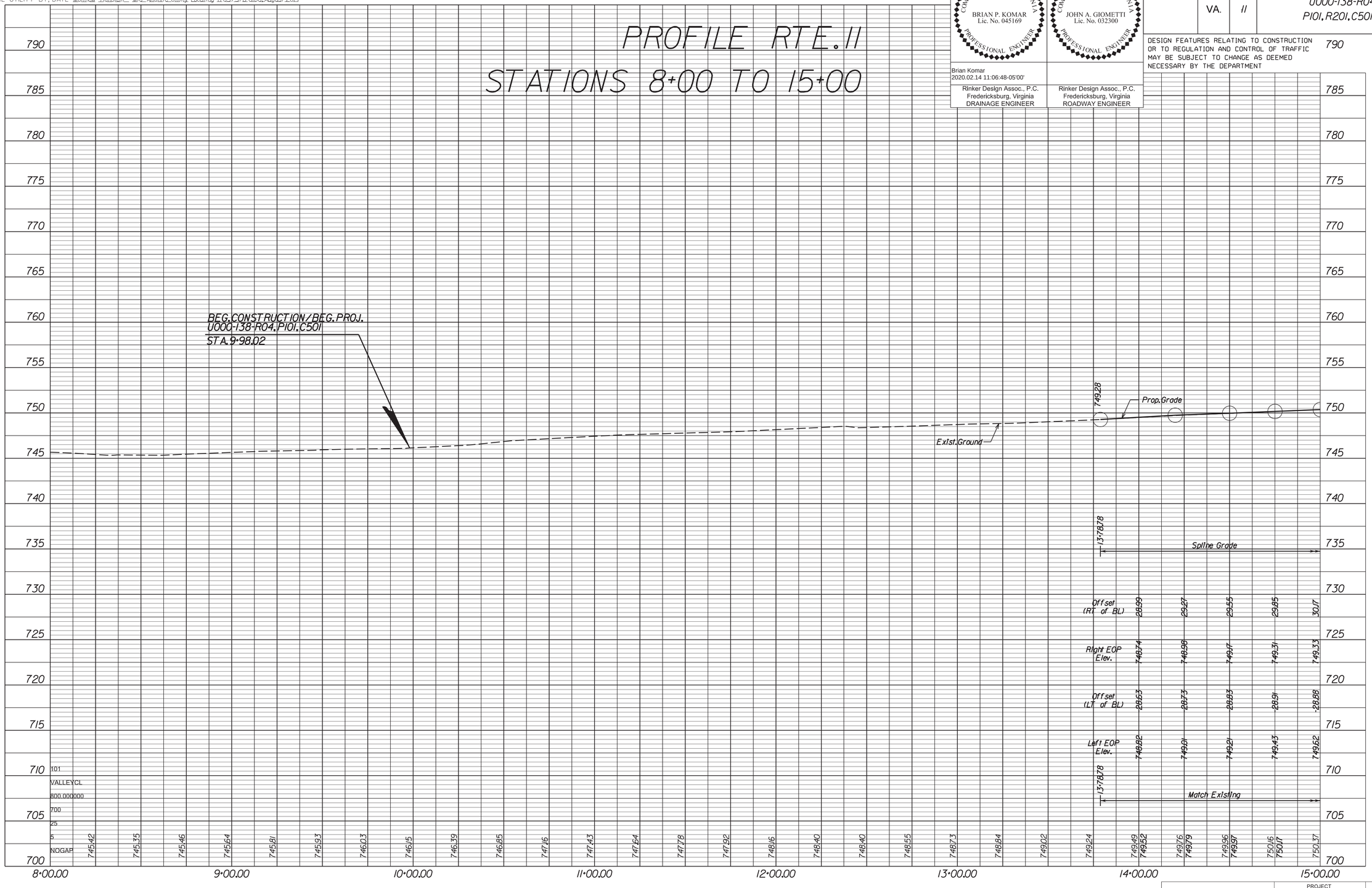

PROJECT	SHEET NO.
U000-138-R04	3A

2/14/2020
9:05:38 AM

d10301300 4.dgn
Plotted By: mbeales

PROJECT MANAGER Perry Eisenach, P.E. - City of Winchester (540) 667-2085
SURVEYED BY, DATE Sidney Thomas, L.S. - Rinker Design Associates (703) 368-7373, October 2014
DESIGN BY John A. Giometti, P.E. - Rinker Design Associates (703) 334-0060
SUBSURFACE UTILITY BY, DATE Matthew Bansiem - Mid Atlantic Utility Locating (703) 378-0100, August 2014

Rinker Design Associates, P.C.
Civil Engineering • Surveying • Environmental
Transportation • Land Development • Right of Way Services
Office Locations
Main Office: 10641 Main Street, Fairfax, VA 22030 Phone: (703) 591-2626 Fax: (703) 591-0165
107 N. Kent Street, Suite 100, Winchester, VA 22601 Phone: (540) 667-2085 Fax: (540) 667-0497
4101 Plaza Drive, Suite 100, Fredericksburg, VA 22407 Phone: (540) 786-8283 Fax: (540) 786-8287

REVISED	STATE	STATE ROUTE	STATE PROJECT	SHEET NO.
12-13-2018 04-24-2019	VA.	11	U000-138-R04 R201, C501	4

DESIGN FEATURES RELATING TO CONSTRUCTION OR TO REGULATION AND CONTROL OF TRAFFIC MAY BE SUBJECT TO CHANGE AS DEEMED NECESSARY BY THE DEPARTMENT

COMMONWEALTH OF VIRGINIA — BRIAN P. KOMAR, Lic. No. 045169 — PROFESSIONAL ENGINEER
Brian Komar 2020.02.14 11:06:25-05'00'
Rinker Design Assoc., P.C. Fredericksburg, Virginia DRAINAGE ENGINEER

COMMONWEALTH OF VIRGINIA — JOHN A. GIOMETTI, Lic. No. 032300 — PROFESSIONAL ENGINEER
John A Giometti 2020.02.14 17:10:05-05'00'
Rinker Design Assoc., P.C. Fredericksburg, Virginia ROADWAY ENGINEER

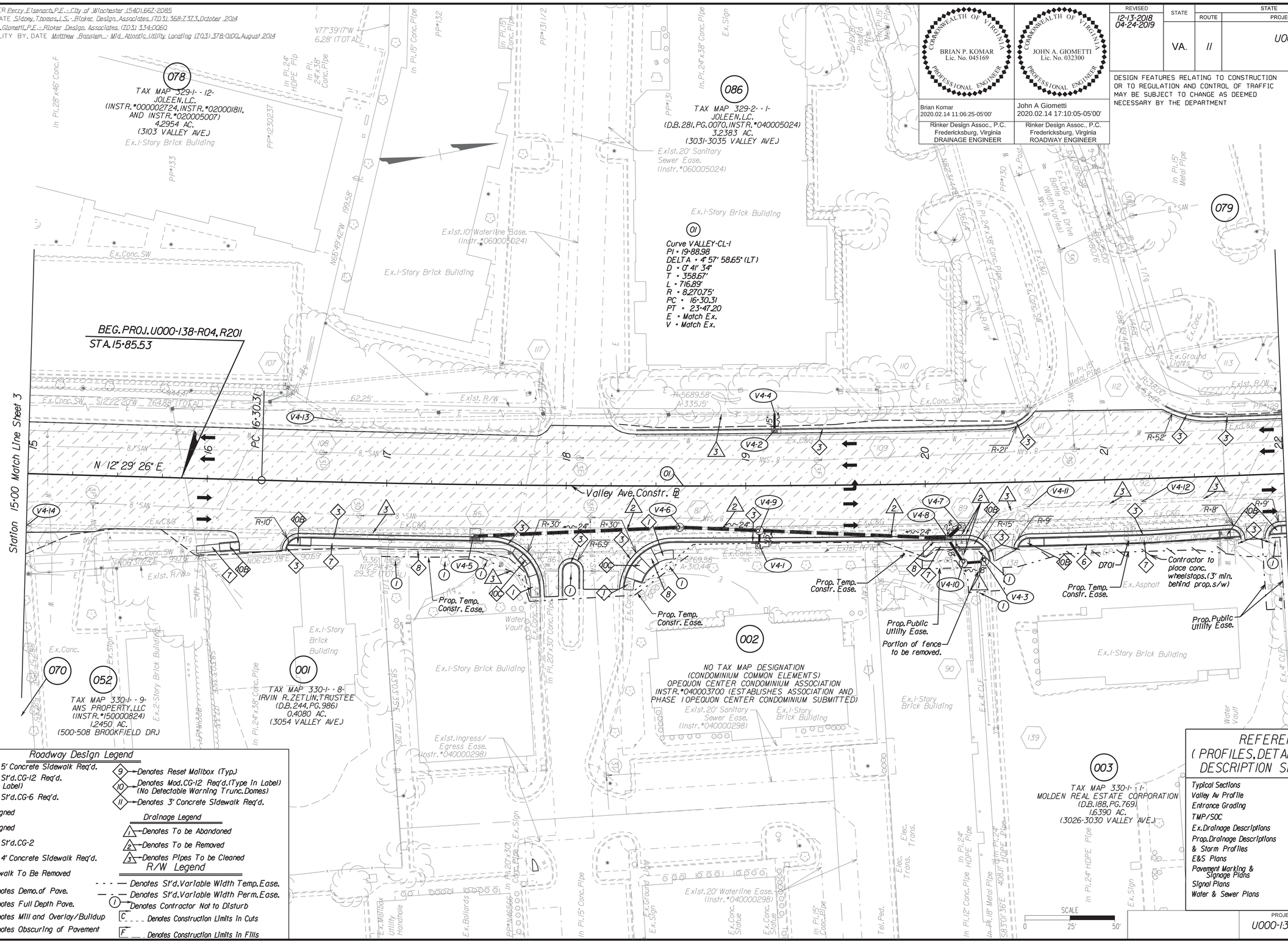

Roadway Design Legend

1. Denotes 5' Concrete Sidewalk Req'd.
2. Denotes St'd. CG-12 Req'd. (Type In Label)
3. Denotes St'd. CG-6 Req'd.
4. Not Assigned
5. Not Assigned
6. Denotes St'd. CG-2
7. Denotes 4' Concrete Sidewalk Req'd.
8. Ex. Sidewalk To Be Removed
9. Denotes Reset Mailbox (Typ.)
10. Denotes Mod. CG-12 Req'd. (Type In Label) (No Detectable Warning Trunc. Domes)
11. Denotes 3' Concrete Sidewalk Req'd.

Denotes Demo. of Pave.
Denotes Full Depth Pave.
Denotes Mill and Overlay/Buildup
Denotes Obscuring of Pavement

Drainage Legend

1. Denotes To be Abandoned
2. Denotes To be Removed
3. Denotes Pipes To be Cleaned

R/W Legend

- - - — Denotes St'd. Variable Width Temp. Ease.
— - — Denotes St'd. Variable Width Perm. Ease.
(1) Denotes Contractor Not to Disturb
C _ _ _ Denotes Construction Limits In Cuts
F _ _ _ Denotes Construction Limits In Fills

REFERENCES (PROFILES, DETAIL & DRAINAGE DESCRIPTION SHEETS, ETC.)

Typical Sections	2A
Valley Av Profile	4A
Entrance Grading	2S
TMP/SOC	1J thru 1L
Ex. Drainage Descriptions	1R
Prop. Drainage Descriptions & Storm Profiles	17
E&S Plans	1P thru 10
Pavement Marking & Signage Plans	19
Signal Plans	18
Water & Sewer Plans	20

PROJECT	SHEET NO.
U000-138-R04	4

PROJECT MANAGER Perry Eisenach, P.E. - City of Winchester (540) 667-2085
SURVEYED BY, DATE Sidney Thomas, L.S. - Rinker Design Associates (703) 368-7373, October 2014
DESIGN BY John A. Giometti, P.E. - Rinker Design Associates (703) 334-0060
SUBSURFACE UTILITY BY, DATE Matthew Ransom - Mid Atlantic Utility Locating (703) 378-0100, August 2014

Office Locations
Main Office
207 Maple Avenue East
Suite 100
Vienna, VA 22180
Phone: (703) 334-0060
Fax: (703) 255-5507

207 Maple Avenue East
Suite 100
Vienna, VA 22180
Phone: (703) 334-0060
Fax: (703) 255-5507

207 Maple Avenue East
Suite 100
Vienna, VA 22180
Phone: (703) 334-0060
Fax: (703) 255-5507

Rinker Design Associates, P.C.
Civil Engineering - Surveying - Transportation
Environmental - Emergency Services
Right of Way Services
SINCE ESTABLISHED IN 1969

REVISED	STATE	ROUTE	PROJECT	SHEET NO.
	VA.	11	U000-138-R04 R201, C501	4A

DESIGN FEATURES RELATING TO CONSTRUCTION OR TO REGULATION AND CONTROL OF TRAFFIC MAY BE SUBJECT TO CHANGE AS DEEMED NECESSARY BY THE DEPARTMENT

COMMONWEALTH OF VIRGINIA
BRIAN P. KOMAR
Lic. No. 045169
PROFESSIONAL ENGINEER
Brian Komar
2020.02.14 11:06:06-05'00'
Rinker Design Assoc., P.C.
Fredericksburg, Virginia
DRAINAGE ENGINEER

COMMONWEALTH OF VIRGINIA
JOHN A. GIOMETTI
Lic. No. 032300
PROFESSIONAL ENGINEER
John A Giometti
2020.02.14 17:09:44-05'00'
Rinker Design Assoc., P.C.
Fredericksburg, Virginia
ROADWAY ENGINEER

PROFILE RTE. 11
STATIONS 15+00 TO 22+00

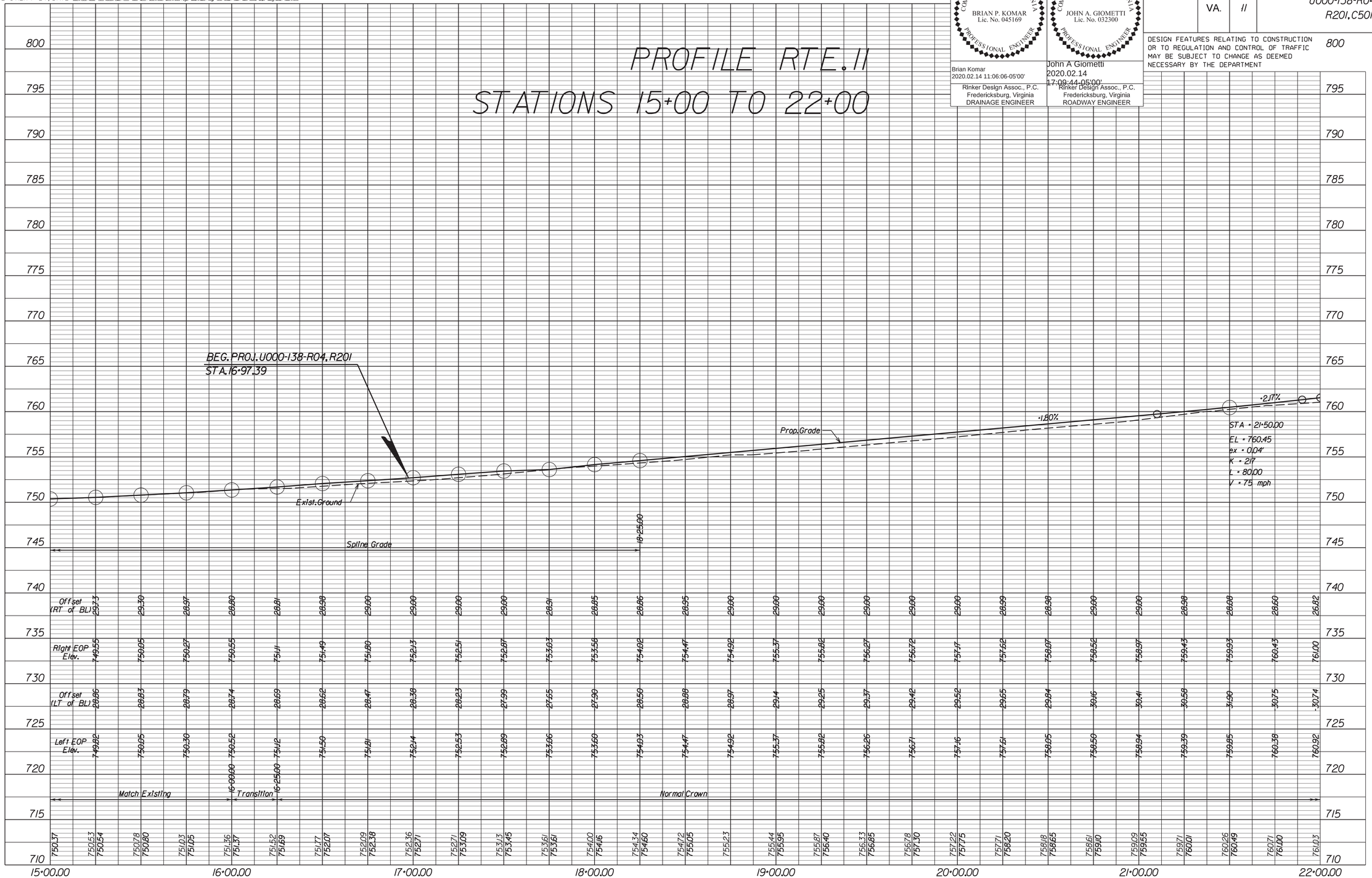

PROJECT	SHEET NO.
U000-138-R04	4A

2/14/2020
9:05:45 AM

dl0301300 5.dgn
Plotted By: mbeales

PROJECT MANAGER Perry Eisenach, P.E. - City of Winchester (540) 667-2085
SURVEYED BY, DATE Sidney Thomas, L.S. - Rinker Design Associates (703) 368-7373, October 2014
DESIGN BY John A. Giometti, P.E. - Rinker Design Associates (703) 334-0060
SUBSURFACE UTILITY BY, DATE Matthew Bansiem - Mid Atlantic Utility Locating (703) 378-0100, August 2014

Rinker Design Associates, P.C.
Civil Engineering - Surveying - Environmental
Transportation - Land Development - Right of Way Services
Office Locations
Main Office: 107 Mason Street, Front Royal, VA 22630 Phone: (540) 635-7179 Fax: (540) 635-7180
Winchester: 107 Mason Street, Front Royal, VA 22630 Phone: (540) 635-7179 Fax: (540) 635-7180
Fredericksburg: 2001 Princess Anne Street, Suite 100, Fredericksburg, VA 22401 Phone: (540) 373-8860 Fax: (540) 373-8887
Leesburg: 1921 Gallows Road, Suite 100, Vienna, VA 22182 Phone: (703) 334-0060 Fax: (703) 334-0061

BRIAN P. KOMAR
Lic. No. 045169
COMMONWEALTH OF VIRGINIA
PROFESSIONAL ENGINEER
Brian Komar
2020.02.14 11:05:46-05'00'
Rinker Design Assoc., P.C.
Fredericksburg, Virginia
DRAINAGE ENGINEER

JOHN A. GIOMETTI
Lic. No. 032300
COMMONWEALTH OF VIRGINIA
PROFESSIONAL ENGINEER
John A Giometti
2020.02.14 17:09:20-05'00'
Rinker Design Assoc., P.C.
Fredericksburg, Virginia
ROADWAY ENGINEER

REVISED	STATE	STATE ROUTE	STATE PROJECT	SHEET NO.
	VA.	11	U000-138-R04 R201,C501	5

DESIGN FEATURES RELATING TO CONSTRUCTION OR TO REGULATION AND CONTROL OF TRAFFIC MAY BE SUBJECT TO CHANGE AS DEEMED NECESSARY BY THE DEPARTMENT

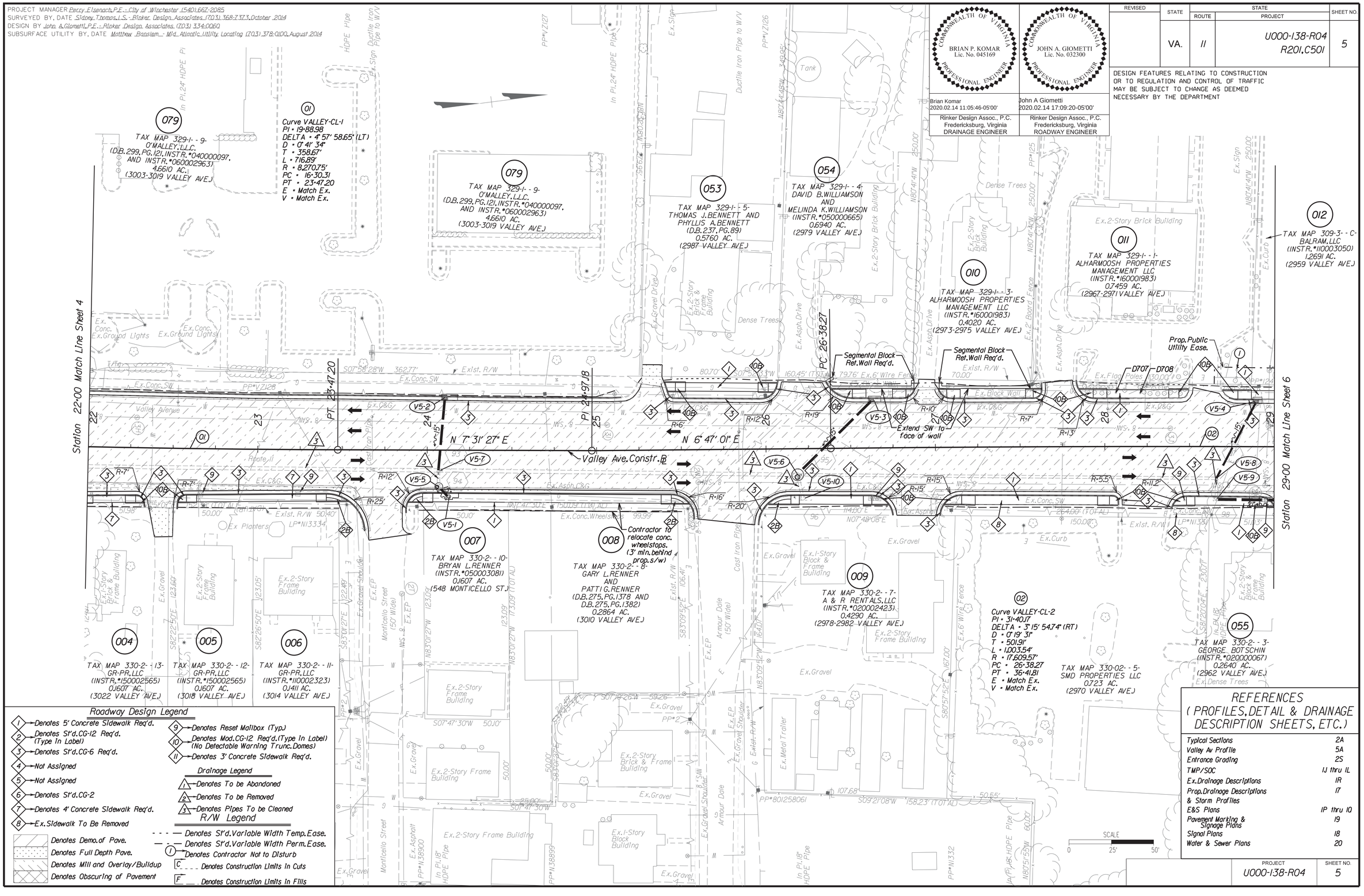

Roadway Design Legend

1. Denotes 5' Concrete Sidewalk Req'd.
2. Denotes St'd. CG-12 Req'd. (Type In Label)
3. Denotes St'd. CG-6 Req'd.
4. Not Assigned
5. Not Assigned
6. Denotes St'd. CG-2
7. Denotes 4' Concrete Sidewalk Req'd.
8. Ex. Sidewalk To Be Removed
9. Denotes Reset Mailbox (Typ.)
10. Denotes Mod. CG-12 Req'd. (Type In Label) (No Detectable Warning Trunc. Domes)
11. Denotes 3' Concrete Sidewalk Req'd.

Denotes Demo. of Pave.
Denotes Full Depth Pave.
Denotes Mill and Overlay/Buildup
Denotes Obscuring of Pavement

Drainage Legend

1. Denotes To be Abandoned
2. Denotes To be Removed
3. Denotes Pipes To be Cleaned

R/W Legend

- - - — Denotes St'd. Variable Width Temp. Ease.
— - — Denotes St'd. Variable Width Perm. Ease.
(I) Denotes Contractor Not to Disturb
C _ _ _ Denotes Construction Limits In Cuts
F _ _ _ Denotes Construction Limits In Fills

REFERENCES (PROFILES, DETAIL & DRAINAGE DESCRIPTION SHEETS, ETC.)

Typical Sections	2A
Valley Av Profile	5A
Entrance Grading	2S
TMP/SOC	1J thru 1L
Ex. Drainage Descriptions	1R
Prop. Drainage Descriptions & Storm Profiles	1T
E&S Plans	1P thru 1Q
Pavement Marking & Signage Plans	1S
Signal Plans	1R
Water & Sewer Plans	2O

PROJECT	SHEET NO.
U000-138-R04	5

2/14/2020
9:05:48 AM

d10301300 5a.dgn
Plotted By: mbeales

PROJECT MANAGER Perry Eisenach, P.E. - City of Winchester (540) 667-2085
SURVEYED BY, DATE Sidney Thomas, L.S. - Rinker Design Associates (703) 368-7373, October 2014
DESIGN BY John A. Giometti, P.E. - Rinker Design Associates (703) 334-0060
SUBSURFACE UTILITY BY, DATE Matthew Bansiem - Mid Atlantic Utility Locating (703) 378-0100, August 2014

Office Locations
Rinker Design Associates, P.C.
Civil Engineering • Surveying • Environmental Planning
Transportation • Land Development • Right of Way Services
SMALL BUSINESS
107 Mill Stone Road, Suite 101, Stafford, VA 22554, Phone: (540) 659-0440, Fax: (540) 659-0443
400 Kimball Avenue, Suite 101, N. Tonawanda, NY 14150, Phone: (716) 693-1283, Fax: (716) 693-1284
4101 Fairfax Drive, Suite 100, Arlington, VA 22203, Phone: (703) 334-0060, Fax: (703) 334-0221

PROFILE RTE. 11
STATIONS 22+00 TO 29+00

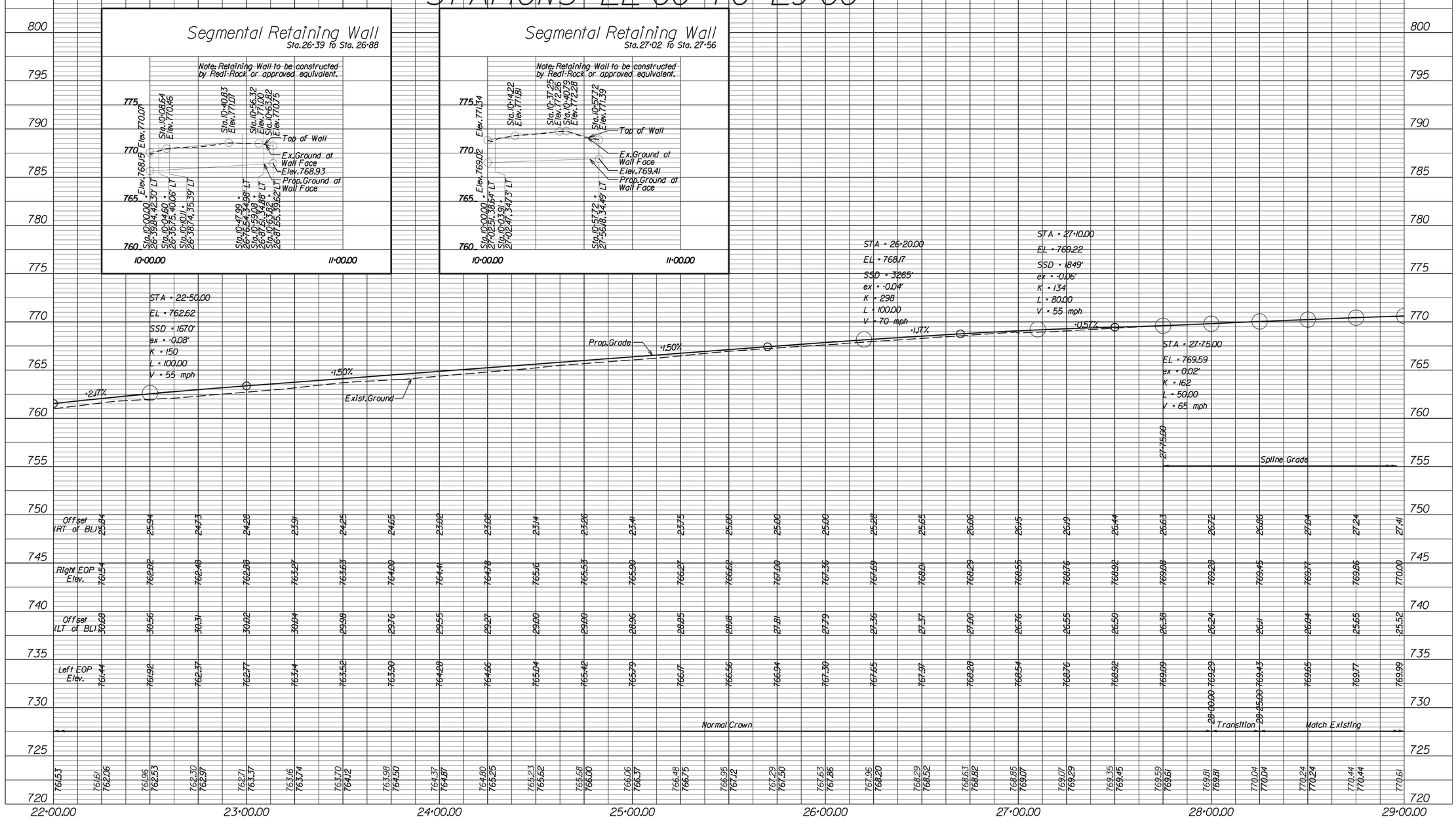

COMMONWEALTH OF VIRGINIA
BRIAN P. KOMAR
Lic. No. 045169
PROFESSIONAL ENGINEER
Brian Komar
2020.02.14 11:03:20-05'00'
Rinker Design Assoc., P.C.
Fredericksburg, Virginia
DRAINAGE ENGINEER

COMMONWEALTH OF VIRGINIA
JOHN A. GIOMETTI
Lic. No. 032300
PROFESSIONAL ENGINEER
John A Giometti
2020.02.14 17:09:02-05'00'
Rinker Design Assoc., P.C.
Fredericksburg, Virginia
ROADWAY ENGINEER

REVISED	STATE	STATE ROUTE	STATE PROJECT	SHEET NO.
	VA.	11	U000-138-R04 R201, C501	5A

DESIGN FEATURES RELATING TO CONSTRUCTION OR TO REGULATION AND CONTROL OF TRAFFIC MAY BE SUBJECT TO CHANGE AS DEEMED NECESSARY BY THE DEPARTMENT

PROJECT	SHEET NO.
U000-138-R04	5A

2/14/2020
9:05:51 AM

d10301 3006.dgn
Plotted By: mbeales

PROJECT MANAGER Perry Eisenach, P.E. - City of Winchester (540) 667-2085
SURVEYED BY, DATE Sidney Thomas, L.S. - Rinker Design Associates (703) 368-7373, October 2014
DESIGN BY John A. Giometti, P.E. - Rinker Design Associates (703) 334-0060
SUBSURFACE UTILITY BY, DATE Matthew Bansiem - Mid Atlantic Utility Locating (703) 378-0100, August 2014

Rinker Design Associates, P.C.
Civil Engineering • Surveying • Environmental
Transportation • Land Development • Right of Way Services
SMALL BUSINESS

Office Locations
Main Office
107 Mill Ridge Road
Lynchburg, VA 24502
Phone: (434) 239-0327
Fax: (434) 239-0328

Winchester Office
107 Kent Street
Winchester, VA 22601
Phone: (540) 667-2085
Fax: (540) 667-2089

Fredericksburg Office
1001 Princess Anne Street
Suite 100
Fredericksburg, VA 22401
Phone: (540) 373-4650
Fax: (540) 373-0149

Northern Virginia Office
4661 Fairfax Drive
Suite 100
Arlington, VA 22203
Phone: (703) 334-0060
Fax: (703) 522-5548

BRIAN P. KOMAR
Lic. No. 045169
COMMONWEALTH OF VIRGINIA
PROFESSIONAL ENGINEER

Brian Komar
2020.02.14 11:02:54-05'00'

Rinker Design Assoc., P.C.
Fredericksburg, Virginia
DRAINAGE ENGINEER

JOHN A. GIOMETTI
Lic. No. 032300
COMMONWEALTH OF VIRGINIA
PROFESSIONAL ENGINEER

John A Giometti
2020.02.14 17:08:17-05'00'

Rinker Design Assoc., P.C.
Fredericksburg, Virginia
ROADWAY ENGINEER

REVISED	STATE	STATE ROUTE	STATE PROJECT	SHEET NO.
	VA.	11	U000-138-R04 R201,C501	6

DESIGN FEATURES RELATING TO CONSTRUCTION OR TO REGULATION AND CONTROL OF TRAFFIC MAY BE SUBJECT TO CHANGE AS DEEMED NECESSARY BY THE DEPARTMENT

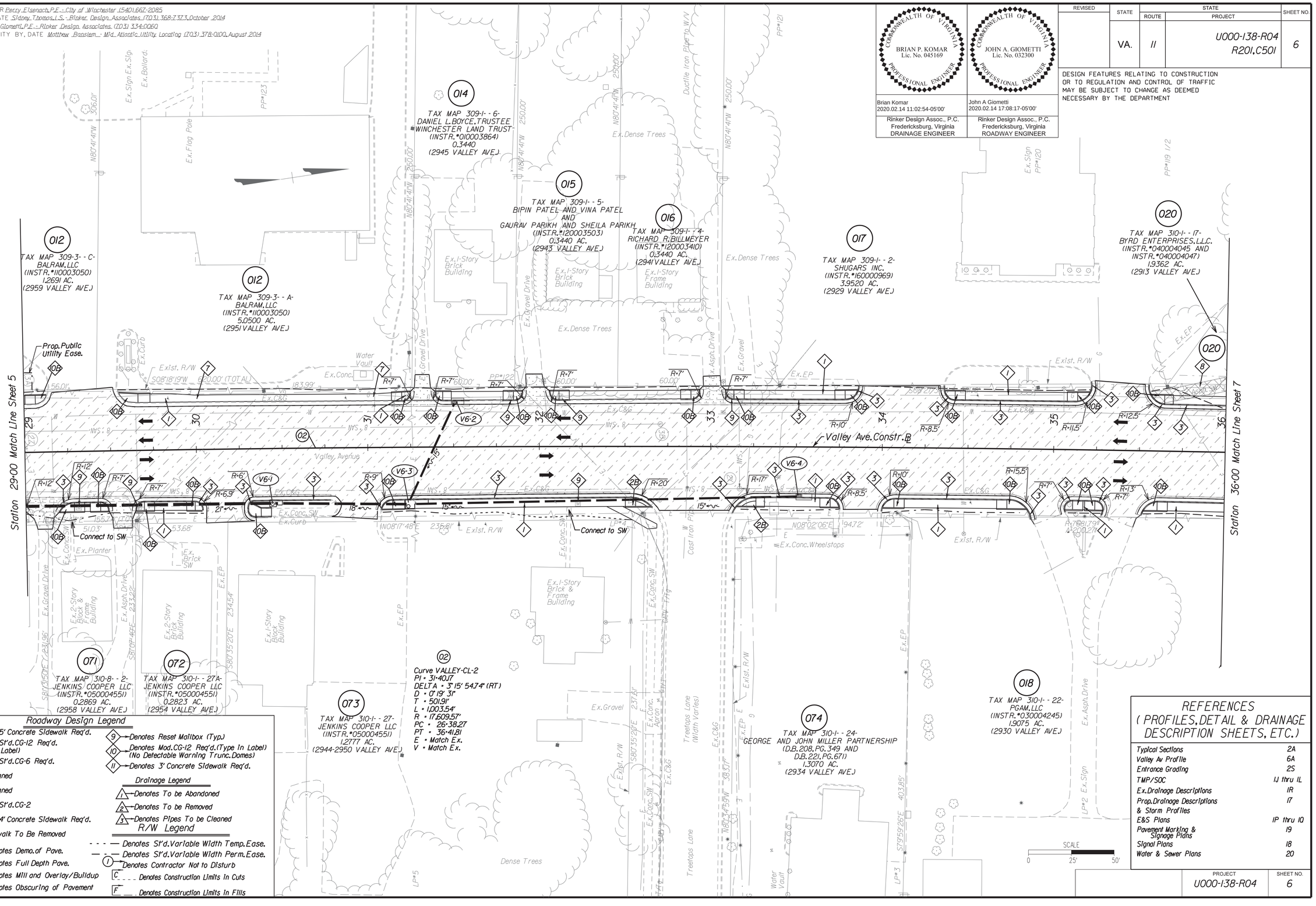

Roadway Design Legend

1. Denotes 5' Concrete Sidewalk Req'd.
2. Denotes St'd. CG-12 Req'd. (Type In Label)
3. Denotes St'd. CG-6 Req'd.
4. Not Assigned
5. Not Assigned
6. Denotes St'd. CG-2
7. Denotes 4' Concrete Sidewalk Req'd.
8. Ex. Sidewalk To Be Removed
9. Denotes Reset Mailbox (Typ.)
10. Denotes Mod. CG-12 Req'd. (Type In Label) (No Detectable Warning Trunc. Domes)
11. Denotes 3' Concrete Sidewalk Req'd.

Denotes Demo. of Pave.
Denotes Full Depth Pave.
Denotes Mill and Overlay/Buildup
Denotes Obscuring of Pavement

Drainage Legend

1. Denotes To be Abandoned
2. Denotes To be Removed
3. Denotes Pipes To be Cleaned

R/W Legend

- - - — Denotes St'd. Variable Width Temp. Ease.
— · · — Denotes St'd. Variable Width Perm. Ease.
(1) Denotes Contractor Not to Disturb
C - - - Denotes Construction Limits In Cuts
F ___ Denotes Construction Limits In Fills

REFERENCES (PROFILES, DETAIL & DRAINAGE DESCRIPTION SHEETS, ETC.)

Typical Sections	2A
Valley Av Profile	6A
Entrance Grading	2S
TMP/SOC	1J thru 1L
Ex. Drainage Descriptions	1R
Prop. Drainage Descriptions & Storm Profiles	1T
E&S Plans	1P thru 1Q
Pavement Marking & Signage Plans	1S
Signal Plans	1B
Water & Sewer Plans	2O

PROJECT	SHEET NO.
U000-138-R04	6

2/14/2020
9:05:54 AM

d10301300 6a.dgn
Plotted By: mbeales

PROJECT MANAGER Perry Eisenach, P.E. - City of Winchester (540) 667-2085
SURVEYED BY, DATE Sidney Thomas, L.S. - Rinker Design Associates (703) 368-7373, October 2014
DESIGN BY John A. Giometti, P.E. - Rinker Design Associates (703) 334-0060
SUBSURFACE UTILITY BY, DATE Matthew Bansten - Mid Atlantic Utility Locating (703) 378-0100, August 2014

Office Locations
Corporate Headquarters: 207 Maple Avenue East, Vienna, VA 22180, Phone: (703) 334-0060, Fax: (703) 334-0061
Northern Virginia: 207 Maple Avenue East, Vienna, VA 22180, Phone: (703) 334-0060, Fax: (703) 334-0061
Richmond: 2000 Bremo Road, Suite 100, Richmond, VA 23226, Phone: (804) 288-8300, Fax: (804) 288-8301
Fredericksburg: 1000 Jackson Street, Suite 100, Fredericksburg, VA 22401, Phone: (540) 373-8300, Fax: (540) 373-8310
Rinker Design Associates, P.C.
Civil Engineering • Surveying • Land Planning
Transportation • Environmental
Right of Way Services

BRIAN P. KOMAR
Lic. No. 045169
COMMONWEALTH OF VIRGINIA
PROFESSIONAL ENGINEER
Brian Komar
2020.02.14 11:02:23-05'00'
Rinker Design Assoc., P.C.
Fredericksburg, Virginia
DRAINAGE ENGINEER

JOHN A. GIOMETTI
Lic. No. 032300
COMMONWEALTH OF VIRGINIA
PROFESSIONAL ENGINEER
John A Giometti
2020.02.14 17:07:57-05'00'
Rinker Design Assoc., P.C.
Fredericksburg, Virginia
ROADWAY ENGINEER

REVISED	STATE	STATE ROUTE	STATE PROJECT	SHEET NO.
	VA.	11	U000-138-R04 R201, C501	6A

DESIGN FEATURES RELATING TO CONSTRUCTION OR TO REGULATION AND CONTROL OF TRAFFIC MAY BE SUBJECT TO CHANGE AS DEEMED NECESSARY BY THE DEPARTMENT

PROFILE RTE. 11
STATIONS 29+00 TO 36+00

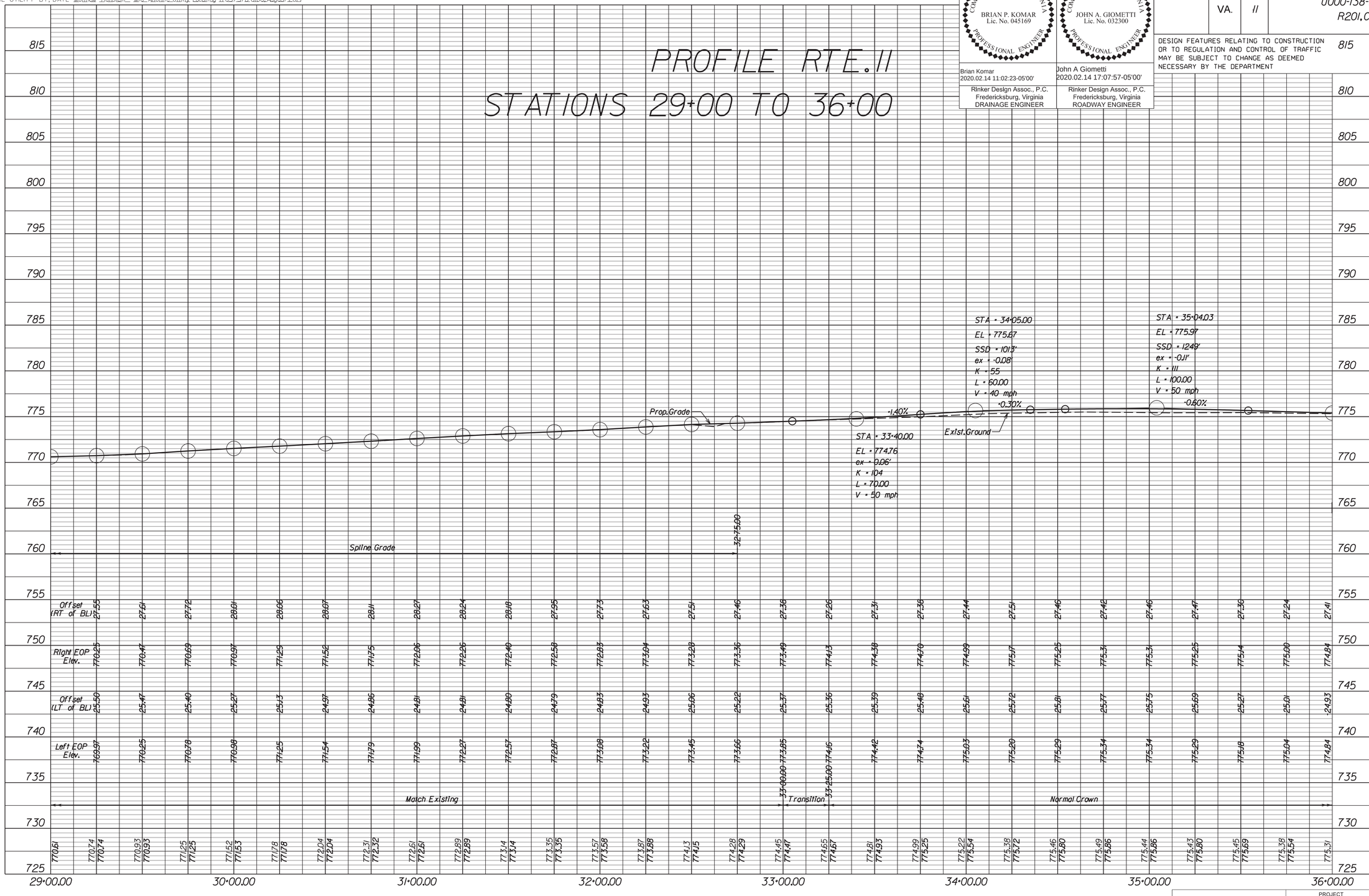

PROJECT	SHEET NO.
U000-138-R04	6A

2/14/2020
9:05:57 AM

d10301 3007.dgn
Plotted By: mbeales

PROJECT MANAGER Perry Eisenach, P.E. - City of Winchester (540) 667-2085
SURVEYED BY, DATE Sidney Thomas, L.S. - Rinker Design Associates (703) 368-7373, October 2014
DESIGN BY John A. Giometti, P.E. - Rinker Design Associates (703) 334-0060
SUBSURFACE UTILITY BY, DATE Matthew Bansiem - Mid Atlantic Utility Locating (703) 378-0100, August 2014

Rinker Design Associates, P.C.
Civil Engineering - Surveying - Land Planning
Transportation - Environmental
Right of Way Services

Office Locations
10605 Judicial Drive, Suite 106, Fairfax, VA 22030
Tel: (703) 334-0060
Fax: (703) 352-0265

401 Mason Street, Suite 100, Winchester, VA 22601
Tel: (540) 667-2085
Fax: (540) 662-0486

REVISED	STATE	STATE ROUTE	STATE PROJECT	SHEET NO.
06-14-2018 01-23-2019 03-01-2019	VA.	11	U000-138-R04 R201, C501	7

DESIGN FEATURES RELATING TO CONSTRUCTION OR TO REGULATION AND CONTROL OF TRAFFIC MAY BE SUBJECT TO CHANGE AS DEEMED NECESSARY BY THE DEPARTMENT

COMMONWEALTH OF VIRGINIA — BRIAN P. KOMAR, Lic. No. 045169 — PROFESSIONAL ENGINEER
Brian Komar
2020.02.14 11:02:02-05'00'
Rinker Design Assoc., P.C.
Fredericksburg, Virginia
DRAINAGE ENGINEER

COMMONWEALTH OF VIRGINIA — JOHN A. GIOMETTI, Lic. No. 032300 — PROFESSIONAL ENGINEER
John A Giometti
2020.02.14 17:07:20-05'00'
Rinker Design Assoc., P.C.
Fredericksburg, Virginia
ROADWAY ENGINEER

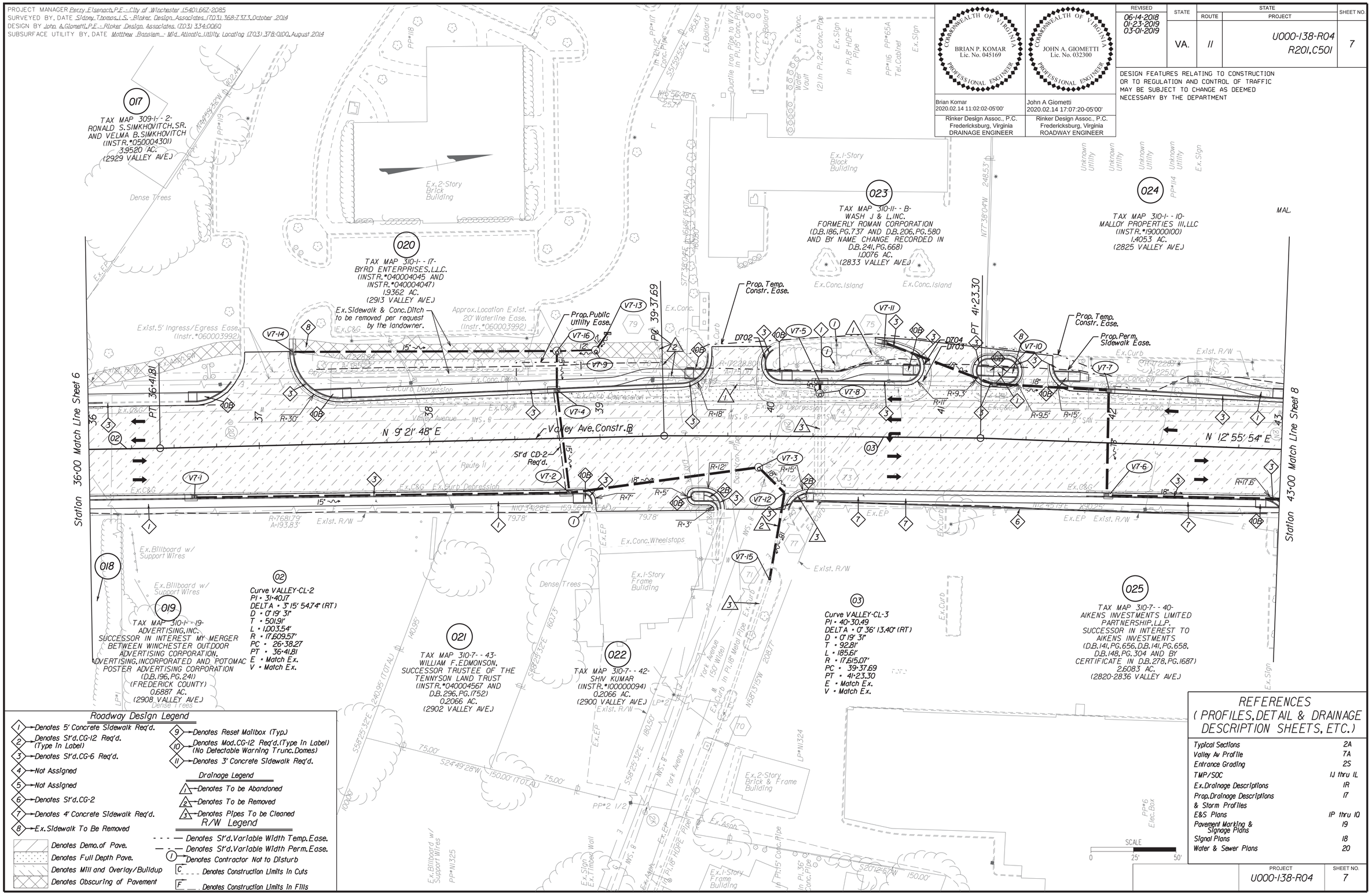

Roadway Design Legend

1. Denotes 5' Concrete Sidewalk Req'd.
2. Denotes St'd. CG-12 Req'd. (Type In Label)
3. Denotes St'd. CG-6 Req'd.
4. Not Assigned
5. Not Assigned
6. Denotes St'd. CG-2
7. Denotes 4' Concrete Sidewalk Req'd.
8. Ex. Sidewalk To Be Removed
9. Denotes Reset Mailbox (Typ.)
10. Denotes Mod. CG-12 Req'd. (Type In Label) (No Detectable Warning Trunc. Domes)
11. Denotes 3' Concrete Sidewalk Req'd.

Denotes Demo. of Pave.
Denotes Full Depth Pave.
Denotes Mill and Overlay/Buildup
Denotes Obscuring of Pavement

Drainage Legend

1. Denotes To be Abandoned
2. Denotes To be Removed
3. Denotes Pipes To be Cleaned

R/W Legend

- - - — Denotes St'd. Variable Width Temp. Ease.
— · — Denotes St'd. Variable Width Perm. Ease.
(1) Denotes Contractor Not to Disturb
C _ _ _ Denotes Construction Limits In Cuts
F _ _ _ Denotes Construction Limits In Fills

REFERENCES (PROFILES, DETAIL & DRAINAGE DESCRIPTION SHEETS, ETC.)

Typical Sections	2A
Valley Av Profile	7A
Entrance Grading	2S
TMP/SOC	1J thru 1L
Ex. Drainage Descriptions	1R
Prop. Drainage Descriptions & Storm Profiles	17
E&S Plans	1P thru 1Q
Pavement Marking & Signage Plans	19
Signal Plans	18
Water & Sewer Plans	20

PROJECT	SHEET NO.
U000-138-R04	7

2/14/2020
9:06:01 AM

d10301300 7a.dgn
Plotted By: mbeales

PROJECT MANAGER Perry Eisenach, P.E. - City of Winchester (540) 667-2085
SURVEYED BY, DATE Sidney Thomas, L.S. - Rinker Design Associates (703) 368-7373, October 2014
DESIGN BY John A. Giometti, P.E. - Rinker Design Associates (703) 334-0060
SUBSURFACE UTILITY BY, DATE Matthew Bansem - Mid Atlantic Utility Locating (703) 378-0100, August 2014

Office Locations
Corporate Headquarters: 207 Maple Avenue East, Suite 100, Vienna, VA 22180, Phone: (703) 334-0060, Fax: (703) 255-0387
Northern Virginia: 207 Maple Avenue East, Suite 100, Vienna, VA 22180, Phone: (703) 334-0060, Fax: (703) 255-0387
Southern Virginia: 1000 Technology Park Drive, Suite 100, Glen Allen, VA 23059, Phone: (804) 346-7911, Fax: (804) 346-8011
Rinker Design Associates, P.C.
Civil Engineering • Surveying • Environmental
Transportation • Environmental • Right of Way Services

BRIAN P. KOMAR
Lic. No. 045169
COMMONWEALTH OF VIRGINIA
PROFESSIONAL ENGINEER
Brian Komar
2020.02.14 11:01:38-05'00'
Rinker Design Assoc., P.C.
Fredericksburg, Virginia
DRAINAGE ENGINEER

JOHN A. GIOMETTI
Lic. No. 032300
COMMONWEALTH OF VIRGINIA
PROFESSIONAL ENGINEER
John A Giometti
2020.02.14 17:06:59-05'00'
Rinker Design Assoc., P.C.
Fredericksburg, Virginia
ROADWAY ENGINEER

REVISED	STATE	STATE ROUTE	STATE PROJECT	SHEET NO.
	VA.	11	U000-138-R04 R201, C501	7A

DESIGN FEATURES RELATING TO CONSTRUCTION OR TO REGULATION AND CONTROL OF TRAFFIC MAY BE SUBJECT TO CHANGE AS DEEMED NECESSARY BY THE DEPARTMENT

PROFILE RTE. 11
STATIONS 36+00 TO 43+00

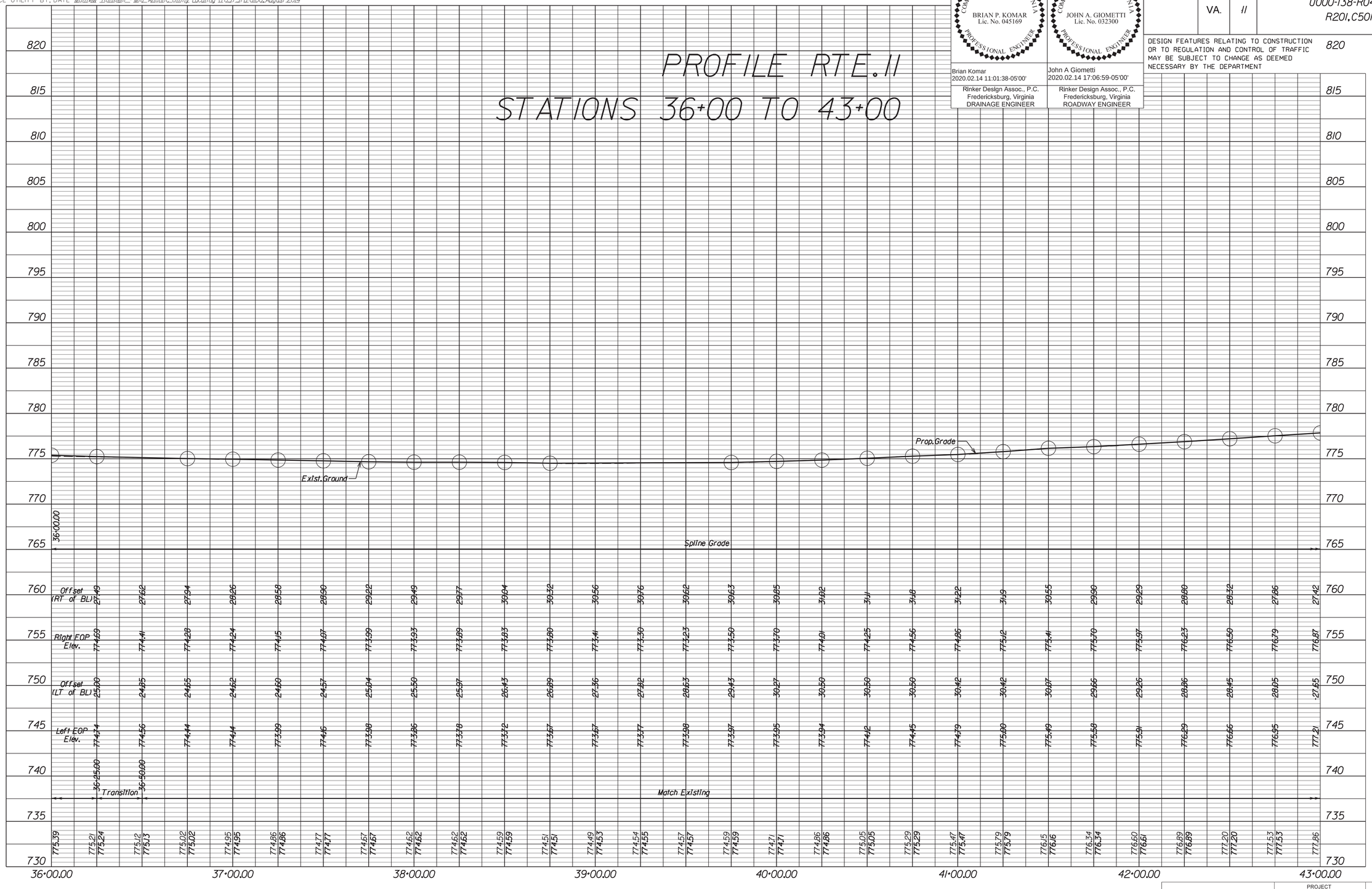

PROJECT	SHEET NO.
U000-138-R04	7A

2/14/2020
9:06:04 AM

d10301300B.dgn
Plotted By: mbeales

PROJECT MANAGER Perry Eisenach, P.E. - City of Winchester (540).667-2085
SURVEYED BY, DATE Sidney Thomas, L.S. - Rinker Design Associates (703).368-7373, October 2014
DESIGN BY John A. Giometti, P.E. - Rinker Design Associates (703).334-0060
SUBSURFACE UTILITY BY, DATE Matthew Banham - Mid Atlantic Utility Locating (703).378-0100, August 2014

Rinker Design Associates, P.C.
Civil Engineering • Surveying • Environmental
Transportation • Land Development • Right of Way Services

Office Locations
Main Office
4101 Fairfax Boulevard
Suite 100
Fairfax, VA 22030
Phone: (703) 334-0060
Fax: (703) 352-0265

Winchester Office
107 Nor'Wester Drive
Suite 101
Winchester, VA 22601
Phone: (540) 667-2085
Fax: (540) 667-2086

Fredericksburg Office
4101 Fairfax Boulevard
Suite 100
Fredericksburg, VA 22407
Phone: (540) 373-8300
Fax: (540) 373-8311

BRIAN P. KOMAR
Lic. No. 045169
COMMONWEALTH OF VIRGINIA
PROFESSIONAL ENGINEER

Brian Komar
2020.02.14 11:01:16-05'00'

Rinker Design Assoc., P.C.
Fredericksburg, Virginia
DRAINAGE ENGINEER

JOHN A. GIOMETTI
Lic. No. 032300
COMMONWEALTH OF VIRGINIA
PROFESSIONAL ENGINEER

John A Giometti
2020.02.14 17:04:31-05'00'

Rinker Design Assoc., P.C.
Fredericksburg, Virginia
ROADWAY ENGINEER

REVISED	STATE	STATE ROUTE	STATE PROJECT	SHEET NO.
01-23-2019	VA.	11	U000-138-R04 R201,C501	8

DESIGN FEATURES RELATING TO CONSTRUCTION OR TO REGULATION AND CONTROL OF TRAFFIC MAY BE SUBJECT TO CHANGE AS DEEMED NECESSARY BY THE DEPARTMENT

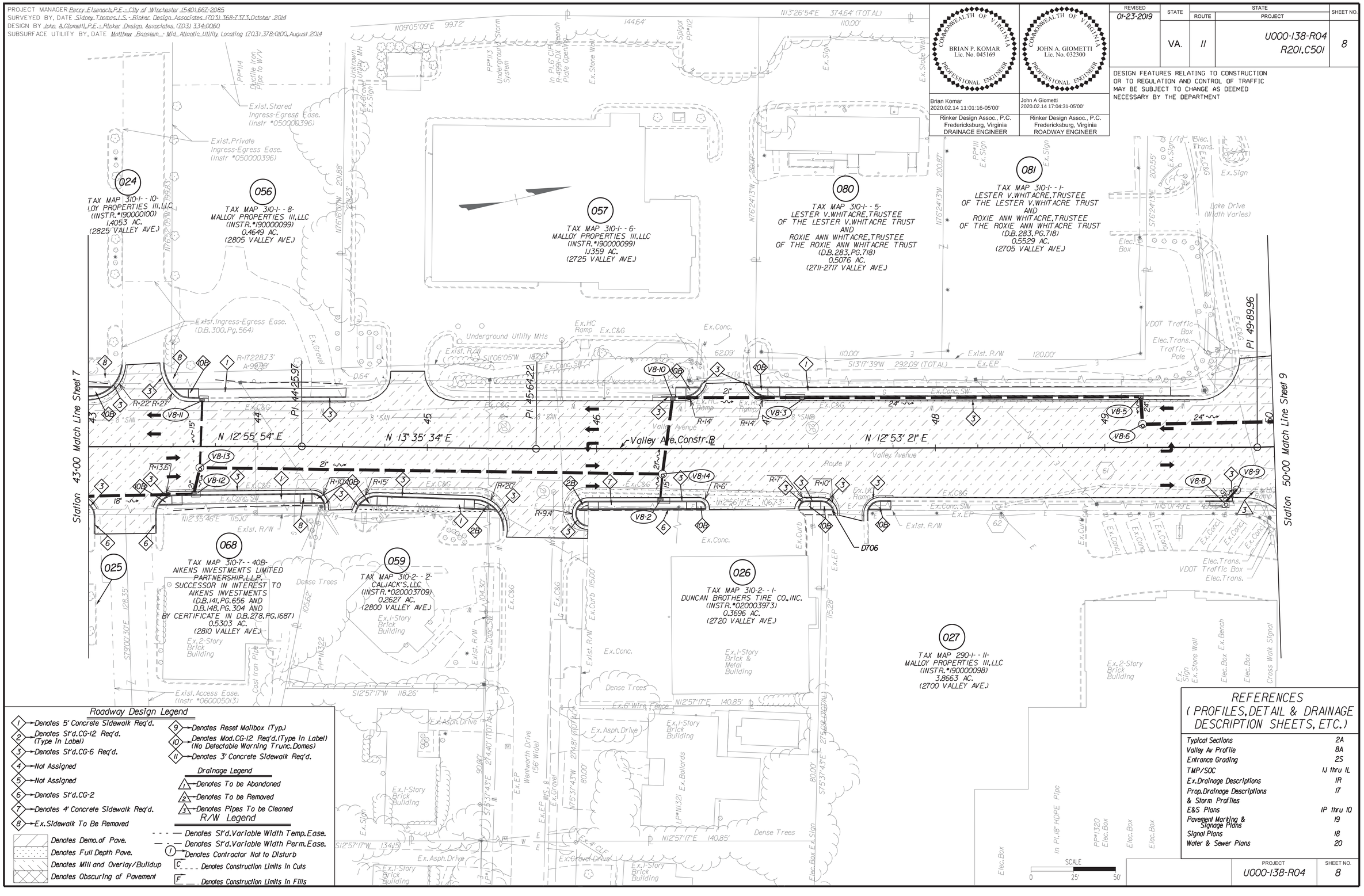

Roadway Design Legend

1 → Denotes 5' Concrete Sidewalk Req'd.
2 → Denotes St'd. CG-12 Req'd. (Type In Label)
3 → Denotes St'd. CG-6 Req'd.
4 → Not Assigned
5 → Not Assigned
6 → Denotes St'd. CG-2
7 → Denotes 4' Concrete Sidewalk Req'd.
8 → Ex. Sidewalk To Be Removed
9 → Denotes Reset Mailbox (Typ.)
10 → Denotes Mod. CG-12 Req'd. (Type In Label) (No Detectable Warning Trunc. Domes)
11 → Denotes 3' Concrete Sidewalk Req'd.

Denotes Demo. of Pave.
Denotes Full Depth Pave.
Denotes Mill and Overlay/Buildup
Denotes Obscuring of Pavement

Drainage Legend

1 → Denotes To be Abandoned
2 → Denotes To be Removed
3 → Denotes Pipes To be Cleaned

R/W Legend

- - - — Denotes St'd. Variable Width Temp. Ease.
— · — Denotes St'd. Variable Width Perm. Ease.
(1) → Denotes Contractor Not to Disturb
C _ _ _ Denotes Construction Limits In Cuts
F _ _ Denotes Construction Limits In Fills

REFERENCES (PROFILES, DETAIL & DRAINAGE DESCRIPTION SHEETS, ETC.)

Typical Sections	2A
Valley Av Profile	8A
Entrance Grading	2S
TMP/SOC	1J thru 1L
Ex. Drainage Descriptions	1R
Prop. Drainage Descriptions & Storm Profiles	1T
E&S Plans	1P thru 1O
Pavement Marking & Signage Plans	1S
Signal Plans	1B
Water & Sewer Plans	2O

PROJECT	SHEET NO.
U000-138-R04	8

2/14/2020
9:06:07 AM

d10301300 8a.dgn
Plotted By: mbeales

PROJECT MANAGER Perry Eisenach, P.E. - City of Winchester (540) 667-2085
SURVEYED BY, DATE Sidney Thomas, L.S. - Rinker Design Associates (703) 368-7373, October 2014
DESIGN BY John A. Giometti, P.E. - Rinker Design Associates (703) 334-0060
SUBSURFACE UTILITY BY, DATE Matthew Bansten - Mid Atlantic Utility Locating (703) 378-0100, August 2014

Rinker Design Associates, P.C.
Civil Engineering - Surveying - Land Planning
Transportation - Environmental
Right of Way Services
www.RDAinc.com

Office Locations
Corporate Headquarters
10455 Fairfax Blvd.
Suite 100
Fairfax, VA 22030
Phone: (703) 352-1300
Fax: (703) 352-0265

Northern Virginia
Suite 100
Leesburg, VA 20175
Phone: (703) 777-7510
Fax: (703) 777-7511

Shenandoah Valley
Suite 101
Winchester, VA 22601
Phone: (540) 667-2085
Fax: (540) 667-2086

BRIAN P. KOMAR
Lic. No. 045169
COMMONWEALTH OF VIRGINIA
PROFESSIONAL ENGINEER
Brian Komar
2020.02.14 11:00:55-05'00'
Rinker Design Assoc., P.C.
Fredericksburg, Virginia
DRAINAGE ENGINEER

JOHN A. GIOMETTI
Lic. No. 032300
COMMONWEALTH OF VIRGINIA
PROFESSIONAL ENGINEER
John A Giometti
2020.02.14 17:04:06-05'00'
Rinker Design Assoc., P.C.
Fredericksburg, Virginia
ROADWAY ENGINEER

REVISED	STATE	STATE ROUTE	STATE PROJECT	SHEET NO.
	VA.	11	U000-138-R04 R201, C501	8A

DESIGN FEATURES RELATING TO CONSTRUCTION OR TO REGULATION AND CONTROL OF TRAFFIC MAY BE SUBJECT TO CHANGE AS DEEMED NECESSARY BY THE DEPARTMENT

PROFILE RTE. 11
STATIONS 43+00 TO 50+00

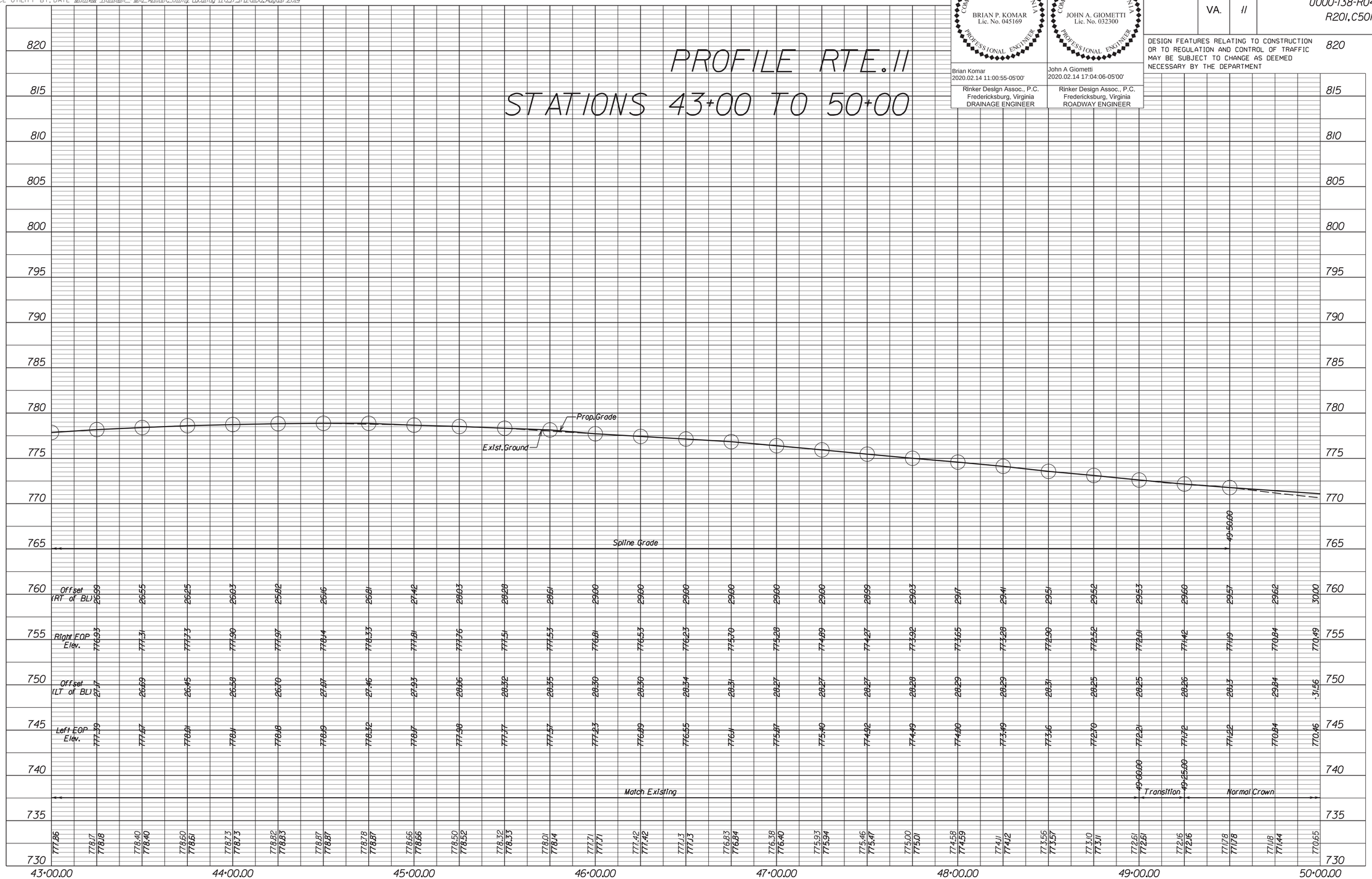

PROJECT	SHEET NO.
U000-138-R04	8A

2/14/2020
9:06:10 AM

d10301 3009.dgn
Plotted By: mbeales

PROJECT MANAGER Perry Eisenach, P.E. - City of Winchester (540) 667-2085
SURVEYED BY, DATE Sidney Thomas, L.S. - Rinker Design Associates (703) 368-7373, October 2014
DESIGN BY John A. Giometti, P.E. - Rinker Design Associates (703) 334-0060
SUBSURFACE UTILITY BY, DATE Matthew Banslem - Mid Atlantic Utility Locating (703) 378-0100, August 2014

Rinker Design Associates, P.C.
Civil Engineering • Surveying • Environmental
Transportation • Land Development • Right of Way Services
SHOW THE WAY WITH RDA, INC.

Office Locations
Headquarters: 4101 Fairfax Boulevard, Suite 100, Fairfax, VA 22030, Phone: (703) 334-0060, Fax: (703) 334-0061
Northern Virginia: 4101 Fairfax Boulevard, Suite 100, Fairfax, VA 22030, Phone: (703) 334-0060, Fax: (703) 334-0061
Richmond: 9211 Forest Hill Avenue, Suite 110, Richmond, VA 23235, Phone: (804) 320-8980, Fax: (804) 320-8981

REVISED	STATE	STATE ROUTE	STATE PROJECT	SHEET NO.
01-23-2019	VA.	11	U000-138-R04 R201,C501	9

DESIGN FEATURES RELATING TO CONSTRUCTION OR TO REGULATION AND CONTROL OF TRAFFIC MAY BE SUBJECT TO CHANGE AS DEEMED NECESSARY BY THE DEPARTMENT

COMMONWEALTH OF VIRGINIA
BRIAN P. KOMAR
Lic. No. 045169
PROFESSIONAL ENGINEER
Brian Komar
2020.02.14 11:00:37-05'00'
Rinker Design Assoc., P.C.
Fredericksburg, Virginia
DRAINAGE ENGINEER

COMMONWEALTH OF VIRGINIA
JOHN A. GIOMETTI
Lic. No. 032300
PROFESSIONAL ENGINEER
John A Giometti
2020.02.14 17:03:48-05'00'
Rinker Design Assoc., P.C.
Fredericksburg, Virginia
ROADWAY ENGINEER

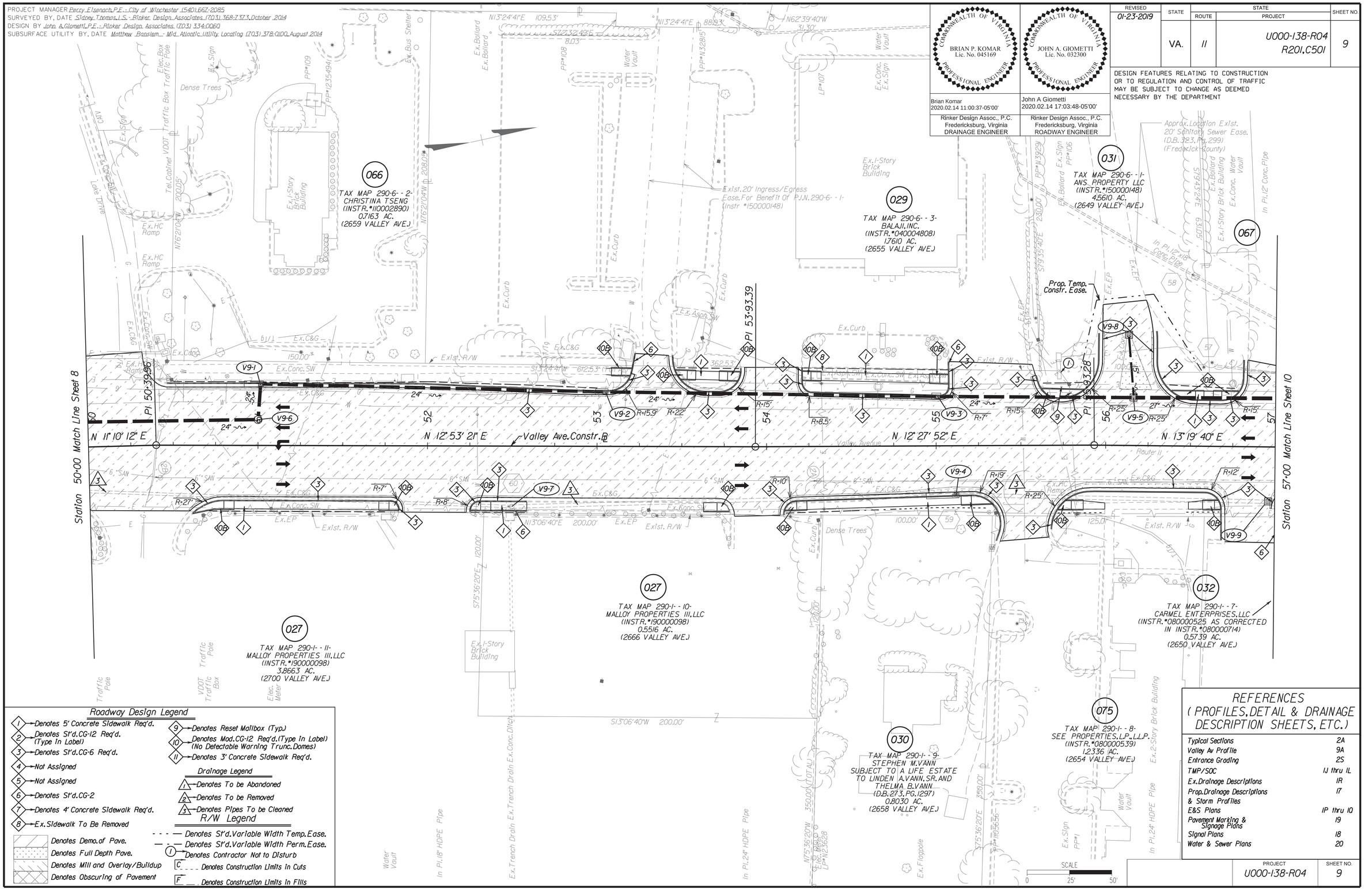

Roadway Design Legend

1. Denotes 5' Concrete Sidewalk Req'd.
2. Denotes St'd. CG-12 Req'd. (Type In Label)
3. Denotes St'd. CG-6 Req'd.
4. Not Assigned
5. Not Assigned
6. Denotes St'd. CG-2
7. Denotes 4' Concrete Sidewalk Req'd.
8. Ex. Sidewalk To Be Removed
9. Denotes Reset Mailbox (Typ.)
10. Denotes Mod. CG-12 Req'd. (Type In Label) (No Detectable Warning Trunc. Domes)
11. Denotes 3' Concrete Sidewalk Req'd.

Denotes Demo. of Pave.
Denotes Full Depth Pave.
Denotes Mill and Overlay/Buildup
Denotes Obscuring of Pavement

Drainage Legend

1. Denotes To be Abandoned
2. Denotes To be Removed
3. Denotes Pipes To be Cleaned

R/W Legend

- - - - Denotes St'd. Variable Width Temp. Ease.
— — — Denotes St'd. Variable Width Perm. Ease.
(1) Denotes Contractor Not to Disturb
C - - - - Denotes Construction Limits In Cuts
F — — Denotes Construction Limits In Fills

REFERENCES (PROFILES, DETAIL & DRAINAGE DESCRIPTION SHEETS, ETC.)

Typical Sections	2A
Valley Av Profile	9A
Entrance Grading	2S
TMP/SOC	1J thru 1L
Ex. Drainage Descriptions	1R
Prop. Drainage Descriptions & Storm Profiles	17
E&S Plans	1P thru 1O
Pavement Marking & Signage Plans	19
Signal Plans	18
Water & Sewer Plans	20

PROJECT	SHEET NO.
U000-138-R04	9

2/14/2020
9:06:13 AM

d10301300 9a.dgn
Plotted By: mbeales

PROJECT MANAGER Perry Eisenach, P.E. - City of Winchester (540) 667-2085
SURVEYED BY, DATE Sidney Thomas, L.S. - Rinker Design Associates (703) 368-7373, October 2014
DESIGN BY John A. Giometti, P.E. - Rinker Design Associates (703) 334-0060
SUBSURFACE UTILITY BY, DATE Matthew Bansiem - Mid Atlantic Utility Locating (703) 378-0100, August 2014

Rinker Design Associates, P.C.
Civil Engineering - Surveying - Land Planning
Transportation - Environmental
Right of Way Services
Office Locations
Fredericksburg, Virginia 22401
Phone: (540) 373-1400
Fax: (540) 373-5447
Norfolk, Virginia 23510
Phone: (757) 625-1400
Fax: (757) 625-1401
4101 Dickens Road
Suite 110
Richmond, VA 23230
Phone: (804) 346-8860
Fax: (804) 346-8861
4417 Mayflower Drive
Suite 101
Fredericksburg, VA 22407
Phone: (540) 373-1400
Fax: (540) 373-5447

BRIAN P. KOMAR
Lic. No. 045169
COMMONWEALTH OF VIRGINIA
PROFESSIONAL ENGINEER
Brian Komar
2020.02.14 11:00:10-05'00'
Rinker Design Assoc., P.C.
Fredericksburg, Virginia
DRAINAGE ENGINEER

JOHN A. GIOMETTI
Lic. No. 032300
COMMONWEALTH OF VIRGINIA
PROFESSIONAL ENGINEER
John A Giometti
2020.02.14 17:03:29-05'00'
Rinker Design Assoc., P.C.
Fredericksburg, Virginia
ROADWAY ENGINEER

REVISED	STATE	STATE ROUTE	STATE PROJECT	SHEET NO.
	VA.	11	U000-138-R04 R201, C501	9A

DESIGN FEATURES RELATING TO CONSTRUCTION OR TO REGULATION AND CONTROL OF TRAFFIC MAY BE SUBJECT TO CHANGE AS DEEMED NECESSARY BY THE DEPARTMENT

PROFILE RTE. 11
STATIONS 50+00 TO 57+00

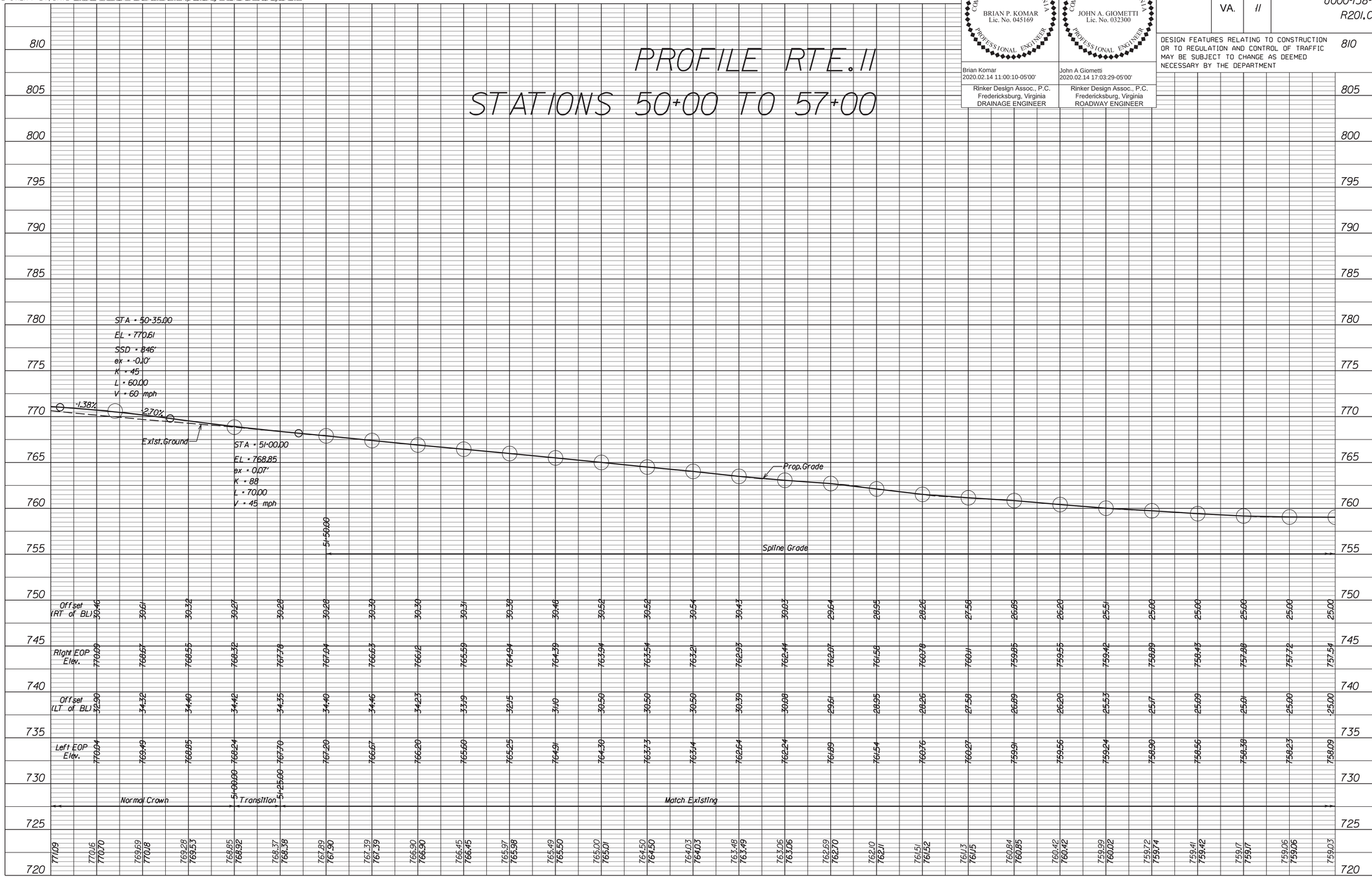

Station	50+00.00	50+50.00	51+00.00	51+25.00	51+50.00	52+00.00	52+50.00	53+00.00	53+50.00	54+00.00	54+50.00	55+00.00	55+50.00	56+00.00	56+50.00	57+00.00
Offset (RT of BL)	30.46	30.28	30.27	30.28	30.28	30.30	30.30	30.31	30.38	30.46	30.52	30.52	30.54	30.43	30.03	29.64
Right EOP Elev.	770.09	768.67	768.55	768.32	767.78	767.04	766.63	766.12	765.59	764.94	764.39	763.94	763.54	763.21	762.93	762.44
Offset (LT of BL)	32.90	34.32	34.40	34.42	34.35	34.40	34.46	34.23	33.95	32.95	31.40	30.50	30.50	30.50	30.39	30.08
Left EOP Elev.	770.04	769.49	768.85	768.24	767.70	767.20	766.67	766.20	765.60	765.25	764.91	764.30	763.73	763.14	762.64	762.24
	771.09	770.16	770.70	769.69	770.18	769.28	769.53	768.85	768.92	768.37	768.38	767.89	767.90	767.39	767.39	766.90

Station	57+50.00	58+00.00	58+50.00	59+00.00	59+50.00	60+00.00	60+50.00	61+00.00	61+50.00	62+00.00	62+50.00	63+00.00	63+50.00	64+00.00	64+50.00	65+00.00
Offset (RT of BL)	28.95	28.26	27.56	26.89	26.20	25.51	25.00	25.00	25.00	25.00	25.00	25.00	25.00	25.00	25.00	25.00
Right EOP Elev.	761.56	760.78	760.11	759.85	759.55	759.42	758.89	758.43	757.88	757.72	757.54					
Offset (LT of BL)	28.95	28.26	27.58	26.89	26.20	25.53	25.17	25.09	25.01	25.00	25.00					
Left EOP Elev.	761.54	760.76	760.27	759.91	759.56	759.24	758.90	758.56	758.38	758.23	758.09					
	762.10	761.51	761.13	760.84	760.42	759.99	759.72	759.41	759.17	759.06	759.03					
	762.11	761.52	761.15	760.85	760.42	760.02	759.74	759.42	759.17	759.06	759.03					

PROJECT	SHEET NO.
U000-138-R04	9A

2/14/2020
9:06:16 AM

d1030130100.dgn
Plotted By: mbeales

PROJECT MANAGER Perry Eisenach, P.E. - City of Winchester (540) 667-2085
SURVEYED BY, DATE Sidney Thomas, L.S. - Rinker Design Associates (703) 368-7373, October 2014
DESIGN BY John A. Giometti, P.E. - Rinker Design Associates (703) 334-0060
SUBSURFACE UTILITY BY, DATE Matthew Bansiem - Mid Atlantic Utility Locating (703) 378-0100, August 2014

Rinker Design Associates, P.C.
Civil Engineering • Surveying • Environmental
Transportation • Land Development • Right-of-Way Services

Office Locations
Main Office: 10211 Fredericksburg Road, Suite 100, Ashland, VA 23005, Phone: (804) 798-9460, Fax: (804) 798-9467
Northern Virginia Office: 4101 Mary Ann Drive, Suite 100, Fairfax, VA 22030, Phone: (703) 334-0060, Fax: (703) 334-0061
Richmond Office: 2001 Maywill Street, Suite 100, Richmond, VA 23230, Phone: (804) 358-0110, Fax: (804) 358-0111

REVISED	STATE	STATE ROUTE	STATE PROJECT	SHEET NO.
06-14-2018	VA.	11	U000-138-R04 R201,C501	10

COMMONWEALTH OF VIRGINIA — BRIAN P. KOMAR, Lic. No. 045169 — PROFESSIONAL ENGINEER
Brian Komar
2020.02.14 10:59:47-05'00'
Rinker Design Assoc., P.C.
Fredericksburg, Virginia
DRAINAGE ENGINEER

COMMONWEALTH OF VIRGINIA — JOHN A. GIOMETTI, Lic. No. 032300 — PROFESSIONAL ENGINEER
John A Giometti
2020.02.14 17:03:10-05'00'
Rinker Design Assoc., P.C.
Fredericksburg, Virginia
ROADWAY ENGINEER

DESIGN FEATURES RELATING TO CONSTRUCTION OR TO REGULATION AND CONTROL OF TRAFFIC MAY BE SUBJECT TO CHANGE AS DEEMED NECESSARY BY THE DEPARTMENT

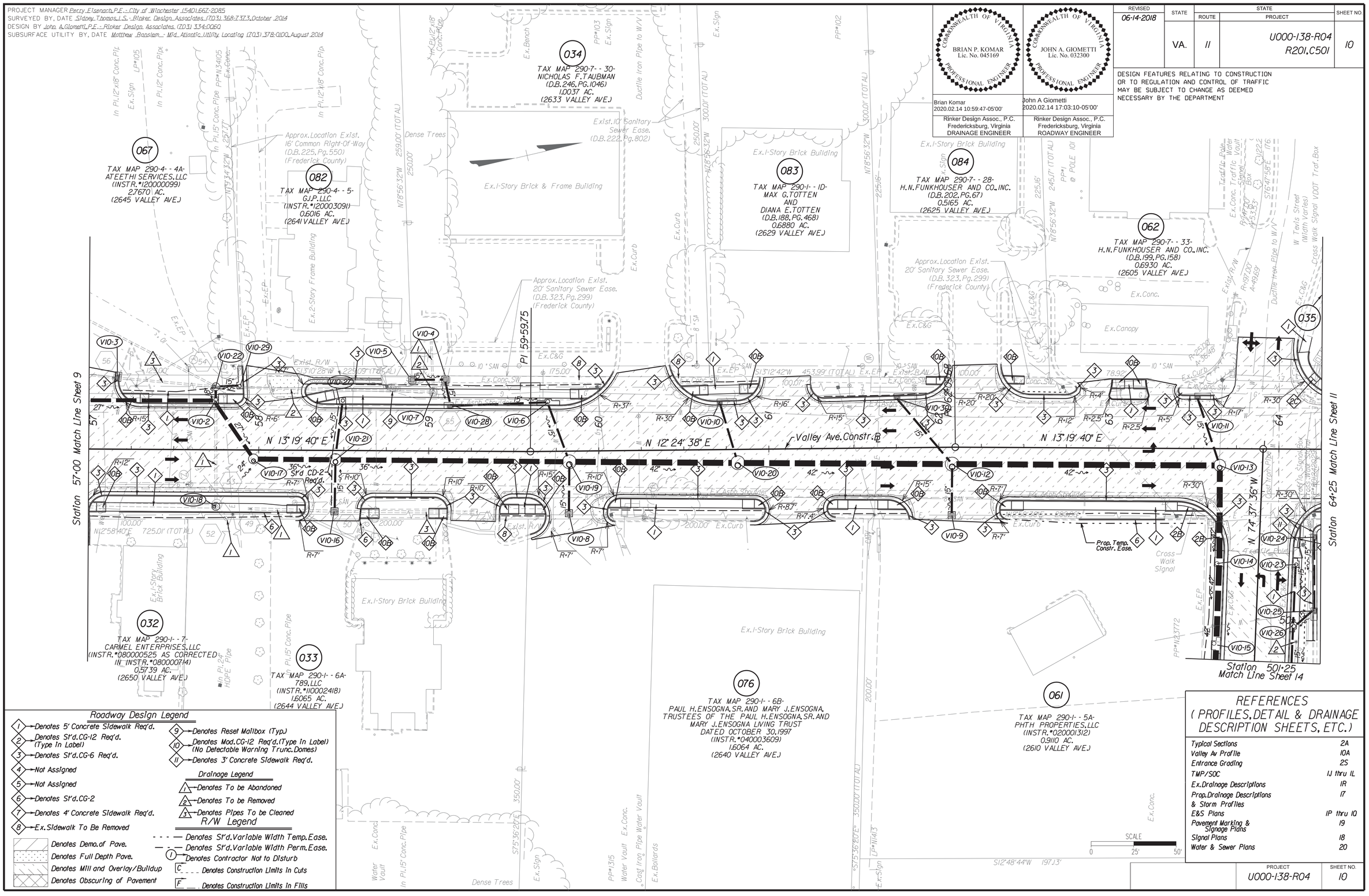

Roadway Design Legend

1. Denotes 5' Concrete Sidewalk Req'd.
2. Denotes St'd. CG-12 Req'd. (Type In Label)
3. Denotes St'd. CG-6 Req'd.
4. Not Assigned
5. Not Assigned
6. Denotes St'd. CG-2
7. Denotes 4' Concrete Sidewalk Req'd.
8. Ex. Sidewalk To Be Removed
9. Denotes Reset Mailbox (Typ.)
10. Denotes Mod. CG-12 Req'd. (Type In Label) (No Detectable Warning Trunc. Domes)
11. Denotes 3' Concrete Sidewalk Req'd.

Denotes Demo. of Pave.
Denotes Full Depth Pave.
Denotes Mill and Overlay/Buildup
Denotes Obscuring of Pavement

Drainage Legend

1. Denotes To be Abandoned
2. Denotes To be Removed
3. Denotes Pipes To be Cleaned

R/W Legend

- - - — Denotes St'd. Variable Width Temp. Ease.
— · — Denotes St'd. Variable Width Perm. Ease.
(1) Denotes Contractor Not to Disturb
C _ _ _ Denotes Construction Limits In Cuts
F __ . Denotes Construction Limits In Fills

REFERENCES (PROFILES, DETAIL & DRAINAGE DESCRIPTION SHEETS, ETC.)

Typical Sections	2A
Valley Av Profile	10A
Entrance Grading	2S
TMP/SOC	1J thru 1L
Ex. Drainage Descriptions	1R
Prop. Drainage Descriptions & Storm Profiles	1T
E&S Plans	1P thru 1O
Pavement Marking & Signage Plans	19
Signal Plans	18
Water & Sewer Plans	20

PROJECT	SHEET NO.
U000-138-R04	10

2/14/2020
9:06:19 AM

d10301301oa.dgn
Plotted By: mbeales

PROJECT MANAGER Perry Eisenach, P.E. - City of Winchester (540) 667-2085
SURVEYED BY, DATE Sidney Thomas, L.S. - Rinker Design Associates (703) 368-7373, October 2014
DESIGN BY John A. Giometti, P.E. - Rinker Design Associates (703) 334-0060
SUBSURFACE UTILITY BY, DATE Matthew Bansten - Mid Atlantic Utility Locating (703) 378-0100, August 2014

Rinker Design Associates, P.C.
Civil Engineering - Surveying - Transportation
Environmental - Emergency Services
Right of Way Services
www.RDAinc.com
Office Locations
Corporate Headquarters
10551 Battleview Parkway
Suite 200
Manassas, VA 20109
Phone: (703) 335-0500
Fax: (703) 335-0501
207 Mapp Lewis Drive
Suite 101
Fredericksburg, VA 22407
Phone: (540) 373-7020
Fax: (540) 373-0411
207 Mapp Lewis Drive
Suite 101
Fredericksburg, VA 22407
Phone: (540) 373-7020
Fax: (540) 373-0411

BRIAN P. KOMAR
Lic. No. 045169
COMMONWEALTH OF VIRGINIA
PROFESSIONAL ENGINEER
Brian Komar
2020.02.14 10:59:28-05'00'
Rinker Design Assoc., P.C.
Fredericksburg, Virginia
DRAINAGE ENGINEER

JOHN A. GIOMETTI
Lic. No. 032300
COMMONWEALTH OF VIRGINIA
PROFESSIONAL ENGINEER
John A Giometti
2020.02.14 17:02:47-05'00'
Rinker Design Assoc., P.C.
Fredericksburg, Virginia
ROADWAY ENGINEER

REVISED	STATE	STATE ROUTE	STATE PROJECT	SHEET NO.
	VA.	11	U000-138-R04 R201, C501	10A

DESIGN FEATURES RELATING TO CONSTRUCTION OR TO REGULATION AND CONTROL OF TRAFFIC MAY BE SUBJECT TO CHANGE AS DEEMED NECESSARY BY THE DEPARTMENT

PROFILE RTE. 11
STATIONS 57+00 TO 64+00

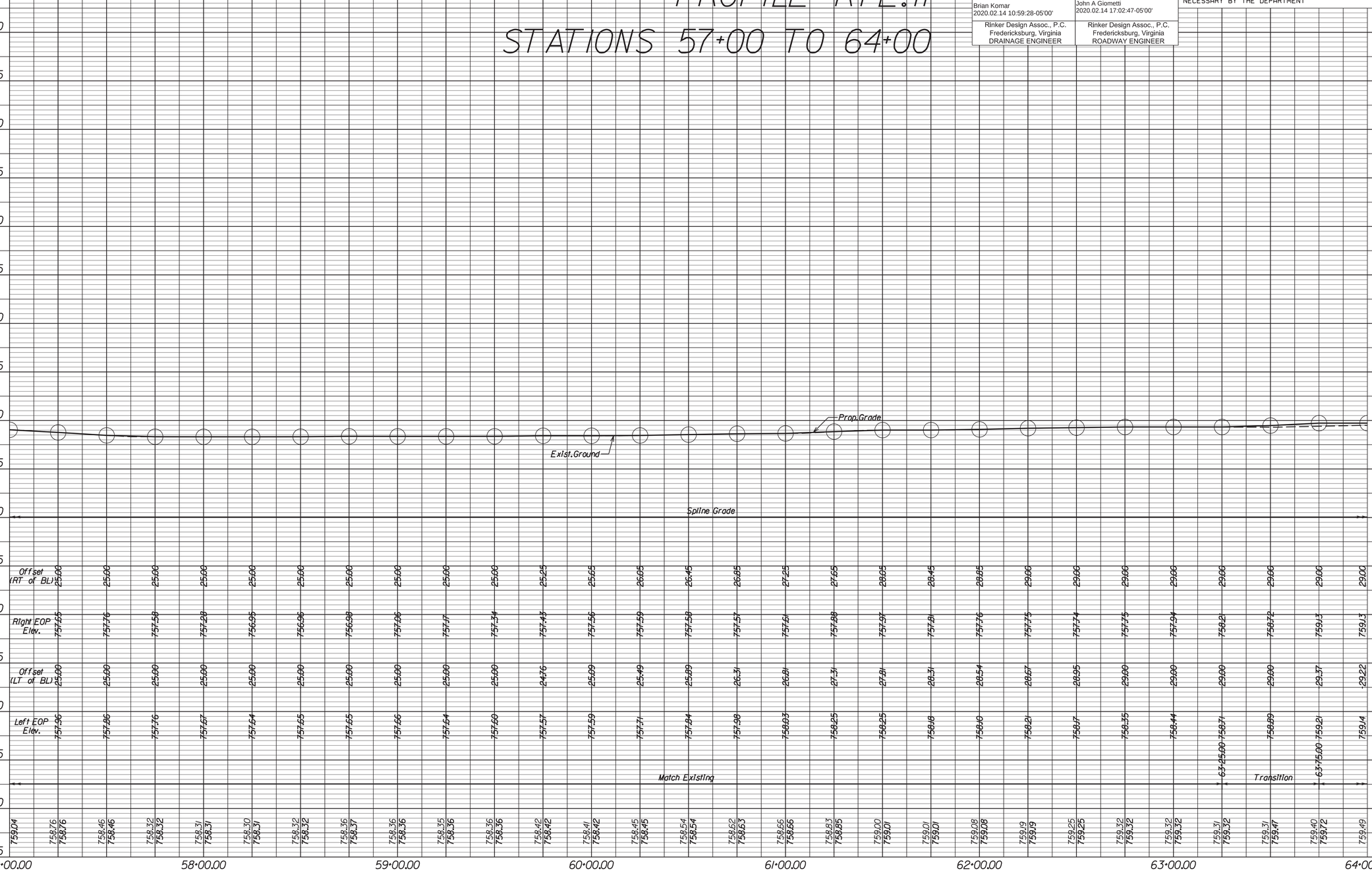

Station	57+00.00	58+00.00	59+00.00	60+00.00	61+00.00	62+00.00	63+00.00	64+00.00
Offset (RT of BL)	25.00	25.00	25.00	25.00	25.00	25.00	25.00	29.00
Right EOP Elev.	757.55	757.76	757.58	757.28	756.95	756.96	756.98	757.06
Offset (LT of BL)	25.00	25.00	25.00	25.00	25.00	25.00	25.00	25.00
Left EOP Elev.	757.96	757.86	757.76	757.67	757.64	757.65	757.65	757.66
	759.04	758.76	758.46	758.32	758.31	758.30	758.32	758.36

PROJECT	SHEET NO.
U000-138-R04	10A

2/14/2020
9:06:23 AM

d10301301ii.dgn
Plotted By: mbeales

PROJECT MANAGER Perry Eisenach, P.E. - City of Winchester (540) 667-2085
SURVEYED BY, DATE Sidney Thomas, L.S. - Rinker Design Associates (703) 368-7373, October 2014
DESIGN BY John A. Giometti, P.E. - Rinker Design Associates (703) 334-0060
SUBSURFACE UTILITY BY, DATE Matthew Bansiem - Mid Atlantic Utility Locating (703) 378-0100, August 2014

Rinker Design Associates, P.C.
Civil Engineering • Surveying • Environmental
Transportation • Land Development
Right of Way Services

Office Locations
Main Office: 10437 Innovation Drive, Suite 190, Manassas, VA 20110, Phone: (703) 334-0060, Fax: (703) 335-0317
Winchester: 107 N. Kent Street, Suite 101, Winchester, VA 22601, Phone: (540) 667-2085, Fax: (540) 665-0193
Fredericksburg: 2651 Fall Hill Avenue, Suite 3, Fredericksburg, VA 22401, Phone: (540) 373-8860, Fax: (540) 373-8693

REVISED	STATE	STATE ROUTE	STATE PROJECT	SHEET NO.
08-20-2018	VA.	11	U000-138-R04 R201,C501	11

COMMONWEALTH OF VIRGINIA — BRIAN P. KOMAR, Lic. No. 045169 — PROFESSIONAL ENGINEER
Brian Komar
2020.02.14 10:59:06-05'00'
Rinker Design Assoc., P.C.
Fredericksburg, Virginia
DRAINAGE ENGINEER

COMMONWEALTH OF VIRGINIA — JOHN A. GIOMETTI, Lic. No. 032300 — PROFESSIONAL ENGINEER
John A Giometti
2020.02.14 17:02:28-05'00'
Rinker Design Assoc., P.C.
Fredericksburg, Virginia
ROADWAY ENGINEER

DESIGN FEATURES RELATING TO CONSTRUCTION OR TO REGULATION AND CONTROL OF TRAFFIC MAY BE SUBJECT TO CHANGE AS DEEMED NECESSARY BY THE DEPARTMENT

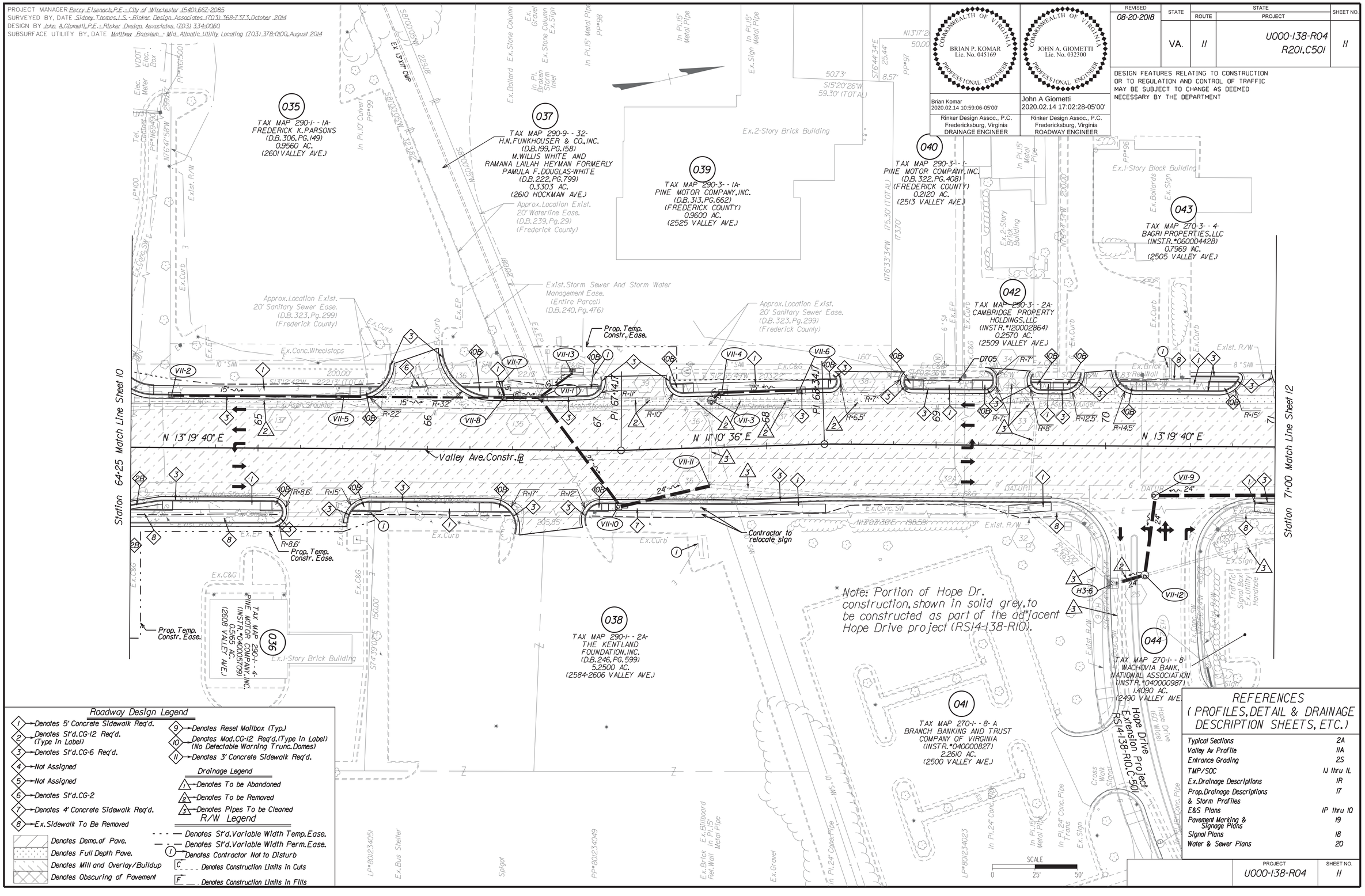

Roadway Design Legend

1 → Denotes 5' Concrete Sidewalk Req'd.
2 → Denotes St'd. CG-12 Req'd. (Type In Label)
3 → Denotes St'd. CG-6 Req'd.
4 → Not Assigned
5 → Not Assigned
6 → Denotes St'd. CG-2
7 → Denotes 4' Concrete Sidewalk Req'd.
8 → Ex. Sidewalk To Be Removed
9 → Denotes Reset Mailbox (Typ.)
10 → Denotes Mod. CG-12 Req'd. (Type In Label) (No Detectable Warning Trunc. Domes)
11 → Denotes 3' Concrete Sidewalk Req'd.

Denotes Demo. of Pave.
Denotes Full Depth Pave.
Denotes Mill and Overlay/Buildup
Denotes Obscuring of Pavement

Drainage Legend

1 → Denotes To be Abandoned
2 → Denotes To be Removed
3 → Denotes Pipes To be Cleaned

R/W Legend

Denotes St'd. Variable Width Temp. Ease.
Denotes St'd. Variable Width Perm. Ease.
1 → Denotes Contractor Not to Disturb
C Denotes Construction Limits In Cuts
F Denotes Construction Limits In Fills

REFERENCES (PROFILES, DETAIL & DRAINAGE DESCRIPTION SHEETS, ETC.)

Typical Sections	2A
Valley Av Profile	11A
Entrance Grading	2S
TMP/SOC	1J thru 1L
Ex. Drainage Descriptions	1R
Prop. Drainage Descriptions & Storm Profiles	17
E&S Plans	1P thru 10
Pavement Marking & Signage Plans	19
Signal Plans	18
Water & Sewer Plans	20

PROJECT	SHEET NO.
U000-138-R04	11

2/14/2020
9:06:26 AM

d10301301lad.gn
Plotted By: mbeales

PROJECT MANAGER Perry Eisenach, P.E. - City of Winchester (540) 667-2085
SURVEYED BY, DATE Sidney Thomas, L.S. - Rinker Design Associates (703) 368-7373, October 2014
DESIGN BY John A. Giometti, P.E. - Rinker Design Associates, (703) 334-0060
SUBSURFACE UTILITY BY, DATE Matthew Bansem - Mid Atlantic Utility Locating (703) 378-0100, August 2014

Office Locations
Rinker Design Associates, P.C.
Civil Engineering • Surveying • Environmental
Transportation • Environmental • Right of Way Services
Corporate Headquarters: 401 Mapp Drive, Winchester, VA 22601
Phone: (540) 667-2085 Fax: (540) 667-2110
Northern Virginia: 4651 Daly Drive, Suite 100, Chantilly, VA 20151
Phone: (703) 378-0100 Fax: (703) 378-0111
Richmond: 4914 Fitzhugh Avenue, Suite 100, Richmond, VA 23230
Phone: (804) 355-1460 Fax: (804) 355-1464

COMMONWEALTH OF VIRGINIA
BRIAN P. KOMAR
Lic. No. 045169
PROFESSIONAL ENGINEER
Brian Komar
2020.02.14 11:10:48-05'00'
Rinker Design Assoc., P.C.
Fredericksburg, Virginia
DRAINAGE ENGINEER

COMMONWEALTH OF VIRGINIA
JOHN A. GIOMETTI
Lic. No. 032300
PROFESSIONAL ENGINEER
John A Giometti
2020.02.14 17:02:02-05'00'
Rinker Design Assoc., P.C.
Fredericksburg, Virginia
ROADWAY ENGINEER

REVISED	STATE	ROUTE	PROJECT	SHEET NO.
	VA.	11	U000-138-R04 R201, C501	11A

DESIGN FEATURES RELATING TO CONSTRUCTION OR TO REGULATION AND CONTROL OF TRAFFIC MAY BE SUBJECT TO CHANGE AS DEEMED NECESSARY BY THE DEPARTMENT

PROFILE RTE. 11
STATIONS 64+00 TO 71+00

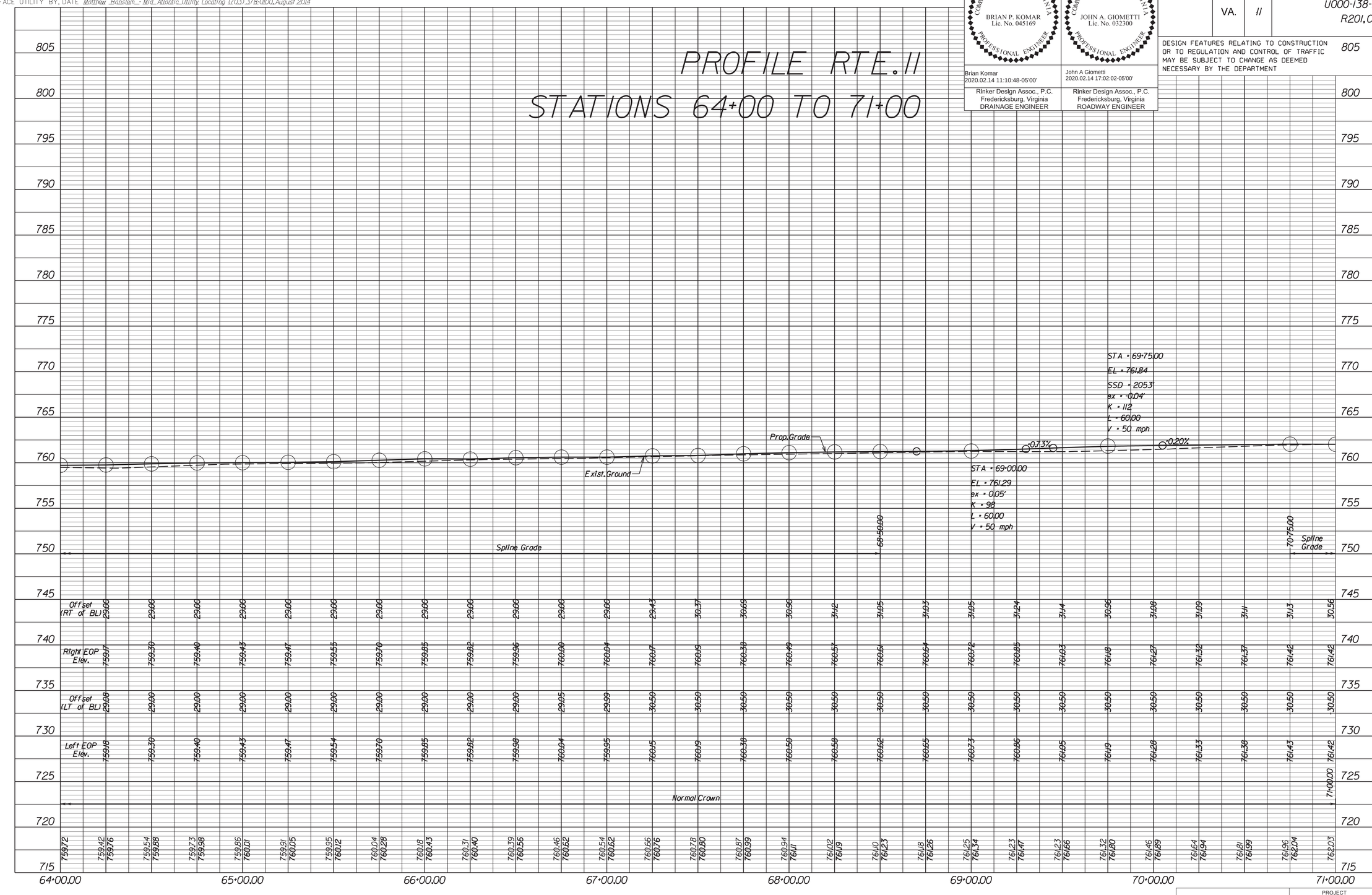

PROJECT	SHEET NO.
U000-138-R04	11A

3/3/2020
2:46:16 PM

d10301301 2.dgn
Plotted By: mbeales

PROJECT MANAGER Perry Eisenach, P.E. - City of Winchester (540) 667-2085
SURVEYED BY, DATE Sidney Thomas, L.S. - Rinker Design Associates (703) 368-7373, October 2014
DESIGN BY John A. Giometti, P.E. - Rinker Design Associates (703) 334-0060
SUBSURFACE UTILITY BY, DATE Matthew Bansleben - Mid Atlantic Utility Locating (703) 378-0100, August 2014

Rinker Design Associates, P.C.
Civil Engineering • Surveying • Environmental Transportation • Land Planning • Right of Way Services

Office Locations
Main Office: 10521 Judicial Drive, Suite 106, Fairfax, VA 22030, Phone: (703) 334-0060, Fax: (703) 352-0227
Winchester Office: 107 N. Kent Street, Suite 101, Winchester, VA 22601, Phone: (540) 667-2085, Fax: (540) 667-0222
Fredericksburg Office: 2001 Princess Anne Street, Suite 101, Fredericksburg, VA 22401, Phone: (540) 373-4650, Fax: (540) 373-0221

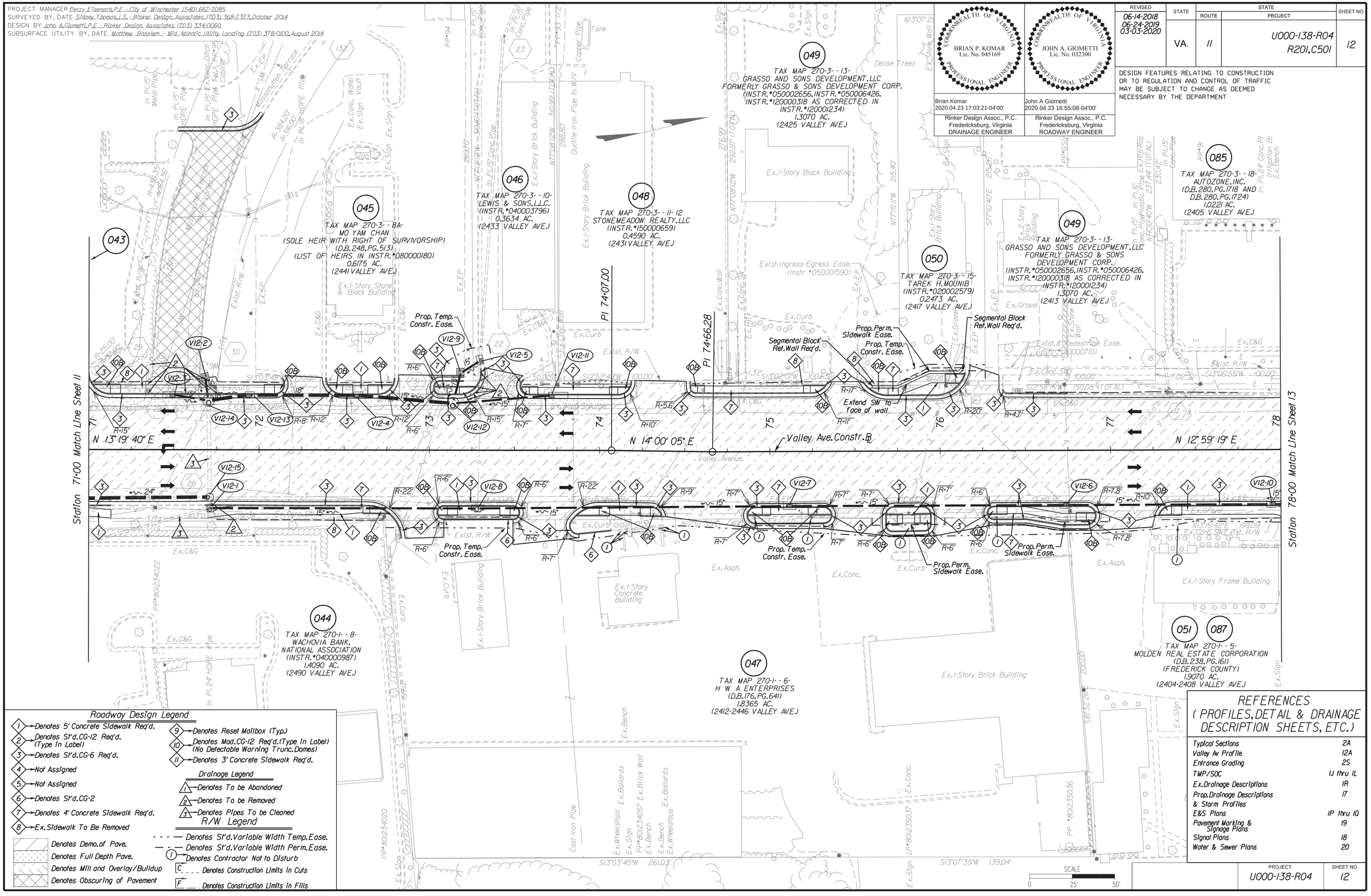

Roadway Design Legend

1. Denotes 5' Concrete Sidewalk Req'd.
2. Denotes St'd. CG-12 Req'd. (Type In Label)
3. Denotes St'd. CG-6 Req'd.
4. Not Assigned
5. Not Assigned
6. Denotes St'd. CG-2
7. Denotes 4' Concrete Sidewalk Req'd.
8. Ex. Sidewalk To Be Removed
9. Denotes Reset Mailbox (Typ.)
10. Denotes Mod. CG-12 Req'd. (Type In Label) (No Detectable Warning Trunc. Domes)
11. Denotes 3' Concrete Sidewalk Req'd.

Denotes Demo. of Pave.
Denotes Full Depth Pave.
Denotes Mill and Overlay/Buildup
Denotes Obscuring of Pavement

Drainage Legend

1. Denotes To be Abandoned
2. Denotes To be Removed
3. Denotes Pipes To be Cleaned

R/W Legend

- - - — Denotes St'd. Variable Width Temp. Ease.
— · — Denotes St'd. Variable Width Perm. Ease.
(1) Denotes Contractor Not to Disturb
C _ _ _ Denotes Construction Limits In Cuts
F _ _ _ Denotes Construction Limits In Fills

COMMONWEALTH OF VIRGINIA
BRIAN P. KOMAR
Lic. No. 045169
PROFESSIONAL ENGINEER

Brian Komar
2020.04.23 17:03:21-04'00'
Rinker Design Assoc., P.C.
Fredericksburg, Virginia
DRAINAGE ENGINEER

COMMONWEALTH OF VIRGINIA
JOHN A. GIOMETTI
Lic. No. 032300
PROFESSIONAL ENGINEER

John A Giometti
2020.04.23 16:55:08-04'00'
Rinker Design Assoc., P.C.
Fredericksburg, Virginia
ROADWAY ENGINEER

REVISED	STATE	STATE ROUTE	STATE PROJECT	SHEET NO.
06-14-2018 06-24-2019 03-03-2020	VA.	11	U000-138-R04 R201, C501	12

DESIGN FEATURES RELATING TO CONSTRUCTION OR TO REGULATION AND CONTROL OF TRAFFIC MAY BE SUBJECT TO CHANGE AS DEEMED NECESSARY BY THE DEPARTMENT

REFERENCES (PROFILES, DETAIL & DRAINAGE DESCRIPTION SHEETS, ETC.)

Typical Sections	2A
Valley Av Profile	12A
Entrance Grading	2S
TMP/SOC	1J thru 1L
Ex. Drainage Descriptions	1R
Prop. Drainage Descriptions & Storm Profiles	17
E&S Plans	1P thru 1Q
Pavement Marking & Signage Plans	19
Signal Plans	18
Water & Sewer Plans	20

PROJECT	SHEET NO.
U000-138-R04	12

2/14/2020
9:06:33 AM

d10301301 2a.dgn
Plotted By: mbeales

PROJECT MANAGER Perry Eisenach, P.E. - City of Winchester (540) 667-2085
SURVEYED BY, DATE Sidney Thomas, L.S. - Rinker Design Associates (703) 368-7373, October 2014
DESIGN BY John A. Giometti, P.E. - Rinker Design Associates (703) 334-0060
SUBSURFACE UTILITY BY, DATE Matthew Ransiem - Mid Atlantic Utility Locating (703) 378-0100, August 2014

Office Locations
Rinker Design Associates, P.C.
Civil Engineering • Surveying • Environmental
Transportation • Transmission • Right of Way Services
SINCE ESTABLISHED IN MCMLXXVIII
4417 Brookfield Corporate Drive, Suite 100, Chantilly, VA 20151, Phone: (703) 334-0060, Fax: (703) 334-0083
4417 Brookfield Corporate Drive, Suite 100, Chantilly, VA 20151, Phone: (703) 378-0100, Fax: (703) 378-0101
4417 Brookfield Corporate Drive, Suite 100, Chantilly, VA 20151, Phone: (703) 378-0100, Fax: (703) 378-0101

COMMONWEALTH OF VIRGINIA
BRIAN P. KOMAR
Lic. No. 045169
PROFESSIONAL ENGINEER
Brian Komar
2020.02.14 11:10:09-05'00'
Rinker Design Assoc., P.C.
Fredericksburg, Virginia
DRAINAGE ENGINEER

COMMONWEALTH OF VIRGINIA
JOHN A. GIOMETTI
Lic. No. 032300
PROFESSIONAL ENGINEER
John A Giometti
2020.02.14 17:01:26-05'00'
Rinker Design Assoc., P.C.
Fredericksburg, Virginia
ROADWAY ENGINEER

REVISED	STATE	ROUTE	PROJECT	SHEET NO.
06-24-2019	VA.	11	U000-138-R04 R201, C501	12A

DESIGN FEATURES RELATING TO CONSTRUCTION OR TO REGULATION AND CONTROL OF TRAFFIC MAY BE SUBJECT TO CHANGE AS DEEMED NECESSARY BY THE DEPARTMENT

PROFILE RTE. 11
STATIONS 71+00 TO 78+00

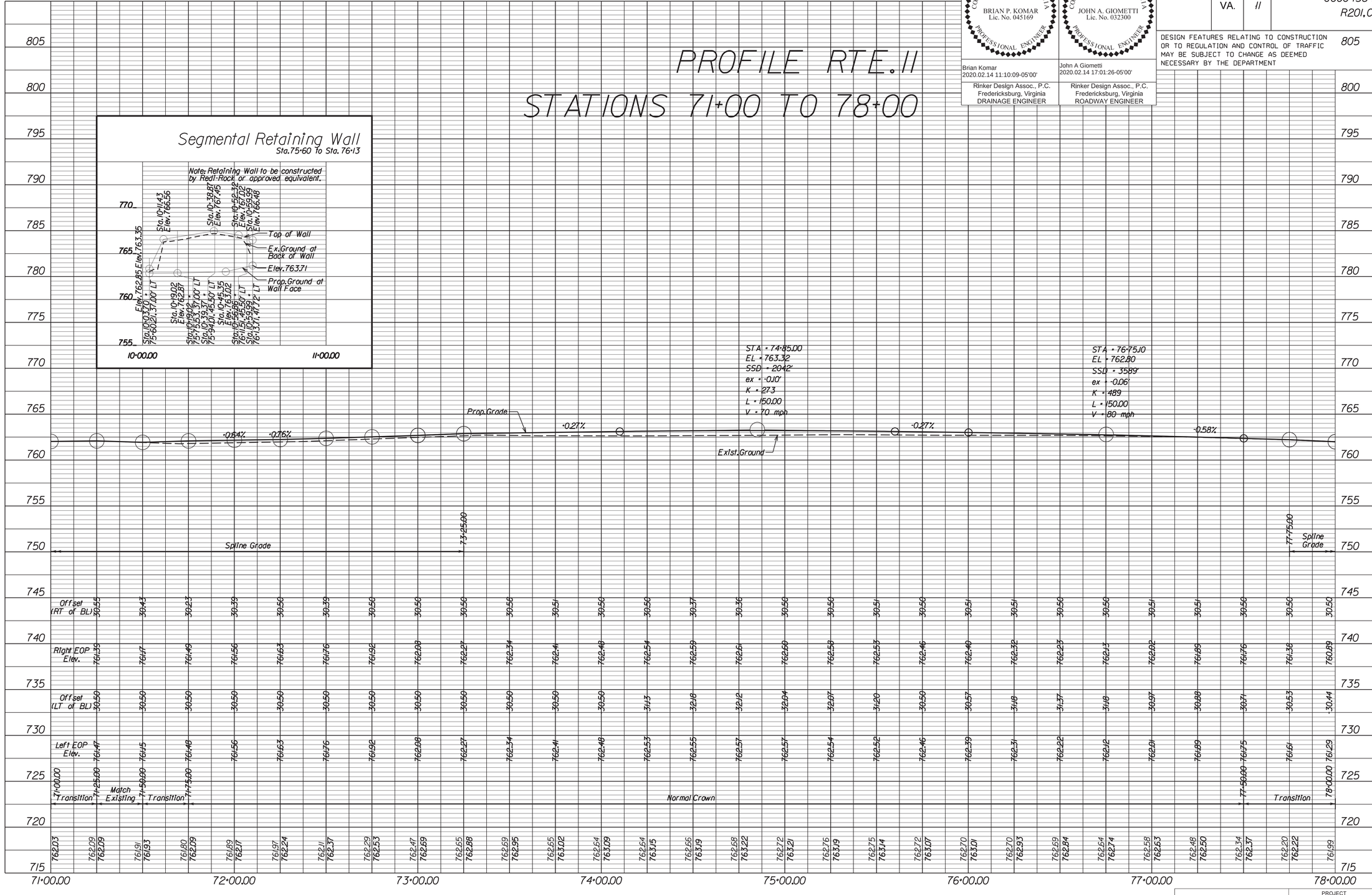

PROJECT	SHEET NO.
U000-138-R04	12A

3/3/2020
2:46:19 PM

d10301301 3.dgn
Plotted By: mbeales

PROJECT MANAGER Perry Eisenach, P.E. - City of Winchester (540) 667-2085
SURVEYED BY, DATE Sidney Thomas, L.S. - Rinker Design Associates (703) 368-7373, October 2014
DESIGN BY John A. Giometti, P.E. - Rinker Design Associates (703) 334-0060
SUBSURFACE UTILITY BY, DATE Matthew Ransiem - Mid Atlantic Utility Locating (703) 378-0100, August 2014

Office Locations
Corporate Headquarters: 4101 Dickerson Road, Suite 100, Baltimore, MD 21213, Phone: (410) 366-3366, Fax: (410) 366-3367
Northern Virginia: 4101 Dickerson Road, Suite 100, Baltimore, MD 21213, Phone: (410) 366-3366, Fax: (410) 366-3367
Southern Virginia: 107 Village Green Drive, Suite 100, Lexington, VA 24450, Phone: (540) 463-5160, Fax: (540) 463-5161

Rinker Design Associates, P.C.
Civil Engineering • Surveying • Environmental Engineering • Right of Way Services

REVISED	STATE	STATE ROUTE	STATE PROJECT	SHEET NO.
06-14-2018 03-03-2020	VA.	11	U000-138-R04 P101, R201, C501	13

COMMONWEALTH OF VIRGINIA — BRIAN P. KOMAR, Lic. No. 045169 — PROFESSIONAL ENGINEER
Brian Komar
2020.04.23 17:03:42-04'00'
Rinker Design Assoc., P.C.
Fredericksburg, Virginia
DRAINAGE ENGINEER

COMMONWEALTH OF VIRGINIA — JOHN A. GIOMETTI, Lic. No. 032300 — PROFESSIONAL ENGINEER
John A Giometti
2020.04.23 16:55:29-04'00'
Rinker Design Assoc., P.C.
Fredericksburg, Virginia
ROADWAY ENGINEER

DESIGN FEATURES RELATING TO CONSTRUCTION OR TO REGULATION AND CONTROL OF TRAFFIC MAY BE SUBJECT TO CHANGE AS DEEMED NECESSARY BY THE DEPARTMENT

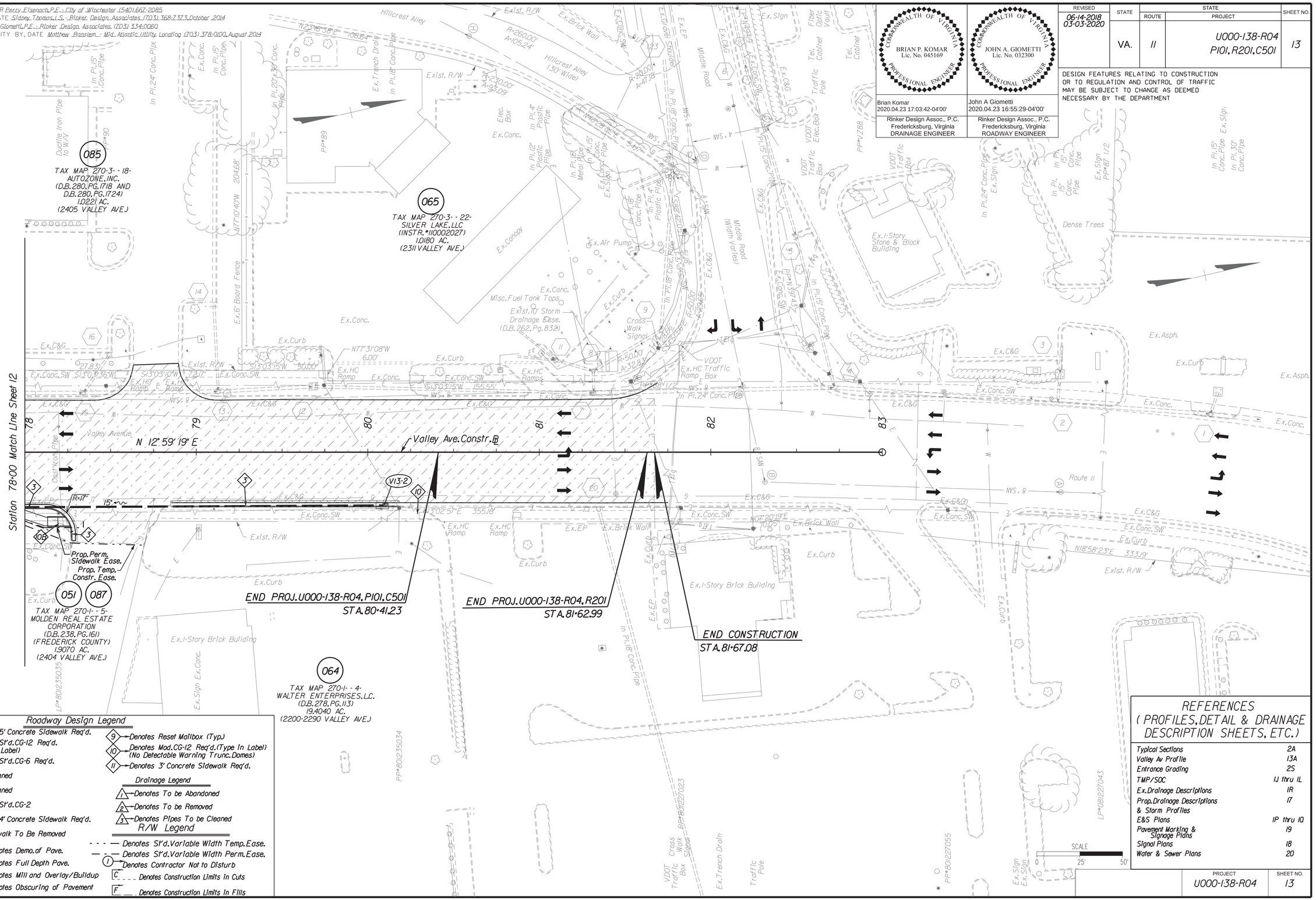

Roadway Design Legend

1. Denotes 5' Concrete Sidewalk Req'd.
2. Denotes St'd. CG-12 Req'd. (Type In Label)
3. Denotes St'd. CG-6 Req'd.
4. Not Assigned
5. Not Assigned
6. Denotes St'd. CG-2
7. Denotes 4' Concrete Sidewalk Req'd.
8. Ex. Sidewalk To Be Removed
9. Denotes Reset Mailbox (Typ.)
10. Denotes Mod. CG-12 Req'd. (Type In Label) (No Detectable Warning Trunc. Domes)
11. Denotes 3' Concrete Sidewalk Req'd.

Denotes Demo. of Pave.
Denotes Full Depth Pave.
Denotes Mill and Overlay/Buildup
Denotes Obscuring of Pavement

Drainage Legend

1. Denotes To be Abandoned
2. Denotes To be Removed
3. Denotes Pipes To be Cleaned

R/W Legend

- - - — Denotes St'd. Variable Width Temp. Ease.
— · · — Denotes St'd. Variable Width Perm. Ease.
(1) Denotes Contractor Not to Disturb
C _ _ _ Denotes Construction Limits In Cuts
F ___ Denotes Construction Limits In Fills

REFERENCES (PROFILES, DETAIL & DRAINAGE DESCRIPTION SHEETS, ETC.)

Typical Sections	2A
Valley Av Profile	13A
Entrance Grading	2S
TMP/SOC	1J thru 1L
Ex. Drainage Descriptions	1R
Prop. Drainage Descriptions & Storm Profiles	17
E&S Plans	1P thru 1Q
Pavement Marking & Signage Plans	19
Signal Plans	18
Water & Sewer Plans	20

PROJECT	SHEET NO.
U000-138-R04	13

2/14/2020
9:06:39 AM

d1030130130a.dgn
Plotted By: mbeales

PROJECT MANAGER Perry Eisenach, P.E. - City of Winchester (540) 667-2085
SURVEYED BY, DATE Sidney Thomas, L.S. - Rinker Design Associates (703) 368-7373, October 2014
DESIGN BY John A. Giometti, P.E. - Rinker Design Associates (703) 334-0060
SUBSURFACE UTILITY BY, DATE Matthew Bansiem - Mid Atlantic Utility Locating (703) 378-0100, August 2014

Office Locations
Rinker Design Associates, P.C.
Civil Engineering - Surveying - Environmental
Transportation - Environmental
Right of Way Services
SMALL BUSINESS
Main Office
107 Mill Ridge Road
Lynchburg, VA 24502
Phone: (434) 525-1860
Fax: (434) 525-1865
Branch Offices
107 Mary Lynn Drive
Suite 101
Blacksburg, VA 24060
Phone: (540) 951-5000
Fax: (540) 951-5001
4101 Dominion Boulevard
Suite 100
Glen Allen, VA 23060
Phone: (804) 262-8001
Fax: (804) 262-8003

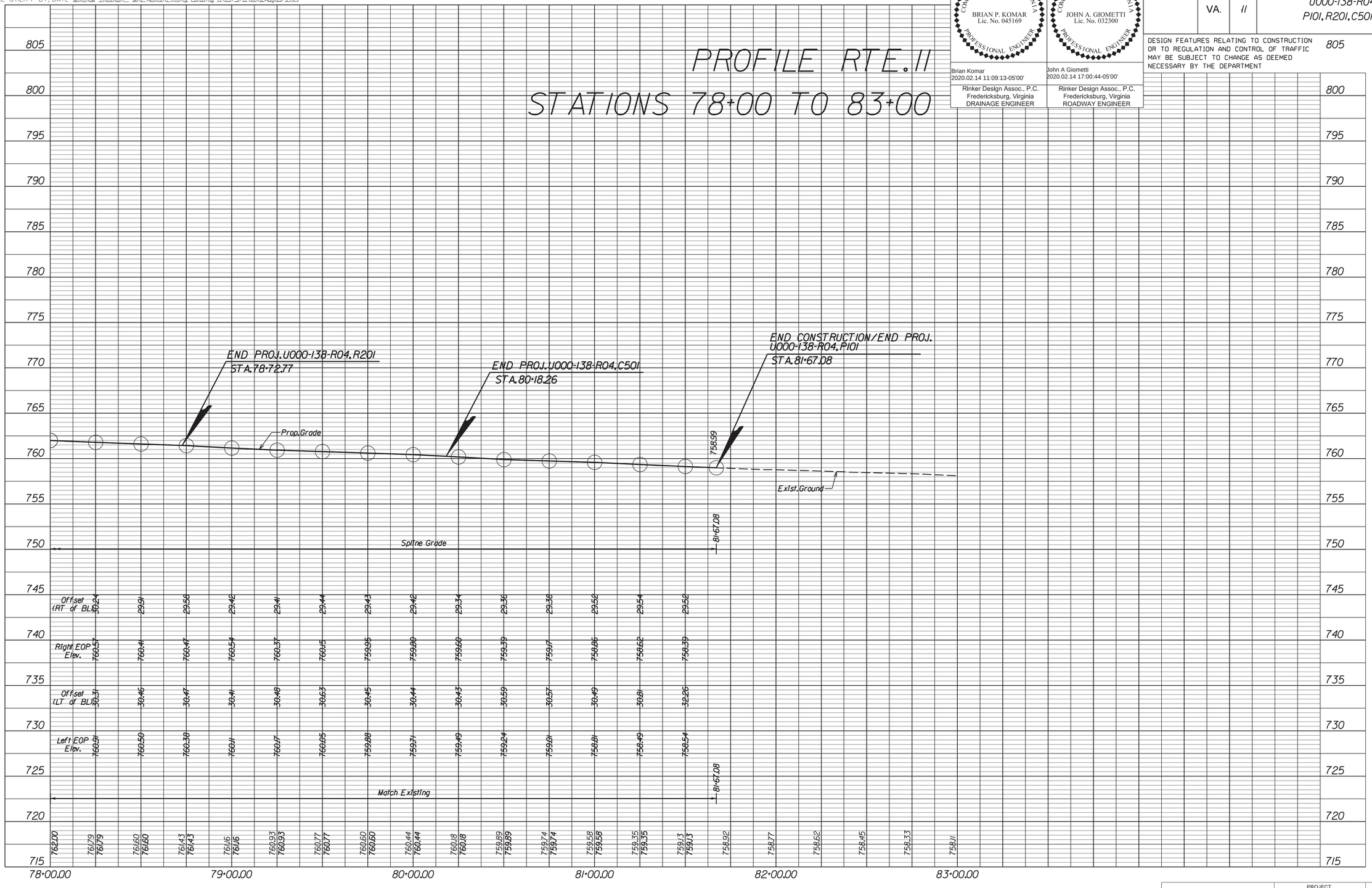

COMMONWEALTH OF VIRGINIA
BRIAN P. KOMAR
Lic. No. 045169
PROFESSIONAL ENGINEER
Brian Komar
2020.02.14 11:09:13-05'00'
Rinker Design Assoc., P.C.
Fredericksburg, Virginia
DRAINAGE ENGINEER

COMMONWEALTH OF VIRGINIA
JOHN A. GIOMETTI
Lic. No. 032300
PROFESSIONAL ENGINEER
John A Giometti
2020.02.14 17:00:44-05'00'
Rinker Design Assoc., P.C.
Fredericksburg, Virginia
ROADWAY ENGINEER

REVISED	STATE	STATE ROUTE	STATE PROJECT	SHEET NO.
	VA.	11	U000-138-R04 P101, R201, C501	13A

DESIGN FEATURES RELATING TO CONSTRUCTION OR TO REGULATION AND CONTROL OF TRAFFIC MAY BE SUBJECT TO CHANGE AS DEEMED NECESSARY BY THE DEPARTMENT

PROJECT	SHEET NO.
U000-138-R04	13A

2/14/2020
9:06:42 AM

d10301301 4.dgn
Plotted By: mbeales

PROJECT MANAGER Perry Eisenach, P.E. - City of Winchester (540) 667-2085
SURVEYED BY, DATE Sidney Thomas, L.S. - Rinker Design Associates (703) 368-7373, October 2014
DESIGN BY John A. Giometti, P.E. - Rinker Design Associates (703) 334-0060
SUBSURFACE UTILITY BY, DATE Matthew Bansiem - Mid Atlantic Utility Locating (703) 378-0100, August 2014

Office Locations
Corporate Headquarters: 8405 Greensboro Drive, Suite 100, McLean, VA 22102, (703) 334-0060
Winchester: 107 Nelson Drive, Suite 101, Winchester, VA 22601, (540) 667-2085
Fredericksburg: 1400 Jefferson Davis Hwy., Suite 100, Fredericksburg, VA 22401, (540) 373-8300
Fax: (540) 373-8301
Rinker Design Associates, P.C.
Civil Engineering • Surveying • Environmental
Transportation • Land Development
Right-of-Way Services

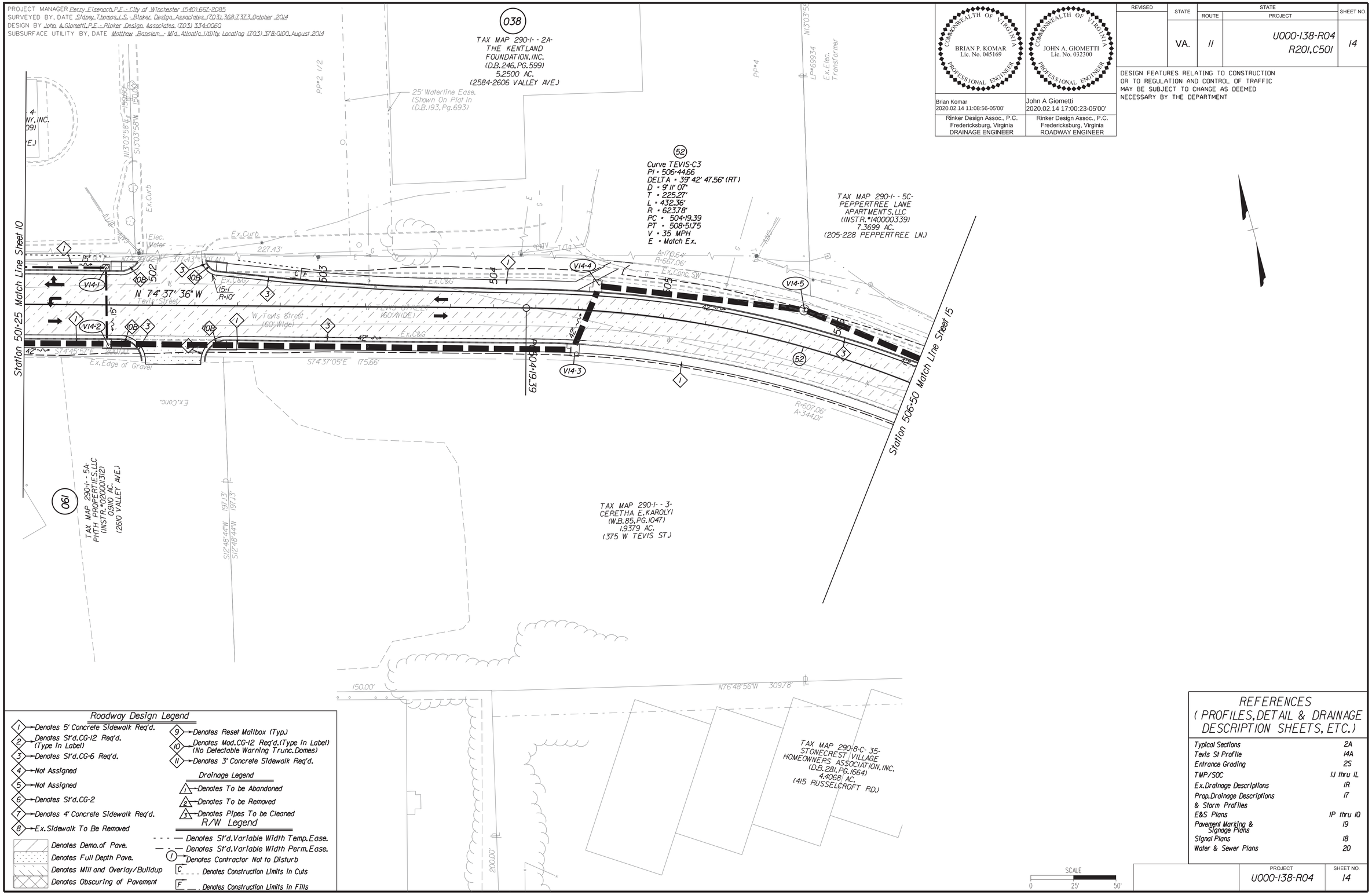

Roadway Design Legend

1. Denotes 5' Concrete Sidewalk Req'd.
2. Denotes St'd. CG-12 Req'd. (Type In Label)
3. Denotes St'd. CG-6 Req'd.
4. Not Assigned
5. Not Assigned
6. Denotes St'd. CG-2
7. Denotes 4' Concrete Sidewalk Req'd.
8. Ex. Sidewalk To Be Removed
9. Denotes Reset Mailbox (Typ.)
10. Denotes Mod. CG-12 Req'd. (Type In Label) (No Detectable Warning Trunc. Domes)
11. Denotes 3' Concrete Sidewalk Req'd.

Denotes Demo. of Pave.
Denotes Full Depth Pave.
Denotes Mill and Overlay/Buildup
Denotes Obscuring of Pavement

Drainage Legend

1. Denotes To be Abandoned
2. Denotes To be Removed
3. Denotes Pipes To be Cleaned

R/W Legend

Denotes St'd. Variable Width Temp. Ease.
Denotes St'd. Variable Width Perm. Ease.
(1) Denotes Contractor Not to Disturb
C Denotes Construction Limits In Cuts
F Denotes Construction Limits In Fills

COMMONWEALTH OF VIRGINIA
BRIAN P. KOMAR
Lic. No. 045169
PROFESSIONAL ENGINEER

Brian Komar
2020.02.14 11:08:56-05'00'
Rinker Design Assoc., P.C.
Fredericksburg, Virginia
DRAINAGE ENGINEER

COMMONWEALTH OF VIRGINIA
JOHN A. GIOMETTI
Lic. No. 032300
PROFESSIONAL ENGINEER

John A Giometti
2020.02.14 17:00:23-05'00'
Rinker Design Assoc., P.C.
Fredericksburg, Virginia
ROADWAY ENGINEER

REVISED	STATE	STATE ROUTE	STATE PROJECT	SHEET NO.
	VA.	11	U000-138-R04 R201, C501	14

DESIGN FEATURES RELATING TO CONSTRUCTION OR TO REGULATION AND CONTROL OF TRAFFIC MAY BE SUBJECT TO CHANGE AS DEEMED NECESSARY BY THE DEPARTMENT

REFERENCES (PROFILES, DETAIL & DRAINAGE DESCRIPTION SHEETS, ETC.)

Typical Sections	2A
Tevis St Profile	14A
Entrance Grading	2S
TMP/SOC	1J thru 1L
Ex. Drainage Descriptions	1R
Prop. Drainage Descriptions & Storm Profiles	17
E&S Plans	1P thru 1Q
Pavement Marking & Signage Plans	19
Signal Plans	18
Water & Sewer Plans	20

PROJECT	SHEET NO.
U000-138-R04	14

2/14/2020
9:06:45 AM

d10301301 4a.dgn
Plotted By: mbeales

PROJECT MANAGER Perry Eisenach, P.E. - City of Winchester (540) 667-2085
SURVEYED BY, DATE Sidney Thomas, L.S. - Rinker Design Associates (703) 368-7373, October 2014
DESIGN BY John A. Giometti, P.E. - Rinker Design Associates, (703) 334-0060
SUBSURFACE UTILITY BY, DATE Matthew Bansiem - Mid Atlantic Utility Locating (703) 378-0100, August 2014

Office Locations
Corporate Headquarters: 4607 Daniels Drive, Suite 100, Chantilly, VA 20151, Phone: (703) 378-0100, Fax: (703) 378-0101
Northern Virginia: 4607 Daniels Drive, Suite 100, Chantilly, VA 20151, Phone: (703) 378-0100, Fax: (703) 378-0101
Richmond: 4607 Daniels Drive, Suite 100, Chantilly, VA 20151, Phone: (703) 378-0100, Fax: (703) 378-0101
Rinker Design Associates, P.C.
Civil Engineering - Surveying - Environmental
Transportation - Land Planning
Right of Way Services

PROFILE TEVIS STREET
STATIONS 500+00 TO 506+50

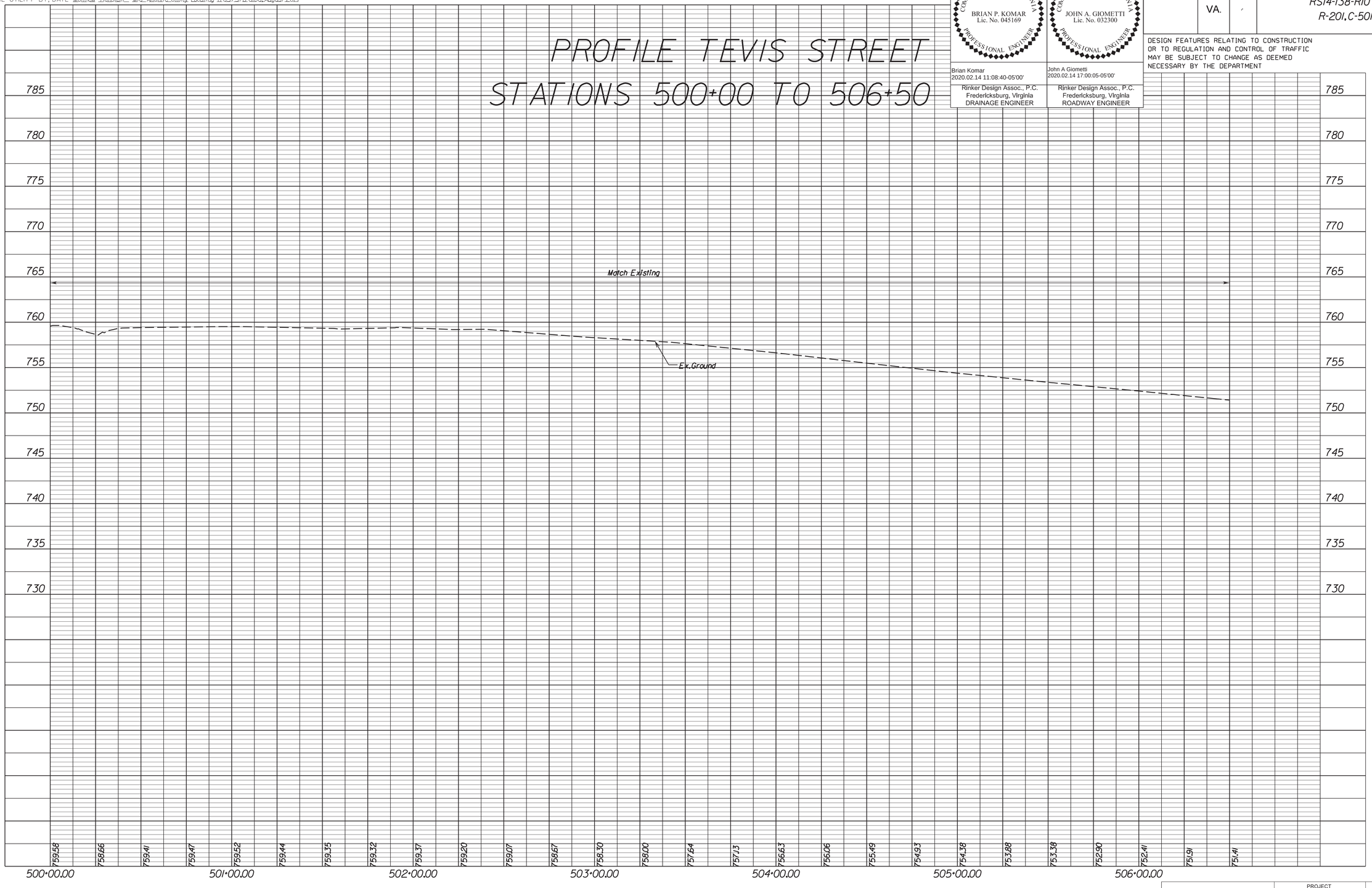

COMMONWEALTH OF VIRGINIA
BRIAN P. KOMAR
Lic. No. 045169
PROFESSIONAL ENGINEER
Brian Komar
2020.02.14 11:08:40-05'00'
Rinker Design Assoc., P.C.
Fredericksburg, Virginia
DRAINAGE ENGINEER

COMMONWEALTH OF VIRGINIA
JOHN A. GIOMETTI
Lic. No. 032300
PROFESSIONAL ENGINEER
John A Giometti
2020.02.14 17:00:05-05'00'
Rinker Design Assoc., P.C.
Fredericksburg, Virginia
ROADWAY ENGINEER

REVISED	STATE	STATE ROUTE	STATE PROJECT	SHEET NO.
	VA.	-	RS14-138-R10 R-201, C-501	14A

DESIGN FEATURES RELATING TO CONSTRUCTION OR TO REGULATION AND CONTROL OF TRAFFIC MAY BE SUBJECT TO CHANGE AS DEEMED NECESSARY BY THE DEPARTMENT

PROJECT	SHEET NO.
RS14-138-R10	14A

PROJECT MANAGER Perry Eisenach, P.E. - City of Winchester (540) 667-2085
SURVEYED BY, DATE Sidney Thomas, L.S. - Rinker Design Associates (703) 368-7373, October 2014
DESIGN BY John A. Giometti, P.E. - Rinker Design Associates (703) 334-0060
SUBSURFACE UTILITY BY, DATE Matthew Bansiem - Mid Atlantic Utility Locating (703) 378-0100, August 2014

Rinker Design Associates, P.C.
Civil Engineering - Surveying - Land Planning
Transportation - Environmental
Right of Way Services

Office Locations
Corporate Headquarters
10432 Balls Ford Road
Suite 300
Manassas, VA 20109
Phone: (703) 334-0060
Fax: (703) 335-0369

4121 Plank Road
Suite 100
Fredericksburg, VA 22407
Phone: (540) 786-8283
Fax: (540) 373-8693

4121 Plank Road
Suite 100
Fredericksburg, VA 22407
Phone: (540) 786-8283
Fax: (540) 373-8693

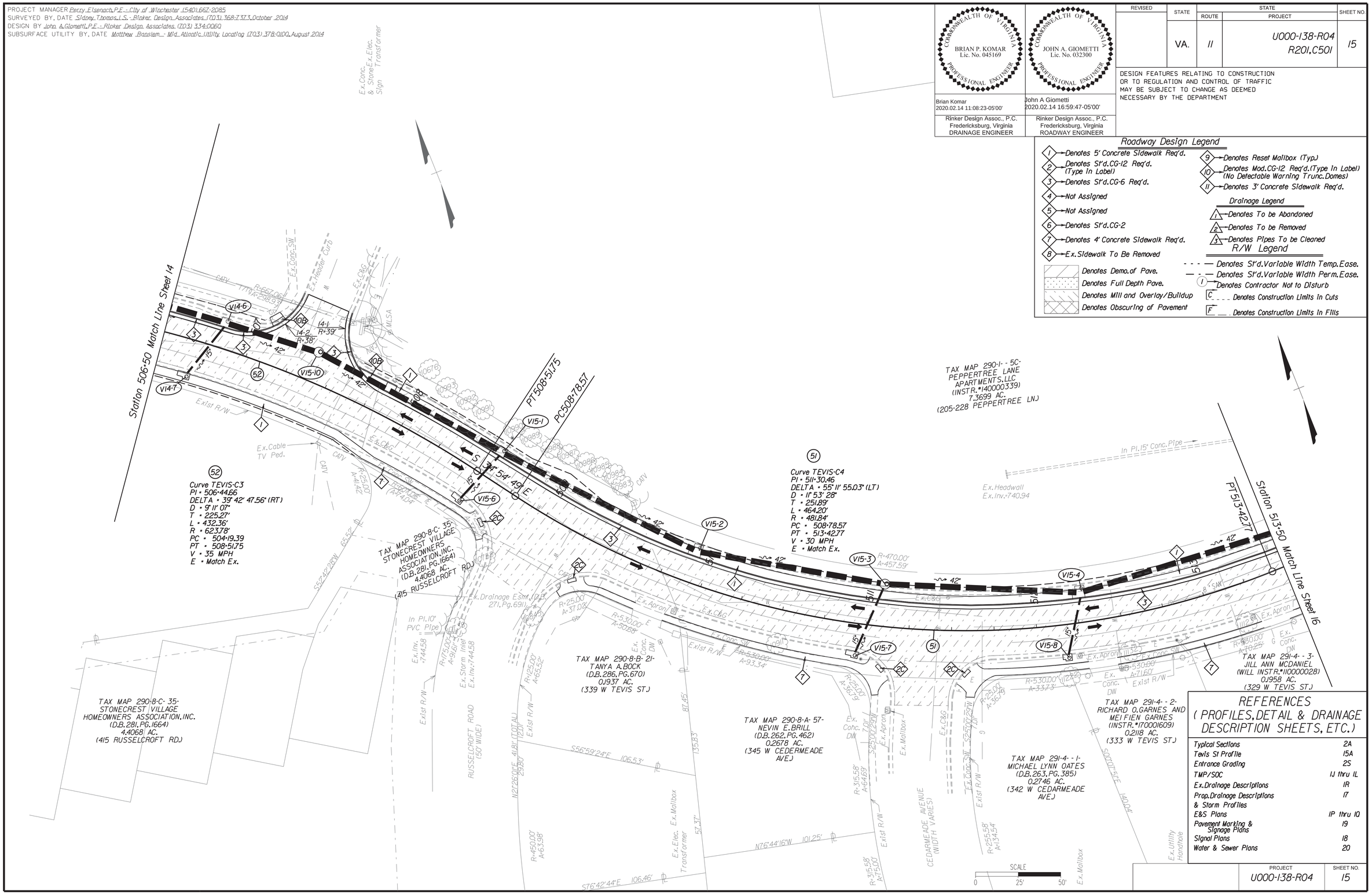

BRIAN P. KOMAR
Lic. No. 045169
COMMONWEALTH OF VIRGINIA
PROFESSIONAL ENGINEER

Brian Komar
2020.02.14 11:08:23-05'00'

Rinker Design Assoc., P.C.
Fredericksburg, Virginia
DRAINAGE ENGINEER

JOHN A. GIOMETTI
Lic. No. 032300
COMMONWEALTH OF VIRGINIA
PROFESSIONAL ENGINEER

John A Giometti
2020.02.14 16:59:47-05'00'

Rinker Design Assoc., P.C.
Fredericksburg, Virginia
ROADWAY ENGINEER

REVISED	STATE	STATE ROUTE	STATE PROJECT	SHEET NO.
	VA.	11	U000-138-R04 R201, C501	15

DESIGN FEATURES RELATING TO CONSTRUCTION OR TO REGULATION AND CONTROL OF TRAFFIC MAY BE SUBJECT TO CHANGE AS DEEMED NECESSARY BY THE DEPARTMENT

Roadway Design Legend

- 1 → Denotes 5' Concrete Sidewalk Req'd.
- 2 → Denotes St'd.CG-12 Req'd. (Type In Label)
- 3 → Denotes St'd.CG-6 Req'd.
- 4 → Not Assigned
- 5 → Not Assigned
- 6 → Denotes St'd.CG-2
- 7 → Denotes 4' Concrete Sidewalk Req'd.
- 8 → Ex. Sidewalk To Be Removed
- 9 → Denotes Reset Mailbox (Typ.)
- 10 → Denotes Mod.CG-12 Req'd.(Type In Label) (No Detectable Warning Trunc.Domes)
- 11 → Denotes 3' Concrete Sidewalk Req'd.

Denotes Demo. of Pave.
Denotes Full Depth Pave.
Denotes Mill and Overlay/Buildup
Denotes Obscuring of Pavement

Drainage Legend

- 1 → Denotes To be Abandoned
- 2 → Denotes To be Removed
- 3 → Denotes Pipes To be Cleaned

R/W Legend

- Denotes St'd.Variable Width Temp.Ease.
- Denotes St'd.Variable Width Perm.Ease.
- (1) → Denotes Contractor Not to Disturb
- C Denotes Construction Limits In Cuts
- F Denotes Construction Limits In Fills

REFERENCES (PROFILES, DETAIL & DRAINAGE DESCRIPTION SHEETS, ETC.)

Typical Sections	2A
Tevis St Profile	15A
Entrance Grading	2S
TMP/SOC	1J thru 1L
Ex. Drainage Descriptions	1R
Prop. Drainage Descriptions & Storm Profiles	17
E&S Plans	1P thru 10
Pavement Marking & Signage Plans	19
Signal Plans	18
Water & Sewer Plans	20

PROJECT	SHEET NO.
U000-138-R04	15

2/14/2020
9:06:58 AM

d10301301 5a.dgn
Plotted By: mbeales

PROJECT MANAGER Perry Eisenach, P.E. - City of Winchester (540) 667-2085
SURVEYED BY, DATE Sidney Thomas, L.S. - Rinker Design Associates (703) 368-7373, October 2014
DESIGN BY John A. Giometti, P.E. - Rinker Design Associates, (703) 334-0060
SUBSURFACE UTILITY BY, DATE Matthew Bansten - Mid Atlantic Utility Locating (703) 378-0100, August 2014

Rinker Design Associates, P.C.
Civil Engineering - Surveying - Land Planning
Transportation - Environmental
Right of Way Services

Office Locations
Headquarters: 10211 Fairfax Blvd. Suite 100, Fairfax, VA 22030 Phone: (703) 334-0060 Fax: (703) 352-0265
4417 Brookfield Corporate Drive Suite 110, Chantilly, VA 20151 Phone: (703) 378-0100 Fax: (703) 378-0110
4309 Emerald Chantilly Drive Suite 100, Chantilly, VA 20151 Phone: (703) 378-0100 Fax: (703) 378-0110

PROFILE TEVIS STREET
STATIONS 506+50 TO 513+50

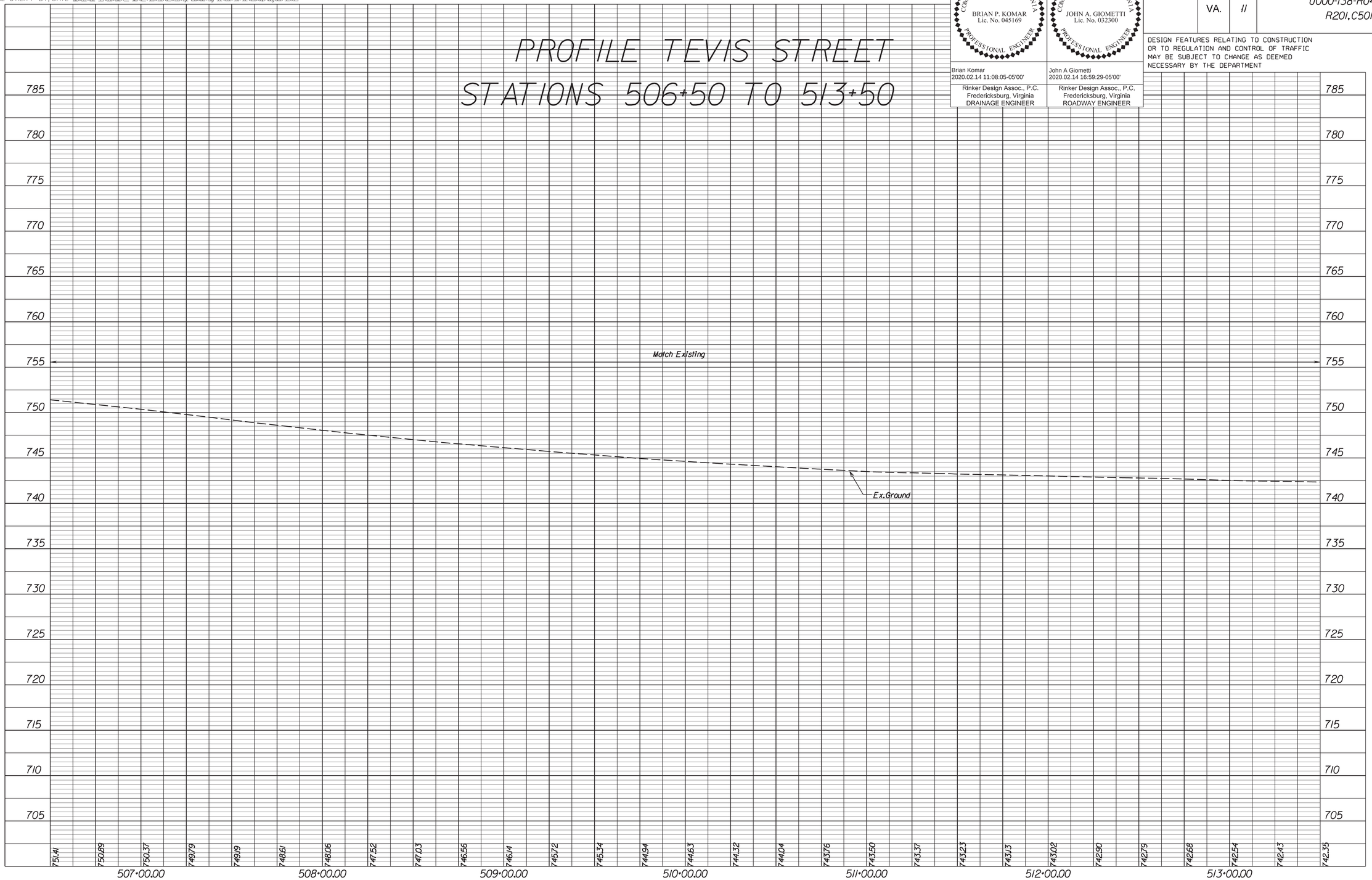

BRIAN P. KOMAR
Lic. No. 045169
COMMONWEALTH OF VIRGINIA
PROFESSIONAL ENGINEER

Brian Komar
2020.02.14 11:08:05-05'00'
Rinker Design Assoc., P.C.
Fredericksburg, Virginia
DRAINAGE ENGINEER

JOHN A. GIOMETTI
Lic. No. 032300
COMMONWEALTH OF VIRGINIA
PROFESSIONAL ENGINEER

John A Giometti
2020.02.14 16:59:29-05'00'
Rinker Design Assoc., P.C.
Fredericksburg, Virginia
ROADWAY ENGINEER

REVISED	STATE	STATE ROUTE	STATE PROJECT	SHEET NO.
	VA.	11	U000-138-R04 R201, C501	15A

DESIGN FEATURES RELATING TO CONSTRUCTION OR TO REGULATION AND CONTROL OF TRAFFIC MAY BE SUBJECT TO CHANGE AS DEEMED NECESSARY BY THE DEPARTMENT

PROJECT	SHEET NO.
U000-138-R04	15A

2/14/2020
9:07:02 AM

d10301301 6.dgn
Plotted By: mbeales

PROJECT MANAGER Perry Eisenach, P.E. - City of Winchester (540) 667-2085
SURVEYED BY, DATE Sidney Thomas, L.S. - Rinker Design Associates (703) 368-7373, October 2014
DESIGN BY John A. Giometti, P.E. - Rinker Design Associates (703) 334-0060
SUBSURFACE UTILITY BY, DATE Matthew Bansiem - Mid Atlantic Utility Locating (703) 378-0100, August 2014

Rinker Design Associates, P.C.
Civil Engineering - Surveying - Land Planning
Transportation - Environmental
Right of Way Services

Office Locations
Main Office
4417 Evergreen Boulevard
Suite 100
Harrisonburg, VA 22807
Phone: (540) 434-5300
Fax: (540) 433-2676

Winchester Office
1400 Jim Bishop Drive
Suite 100
Winchester, VA 22601
Phone: (540) 667-2085
Fax: (540) 667-2086

Fredericksburg Office
4417 Evergreen Boulevard
Suite 100
Harrisonburg, VA 22807
Phone: (540) 434-5300
Fax: (540) 433-2676

BRIAN P. KOMAR
Lic. No. 045169
COMMONWEALTH OF VIRGINIA
PROFESSIONAL ENGINEER

Brian Komar
2020.02.14 11:07:48-05'00'

Rinker Design Assoc., P.C.
Fredericksburg, Virginia
DRAINAGE ENGINEER

JOHN A. GIOMETTI
Lic. No. 032300
COMMONWEALTH OF VIRGINIA
PROFESSIONAL ENGINEER

John A Giometti
2020.02.14 16:59:11-05'00'

Rinker Design Assoc., P.C.
Fredericksburg, Virginia
ROADWAY ENGINEER

REVISED	STATE	STATE ROUTE	STATE PROJECT	SHEET NO.
	VA.	11	U000-138-R04 R201,C501	16

DESIGN FEATURES RELATING TO CONSTRUCTION OR TO REGULATION AND CONTROL OF TRAFFIC MAY BE SUBJECT TO CHANGE AS DEEMED NECESSARY BY THE DEPARTMENT

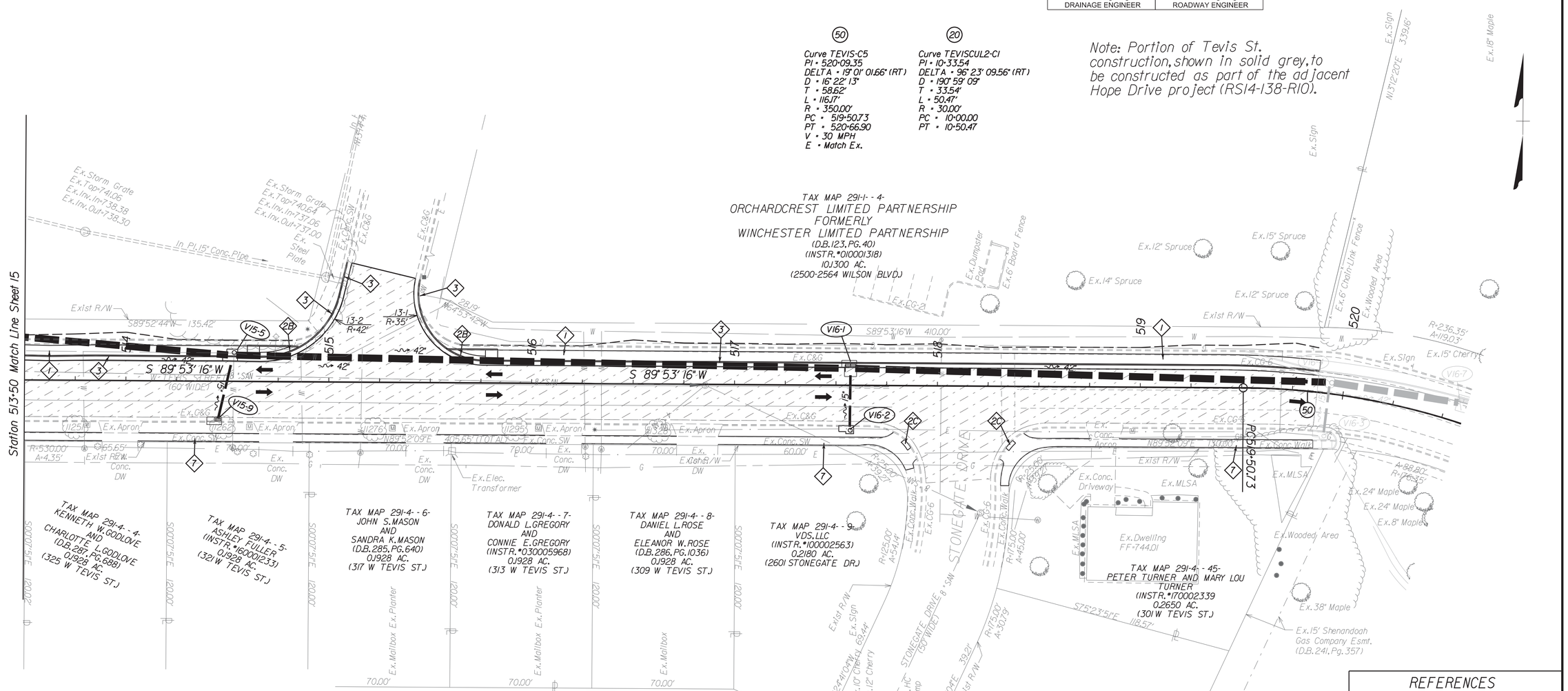

Roadway Design Legend

1. Denotes 5' Concrete Sidewalk Req'd.
2. Denotes St'd. CG-12 Req'd. (Type In Label)
3. Denotes St'd. CG-6 Req'd.
4. Not Assigned
5. Not Assigned
6. Denotes St'd. CG-2
7. Denotes 4' Concrete Sidewalk Req'd.
8. Ex. Sidewalk To Be Removed
9. Denotes Reset Mailbox (Typ.)
10. Denotes Mod. CG-12 Req'd. (Type In Label) (No Detectable Warning Trunc. Domes)
11. Denotes 3' Concrete Sidewalk Req'd.

Denotes Demo. of Pave.
Denotes Full Depth Pave.
Denotes Mill and Overlay/Buildup
Denotes Obscuring of Pavement

Drainage Legend

1. Denotes To be Abandoned
2. Denotes To be Removed
3. Denotes Pipes To be Cleaned

R/W Legend

- - - — Denotes St'd. Variable Width Temp. Ease.
— · — Denotes St'd. Variable Width Perm. Ease.
(1) Denotes Contractor Not to Disturb
C _ _ _ Denotes Construction Limits In Cuts
F _ _ Denotes Construction Limits In Fills

REFERENCES (PROFILES, DETAIL & DRAINAGE DESCRIPTION SHEETS, ETC.)

Typical Sections	2A
Tevis St Profile	16A
Entrance Grading	2S
TMP/SOC	1J thru 1L
Ex. Drainage Descriptions	1R
Prop. Drainage Descriptions & Storm Profiles	17
E&S Plans	1P thru 1Q
Pavement Marking & Signage Plans	19
Signal Plans	18
Water & Sewer Plans	20

PROJECT	SHEET NO.
U000-138-R04	16

2/14/2020
9:07:05 AM

d1030130160.dgn
Plotted By: mbeales

PROJECT MANAGER Perry Eisenach, P.E. - City of Winchester (540) 667-2085
SURVEYED BY, DATE Sidney Thomas, L.S. - Rinker Design Associates (703) 368-7373, October 2014
DESIGN BY John A. Giometti, P.E. - Rinker Design Associates (703) 334-0060
SUBSURFACE UTILITY BY, DATE Matthew Bansiem - Mid Atlantic Utility Locating (703) 378-0100, August 2014

Office Locations
Corporate Headquarters: 4607 Daly Drive, Suite 100, Chantilly, VA 20151, Phone: (703) 378-0100, Fax: (703) 378-0102
Northern Virginia: 4607 Daly Drive, Suite 100, Chantilly, VA 20151, Phone: (703) 378-0100, Fax: (703) 378-0102
Fredericksburg: 2000 Princess Anne Street, Suite 1-A, Fredericksburg, VA 22401, Phone: (540) 373-8300, Fax: (540) 373-8302
Rinker Design Associates, P.C.
Civil Engineering • Surveying • Environmental
Transportation • Environmental
Right of Way Services
GRDA Rinker
SINCE ESTABLISHED IN MCMLXXVIII

BRIAN P. KOMAR
Lic. No. 045169
COMMONWEALTH OF VIRGINIA
PROFESSIONAL ENGINEER
Brian Komar
2020.02.14 11:07:26-05'00'
Rinker Design Assoc., P.C.
Fredericksburg, Virginia
DRAINAGE ENGINEER

JOHN A. GIOMETTI
Lic. No. 032300
COMMONWEALTH OF VIRGINIA
PROFESSIONAL ENGINEER
John A Giometti
2020.02.14 16:58:54-05'00'
Rinker Design Assoc., P.C.
Fredericksburg, Virginia
ROADWAY ENGINEER

REVISED	STATE	STATE ROUTE	STATE PROJECT	SHEET NO.
	VA.	11	U000-138-R04 R201, C501	16A

DESIGN FEATURES RELATING TO CONSTRUCTION OR TO REGULATION AND CONTROL OF TRAFFIC MAY BE SUBJECT TO CHANGE AS DEEMED NECESSARY BY THE DEPARTMENT

PROFILE TEVIS STREET
STATIONS 513+50 TO 520+66.90

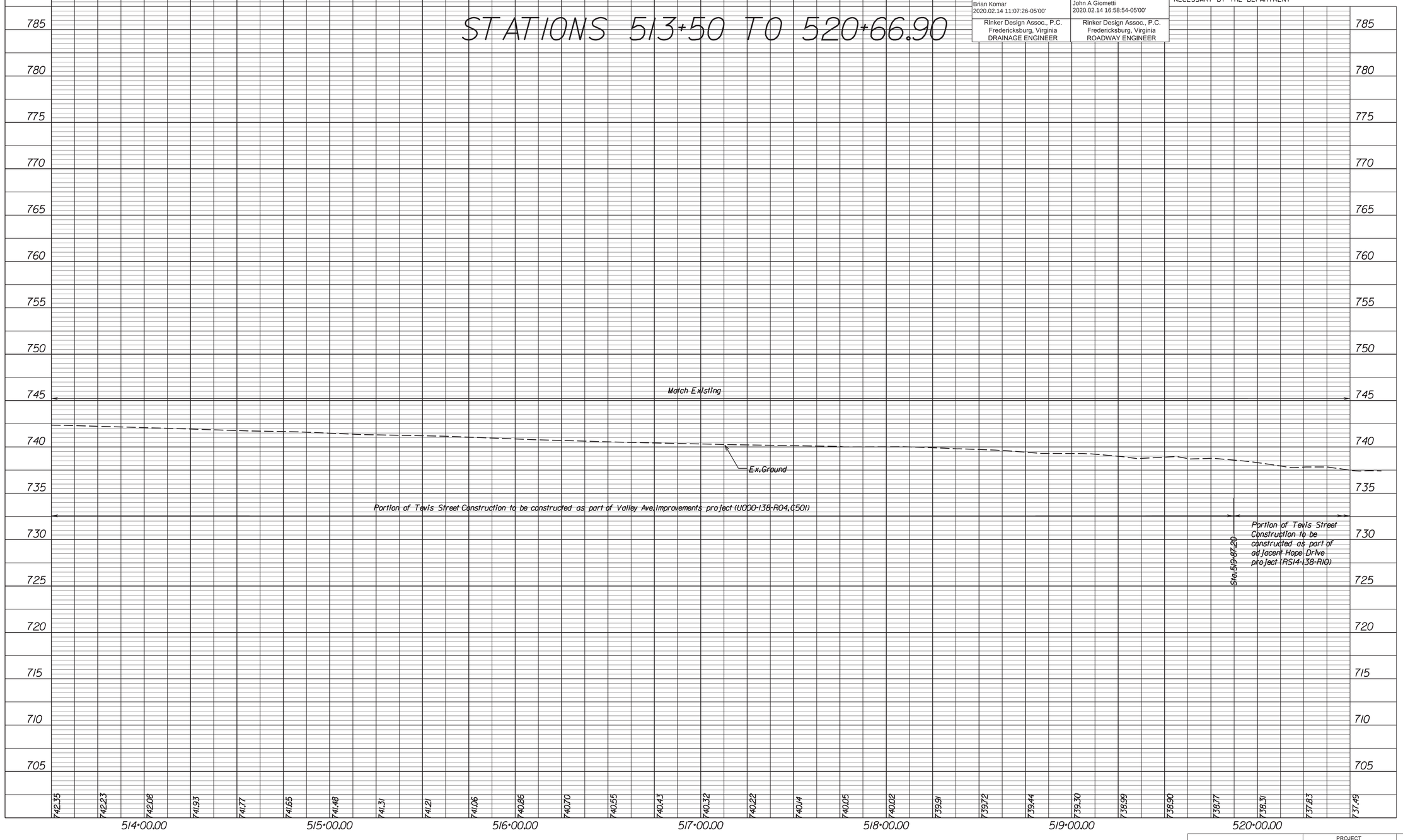

PROJECT	SHEET NO.
U000-138-R04	16A

PROJECT MANAGER Perry Eisenach, P.E. - City of Winchester (540).667-2085
SURVEYED BY, DATE Sidney Thomas, L.S. - Rinker Design Associates (703).368-7373, October 2014
DESIGN BY John A. Glomelli, P.E. - Rinker Design Associates (703) 334-0060
SUBSURFACE UTILITY BY, DATE Matthew Ransiem - Mid Atlantic Utility Locating (703) 378-0100, August 2014

Office Locations
Rinker Design Associates, P.C.
Civil Engineering • Surveying • Environmental
Transportation • Land Development • Right of Way Services
Rinker rda
SINCE TWENTY-EIGHT B.R.B.
Main Office
107 N. Kent Street, Suite 100, Winchester, VA 22601
Phone: (540) 667-2085
Fax: (540) 667-2089
Fredericksburg Office
2001 Princess Anne Street, Suite 101, Fredericksburg, VA 22401
Phone: (540) 373-4030
Fax: (540) 373-4031
Northern Virginia Office
5203 Leesburg Pike, Suite 1100, Falls Church, VA 22041
Phone: (703) 334-0060
Fax: (703) 671-6086

Sheet 4

(V4-1) I STD.DI-3B REQ'D.
L=6', H=6.2' INV.749.70
STD.ST-1 REQ'D.

(V4-1 – V4-9) 5'-15" STORM SEWER PIPE REQ'D.(5' COVER)
INV.IN) 749.70 INV.OUT) 750.00

(V4-2) I STD.DI-2B REQ'D
L=4', H=4.4' INV.751.25

(V4-2 – V4-4) 9'-15" STORM SEWER PIPE REQ'D.(3' COVER)
INV.IN) 751.25 INV.OUT) 751.17

(V4-4) PRECAST CONCRETE PIPE TEE REQ'D.
INV.= 751.17
ACCEPT EX.24"x38" CONC.PIPE

(EX.109 – V4-4) EX.59'-24"x38" STORM SEWER PIPE
INV.OUT) 751.07 (NO EX.109 INFO)
(CONTRACTOR TO VERIFY PIPE TEE INVERT
PRIOR TO FABRICATION)

(V4-4 – EX.108) EX.242'-24"x38" STORM SEWER PIPE REQ'D.
INV.IN) 751.07 INV.OUT) 749.32

(V4-3) 5.7 LF MH-1 or MH-2 REQ'D.
1 STD.MH-1 FRAME & COVER REQ'D.
INV.= 752.40
18" METAL PIPE, INV.= 757.54
STD.IS-1 REQ'D.
STD.ST-1 REQ'D.

(V4-3 – V4-10) 8'-18" STORM SEWER PIPE REQ'D.(5' COVER)
INV.IN) 752.40 INV.OUT) 752.10

(V4-10) 5.6 LF HANSON SHALLOW MH REQ'D.
(DETAIL PROVIDED SHT.17A)
1 STD.MH-1 FRAME & COVER REQ'D.
INV.OUT = 752.00
ACCEPT EX.12" RCP PIPE, INV.= 753.24
ACCEPT PROP 18" PIPE, INV.752.10
STD.IS-1 REQ'D.
STD.ST-1 REQ'D.

(V4-10 – V4-8) 12'-18" STORM SEWER PIPE REQ'D.(4' COVER)
INV.IN) 752.00 INV.OUT) 751.75

(V4-8) 1 STD.DI-2B REQ'D.
H=5.9', L=10', INV.751.65
1-IS-1 REQ'D.

(V4-7 – V4-8) 7'-24" STORM SEWER PIPE REQ'D.(4' COVER)
INV.IN) 751.99 INV.OUT) 751.85

(V4-8 – V4-9) EX.15" STORM SEWER PIPE TO BE REMOVED
PROP.102'-24" STORM SEWER PIPE REQ'D (4' COVER)
INV.IN) 751.65 INV.OUT) 750.12

(V4-9) 5.7 LF STD.6' DOGHOUSE MH REQ'D.
1 STD.MH-1 FRAME & COVER REQ'D.
ROTATE TOP TO CENTER OF TRAVEL LANE
INV IN.= 749.60 (FROM V4-8)
INV IN.= 749.44 (FROM V4-1)
INV OUT = 749.27
ACCEPT EX.15" PIPE - PIPE TO BE REMOVED
STD.IS-1 REQ'D.
STD.ST-1 REQ'D.

(V4-9 – V4-6) EX.15" STORM SEWER PIPE TO BE REMOVED
PROP.41'-24" STORM SEWER PIPE REQ'D (4' COVER)
INV.IN) 749.27 INV.OUT) 748.60

(V4-6) (EX STR.87) REPLACE EXISTING DI W/ MH-1 OR MH-2 MANHOLE
1 STD.MH-1 FRAME & COVER REQ.
ROTATE TOP TO CENTER OF TRAVEL LANE
EX.INV.= 748.41 (PIPE REMOVED)
EX.INV.OUT = 748.37 (PIPE REMOVED)
PROP.INV.OUT = 748.37
ACCEPT EX.15" CONC.PIPE, INV.= 748.41 (PIPE TO BE REMOVED)
ACCEPT PROP.24" STORM PIPE, INV.= 748.60
EX.TOP = 754.74
PROP.TOP = 754.83

(V4-6 – V4-5) EX.15" STORM SEWER PIPE TO BE REMOVED
PROP.110'-24" STORM SEWER PIPE REQ'D (6' COVER)
INV.IN) 748.37 INV.OUT) 747.00

(V4-5) (EX STR.85) REPLACE EXISTING DI AND MH STR.
W/ STD.DI-2EE STR.
L=6', H=9.2' INV.743.63
ACCEPT EX.20"x30" CONC.PIPE, INV.= 743.84
ACCEPT EX.15" CONC.PIPE, INV.= 744.27 (PIPE TO BE ABANDONED)
ACCEPT PROP.24" CONC.PIPE, INV.= 747.00
EX.T.C.= 753.17
PROP.T.C.= 752.79
1-STD.IS-1 REQ'D.

(V4-14) (EX.STR.84) ADJUST EXISTING MANHOLE
EX.INV.IN = 742.61
INV.OUT = 742.60
EX.TOP = 749.26
PROP.TOP = 749.40
ADJUST TO GRADE, RAISE 0.14'

(V4-7) (EX STR.89) MODIFY EXISTING DI TO MANHOLE
1 STD.MH-1 FRAME & COVER REQ.
ROTATE TOP TO CENTER OF TRAVEL LANE
INV.= 752.09
ACCEPT EX.24" HDPE PIPE, INV.= 752.09
EX.T.C.= 757.13
PROP.TOP = 757.62
ADJUST TO GRADE, RAISE 0.49'
1-STD.IS-1 REQ'D.

(V4-11) (EX.STR.91) ADJUST EXISTING MANHOLE
EX.INV.IN = 752.31
INV.OUT = 752.27
EX.TOP = 758.21
PROP.TOP = 758.48
ADJUST TO GRADE, RAISE 0.27'

(V4-12) (EX.STR.92) ADJUST EXISTING MANHOLE
EX.INV.IN = 756.18
INV.OUT = 752.59
EX.TOP = 759.49
PROP.TOP = 759.66
ADJUST TO GRADE, RAISE 0.17'

(V4-13) (EX.STR.108) ADJUST EXISTING MANHOLE
EX.INV.IN = 749.32
INV.OUT = 748.37
EX.TOP = 751.82
PROP.TOP = 751.49
ADJUST TO GRADE, LOWER 0.33'

Sheet 5

(V5-1) 1 STD.DI-3B REQ'D.
L=4', H=5.1' INV.759.92
STD.ST-1 REQ'D.

(V5-1 – V5-5) 6'-15" STORM SEWER PIPE REQ'D.(4' COVER)
INV.IN) 759.92 INV.OUT) 759.87

(V5-2) 1 MOD.DI-1 (SHALLOW SD-5)
L=8.28', 3 GRATES, H=3.2' INV.761.65

(V5-2 – V5-7) 41'-15" STORM SEWER PIPE REQ'D.(4' COVER)
INV.IN) 761.65 INV.OUT) 759.13

(V5-3) 1 STD.DI-2B REQ'D.
L=6', H=8.4' INV.760.10
STD.ST-1 REQ'D.

(V5-3 – V5-6) 60'-15" STORM SEWER PIPE REQ'D.(7' COVER)
INV.IN) 760.10 INV.OUT) 759.73

(V5-4) 1 MODIFIED DI-1 (SHALLOW) SD-5 STR.REQ'D.
L=5.52', 2 GRATES, H=2.9' INV.767.50

(V5-4 – V5-8) 49'-15" STORM SEWER PIPE REQ'D.(3' COVER)
INV.IN) 767.50 INV.OUT) 766.41

(V5-5) (EX.STR.94) MODIFY EXISTING DI TO MANHOLE
1 STD.MH-1 FRAME & COVER REQ.
ROTATE TOP TO CENTER OF TRAVEL LANE
INV.= 759.77
ACCEPT 15" STORM PIPE, INV.= 759.87
EX.T.C.= 763.92
PROP.TOP.= 764.54
ADJUST TO GRADE, RAISE 0.62'
1-STD.IS-1 REQ'D.

(V5-6) (EX.STR.95) REMOVE EXISTING MANHOLE
CONVERT EXISTING MH-1 TO
STD.6' MH-2
1- STD.MH-1 FRAME & COVER REQ'D
INV.IN = 763.13
INV.IN = 763.13 (FROM V5-10)
INV.OUT = 759.63
EX.TOP = 767.63
PROP.TOP = 767.24
1-STD.IS-1 REQ'D.

(V5-7) (EX.STR.93) ADJUST EXISTING MANHOLE
INV.IN = 759.13 (EX 95)
INV.IN = 759.34 (EX 94)
INV.OUT = 759.12
EX.TOP = 764.30
PROP.TOP = 764.73
ADJUST TO GRADE, RAISE 0.43'

(V5-8) (EX.STR.97) ADJUST EXISTING MANHOLE
INV.IN = 765.83
INV.OUT = 765.68
EX.TOP = 770.10
PROP.TOP = 769.97
ADJUST TO GRADE, LOWER 0.13'

(V5-9) (EX.STR.98) ADJUST EXISTING DI STR.
INV.OUT = 766.26
EX.TOP = 770.16
PROP.TOP = 770.30
ADJUST TO GRADE, RAISE 0.14'
1-STD.IS-1 REQ'D.

(V5-10) (EX STR.96) ADJUST EXISTING DI
EX.INV.OUT = 763.28
EX.T.C.= 767.55
PROP.T.C.= 767.54
ADJUST TO GRADE, LOWER 0.01'

Sheet 6

(V6-1) 1 STD.DI-3B REQ'D.
L=6', H=4.6' INV.767.24
STD.ST-1 REQ'D.

(V6-1 – V5-9) 176'-21" STORM SEWER PIPE REQ'D.(3' COVER)
INV.IN) 767.24 INV.OUT) 766.36

(V6-2) 1 MOD.DI-1 (SHALLOW SD-5)
L=5.52', 2 GRATES, H=2.7' INV.770.25

(V6-2 – V6-3) 63'-15" STORM SEWER PIPE REQ'D.(2' COVER)
INV.IN) 770.25 INV.OUT) 769.94

(V6-3) 1 STD.DI-4B REQ'D.
L=12', H=4.8' INV.767.98
STD.IS-1 REQ'D.
STD.ST-1 REQ'D.

(V6-3 – V6-1) 77'-18" STORM SEWER PIPE REQ'D.(3' COVER)
INV.IN) 767.98 INV.OUT) 767.34

(V6-4) 1 STD.DI-2B REQ'D.
L=8', H=5.6' INV.769.11
STD.ST-1 REQ'D.

(V6-4 – V6-3) 226'-15" STORM SEWER PIPE REQ'D.(4' COVER)
INV.IN) 769.11 INV.OUT) 768.08

Sheet 7

(V7-1) 1 MOD.DI-1 (SHALLOW SD-5)
L=5.52', 2 GRATES, H=3.6' INV.771.26

(V7-1 – V7-2) 218'-15" STORM SEWER PIPE REQ'D.(2' COVER)
INV.IN) 771.26 INV.OUT) 770.17

(V7-2) 1 MOD.DI-1 (SHALLOW SD-5)
L=5.52', H=3.9', 2-GRATES, INV.770.07
1-STD.IS-1 REQ'D.

(V7-2 – V7-3) 109'-18" STORM SEWER PIPE REQ'D.(2' COVER)
INV.IN) 770.07 INV.OUT) 769.53

(V7-3) 4.8 LF HANSON SHALLOW MH REQ'D.
1 STD.MH-1 FRAME & COVER REQ'D.
(DETAIL PROVIDED SHT.17A)
INV.= 769.43
STD.IS-1 REQ'D.
STD.ST-1 REQ'D.

(V7-3 – V7-12) 18'-18" STORM SEWER PIPE REQ'D.(3' COVER)
INV.IN) 769.43 INV.OUT) 769.34

(V7-14) 1 MOD.DI-1 (SHALLOW SD-5)
L=8.28', H=2.6', 3-GRATES, INV.= 771.60

(V7-14 – V7-16) 152'-15" STORM SEWER PIPE REQ'D.(1' COVER)
(MINIMUM PIPE COVER)
INV.IN) 771.60 INV.OUT) 770.80

(V7-16) 3.8 LF HANSON SHALLOW MH REQ'D.
1 STD.MH-1 FRAME & COVER REQ'D.
(DETAIL PROVIDED SHT.17A)
INV.= 770.70
STD.IS-1 REQ'D.
STD.ST-1 REQ'D.

(V7-16 – V7-4) 20'-15" STORM SEWER PIPE REQ'D.(3' COVER)
INV.IN) 770.70 INV.OUT) 770.60

(V7-4) 1 MOD.DI-1 (SHALLOW SD-5)
L=5.52', H=3.7, 2-GRATES, INV.= 770.50

(V7-4 – V7-2) 59'-15" STORM SEWER PIPE REQ'D.(3' COVER)
INV.IN) 770.50 INV.OUT) 770.17

(V7-5) 1 MOD.DI-1 (SHALLOW SD-5)
L=8.28', 3 GRATES, H=2.9'
INV.= 771.49

(V7-5 – V7-8) 4'-15" STORM SEWER PIPE REQ'D.(2' COVER)
INV.IN) 771.49 INV.OUT) 771.43

(V7-6) 1 STD.DI-2BB REQ'D.
L=4', H=9.3' INV.767.09
STD.IS-1 REQ'D.
STD.ST-1 REQ'D.

(V7-6 – V8-12) 162'-18" STORM SEWER PIPE REQ'D.(11' COVER)
INV.IN) 767.09 INV.OUT) 764.53

(V7-7) 1 STD.DI-2B REQ'D.
L=4', H=8.0' INV.768.25
STD.IS-1 REQ'D.
STD.ST-1 REQ'D.

(V7-7 – V7-6) 60'-18" STORM SEWER PIPE REQ'D.(8' COVER)
INV.IN) 768.25 INV.OUT) 767.19

COMMONWEALTH OF VIRGINIA
BRIAN P. KOMAR
Lic. No. 045169
PROFESSIONAL ENGINEER

Brian Komar
2020.02.14 10:55:12-05'00'

Rinker Design Assoc., P.C.
Fredericksburg, Virginia
DRAINAGE ENGINEER

REVISED	STATE	STATE ROUTE	STATE PROJECT	SHEET NO.
	VA.	11	U000-138-R04 C501	17

DESIGN FEATURES RELATING TO CONSTRUCTION OR TO REGULATION AND CONTROL OF TRAFFIC MAY BE SUBJECT TO CHANGE AS DEEMED NECESSARY BY THE DEPARTMENT

PROJECT	SHEET NO.
U000-138-R04	17

PROJECT MANAGER Perry Eisenach, P.E. - City of Winchester (540) 667-2085
SURVEYED BY, DATE Sidney Thomas, L.S. - Rinker Design Associates (703) 368-7373, October 2014
DESIGN BY John A. Glomett, P.E. - Rinker Design Associates (703) 334-0060
SUBSURFACE UTILITY BY, DATE Matthew Bansiem - Mid Atlantic Utility Locating (703) 378-0100, August 2014

Office Locations
Corporate Headquarters: 2101 Parkway Boulevard, Suite 100, Stafford, VA 22556, Phone: (540) 659-3211, Fax: (540) 659-3217
Fredericksburg: 2101 Plank Road, Suite 100, Fredericksburg, VA 22401, Phone: (540) 373-8000, Fax: (540) 373-8001

Rinker Design Associates, P.C.
Civil Engineering - Surveying - Land Planning
Transportation - Environmental - Right of Way Services
SINCE ESTABLISHED IN MCMLXXVIII

V7-8 (EX STR.74) MODIFY EXISTING JB-1
REPLACE EX.GRATE SLAB UNIT W/
1-STD.MH-1 FRAME & COVER AND SOLID
SLAB UNIT
ROTATE TOP TO CENTER OF TRAVEL LANE
EX.INV.IN = 771.58
EX.INV.IN = 771.43
EX.INV.OUT = 771.39
PROP.INV.OUT = 771.39
EX.TOP = 774.23
PROP.TOP = 774.23
1-STD.IS-1 REQ'D.

V7-9 3.2 LF STD.MH-1 OR 2 REQ'D.
1 STD.MH-1 FRAME & COVER REQ.
ROTATE TOP TO CENTER OF TRAVEL LANE
INV.= 771.00
STD.IS-1 REQ'D.

V7-13 12" EW-1
INV.= 771.35 (TO V7-9)

V7-9 — V7-16 19'-15" STORM SEWER PIPE REQ'D.(3' COVER)
INV.(IN) 771.00 INV.(OUT) 770.80

V7-13 — V7-9 11'-12" STORM SEWER PIPE REQ'D.(2' COVER)
INV.(IN) 772.35 INV.(OUT) 771.60

V7-10 1 STD.DI-2B REQ'D.
L=4', H=5.9' INV.770.05
STD.IS-1 REQ'D.
STD.ST-1 REQ'D.

V7-10 — V7-7 65'-18" STORM SEWER PIPE REQ'D.(6' COVER)
INV.(IN) 770.05 INV.(OUT) 769.08

V7-11 (EX STR.75) EXISTING DI STRUCTURE
TO BE REMOVED AND REPLACED W/
MOD.DI-1 (SHALLOW SD-5)
L=11.04', H=2.2', 4 GRATES, INV.771.16
EX.T.C.= 773.33

V7-11 — V7-10 67'-18" STORM SEWER PIPE REQ'D.(1' COVER)
PROP.PIPE LESS THAN 2' MIN.COVER
INV.(IN) 771.16 INV.(OUT) 770.15

V7-12 (EX STR.72) EXISTING MANHOLE
EX.INV.IN = 769.24 (FROM EX 7.3)
EX.INV.OUT = 769.57 (TO EX 7.1)
EX 52'-18" PIPE TO EX.7.1
TO BE ABANDONED AND REPLACED
W/ V7-12 TO V7-15
PROP.INV.IN = 769.34 (FROM V7-3)
PROP.INV.OUT = 769.14 (TO V7-15)
EX.TOP = 773.80
PROP.TOP = 773.65
ADJUST TO GRADE, LOWER 0.15'
1-STD.IS-1 REQ'D.

V7-12 — V7-15 48'-18" STORM SEWER PIPE REQ'D.(1' COVER)
PROP.PIPE LESS THAN 2' MIN.COVER
INV.(IN) 769.14 INV.(OUT) 768.72

V7-15 (EX STR.71) MODIFY EXISTING MANHOLE
EX.INV.IN = 768.72 (FROM EX72)
(ABANDON EX.15" PIPE)
EX.INV.OUT = 768.63 (TO EX 7.0)
PROP.INV.IN = 769.14 (FROM V7-12)
(ACCEPT PROP.18" PIPE)
EX.TOP = 771.83

Sheet 8

V8-2 1- STD.MOD.DI-1 (SHALLOW SD-5)
L=5.52', 2 GRATES, H=3.8' INV.773.00

V8-2 — V8-14 13'-15" STORM SEWER PIPE REQ'D.(3' COVER)
INV.(IN) 773.00 INV.(OUT) 772.88

V8-3 1 STD.DI-2BB REQ'D.
L=8', H=14.6' INV.761.25
STD.ST-1 REQ'D.
STD.SL-1 REQ'D.

V8-3 — V8-5 198'-24" STORM SEWER PIPE REQ'D.(12' COVER)
INV.(IN) 761.25 INV.(OUT) 759.27

V8-5 1 STD.DI-2BB REQ'D.
L=12', H=13.0' INV.759.17
STD.IS-1 REQ'D.
STD.ST-1 REQ'D.
STD.SL-1 REQ'D.

V8-5 — V8-6 14'-24" STORM SEWER PIPE REQ'D.(11' COVER)
INV.(IN) 759.17 INV.(OUT) 758.95

V8-6 12.8 LF STD.MH-1 OR 2 REQ'D.
1 STD.MH-1 FRAME & COVER REQ.
ROTATE TOP TO CENTER OF TRAVEL LANE
INV.= 758.76
STD.IS-1 REQ'D.
STD.ST-1 REQ'D.
STD.SL-1 REQ'D.

V8-6 — V9-6 174'-24" STORM SEWER PIPE REQ'D.(11' COVER)
INV.(IN) 758.76 INV.(OUT) 757.02

V8-8 1 STD.DI-3B REQ'D.
L=10', H=6.0' INV.765.30
STD.ST-1 REQ'D.

V8-8 — V8-9 8'-15" STORM SEWER PIPE REQ'D.(4' COVER)
INV.(IN) 765.30 INV.(OUT) 765.15

V8-9 5.2 LF STD.6' DOGHOUSE MH REQ'D.
1 STD.MH-1 FRAME & COVER REQ'D.
ROTATE TOP TO CENTER OF TRAVEL LANE
INV.= 764.96
ACCEPT EX.18" HDPE PIPE, INV.= 765.15
STD.IS-1 REQ'D.
STD.ST-1 REQ'D.

V8-10 1 STD.DI-2BB REQ'D.
L=12', H=14.9' INV.762.09
STD.IS-1 REQ'D.
STD.ST-1 REQ'D.
STD.SL-1 REQ'D.

V8-10 — V8-3 75'-21" STORM SEWER PIPE REQ'D.(13' COVER)
INV.(IN) 762.09 INV.(OUT) 761.35

V8-11 1 STD.DI-2BB REQ'D.
L=4', H=13.6' INV.764.70
STD.ST-1 REQ'D.
STD.SL-1 REQ'D.

V8-11 — V8-13 38'-15" STORM SEWER PIPE REQ'D.(13' COVER)
INV.(IN) 764.70 INV.(OUT) 764.37

V8-12 1 STD.DI-2BB REQ'D.
L=4', H=13.6 INV.764.43
STD.IS-1 REQ'D.
STD.ST-1 REQ'D.
STD.SL-1 REQ'D.

V8-12 — V8-13 13'-21" STORM SEWER PIPE REQ'D.(12' COVER)
INV.(IN) 764.43 INV.(OUT) 764.37

V8-13 13.1 LF STD.MH-1 OR 2 REQ'D.
1 STD.MH-1 FRAME & COVER REQ'D.
ROTATE TOP TO CENTER OF TRAVEL LANE
INV.= 764.27
STD.IS-1 REQ'D.
STD.ST-1 REQ'D.
STD.SL-1 REQ'D.

V8-13 — V8-14 270'-21" STORM SEWER PIPE REQ'D.(13' COVER)
INV.(IN) 764.27 INV.(OUT) 762.92

V8-14 13.3 LF STD.MH-1 OR 2 REQ'D.
1 STD.MH-1 FRAME & COVER REQ'D.
ROTATE TOP TO CENTER OF TRAVEL LANE
INV.= 762.82
1-1/2" STEEL PLATE REQ'D
STD.IS-1 REQ'D.
STD.ST-1 REQ'D.
STD.SL-1 REQ'D.

V8-14 — V8-10 43'-21" STORM SEWER PIPE REQ'D.(13' COVER)
INV.(IN) 762.82 INV.(OUT) 762.19

Sheet 9

V9-7 (EX.STR.60) MODIFY EXISTING DI TO STD.DI-3B
L=10', H=5.1' INV.760.89
EX.INV.IN = 760.91
EX.INV.OUT = 760.89
EX.T.C.= 765.26
PROP.T.C.= 765.94
ADJUST TO GRADE, RAISE 0.68'

V9-1 1 STD.DI-2BB REQ'D.
L=10', H=12.1' INV.756.44
STD.IS-1 REQ'D.
STD.ST-1 REQ'D.
STD.SL-1 REQ'D.

V9-1 — V9-2 202'-24" STORM SEWER PIPE REQ'D.(10' COVER)
INV.(IN) 756.44 INV.(OUT) 754.43

V9-2 1 STD.DI-2BB REQ'D.
L=6', H=10.0' INV.754.33
STD.ST-1 REQ'D.

V9-2 — V9-3 194'-24" STORM SEWER PIPE REQ'D.(8' COVER)
INV.(IN) 754.33 INV.(OUT) 752.39

V9-3 1 STD.DI-2B REQ'D.
L=4', H=8.3' INV.752.29
STD.ST-1 REQ'D.

V9-3 — V9-5 116'-27" STORM SEWER PIPE REQ'D.(6' COVER)
INV.(IN) 752.29 INV.(OUT) 751.13

V9-5 1-STD.HANSON LARGE DIA.MH W/DI-1 TOP REQ'D.
H=7.4' INV.751.03
1-STD.IS-1 REQ'D.

V9-8 1 STD.DI-1 REQ'D.
H=4.0' INV.753.44

V9-8 — V9-5 35'-15" STORM SEWER PIPE REQ'D.(5' COVER)
INV.(IN) 753.44 INV.(OUT) 752.50

V9-5 — V10-2 157'-27" STORM SEWER PIPE REQ'D.(8' COVER)
INV.(IN) 751.03 INV.(OUT) 749.30

V9-4 (EX.STR.59) MODIFY EXISTING DI TO STD.DI-2B
L=18', H=3.7' INV.756.56
ACCEPT EX.24" HDPE PIPE, INV.= 756.62
EX.INV.IN = 756.62
EX.INV.OUT = 756.56
EX.T.C.= 760.80
PROP.T.C.= 760.19
ADJUST TO GRADE, LOWER 0.61'

V9-6 111 LF STD.MH-1 OR 2 REQ'D.
1 STD.MH-1 FRAME & COVER REQ'D.
ROTATE TOP TO CENTER OF TRAVEL LANE
INV.= 756.92
STD.IS-1 REQ'D.
STD.ST-1 REQ'D.
STD.SL-1 REQ'D

V9-6 — V9-1 19'-24" STORM SEWER PIPE REQ'D.(10' COVER)
INV.(IN) 756.92 INV.(OUT) 756.65

V9-9 STD.HANSON SHALLOW MH W/ DI-1 TOP
DOGHOUSE MANHOLE
EX.INV.= 755.05
TOP = 757.68

Sheet 10

V10-2 1 STD.DI-3BB REQ'D.
L=4', H=10.4' INV.747.75
STD.IS-1 REQ'D.
STD.ST-1 REQ'D.

V10-2 — V10-17 39'-27" STORM SEWER PIPE REQ'D.(9' COVER)
INV.(IN) 747.00 INV.(OUT) 747.32

V10-3 (EX.STR.56) MODIFY EXISTING DI TO DI-2B (L=4')
EX.INV.IN = 755.73
EX.INV.OUT = 755.63
EX.TOP = 757.33
PROP.TOP = 757.84
ADJUST TO GRADE, RAISE 0.51'

V10-8 1 STD.DI-1 REQ'D.
H=7.2' INV.750.20
STD.ST-1 REQ'D.

V10-8 — V10-19 27'-15" STORM SEWER PIPE REQ'D.(8' COVER)
INV.(IN) 750.20 INV.(OUT) 749.00

V10-9 1 STD.DI-1 REQ'D.
H=4.2' INV.753.45
STD.ST-1 REQ'D.

V10-9 — V10-12 27'-15" STORM SEWER PIPE REQ'D.(4' COVER)
INV.(IN) 753.45 INV.(OUT) 753.28

V10-10 1 STD.DI-2B REQ'D.
L=10', H=8.7' INV.749.56
STD.ST-1 REQ'D.

V10-10 — V10-20 35'-15" STORM SEWER PIPE REQ'D.(8' COVER)
INV.(IN) 749.56 INV.(OUT) 749.20

V10-11 1 STD.DI-2B REQ'D.
L=8', H=8.6' INV.750.75
STD.ST-1 REQ'D.

V10-11 — V10-13 40'-15" STORM SEWER PIPE REQ'D.(8' COVER)
INV.(IN) 750.75 INV.(OUT) 750.35

V10-12 13.3 LF STD.7' MH-2 REQ'D.
1 STD.MH-1 FRAME & COVER REQ'D.
ROTATE TOP TO CENTER OF TRAVEL LANE
INV.= 744.76
STD.IS-1 REQ'D.
STD.ST-1 REQ'D.
STD.SL-1 REQ'D
1-1/2" STEEL PLATE REQ'D

COMMONWEALTH OF VIRGINIA
BRIAN P. KOMAR
Lic. No. 045169
PROFESSIONAL ENGINEER

Brian Komar
2020.02.14 10:54:45-05'00'
Rinker Design Assoc., P.C.
Fredericksburg, Virginia
DRAINAGE ENGINEER

REVISED	STATE	STATE ROUTE	STATE PROJECT	SHEET NO.
	VA.	11	U000-138-R04 C501	17(1)

DESIGN FEATURES RELATING TO CONSTRUCTION OR TO REGULATION AND CONTROL OF TRAFFIC MAY BE SUBJECT TO CHANGE AS DEEMED NECESSARY BY THE DEPARTMENT

PROJECT	SHEET NO.
U000-138-R04	17(1)

PROJECT MANAGER Perry Eisenach, P.E. - City of Winchester (540) 667-2085
SURVEYED BY, DATE Sidney Thomas, L.S. - Rinker Design Associates (703) 368-7373, October 2014
DESIGN BY John A. Glomelli, P.E. - Rinker Design Associates (703) 334-0060
SUBSURFACE UTILITY BY, DATE Matthew Bansiem - Mid Atlantic Utility Locating (703) 378-0100, August 2014

Rinker Design Associates, P.C.
Civil Engineering • Surveying • Environmental
Transportation • Land Development • Right of Way Services
SINCE EST. 1978

Office Locations
Main Office
4417 Pickett Road
Fairfax, VA 22032
Phone: (703) 334-0060
Fax: (703) 323-0243

Winchester Office
107 North Loudoun Street
Suite 100
Winchester, VA 22601
Phone: (540) 667-2085
Fax: (540) 667-2086

4001 Dominion Boulevard
Suite 106
Glen Allen, VA 23060
Phone: (804) 346-8860
Fax: (804) 346-8861

107 North Loudoun Street
Suite 100
Winchester, VA 22601
Phone: (540) 667-2085
Fax: (540) 667-2086

Sheet 10

VI0-30
I STD.DI-2B REQ'D.
L=12', H=9.0' INV.749.50
STD.ST-1 REQ'D.

VI0-28 — VI0-6
46'-15" STORM SEWER PIPE REQ'D.(7' COVER)
INV.IN) 749.50 INV.(OUT) 749.00

VI0-12 — VI0-13
154'-42" STORM SEWER PIPE REQ'D.(12' COVER)
INV.(IN) 744.76 INV.(OUT) 743.99
BEDDING REQUIREMENT "A"
VDOT PB-1 - NORMAL EARTH FOUNDATION
91 TONS BEDDING MATERIAL AGGREGATE #25 OR #26

VI0-13
14.9 LF STD.6' MH-2 REQ'D.
1 STD.MH-1 FRAME & COVER REQ'D.
ROTATE TOP TO CENTER OF TRAVEL LANE
INV.= 743.89
STD.IS-1 REQ'D.
STD.ST-1 REQ'D.
STD.SL-1 REQ'D.
1-1/2" STEEL PLATE REQ'D.

VI0-13 — VI0-14
53'-42" STORM SEWER PIPE REQ'D.(12' COVER)
INV.(IN) 743.89 INV.(OUT) 743.63
BEDDING REQUIREMENT "A"
VDOT PB-1 - NORMAL EARTH FOUNDATION
31 TONS BEDDING MATERIAL AGGREGATE #25 OR #26

VI0-14
1 STD.DI-4BB REQ'D.
L=8', H=16.0' INV.743.53
STD.ST-1 REQ'D.
STD.SL-1 REQ'D.

VI0-14 — VI0-15
46'-42" STORM SEWER PIPE REQ'D.(12' COVER)
INV.(IN) 743.53 INV.(OUT) 743.30
BEDDING REQUIREMENT "A"
VDOT PB-1 - NORMAL EARTH FOUNDATION
27 TONS BEDDING MATERIAL AGGREGATE #25 OR #26

VI0-15
1 STD.DI-4CC REQ'D.
L=8', H=16.1' INV.743.20
STD.ST-1 REQ'D.
STD.SL-1 REQ'D.

VI0-15 — VI4-2
53'-42" STORM SEWER PIPE REQ'D.(13' COVER)
INV.(IN) 743.20 INV.(OUT) 742.91
BEDDING REQUIREMENT "A"
VDOT PB-1 - NORMAL EARTH FOUNDATION
35 TONS BEDDING MATERIAL AGGREGATE #25 OR #26

VI0-17
10.2 LF STD.5' MH-2 REQ'D.
1 STD.MH-1 FRAME & COVER REQ'D.
ROTATE TOP TO CENTER OF TRAVEL LANE
INV.= 747.13
STD.IS-1 REQ'D.
STD.ST-1 REQ'D.
1-1/2" STEEL PLATE REQ'D.

VI0-17 — VI0-21
45'-36" STORM SEWER PIPE REQ'D.(8' COVER)
INV.(IN) 747.13 INV.(OUT) 746.91
BEDDING REQUIREMENT "C"
VDOT PB-1 - FNDN.SOFT,YIELDING,OR OTHERWISE UNSUITABLE MATL.
38 TONS BEDDING MATERIAL AGGREGATE #25 OR #26

VI0-16
(EX STR.50) REPLACE EXISTING DI
W/ STD.HANSON SHALLOW MH W/ DI-1 TOP
ACCEPT 15" CONC.PIPE,INV.= 755.11
EX.INV.IN = 755.16
EX.INV.OUT = 755.11 (TO BE ABANDONED)
PROP.IN.OUT = 754.30
TOP = 756.97

VI0-16 — VI0-21
27'-15" STORM SEWER PIPE REQ'D.(1' COVER)
INV.(IN) 754.30 INV.(OUT) 753.80
PROP.PIPE LESS THAN 2' MIN.COVER

VI0-18
(EX.STR.53) MODIFY EX.MH
ACCEPT EX.24" HDPE PIPE,INV.= 754.32
EX.INV.IN = 754.53 (STR.54) (TO BE ABANDONED)
EX.INV.IN = 754.32 (V9-9)
EX.INV.OUT = 754.31 (TO BE ABANDONED)
PROP.INV.OUT = 754.22
EX.TOP = 758.12
PROP.TOP = 757.69
ADJUST TO GRADE,LOWER 0.43'
1-STD.IS-1 REQ'D.

VI0-18 — VI0-17
32'-24" STORM SEWER PIPE REQ'D.(1' COVER)
(MINIMUM COVER REQ'D)
INV.(IN) 754.22 INV.(OUT) 753.90

VI0-5
1 STD.DI-1 REQ'D.
H=5.5' INV.752.35

VI0-5 — VI0-4
17'-15" STORM SEWER PIPE REQ'D.(5' COVER)
INV.(IN) 752.35 INV.(OUT) 752.00

VI0-4
1 STD.DI-1 REQ'D.
H=4.7' INV.751.90
1-STD.IS-1 REQ'D.

VI0-4 — VI0-28
14'-15" STORM SEWER PIPE REQ'D.(5' COVER)
INV.(IN) 751.90 INV.(OUT) 751.64

VI0-28
1 STD.DI-2B REQ'D
L=4', H=6.4' INV.= 751.54
STD.ST-1 REQ'D.
1-STD.IS-1 REQ'D.

VI0-28 — VI0-6
56'-15" STORM SEWER PIPE REQ'D.(7' COVER)
INV.(IN) 751.54 INV.(OUT) 750.00

VI0-6
1 STD.DI-3CC REQ'D.
L=12', H=8.1' INV.749.90
STD.ST-1 REQ'D.
STD.IS-1 REQ'D.

VI0-6 — VI0-19
34'-15" STORM SEWER PIPE REQ'D.(9' COVER)
INV.(IN) 749.90 INV.(OUT) 748.26

VI0-19
11.6 LF STD.7' MH-2 REQ'D.
1 STD.MH-1 FRAME & COVER REQ'D.
ROTATE TOP TO CENTER OF TRAVEL LANE
INV.= 746.04
STD.IS-1 REQ'D.
STD.ST-1 REQ'D.
STD.SL-1 REQ'D.

VI0-19 — VI0-20
96'-42" STORM SEWER PIPE REQ'D.(9' COVER)
INV.(IN) 746.04 INV.(OUT) 745.57
BEDDING REQUIREMENT "C"
VDOT PB-1 - FOUNDATION SOFT,YIELDING,OR OTHERWISE UNSUITABLE MATL.
82 TONS BEDDING MATERIAL AGGREGATE #25 OR #26

VI0-20
12.3 LF STD.7' MH-2 REQ'D.
1 STD.MH-1 FRAME & COVER REQ'D.
ROTATE TOP TO CENTER OF TRAVEL LANE
INV.= 747.47
STD.IS-1 REQ'D.
STD.ST-1 REQ'D.
STD.SL-1 REQ'D.

VI0-20 — VI0-12
123'-42" STORM SEWER PIPE REQ'D.(11' COVER)
INV.(IN) 747.47 INV.(OUT) 744.86
BEDDING REQUIREMENT "C"
VDOT PB-1 - FNDN.SOFT,YIELDING,OR OTHERWISE UNSUITABLE MATL.
106 TONS BEDDING MATERIAL AGGREGATE #25 OR #26

VI0-21
10.5 LF STD.6' MH-2 REQ'D.
1 STD.MH-1 FRAME & COVER REQ'D.
ROTATE TOP TO CENTER OF TRAVEL LANE
INV.= 746.81
STD.IS-1 REQ'D., STD.ST-1 REQ'D.
1-1/2" STEEL PLATE REQ'D.

VI0-27
1 STD.DI-3B REQ'D
L=4', H=8.5' INV.= 749.50
STD.ST-1 REQ'D.

VI0-27 — VI0-21
32'-15" STORM SEWER PIPE REQ'D.(8' COVER)
INV.(IN) 749.50 INV.(OUT) 749.00

VI0-21 — VI0-19
134'-36" STORM SEWER PIPE REQ'D.(9' COVER)
INV.(IN) 746.81 INV.(OUT) 746.14
BEDDING REQUIREMENT "C"
VDOT PB-1 - FOUNDATION SOFT,YIELDING,OR OTHERWISE UNSUITABLE MATL.
115 TONS BEDDING MATERIAL AGGREGATE #25 OR #26

VI0-22
(EX.STR.54) MODIFY EXISTING DI TO MANHOLE
1 STD.MH-1 FRAME & COVER REQ'D.
EX.INV.IN = 755.17 (55) - TO BE ABANDONED
EX.INV.IN = 755.22 (58)
EX.INV.IN = 755.32 (56)
EX.INV.OUT = 755.15
PROP.INV.OUT = 749.68
EX.T.C.= 756.82
PROP.TOP = 756.45
ADJUST TO GRADE,LOWER 0.37'
1-1/2" STEEL PLATE REQ'D.
1-STD.IS-1 REQ'D.

VI0-22 — VI0-2
5'-18" STORM SEWER PIPE REQ'D.(7' COVER)
INV.(IN) 749.68 INV.(OUT) 749.58

VI0-29
1 STD.DI-3B REQ'D.
L=12', H=4.1' INV.753.00
STD.ST-1 REQ'D.

VI0-29 — VI0-22
12'-15" STORM SEWER PIPE REQ'D.(3' COVER)
INV.(IN) 753.00 INV.(OUT) 752.70

VI0-23
1 STD.DI-3B REQ'D.
L=4', H=4.5' INV.754.61

VI0-23 — VI0-26
34'-15" STORM SEWER PIPE REQ'D.(5' COVER)
INV.(IN) 754.61 INV.(OUT) 753.26

VI0-26
1 STD.DI-3C REQ'D.
L=6', H=6.0' INV.753.16
STD.IS-1 REQ'D.

VI0-26 — VI4-1
67'-15" STORM SEWER PIPE REQ'D.(8' COVER)
INV.(IN) 753.16 INV.(OUT) 750.57

VI0-24
1 STD.DI-2B REQ'D.
L=8', H=4.0' INV.755.64

VI0-24 — VI0-25
41'-15" STORM SEWER PIPE REQ'D.(4' COVER)
INV.(IN) 755.64 INV.(OUT) 754.21

VI0-25
1 STD.DI-2B REQ'D.
L=6', H=6.3' INV.754.11
STD.IS-1 REQ'D.

VI0-25 — VI0-26
14'-15" STORM SEWER PIPE REQ'D.(5' COVER)
INV.(IN) 754.11 INV.(OUT) 753.36

Sheet 11

VII-1
1 - MODIFIED DI-1 (SHALLOW SD-5)
L=5.52', 2 GRATES, H=3.9' INV.756.31
ACCEPT EX.13"x17" CMP PIPE,NO EX.INFO (CON.TO VERIFY)
STD.IS-1 REQ'D.
STD.ST-1 REQ'D.

VII-1 — VII-10
77'-24" STORM SEWER PIPE REQ'D.(1' COVER)
(LESS THAN MINIMUM COVER)
INV.(IN) 756.31 INV.(OUT) 756.08

VII-2
1 - MODIFIED DI-1 (SHALLOW SD-5)
L=8.28', 3 GRATES, H=2.7' INV.756.95

VII-2 — VII-5
97'-15" STORM SEWER PIPE REQ'D.(1' COVER)
(LESS THAN MINIMUM COVER)
INV.(IN) 756.95 INV.(OUT) 756.66

VII-6
1 - MODIFIED DI-1 (SHALLOW SD-5)
L=5.52', 2 GRATES, H=3.5' INV.= 757.40

VII-6 — VII-4
44'-15" STORM SEWER PIPE REQ'D.(2' COVER)
INV.(IN) 757.40 INV.(OUT) 756.95

VII-4
1 STD.DI-2B REQ'D
L=4', H=3.9' INV.= 756.85

VII-4 — VII-3
5'-15" STORM SEWER PIPE REQ'D.(2' COVER)
INV.(IN) 756.85 INV.(OUT) 756.82

VII-3
(EX.STR.36) MODIFY EX.MANHOLE
PROP.INV.OUT = 756.74
EX.TOP = 759.37
PROP.TOP = 760.38
EX INV.IN = 756.77 (37)
EX.INV.IN= 756.82 (39)
STD.IS-1 REQ'D.
ADJUST TO GRADE,RAISE 1.01'

VII-5
1 - MODIFIED DI-1 (SHALLOW SD-5)
1-STD.IS-1 REQ'D
L=5.52', 2 GRATES, H=3.3' INV.756.66

VII-5 — VII-8
96'-18" STORM SEWER PIPE REQ'D.(1' COVER)
(LESS THAN MINIMUM COVER)
INV.(IN) 756.66 INV.(OUT) 756.37

VII-8
1 - MODIFIED DI-1 (SHALLOW SD-5)
1-STD.IS-1 REQ'D
L=8.28', 2 GRATES, H=3.9' INV.756.37

VII-7
1 STD.15" ES-1 OR ES-2 REQ'D
INV.758.03

VII-7 — VII-8
5'-15" STORM SEWER PIPE REQ'D.(1' COVER)
(LESS THAN MINIMUM COVER)
INV.(IN) 758.03 INV.(OUT) 757.94

VII-8 — VII-1
20'-18" STORM SEWER PIPE REQ'D.(1' COVER)
(LESS THAN MINIMUM COVER)
INV.(IN) 756.37 INV.(OUT) 756.31

VII-10
1 STD.DI-3B REQ'D.
L=6', H=5.6' INV.754.71
STD.IS-1 REQ'D.
STD.ST-1 REQ'D.

VII-10 — VII-11
53'-24" STORM SEWER PIPE REQ'D.(4' COVER)
INV.(IN) 754.71 INV.(OUT) 754.50

VII-11
(EX STR.35) MODIFY EXISTING MANHOLE
ACCEPT 24" STORM PIPE,INV.= 754.50
EX.INV.IN = 755.45
EX.INV.OUT = 754.40
EX.TOP = 760.02
PROP.TOP = 760.48
ADJUST TO GRADE,RAISE 0.46'
1-STD.IS-1 REQ'D.

VII-13
1 STD.DI-2C REQ'D.
L=12', H=4.0' INV.757.00
STD.ST-1 REQ'D.

VII-13 — VII-1
23'-15" STORM SEWER PIPE REQ'D.(4' COVER)
INV.(IN) 757.00 INV.(OUT) 756.20

COMMONWEALTH OF VIRGINIA
BRIAN P. KOMAR
Lic. No. 045169
PROFESSIONAL ENGINEER

Brian Komar
2020.02.14 10:54:23-05'00'
Rinker Design Assoc., P.C.
Fredericksburg, Virginia
DRAINAGE ENGINEER

REVISED	STATE	STATE ROUTE	STATE PROJECT	SHEET NO.
	VA.	11	U000-138-R04 C501	17(2)

DESIGN FEATURES RELATING TO CONSTRUCTION OR TO REGULATION AND CONTROL OF TRAFFIC MAY BE SUBJECT TO CHANGE AS DEEMED NECESSARY BY THE DEPARTMENT

PROJECT	SHEET NO.
U000-138-R04	17(2)

PROJECT MANAGER Perry Eisenach, P.E. - City of Winchester (540) 667-2085
SURVEYED BY, DATE Sidney Thomas, L.S. - Rinker Design Associates (703) 368-7373, October 2014
DESIGN BY John A. Glomett, P.E. - Rinker Design Associates (703) 334-0060
SUBSURFACE UTILITY BY, DATE Matthew Bansiem - Mid Atlantic Utility Locating (703) 378-0100, August 2014

Office Locations
Corporate Headquarters: 2101 Parkway Boulevard, Suite 100, Vienna, VA 22182, Phone: (703) 334-0060, Fax: (703) 573-5117
Northern Virginia: 107 Mill Street, Suite 101, Winchester, VA 22601, Phone: (540) 667-2085, Fax: (540) 667-2086
Southern Virginia: 2000 Wilson Boulevard, Suite 100, Arlington, VA 22201, Phone: (703) 522-4700, Fax: (703) 522-4700

Rinker Design Associates, P.C.
Civil Engineering • Surveying • Environmental
Transportation • Land Development
Right of Way Services
SINCE INCORPORATED 1988

REVISED	STATE	ROUTE	PROJECT	SHEET NO.
	VA.	11	U000-138-R04 C501	17(2A)

COMMONWEALTH OF VIRGINIA
BRIAN P. KOMAR
Lic. No. 045169
PROFESSIONAL ENGINEER

Brian Komar
2020.02.14 10:54:03-05'00'

Rinker Design Assoc., P.C.
Fredericksburg, Virginia
DRAINAGE ENGINEER

DESIGN FEATURES RELATING TO CONSTRUCTION OR TO REGULATION AND CONTROL OF TRAFFIC MAY BE SUBJECT TO CHANGE AS DEEMED NECESSARY BY THE DEPARTMENT

V11-9
7.7 LF STD 4' MH-1 OR MH-2 REQ'D.
1 STD.MH-1 FRAME & COVER REQ'D.
ROTATE TOP TO CENTER OF TRAVEL LANE
INV.= 753.00
STD.IS-1 REQ'D.
STD.ST-1 REQ'D.

V11-9 — V11-12
44'-24" STORM SEWER PIPE REQ'D.(6' COVER)
INV.(IN) 753.00 INV.(OUT) 751.90

V11-12
6.5 LF STD.4' MH-1 OR MH-2 REQ'D.
1 STD.MH-1 FRAME & COVER REQ'D.
ROTATE TOP TO CENTER OF TRAVEL LANE
INV.= 751.74
STD.IS-1 REQ'D.
STD.ST-1 REQ'D.

V11-12 — H3-6
17'-24" STORM SEWER PIPE REQ'D.(5' COVER)
INV.(IN) 751.74 INV.(OUT) 751.60

H3-6
EX 25 (MODIFY EX.MH)
EX.TOP = 758.90
PROP.TOP = 759.25
ADJUST TO GRADE, RAISE 0.35'
ADD DI-2E, L=6'
EX.INV.(IN) = 751.66 (FROM EX H7)
EX.INV.(IN) = 751.60 (FROM EX 26) - REPLACE
EX.15"PIPE FROM V11-12 TO H3-6 WITH 24" PIPE
PROP INV IN (FROM V11-12) = 751.60
EX.INV.(OUT) = 751.20 (30" RCP)

Sheet 12

V12-15 — V11-9
138'-24" STORM SEWER PIPE REQ'D.(6' COVER)
INV.(IN) 755.71 INV.(OUT) 753.10

V12-1
(EX.STR.26) MODIFY EXISTING DI STRUCTURE
EX.INV.IN = 755.61
EX.INV.OUT = 752.99
PROP.INV.IN = 753.09 (FROM V12-8)
EX.TOP = 760.99
PROP.TOP = 761.49
ADJUST TO GRADE, RAISE 0.50'
1-STD.IS-1 REQ'D.

V12-2
1-HANSON SHALLOW MH REQ'D.
1-STD DI-1 TOP REQ'D
H=3.0' INV.757.49

V12-2 — V12-14
11'-15" STORM SEWER PIPE REQ'D.(2' COVER)
INV.(IN) 757.49 INV.(OUT) 757.37

V12-14
3.5 LF STD.HANSON SHALLOW MH REQ'D.
1 STD.MH-1 FRAME & COVER REQ'D.
ROTATE TOP TO CENTER OF TRAVEL LANE
INV.= 757.27
STD.IS-1 REQ'D., STD.ST-1 REQ'D.

V12-3
1 STD.DI-2C REQ'D.
L=10', H=4.0' INV.757.51
STD.ST-1 REQ'D.

V12-3 — V12-14
19'-15" STORM SEWER PIPE REQ'D.(3' COVER)
INV.(IN) 757.51 INV.(OUT) 757.31

V12-5
1 STD.DI-2B REQ'D.
1-STD.6' DOGHOUSE MANHOLE REQ'D.
L=4', H=5.5' INV.758.52 (ACCEPT EX.15" PIPE)
STD.ST-1 REQ'D.

V12-5 — V12-9
12'-15" STORM SEWER PIPE REQ'D.(4' COVER)
INV.(IN) 758.52 INV.(OUT) 758.46

V12-6
1 STD.DI-2B REQ'D.
L=4', H=5.9' INV.755.60
STD.ST-1 REQ'D.

V12-6 — V12-7
160'-15" STORM SEWER PIPE REQ'D.(6' COVER)
INV.(IN) 755.60 INV.(OUT) 754.88

V12-7
1 STD.DI-2C REQ'D.
L=6', H=8.2' INV.754.78
STD.ST-1 REQ'D.

V12-7 — V12-8
18'-15" STORM SEWER PIPE REQ'D.(8' COVER)
INV.(IN) 754.78 INV.(OUT) 753.97

V12-8
1 STD.DI-3CC REQ'D.
L=6', H=8.7' INV.753.87
STD.ST-1 REQ'D.

V12-8 — V12-1
155'-15" STORM SEWER PIPE REQ'D.(8' COVER)
INV.(IN) 753.87 INV.(OUT) 753.09

V12-9
1 STD.DI-1 REQ'D.
H=3.8' INV.758.36
STD.IS-1 REQ'D.

V12-9 — V12-12
16'-15" STORM SEWER PIPE REQ'D.(3' COVER)
INV.(IN) 758.36 INV.(OUT) 758.28

V12-12
3.4 LF HANSON SHALLOW MH REQ'D.
1 STD.MH-1 FRAME & COVER REQ'D.
ROTATE TOP TO CENTER OF TRAVEL LANE
INV.= 758.18
STD.IS-1 REQ'D.
STD.ST-1 REQ'D.

V12-11
1 STD.DI-2B REQ'D.
L=10', H=4.3' INV.758.57
STD.ST-1 REQ'D.

V12-11 — V12-12
58'-15" STORM SEWER PIPE REQ'D.(3' COVER)
INV.(IN) 758.57 INV.(OUT) 758.28

V12-12 — V12-4
54'-18" STORM SEWER PIPE REQ'D.(3' COVER)
INV.(IN) 758.18 INV.(OUT) 757.92

V12-4
1 - STD DI-2B REQ'D.
L=4', H=4.3' INV.757.82
STD.IS-1 REQ'D.

V12-4 — V12-13
62'-18" STORM SEWER PIPE REQ'D.(2' COVER)
INV.(IN) 757.82 INV.(OUT) 757.51

V12-13
1 STD.DI-2B REQ'D.
L=4', H=4.5' INV.757.41
STD.ST-1 REQ'D.
STD.IS-1 REQ'D.

V12-13 — V12-14
21'-18" STORM SEWER PIPE REQ'D.(3' COVER)
INV.(IN) 757.41 INV.(OUT) 757.31

V12-15
5.2 LF DOGHOUSE MH REQ'D.
1 STD.MH-1 FRAME & COVER REQ'D.
ROTATE TOP TO CENTER OF TRAVEL LANE
INV.= 755.71
STD.IS-1 REQ'D.
STD.ST-1 REQ'D.

V12-10
1 STD.DI-2B REQ'D.
L=4', H=5.2' INV.756.24
STD.ST-1 REQ'D.

V12-10 — V12-6
119'-15" STORM SEWER PIPE REQ'D.(6' COVER)
INV.(IN) 756.24 INV.(OUT) 755.70

Sheet 13

V13-2
1 - MODIFIED DI-1 (SHALLOW SD-5)
L=5.52', H=2.5' INV.757.29

V13-2 — V12-10
213'-15" STORM SEWER PIPE REQ'D.(1' COVER)
INV.(IN) 757.29 INV.(OUT) 756.34
PROP.PIPE LESS THAN 2' MIN.COVER

Sheet 14

V14-1
1 STD.DI-3BB REQ'D.
L=4', H=14.9' INV.744.34
STD.IS-1 REQ'D.
STD.ST-1 REQ'D.
STD.SL-1 REQ'D.

V14-1 — V14-2
41'-15" STORM SEWER PIPE REQ'D.(15' COVER)
INV.(IN) 744.34 INV.(OUT) 742.91

V14-2
1 STD.DI-4BB REQ'D.
L=6', H=16.6' INV.742.81
STD.IS-1 REQ'D.
STD.ST-1 REQ'D.
STD.SL-1 REQ'D.

V14-2 — V14-3
272'-42" STORM SEWER PIPE REQ'D.(13' COVER)
INV.(IN) 742.81 INV.(OUT) 741.49
BEDDING REQUIREMENT "A"
VDOT PB-1 - NORMAL EARTH FOUNDATION
158 TONS BEDDING MATERIAL AGGREGATE #25 OR #26

V14-3
1 STD.DI-4EE REQ'D.
L=6', H=14.0' INV.741.39
STD.IS-1 REQ'D.
STD.ST-1 REQ'D.
STD.SL-1 REQ'D.

V14-3 — V14-4
34'-42" STORM SEWER PIPE REQ'D.(10' COVER)
INV.(IN) 741.39 INV.(OUT) 741.22
BEDDING REQUIREMENT "B"
VDOT PB-1 - ROCK FOUNDATION
25 TONS BEDDING MATERIAL AGGREGATE #25 OR #26

V14-4
1 STD.DI-4EE REQ'D.
L=6', H=14.3' INV.741.12
STD.IS-1 REQ'D.
STD.ST-1 REQ'D.
STD.SL-1 REQ'D.

V14-4 — V14-5
119'-42" STORM SEWER PIPE REQ'D.(10' COVER)
INV.(IN) 741.12 INV.(OUT) 740.53
BEDDING REQUIREMENT "B"
VDOT PB-1 - ROCK FOUNDATION
86 TONS BEDDING MATERIAL AGGREGATE #25 OR #26

V14-5
12.0 LF STD.5' MH-2 REQ'D.
1 STD.MH-1 FRAME & COVER REQ'D.
INV.= 740.43
STD.ST-1 REQ'D.
STD.SL-1 REQ'D.
STD.IS-1 REQ'D.

V14-5 — V14-6
103'-42" STORM SEWER PIPE REQ'D.(9' COVER)
INV.(IN) 740.43 INV.(OUT) 739.81
BEDDING REQUIREMENT "A"
VDOT PB-1 - NORMAL EARTH FOUNDATION
61 TONS BEDDING MATERIAL AGGREGATE #25 OR #26

Sheet 15

V14-6
1 STD.DI-4BB REQ'D.
L=6', H=11.1' INV. 739.71
STD.IS-1 REQ'D.
STD.ST-1 REQ'D.

V14-6 — V15-10
54'-42" STORM SEWER PIPE REQ'D.(6' COVER)
INV.(IN) 739.71 INV.(OUT) 739.47
BEDDING REQUIREMENT "A"
VDOT PB-1 - NORMAL EARTH FOUNDATION
95 CY MINOR STRUCTURE EXCAVATION
32 TONS MATERIAL AGGREGATE #25 OR #26

V14-7
1 STD.DI-3B REQ'D.
L=6', H=7.4' INV.743.52
STD.ST-1 REQ'D.

V14-7 — V14-6
36' -15" STORM SEWER PIPE REQ'D.(7' COVER)
INV.(IN) 743.52 INV.(OUT) 742.74

V15-1
1 STD.DI-4BB REQ'D.
L=6', H= 8.3' INV.= 738.73
STD.IS-1 REQ'D.
STD.ST-1 REQ'D.

V15-1 — V15-2
125'-42" STORM SEWER PIPE REQ'D.(5' COVER)
INV.(IN) 738.73 INV.(OUT) 738.11
BEDDING REQUIREMENT "A"
VDOT PB-1 - NORMAL EARTH FOUNDATION
74 TONS MATERIAL AGGREGATE #25 OR #26

V15-2
1 STD.DI-4E REQ'D.
L=6', H=6.9' INV.738.01
STD.ST-1 REQ'D.
STD.IS-1 REQ'D.

V15-2 — V15-3
108'-42" STORM SEWER PIPE REQ'D.(3' COVER)
INV.(IN) 738.01 INV.(OUT) 737.40
BEDDING REQUIREMENT "A"
VDOT PB-1 - NORMAL EARTH FOUNDATION
64 TONS MATERIAL AGGREGATE #25 OR #26

V15-3
6.4 LF STD.5' MH-2 REQ'D.
1 STD.MH-1 FRAME & COVER REQ'D.
INV.= 736.83
STD.IS-1 REQ'D.
STD.ST-1 REQ'D.

V15-3 — V15-4
111'-42" STORM SEWER PIPE REQ'D.(4' COVER)
INV.(IN) 736.83 INV.(OUT) 736.00
BEDDING REQUIREMENT "A"
VDOT PB-1 - NORMAL EARTH FOUNDATION
66 TONS MATERIAL AGGREGATE #25 OR #26

V15-4
1 STD.DI-4E REQ'D.
L=6', H=7.4' INV.735.63
STD.IS-1 REQ'D.
STD.ST-1 REQ'D.

V15-4 — V15-5
216'-42" STORM SEWER PIPE REQ'D.(5' COVER)
INV.(IN) 735.63 INV.(OUT) 734.20
BEDDING REQUIREMENT "A"
VDOT PB-1 - NORMAL EARTH FOUNDATION
129 TONS BEDDING MATERIAL AGGREGATE #25 OR #26

V15-6
1 STD.DI-3B REQ'D.
L=6', H=4.7' INV.742.20
STD.ST-1 REQ'D.

V15-6 — V15-1
34'-15" STORM SEWER PIPE REQ'D.(5' COVER)
INV.(IN) 742.20 INV.(OUT) 738.83

V15-7
1 STD.DI-3B REQ'D.
L=6', H=4.5' INV.739.04
STD.ST-1 REQ'D.

V15-7 — V15-3
42'-15" STORM SEWER PIPE REQ'D.(4' COVER)
INV.(IN) 739.04 INV.(OUT) 738.83

V15-8
1 STD.DI-3B REQ'D.
L=4', H=4.8' INV.738.10
STD.ST-1 REQ'D.

V15-8 — V15-4
35'-15" STORM SEWER PIPE REQ'D.(4' COVER)
INV.(IN) 738.10 INV.(OUT) 737.65

V15-10
91 LF STD.5' MH-2 REQ'D.
1 STD.MH-1 FRAME & COVER REQ'D.
INV.= 739.37
STD.ST-1 REQ'D.
STD.IS-1 REQ'D.

V15-10 — V15-1
119'-42" STORM SEWER PIPE REQ'D.(4' COVER)
INV.(IN) 738.10 INV.(OUT) 737.65
BEDDING REQUIREMENT "A"
VDOT PB-1 - NORMAL EARTH FOUNDATION
212 CY MINOR STRUCTURE EXCAVATION
71 TONS MATERIAL AGGREGATE #25 OR #26

PROJECT MANAGER Perry Eisenach, P.E. - City of Winchester (540) 667-2085
SURVEYED BY, DATE Sidney Thomas, L.S. - Rinker Design Associates (703) 368-7373, October 2014
DESIGN BY John A. Glometti, P.E. - Rinker Design Associates (703) 334-0060
SUBSURFACE UTILITY BY, DATE Matthew Bansiem - Mid Atlantic Utility Locating (703) 378-0100, August 2014

Office Locations
Corporate Headquarters
8405 Greenwood Place
Springfield, VA 22150
Phone: (703) 334-0060
Fax: (703) 451-0344

Northern Virginia Office
4417 Mount Vernon Drive
Suite 100
Alexandria, VA 22305
Phone: (703) 548-8860
Fax: (703) 519-0224

Rinker Design Associates, P.C.
Civil Engineering • Surveying • Environmental
Transportation • Land Development
Right-of-Way Services

8405 GREENWOOD PLACE
SPRINGFIELD, VA 22150

REVISED	STATE	STATE ROUTE	STATE PROJECT	SHEET NO.
	VA.	11	U000-138-R04 C501	17(2B)

COMMONWEALTH OF VIRGINIA
BRIAN P. KOMAR
Lic. No. 045169
PROFESSIONAL ENGINEER

Brian Komar
2020.02.14 10:53:42-05'00'

Rinker Design Assoc., P.C.
Fredericksburg, Virginia
DRAINAGE ENGINEER

DESIGN FEATURES RELATING TO CONSTRUCTION OR TO REGULATION AND CONTROL OF TRAFFIC MAY BE SUBJECT TO CHANGE AS DEEMED NECESSARY BY THE DEPARTMENT

Sheet 16

V15-5: 1 STD.DI-4BB REQ'D.
L=6', H=8.1' INV.=733.37
STD.IS-1 REQ'D.
STD.ST-1 REQ'D.

V15-5 – V16-1: 301'-42" STORM SEWER PIPE REQ'D.(6' COVER)
INV.(IN) 733.37 INV.(OUT) 731.20
BEDDING REQUIREMENT "B"
VDOT PB-1 - ROCK FOUNDATION
219 TONS BEDDING MATERIAL AGGREGATE #25 OR #26

V15-9: 1 STD.DI-2B REQ'D.
L=6', H=3.8' INV.=737.97

V15-9 – V15-5: 30'-15" STORM SEWER PIPE REQ'D.(4' COVER)
INV.(IN) 737.97 INV.(OUT) 736.44

V16-1: 1 STD.DI-2EE REQ'D.
L=6', H=10.0' INV.=730.26
STD.IS-1 REQ'D.
STD.ST-1 REQ'D.
1-1/2" STEEL PLATE REQ'D.

V16-1 – V16-4: 233'-42" STORM SEWER PIPE REQ'D.(7' COVER)
INV.(IN) 730.26 INV.(OUT) 728.55
BEDDING REQUIREMENT "B"
VDOT PB-1 - ROCK FOUNDATION
169 TONS BEDDING MATERIAL AGGREGATE #25 OR #26

V16-2: 1 STD.DI-3B REQ'D.
L=6', H=4.1' INV.=736.00
STD.ST-1 REQ'D.

V16-2 – V16-1: 26'-15" STORM SEWER PIPE REQ'D.(3' COVER)
INV.(IN) 736.00 INV.(OUT) 735.74

GEOTECHNICAL BEDDING REQUIREMENTS
(PER VALLEY AVENUE GEOTECHNICAL REPORT DATED MARCH 21, 2018)

(A) NO SPECIAL RECOMMENDATIONS ARE NEEDED AT THIS LOCATION. THE BEDDING SHOULD BE PLACED IN ACCORDANCE WITH THE REQUIREMENTS OF VDOT STANDARD DETAIL PB-1 AND THE APPLICABLE SECTIONS OF VDOT ROAD AND BRIDGE SPECIFICATIONS. ANY UNSUITABLE SUBGRADE SOILS FOUND DURING CONSTRUCTION MUST BE UNDERCUT AND REPLACED WITH COMPACTED VDOT NO.25 OR 26 BEDDING MATERIALS IN ACCORDANCE WITH THE VDOT DRAINAGE PIPE AND CULVERT BACKFILLING STANDARDS.

(B) EXCAVATION OF WEATHERED ROCK, BOULDER OR UNWEATHERED BED ROCK WILL BE REQUIRED TO ACHIEVE DESIGN INVERT ELEVATION. THE ROCK SHOULD BE UNDERCUT BELOW THE PIPE INVERT A DEPTH OF 1/2" PER FOOT OF DEPTH AS MEASURED FROM FINISHED GRADE TO THE TOP OF THE PIPE. WITH A MINIMUM DEPTH OF 8" AND MAXIMUM DEPTH OF 24". THE BEDDING SHOULD BE PLACED IN ACCORDANCE WITH THE REQUIREMENTS OF VDOTS TANDARD DETAIL PB-1 AND THE APPLICABLE SECTIONS OF VDOT ROAD AND BRIDGE SPECIFICATIONS.

(C) UNDERCUTTING OF SOFT SUBGRADE SOILS BELOW THE PROPOSED INVERT ELEVATION IS ANTICIPATED. THE UNDERCUT SHOULD BE REPLACED WITH COMPACTED VDOT NO.25 OR 26 BEDDING MATERIALS IN ACCORDANCE WITH THE VDOT DRAINAGE PIPE AND CULVERT BACKFILLING STANDARDS.

(GENERAL) THE ESTIMATED MINIMUM UNDERCUT DEPTHS LISTED IN TABLE 6-4 OF THE GEOTECHNICAL REPORT ARE BASED ON THE SUBSURFACE CONDITIONS INTERPRETED FROM THE BORINGS AND SHOULD BE CONSIDERED APPROXIMATE. THE ACTUAL SUBSURFACE CONDITIONS BETWEEN BORINGS COULD BE SIGNIFICANTLY DIFFERENT THAN THOSE ENCOUNTERED IN THE BORINGS. THE ACTUAL UNDERCUT DEPTHS AND EXTENT SHOULD BE DETERMINED BY THE GEOTECHNICAL ENGINEER OF RECORD OR AN AUTHORIZED REPRESENTATIVE AT THE TIME OF CONSTRUCTION.

Circular Manholes / Vertical Structures

Standard Dimensions

Min. Manhole I.D.	Pipe Size		Manhole w/8" Mitr & w/4" Adj. Ring	Manhole w/ IC-2
48"	2"	B-Wall	3.15'	2.00'
		C-Wall	3.2''	2.13'
	15"	B-Wall	3.43'	2.30'
		C-Wall	3.48'	2.40'
	18"	B-Wall	3.68'	2.50'
		C-Wall	3.75'	2.57'
	21"	B-Wall	3.06'	2.88'
		C Wall	4.02'	2.94'
	24"	B-Wall	4.23'	3.15'
		C-Wall	4.29'	3.2''
	27"	B-Wall	4.50'	3.42'
		C-Wall	4.58'	3.48'
	30"	B-Wall	4.77'	3.60'
		C-Wall	4.83'	3.75'
60"	33"	B-Wall	5.2''	4.13'
		C-Wall	5.2''	4.19'
	36"	B-Wall	5.48'	4.40'
		C Wall	5.54'	4.46'
	42"	C-Wall	6.08'	5.00'
72"	45"	C-Wall	6.65'	5.56'
84"	54"	C Wall	7.10'	6.10'
	60"	C Wall	7.73'	6.65'
96"	66"	C-Wall	8.27'	7.19'
	72"	C-Wall	8.8''	7.73'
108"	78"	C-Wall	9.38'	8.29'
	84"	C-Wall	9.92'	8.8''
120"	90"	B-Wall	10.54'	9.46'
	96"	B-Wall	11.08'	10.00'

Note:
(1.) Manhole sections manufactured according to ASTM C478 T&G or rubber gasket joints conforming to ASTM C443. Manhole steps to be polypropylene encapsulated steel. See also precast concrete detail reference page 8.25.
(2.) Dimensions subject to permissible variation of ASTM C478
(3.) Precast monolithic may be considered for shorter structures.

Minimum Height Chart for Precast Manhole Structures | VA | 8.3 | 03-15-06 | Hanson

Circular Manholes / Vertical Structures

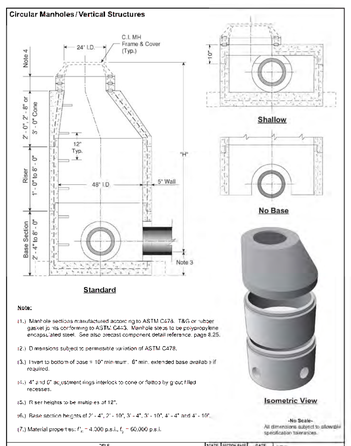

Note:
(1.) Manhole sections manufactured according to ASTM C478. T&G or rubber gasket joints conforming to ASTM C443. Manhole steps to be polypropylene encapsulated steel. See also precast component detail reference page 8.25.
(2.) Dimensions subject to permissible variation of ASTM C478.
(3.) Invert to bottom of base = 10" min-reqm'. 6" min. extended base available if required.
(4.) 4" and 6" adjustment rings interlock to cone or flat top by grout filled recesses.
(5.) Riser heights to be multiples of 12".
(6.) Base section heights of 2'-4", 2'-10", 3'-4", 3'-10", 4'-4" and 4'-10".
(7.) Material properties: f'_c = 4,000 p.s.i., f_y = 60,000 p.s.i.

-No Scale-
All dimensions subject to allowable specification tolerances.

Precast 48" Manhole Assembly Detail | VA | 8.8 | 03-15-06 | Hanson

CITY OF WINCHESTER, VA
DEPARTMENT OF PUBLIC UTILITIES

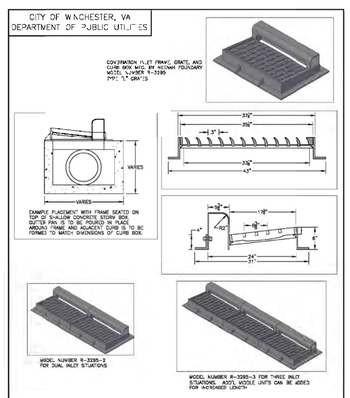

STANDARD DETAIL NO.	MODIFIED DI-1 (SHALLOW) SCALE: NONE	DATE: 4/12
SD – 5		

Reinforced Concrete Pipe

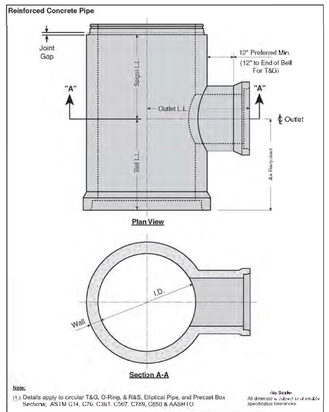

Note:
(1.) Details apply to circular T&G, O-Ring, & R&S, Elliptical Pipe, and Precast Box Sections. ASTM C14, C76, C361, C507, C789, C850 & AASHTO.

-No Scale-
All dimensions subject to allowable specification tolerances.

Typical Fabricated Concentric Concrete Tee | VA | 8.5 | 03-15-06 | Hanson

PROJECT	SHEET NO.
U000-138-R04	17(2B)

2/14/2020
9:07:26 AM

d1030130117(3).dgn
Plotted By: mbeales

PROJECT MANAGER Perry Eisenach, P.E. - City of Winchester (540).667-2085
SURVEYED BY, DATE Sidney Thomas, L.S. - Rinker Design Associates (703).368-7373, October 2014
DESIGN BY John A. Glomelli, P.E. - Rinker Design Associates (703) 334-0060
SUBSURFACE UTILITY BY, DATE Matthew Banslem - Mid Atlantic Utility Locating (703).378-0100, August 2014

Rinker Design Associates, P.C.
Civil Engineering • Surveying • Environmental Transportation • Land Development • Right of Way Services
Office Locations
Northern Virginia: 4651 Daly Drive, Suite 100, Chantilly, VA 20151, Phone: (703) 378-0100, Fax: (703) 378-0101
Richmond: 4914 Fitzhugh Avenue, Suite 106, Richmond, VA 23230, Phone: (804) 355-0800, Fax: (804) 355-0801
Fredericksburg: 2001 Mary Lycan Drive, Suite 101, Fredericksburg, VA 22401, Phone: (540) 373-8300, Fax: (540) 373-8311

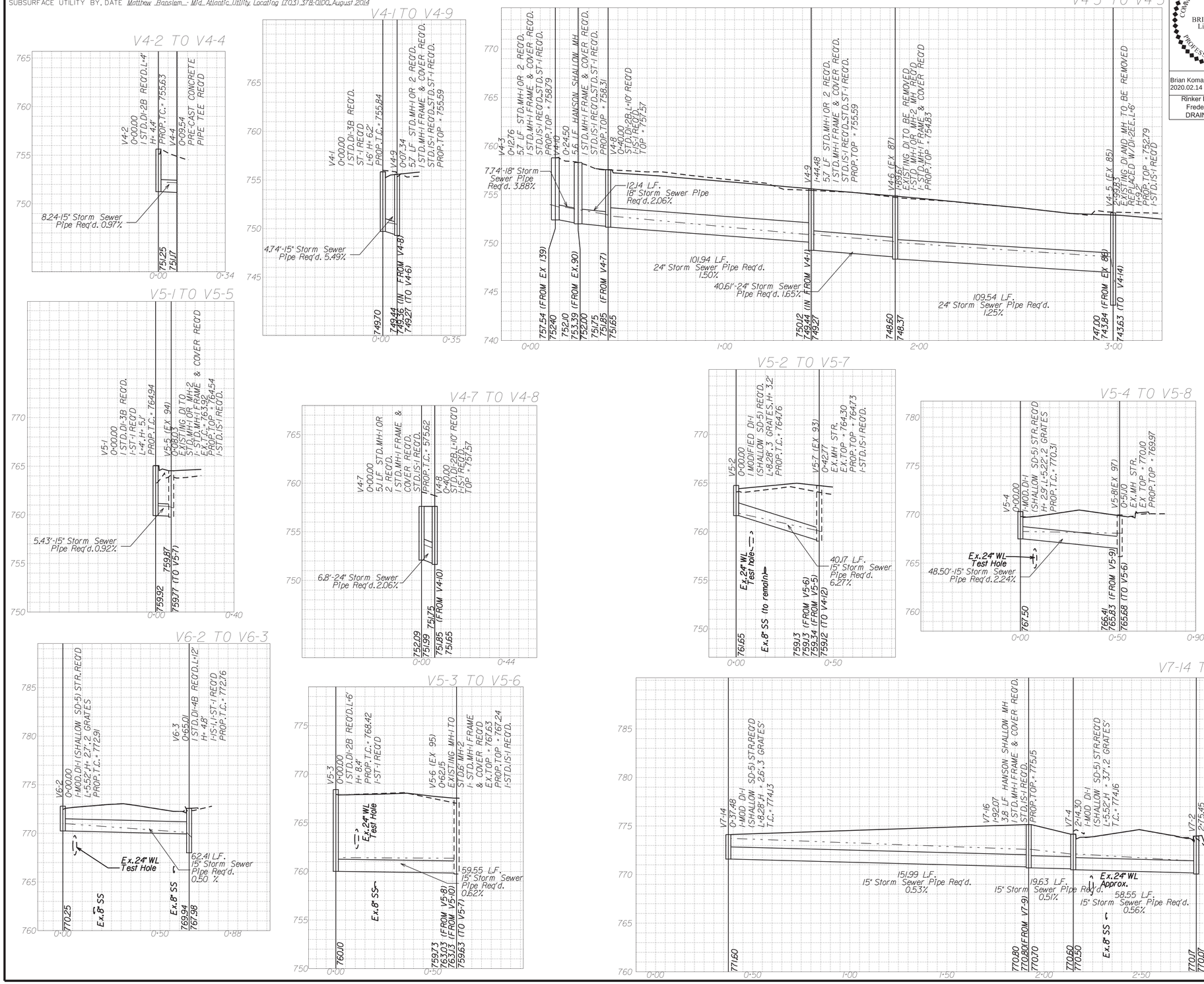

REVISED	STATE	ROUTE	PROJECT	SHEET NO.
	VA.	11	U000-138-R04 C501	17(3)

COMMONWEALTH OF VIRGINIA
BRIAN P. KOMAR
Lic. No. 045169
PROFESSIONAL ENGINEER

Brian Komar
2020.02.14 10:53:18-05'00'

Rinker Design Assoc., P.C.
Fredericksburg, Virginia
DRAINAGE ENGINEER

DESIGN FEATURES RELATING TO CONSTRUCTION OR TO REGULATION AND CONTROL OF TRAFFIC MAY BE SUBJECT TO CHANGE AS DEEMED NECESSARY BY THE DEPARTMENT

SCALE
V: 1" = 5'
H: 1" = 25'
0 25' 50'

Legend

- DENOTES PROP. GRADE
- DENOTES EX. GRADE
- DENOTES HGL
- DENOTES EX. STR. OR PIPE

Notes:

1) Storm Sewer Pipes shown on the profile are represented by their inner diameter dimension, and do not include wall thicknesses.

2) Only existing Utilities, at the time of the survey, are shown on the Storm Sewer Pipe Profiles. These profiles do not reflect either planned re-location of Utilities or proposed Utilities. The Contractor is also directed to any Utility Plans that may exist as part of this plan assembly.

3) Not all Utilities are shown on the Storm Sewer Profiles, only those Utilities listed on the Utility Test Hole Data Sheet with the addition of Sanitary Sewer line crossings.

4) All Utility locations are approximate, and are based on information from the project's Test Hole Data Sheet. Utility information shown is specific to its corresponding Utility Test Hole location.

5) Utility Test Hole Information is located on Sheet IH.

6) Utility clearance dimensions shown assume the use of concrete Storm Sewer Pipe and corresponding pipe thicknesses (worst case scenario).

7) Contractor to verify the condition of all existing storm structures (manholes) that are to be modified and connected by proposed storm drain pipes.

PROJECT	SHEET NO.
U000-138-R04	17(3)

PROJECT MANAGER Perry Eisenach, P.E. - City of Winchester (540) 667-2085
SURVEYED BY, DATE Sidney Thomas, L.S. - Rinker Design Associates (703) 368-7373, October 2014
DESIGN BY John A. Glometti, P.E. - Rinker Design Associates (703) 334-0060
SUBSURFACE UTILITY BY, DATE Matthew Bansiem - Mid Atlantic Utility Locating (703) 378-0100, August 2014

Rinker Design Associates, P.C.
Civil Engineering • Surveying • Environmental Planning
Transportation • Right of Way Services
Office Locations
Fredericksburg, Va. 22401 Phone: (540) 373-1460 Fax: (540) 373-0149
Sterling, Va. 20166 Phone: (703) 450-4480 Fax: (540) 373-0149
Winchester, Va. 22601 Phone: (540) 662-4067 Fax: (540) 662-4068

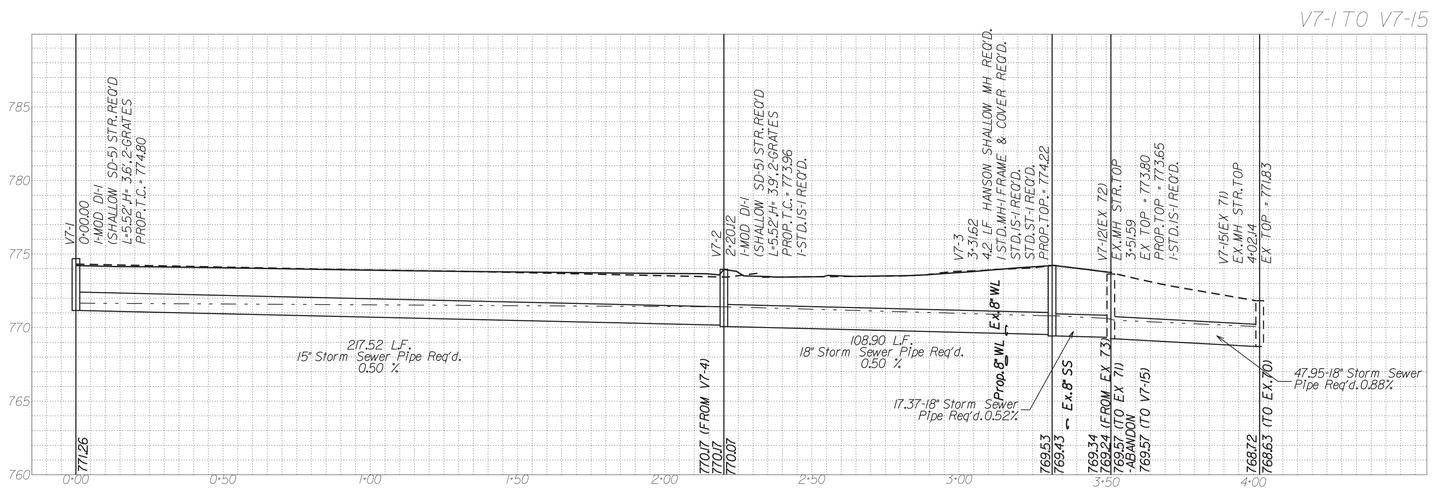

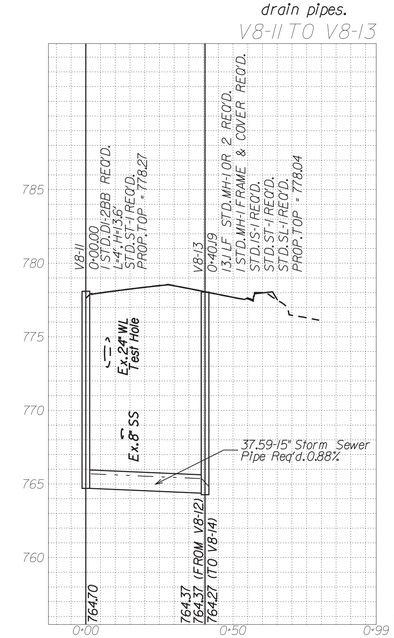

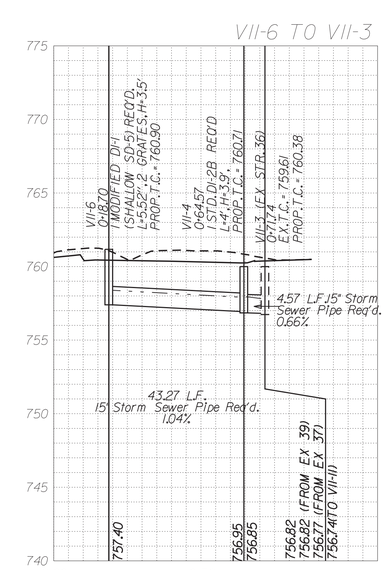

BRIAN P. KOMAR
Lic. No. 045169
COMMONWEALTH OF VIRGINIA
PROFESSIONAL ENGINEER

Brian Komar
2020.02.14 10:52:57-05'00'

Rinker Design Assoc., P.C.
Fredericksburg, Virginia
DRAINAGE ENGINEER

REVISED	STATE	ROUTE	PROJECT	SHEET NO.
	VA.	11	U000-138-R04 C501	17(4)

DESIGN FEATURES RELATING TO CONSTRUCTION OR TO REGULATION AND CONTROL OF TRAFFIC MAY BE SUBJECT TO CHANGE AS DEEMED NECESSARY BY THE DEPARTMENT

SCALE
V: 1"=5'
H: 1"=25'
0 25' 50'

Legend

- DENOTES PROP. GRADE
- DENOTES EX. GRADE
- DENOTES HGL
- DENOTES EX. STR. OR PIPE

Notes:

1) Storm Sewer Pipes shown on the profile are represented by their inner diameter dimension, and do not include wall thicknesses.

2) Only existing Utilities, at the time of the survey, are shown on the Storm Sewer Pipe Profiles. These profiles do not reflect either planned re-location of Utilities or proposed Utilities. The Contractor is also directed to any Utility Plans that may exist as part of this plan assembly.

3) Not all Utilities are shown on the Storm Sewer Profiles, only those Utilities listed on the Utility Test Hole Data Sheet with the addition of Sanitary Sewer line crossings.

4) All Utility locations are approximate, and are based on information from the project's Test Hole Data Sheet. Utility Information shown is specific to its corresponding Utility Test Hole location.

5) Utility Test Hole Information is located on Sheet 1H.

6) Utility clearance dimensions shown assume the use of concrete Storm Sewer Pipe and corresponding pipe thicknesses (worst case scenario).

7) Contractor to verify the condition of all existing storm structures (manholes) that are to be modified and connected by proposed storm drain pipes.

PROJECT	SHEET NO.
U000-138-R04	17(4)

PROJECT MANAGER Perry Eisenach, P.E. - City of Winchester (540) 667-2085
SURVEYED BY, DATE Sidney Thomas, L.S. - Rinker Design Associates (703) 368-7373, October 2014
DESIGN BY John A. Glometti, P.E. - Rinker Design Associates (703) 334-0060
SUBSURFACE UTILITY BY, DATE Matthew Bansiem - Mid Atlantic Utility Locating (703) 378-0100, August 2014

Office Locations
Main Office
8607 Westwood Center Drive
Suite 310
Vienna, VA 22182
Phone: (703) 334-0060
Fax: (703) 334-0387

Fredericksburg, VA
Phone: (540) 373-4448
Fax: (540) 373-4449

Richmond
4914 Fitzpatrick Drive
Suite 100
Chesterfield, VA 23832
Phone: (804) 768-7700
Fax: (804) 768-7705

Rinker Design Associates, P.C.
Civil Engineering • Surveying • Environmental
Transportation • Land Development
Right of Way Services

GDA Rinker
SHOP DESIGN SERVICE

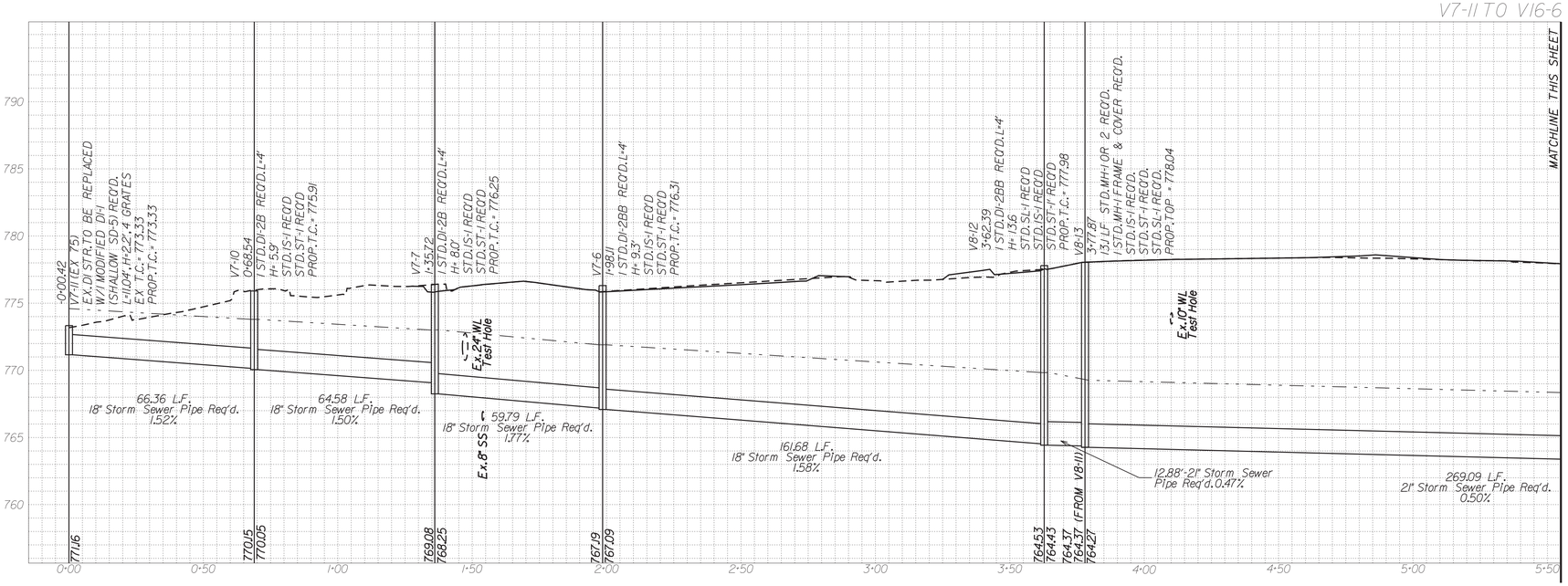

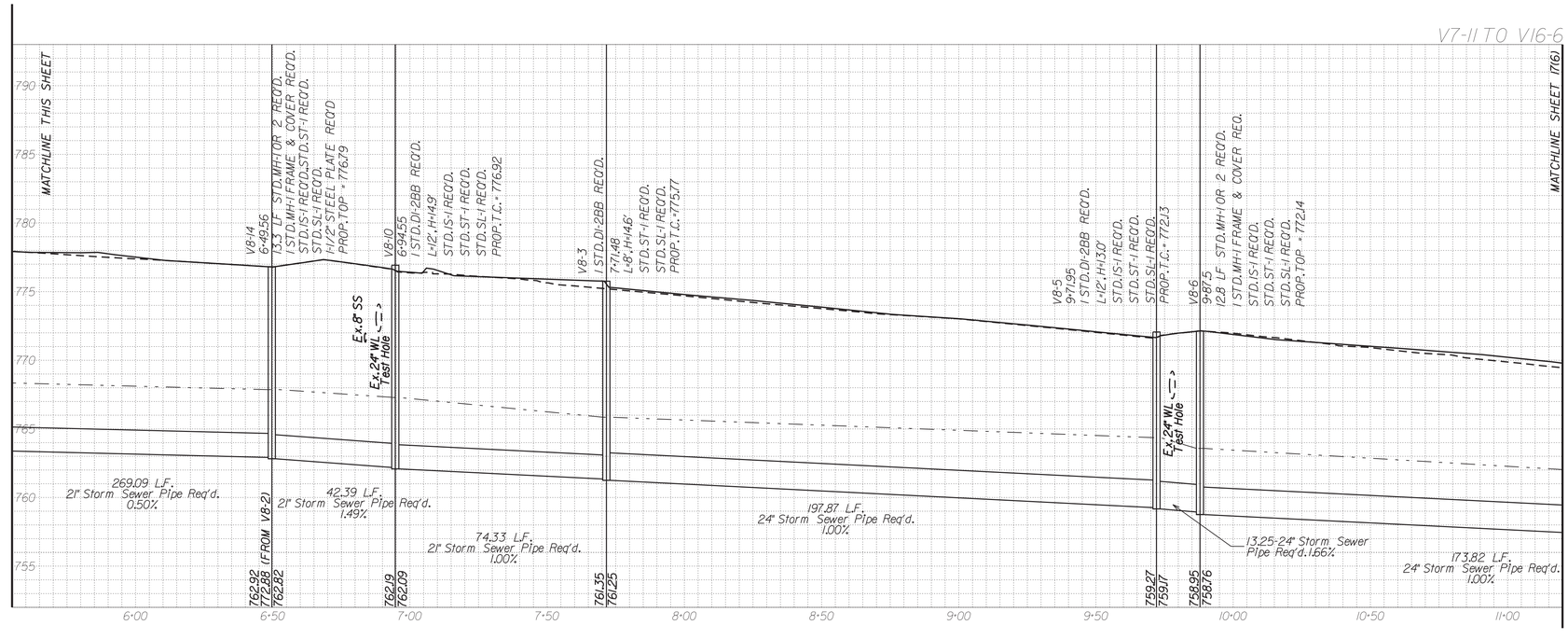

COMMONWEALTH OF VIRGINIA
BRIAN P. KOMAR
Lic. No. 045169
PROFESSIONAL ENGINEER

Brian Komar
2020.02.14 10:52:37-05'00'

Rinker Design Assoc., P.C.
Fredericksburg, Virginia
DRAINAGE ENGINEER

REVISED	STATE	STATE ROUTE	STATE PROJECT	SHEET NO.
	VA.	11	U000-138-R04 C501	17(5)

DESIGN FEATURES RELATING TO CONSTRUCTION OR TO REGULATION AND CONTROL OF TRAFFIC MAY BE SUBJECT TO CHANGE AS DEEMED NECESSARY BY THE DEPARTMENT

SCALE
V: 1" = 5'
H: 1" = 25'
0 25' 50'

Legend

- DENOTES PROP. GRADE
- DENOTES EX. GRADE
- DENOTES HGL
- DENOTES EX. STR. OR PIPE

Notes:

1) Storm Sewer Pipes shown on the profile are represented by their inner diameter dimension, and do not include wall thicknesses.

2) Only existing Utilities, at the time of the survey, are shown on the Storm Sewer Pipe Profiles. These profiles do not reflect either planned re-location of Utilities or proposed Utilities. The Contractor is also directed to any Utility Plans that may exist as part of this plan assembly.

3) Not all Utilities are shown on the Storm Sewer Profiles, only those Utilities listed on the Utility Test Hole Data Sheet with the addition of Sanitary Sewer line crossings.

4) All Utility locations are approximate, and are based on information from the project's Test Hole Data Sheet. Utility information shown is specific to its corresponding Utility Test Hole location.

5) Utility Test Hole Information is located on Sheet 1H.

6) Utility clearance dimensions shown assume the use of concrete Storm Sewer Pipe and corresponding pipe thicknesses (worst case scenario).

7) Contractor to verify the condition of all existing storm structures (manholes) that are to be modified and connected by proposed storm drain pipes.

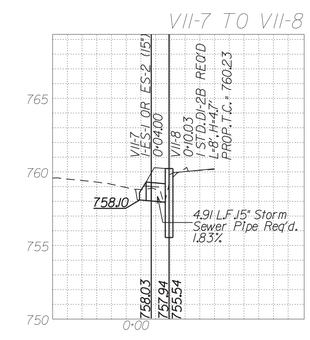

PROJECT	SHEET NO.
U000-138-R04	17(5)

PROJECT MANAGER Perry Eisenach, P.E. - City of Winchester (540) 667-2085
SURVEYED BY, DATE Sidney Thomas, L.S. - Rinker Design Associates (703) 368-7373, October 2014
DESIGN BY John A. Glometti, P.E. - Rinker Design Associates (703) 334-0060
SUBSURFACE UTILITY BY, DATE Matthew Bansiem - Mid Atlantic Utility Locating (703) 378-0100, August 2014

Rinker Design Associates, P.C.
Civil Engineering • Surveying • Environmental
Transportation • Land Development • Right of Way Services
Office Locations
4411 Plaza Green Drive
Suite 100
Lexington, VA 24450
Phone: (540) 463-5591
Fax: (540) 463-5593
401 Lawyers Road, N.W.
Suite 100
Vienna, VA 22180
Phone: (703) 334-0060
Fax: (703) 255-8250
107 N. Kent Street
Suite 101
Winchester, VA 22601
Phone: (540) 667-2085
Fax: (540) 667-0222

REVISED	STATE	STATE ROUTE	STATE PROJECT	SHEET NO.
	VA.	11	U000-138-R04 C501	17(6)

COMMONWEALTH OF VIRGINIA
BRIAN P. KOMAR
Lic. No. 045169
PROFESSIONAL ENGINEER

Brian Komar
2020.02.14 10:52:16-05'00'

Rinker Design Assoc., P.C.
Fredericksburg, Virginia
DRAINAGE ENGINEER

DESIGN FEATURES RELATING TO CONSTRUCTION OR TO REGULATION AND CONTROL OF TRAFFIC MAY BE SUBJECT TO CHANGE AS DEEMED NECESSARY BY THE DEPARTMENT

SCALE
V: 1"=5'
H: 1"=25'
0 25' 50'

Legend

- DENOTES PROP. GRADE
- DENOTES EX. GRADE
- DENOTES HGL
- DENOTES EX. STR. OR PIPE

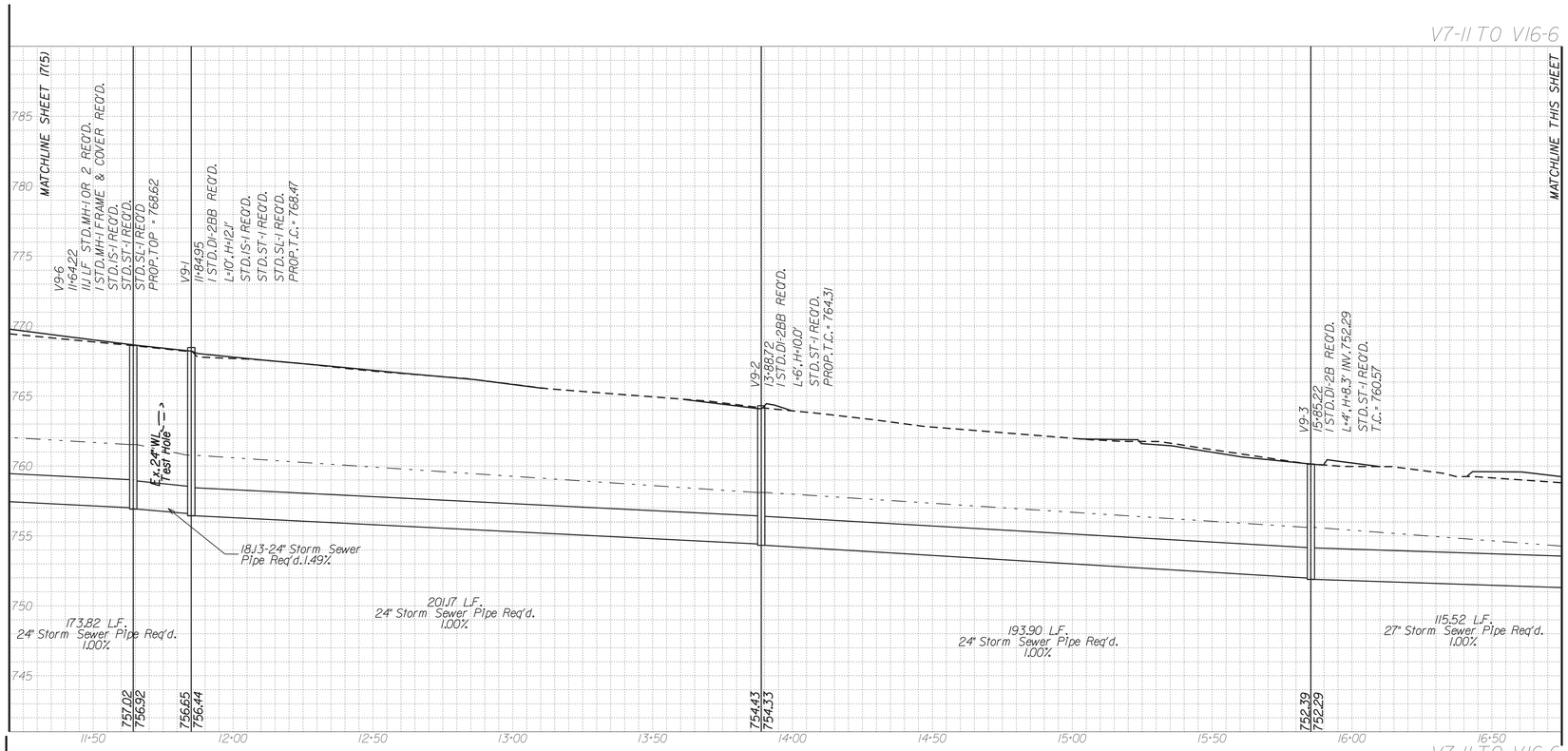

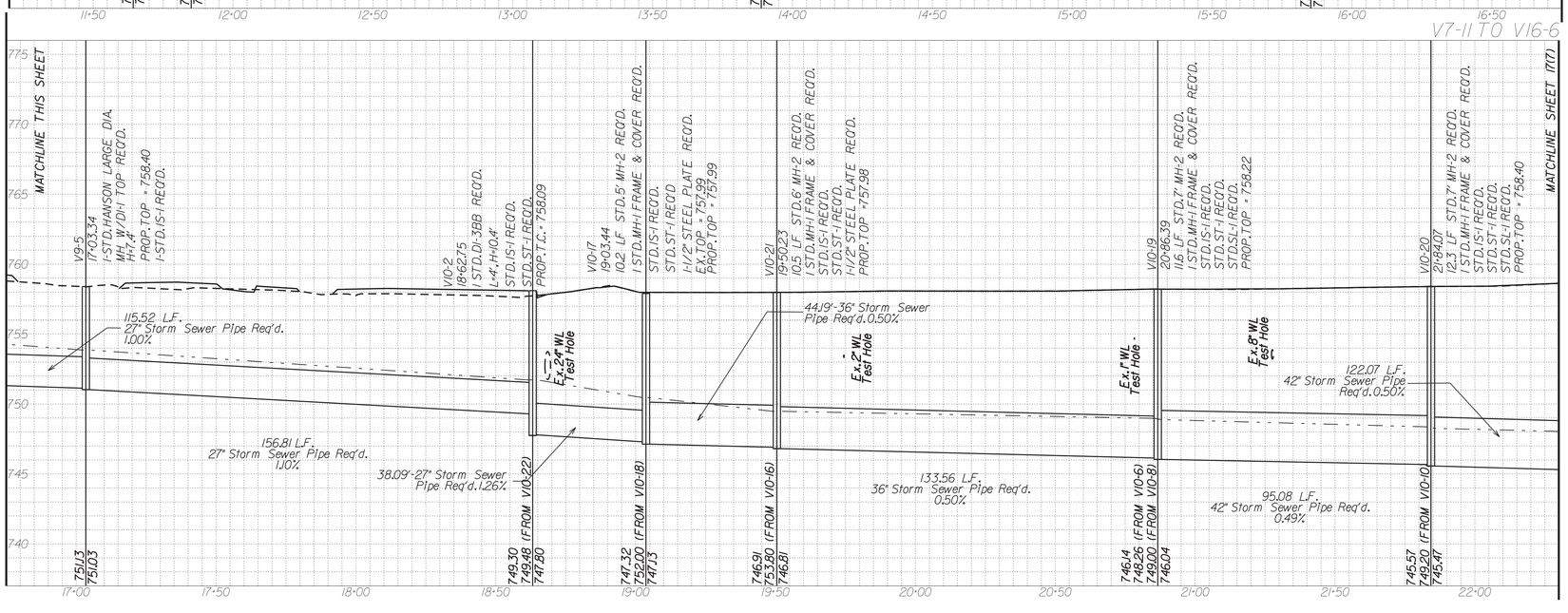

Notes:

1) Storm Sewer Pipes shown on the profile are represented by their inner diameter dimension, and do not include wall thicknesses.

2) Only existing Utilities, at the time of the survey, are shown on the Storm Sewer Pipe Profiles. These profiles do not reflect either planned re-location of Utilities or proposed Utilities. The Contractor is also directed to any Utility Plans that may exist as part of this plan assembly.

3) Not all Utilities are shown on the Storm Sewer Profiles, only those Utilities listed on the Utility Test Hole Data Sheet with the addition of Sanitary Sewer line crossings.

4) All Utility locations are approximate, and are based on information from the project's Test Hole Data Sheet. Utility information shown is specific to its corresponding Utility Test Hole location.

5) Utility Test Hole Information is located on Sheet 1H.

6) Utility clearance dimensions shown assume the use of concrete Storm Sewer Pipe and corresponding pipe thicknesses (worst case scenario).

7) Contractor to verify the condition of all existing storm structures (manholes) that are to be modified and connected by proposed storm drain pipes.

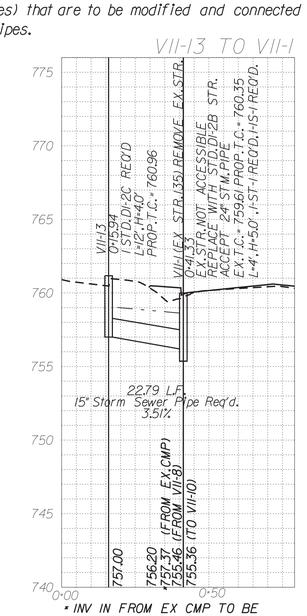

* INV IN FROM EX CMP TO BE VERIFIED BY CONTRACTOR. EX.MH IS BURIED.

PROJECT	SHEET NO.
U000-138-R04	17(6)

PROJECT MANAGER Perry Eisenach, P.E. - City of Winchester (540) 667-2085
SURVEYED BY, DATE Sidney Thomas, L.S. - Rinker Design Associates (703) 368-7373, October 2014
DESIGN BY John A. Glometti, P.E. - Rinker Design Associates (703) 334-0060
SUBSURFACE UTILITY BY, DATE Matthew Bansiem - Mid Atlantic Utility Locating (703) 378-0100, August 2014

Office Locations
Rinker Design Associates, P.C.
Civil Engineering • Surveying • Environmental
Transportation • Land Development • Right of Way Services
Main Office
107 N. Kent Street
Winchester, VA 22601
Phone: (540) 667-2085
Fax: (540) 667-0222
Fairfax Office
4121 Wilson Boulevard
Suite 101
Arlington, VA 22203
Phone: (703) 334-0060
Fax: (703) 522-5180
4417 Corporation Drive
Suite 100
Woodbridge, VA 22192
Phone: (703) 378-0100
Fax: (703) 523-0117

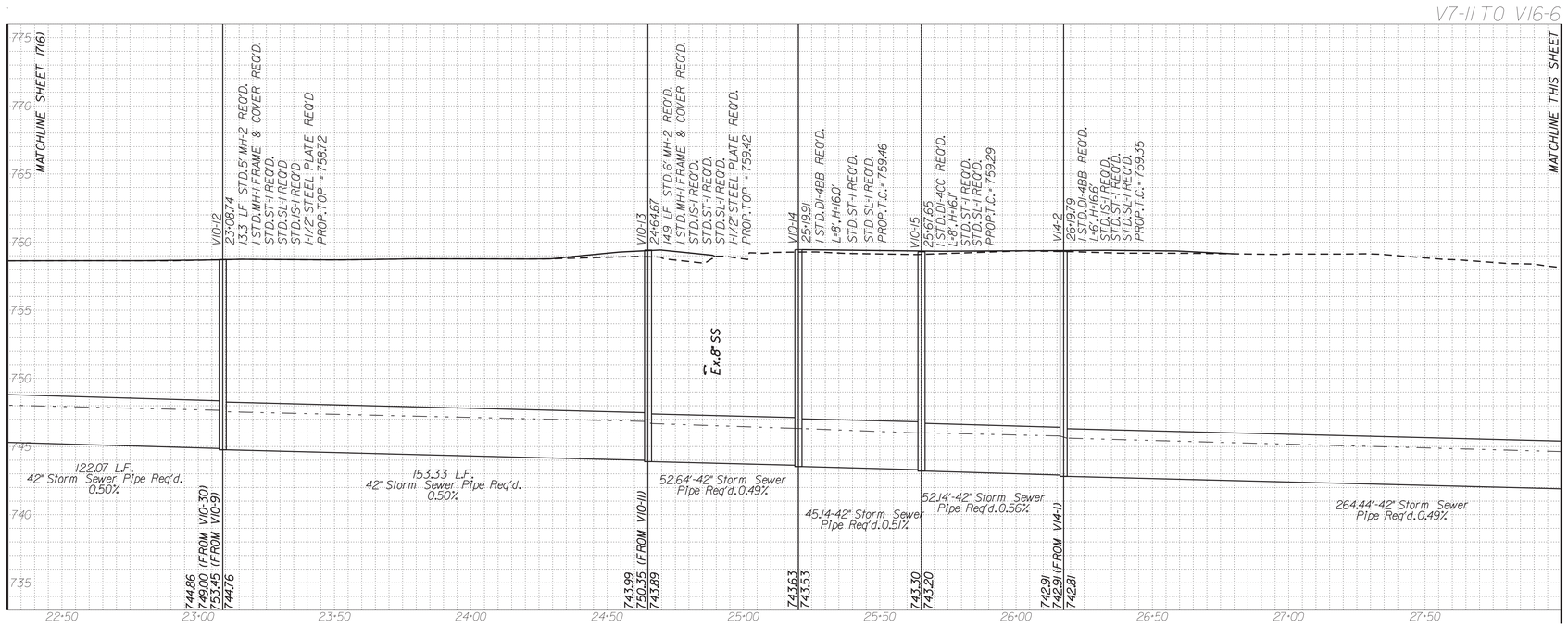

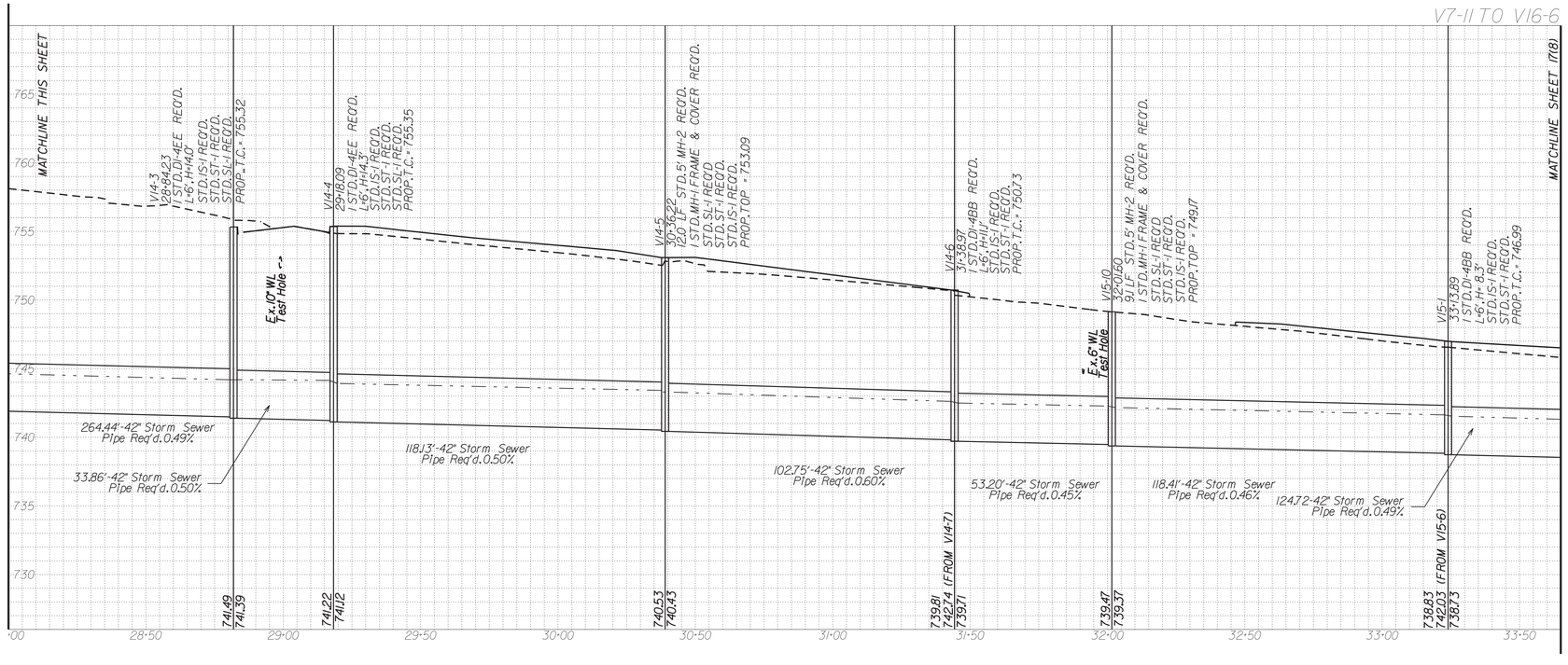

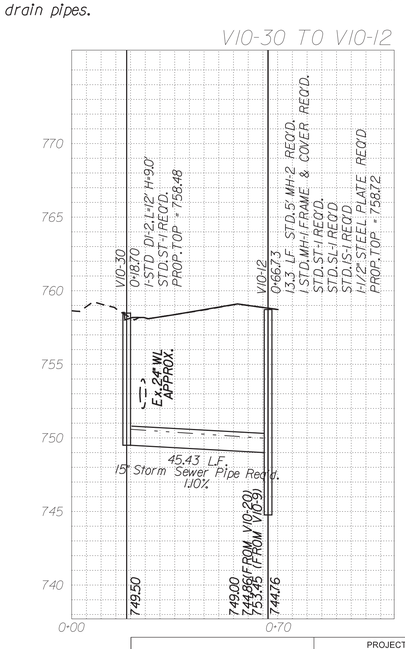

REVISED	STATE	ROUTE	PROJECT	SHEET NO.
	VA.	11	U000-138-R04 C501	17(7)

COMMONWEALTH OF VIRGINIA
BRIAN P. KOMAR
Lic. No. 045169
PROFESSIONAL ENGINEER

Brian Komar
2020.02.14 10:51:15-05'00'

Rinker Design Assoc., P.C.
Fredericksburg, Virginia
DRAINAGE ENGINEER

DESIGN FEATURES RELATING TO CONSTRUCTION OR TO REGULATION AND CONTROL OF TRAFFIC MAY BE SUBJECT TO CHANGE AS DEEMED NECESSARY BY THE DEPARTMENT

SCALE
V: 1"=5'
H: 1"=25'
0 25' 50'

Legend

- DENOTES PROP. GRADE
- DENOTES EX. GRADE
- DENOTES HGL
- DENOTES EX. STR. OR PIPE

Notes:

1) Storm Sewer Pipes shown on the profile are represented by their inner diameter dimension, and do not include wall thicknesses.

2) Only existing Utilities, at the time of the survey, are shown on the Storm Sewer Pipe Profiles. These profiles do not reflect either planned re-location of Utilities or proposed Utilities. The Contractor is also directed to any Utility Plans that may exist as part of this plan assembly.

3) Not all Utilities are shown on the Storm Sewer Profiles, only those Utilities listed on the Utility Test Hole Data Sheet with the addition of Sanitary Sewer line crossings.

4) All Utility locations are approximate, and are based on information from the project's Test Hole Data Sheet. Utility information shown is specific to its corresponding Utility Test Hole location.

5) Utility Test Hole Information is located on Sheet 1H.

6) Utility clearance dimensions shown assume the use of concrete Storm Sewer Pipe and corresponding pipe thicknesses (worst case scenario).

7) Contractor to verify the condition of all existing storm structures (manholes) that are to be modified and connected by proposed storm drain pipes.

PROJECT	SHEET NO.
U000-138-R04	17(7)

PROJECT MANAGER Perry Eisenach, P.E. - City of Winchester (540) 667-2085
SURVEYED BY, DATE Sidney Thomas, L.S. - Rinker Design Associates (703) 368-7373, October 2014
DESIGN BY John A. Glometti, P.E. - Rinker Design Associates (703) 334-0060
SUBSURFACE UTILITY BY, DATE Matthew Banstem - Mid Atlantic Utility Locating (703) 378-0100, August 2014

Rinker Design Associates, P.C.
Civil Engineering • Surveying • Environmental
Transportation • Land Development • Right of Way Services
SINCE ESTABLISHED IN 1978

Office Locations
Corporate Headquarters: 10211 Fairfax Boulevard, Suite 100, Fairfax, VA 22030, Phone: (540) 373-3336, Fax: (540) 373-8450
Fredericksburg: 2001 Jefferson Davis Highway, Suite 100, Fredericksburg, VA 22401, Phone: (540) 373-3336, Fax: (540) 373-8450
Winchester: 1400 Jubal Early Drive, Suite 100, Winchester, VA 22601, Phone: (540) 722-9311, Fax: (540) 722-9312

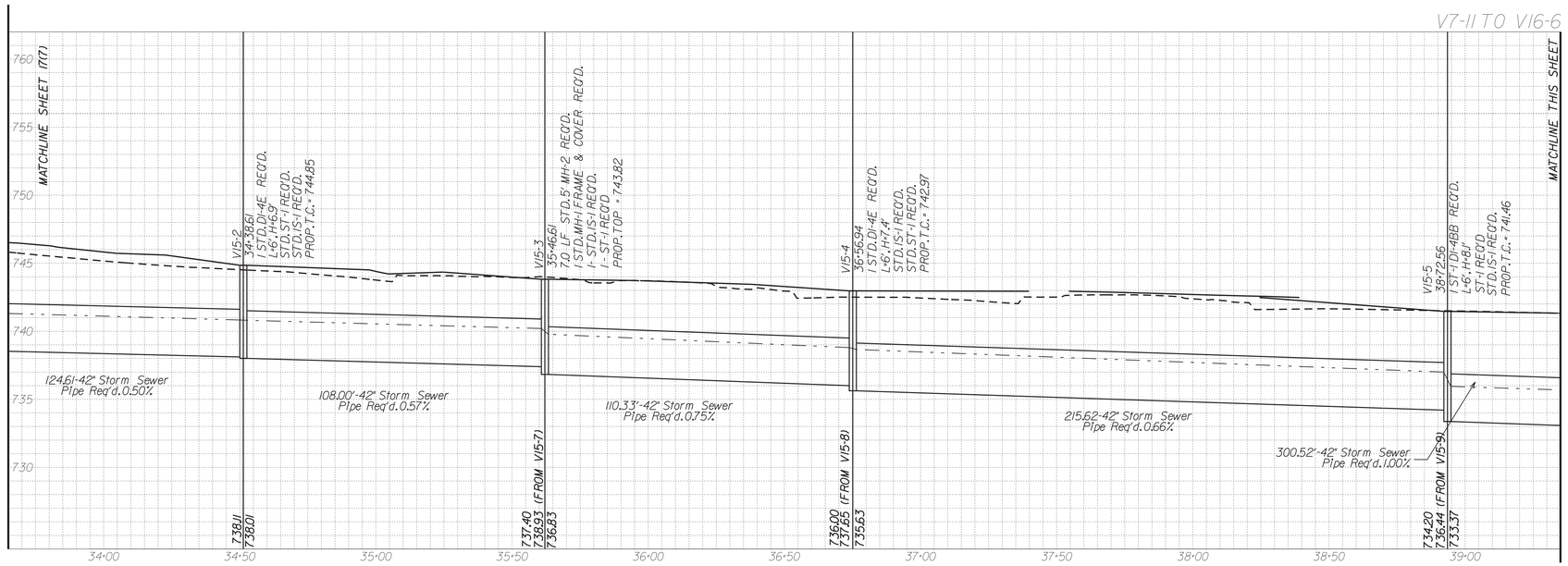

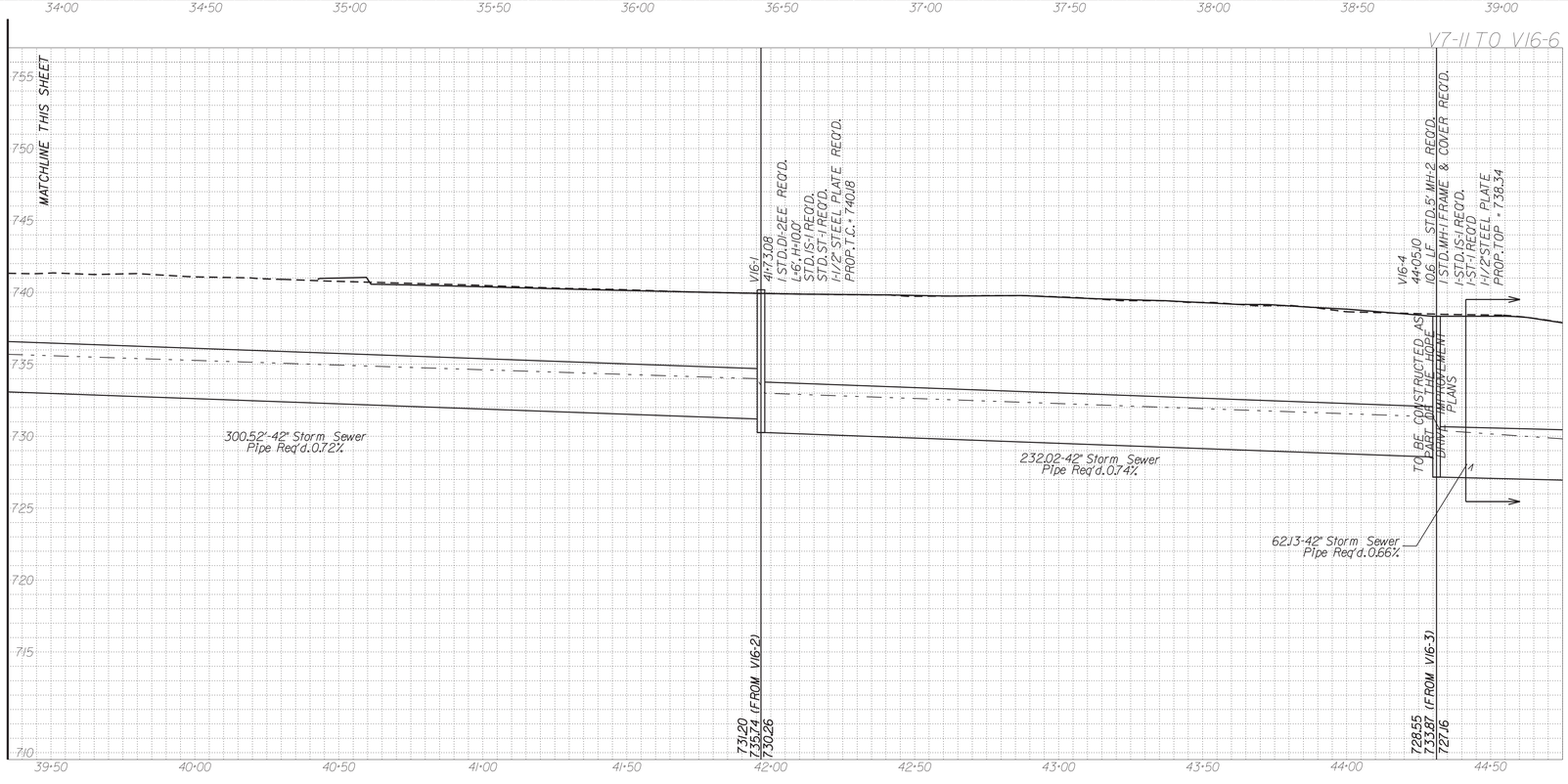

COMMONWEALTH OF VIRGINIA
BRIAN P. KOMAR
Lic. No. 045169
PROFESSIONAL ENGINEER

Brian Komar
2020.02.14 10:57:23-05'00'

Rinker Design Assoc., P.C.
Fredericksburg, Virginia
DRAINAGE ENGINEER

REVISED	STATE	STATE ROUTE	STATE PROJECT	SHEET NO.
	VA.	11	U000-138-R04 C501	17(8)

DESIGN FEATURES RELATING TO CONSTRUCTION OR TO REGULATION AND CONTROL OF TRAFFIC MAY BE SUBJECT TO CHANGE AS DEEMED NECESSARY BY THE DEPARTMENT

SCALE
V: 1" = 5'
H: 1" = 25'
0 25' 50'

Legend

- DENOTES PROP. GRADE
- DENOTES EX. GRADE
- DENOTES HGL
- DENOTES EX. STR. OR PIPE

Notes:

1) Storm Sewer Pipes shown on the profile are represented by their inner diameter dimension, and do not include wall thicknesses.

2) Only existing Utilities, at the time of the survey, are shown on the Storm Sewer Pipe Profiles. These profiles do not reflect either planned re-location of Utilities or proposed Utilities. The Contractor is also directed to any Utility Plans that may exist as part of this plan assembly.

3) Not all Utilities are shown on the Storm Sewer Profiles, only those Utilities listed on the Utility Test Hole Data Sheet with the addition of Sanitary Sewer line crossings.

4) All Utility locations are approximate, and are based on information from the project's Test Hole Data Sheet. Utility information shown is specific to its corresponding Utility Test Hole location.

5) Utility Test Hole Information is located on Sheet 1H.

6) Utility clearance dimensions shown assume the use of concrete Storm Sewer Pipe and corresponding pipe thicknesses (worst case scenario).

7) Contractor to verify the condition of all existing storm structures (manholes) that are to be modified and connected by proposed storm drain pipes.

Office Locations
Main Office
401 Lafayette Street
Suite 100
Fredericksburg, VA 22401
Phone: (540) 373-3373
Fax: (540) 373-3373

Winchester Office
107 N. Kent Street
Suite 101
Winchester, VA 22601
Phone: (540) 667-2085
Fax: (540) 667-2089

Rinker Design Associates, P.C.
Civil Engineering • Surveying • Land Planning
Transportation • Environmental
Right of Way Services

PROJECT MANAGER Perry Eisenach, P.E. - City of Winchester (540) 667-2085
SURVEYED BY, DATE Sidney Thomas, L.S. - Rinker Design Associates (703) 368-7373, October 2014
DESIGN BY John A. Glometti, P.E. - Rinker Design Associates (703) 334-0060
SUBSURFACE UTILITY BY, DATE Matthew Bansiem - Mid Atlantic Utility Locating (703) 378-0100, August 2014

REVISED	STATE	STATE ROUTE	STATE PROJECT	SHEET NO.
	VA.	11	U000-138-R04 C501	17(9)

COMMONWEALTH OF VIRGINIA
BRIAN P. KOMAR
Lic. No. 045169
PROFESSIONAL ENGINEER

Brian Komar
2020.02.14 10:56:57-05'00'

Rinker Design Assoc., P.C.
Fredericksburg, Virginia
DRAINAGE ENGINEER

DESIGN FEATURES RELATING TO CONSTRUCTION OR TO REGULATION AND CONTROL OF TRAFFIC MAY BE SUBJECT TO CHANGE AS DEEMED NECESSARY BY THE DEPARTMENT

SCALE
V: 1"=5'
H: 1"=25'
0 25' 50'

Legend

- DENOTES PROP. GRADE
- DENOTES EX. GRADE
- DENOTES HGL
- DENOTES EX. STR. OR PIPE

Notes:

1) Storm Sewer Pipes shown on the profile are represented by their inner diameter dimension, and do not include wall thicknesses.

2) Only existing Utilities, at the time of the survey, are shown on the Storm Sewer Pipe Profiles. These profiles do not reflect either planned re-location of Utilities or proposed Utilities. The Contractor is also directed to any Utility Plans that may exist as part of this plan assembly.

3) Not all Utilities are shown on the Storm Sewer Profiles, only those Utilities listed on the Utility Test Hole Data Sheet with the addition of Sanitary Sewer line crossings.

4) All Utility locations are approximate, and are based on information from the project's Test Hole Data Sheet. Utility information shown is specific to its corresponding Utility Test Hole location.

5) Utility Test Hole Information is located on Sheet 1H.

6) Utility clearance dimensions shown assume the use of concrete Storm Sewer Pipe and corresponding pipe thicknesses (worst case scenario).

7) Contractor to verify the condition of all existing storm structures (manholes) that are to be modified and connected by proposed storm drain pipes.

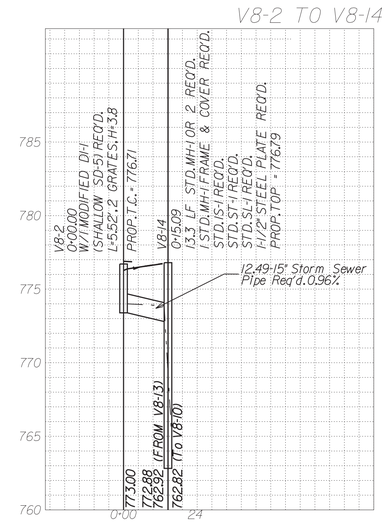

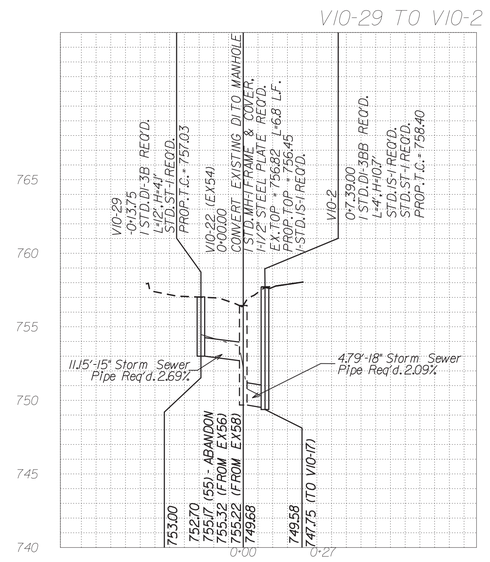

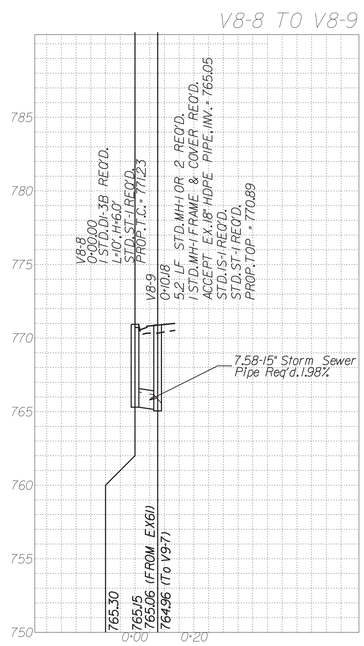

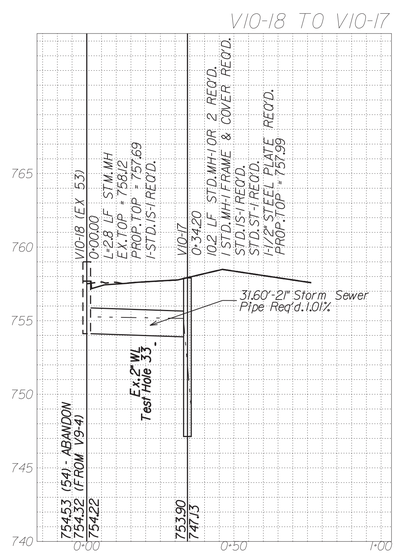

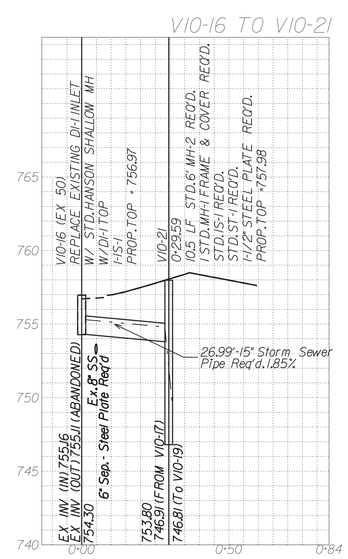

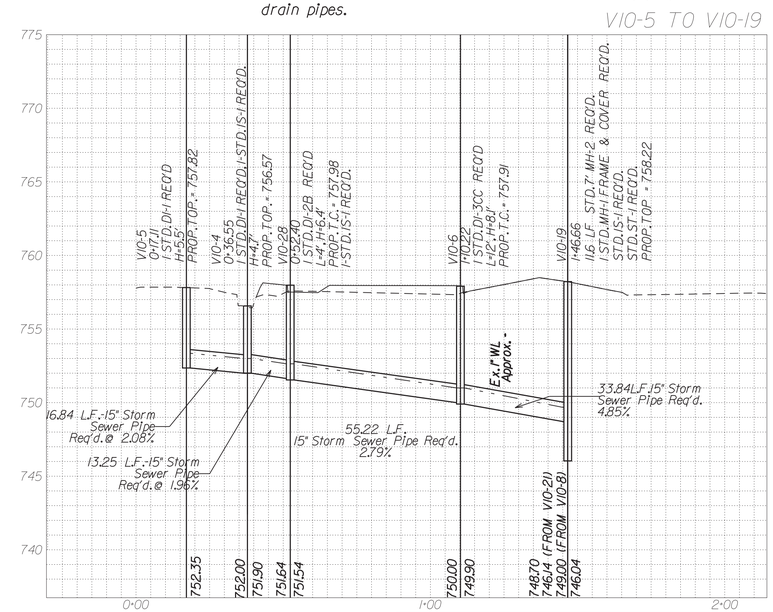

PROJECT	SHEET NO.
U000-138-R04	17(9)

PROJECT MANAGER Perry Eisenach, P.E. - City of Winchester (540) 667-2085
SURVEYED BY, DATE Sidney Thomas, L.S. - Rinker Design Associates (703) 368-7373, October 2014
DESIGN BY John A. Glometti, P.E. - Rinker Design Associates (703) 334-0060
SUBSURFACE UTILITY BY, DATE Matthew Bansiem - Mid Atlantic Utility Locating (703) 378-0100, August 2014

Rinker Design Associates, P.C.
Civil Engineering • Surveying • Environmental
Transportation • Land Development • Right of Way Services
SHOPPING CENTER DESIGN

Office Locations
Main Office
Fredericksburg, VA 22401
Phone: (540) 373-7020
Fax: (540) 373-0497
Northern Virginia Office
Sterling, VA 20164
Phone: (703) 834-0060
Fax: (703) 834-0080
Richmond Office
Ashland, VA 23005
Phone: (804) 798-9460
Fax: (804) 798-9463

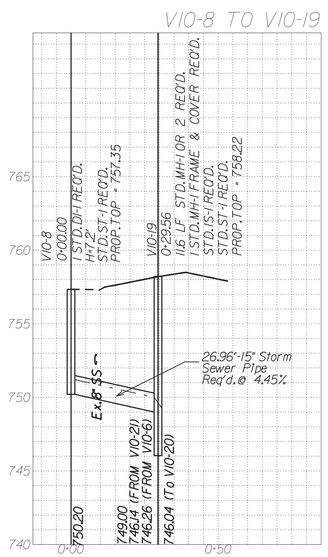

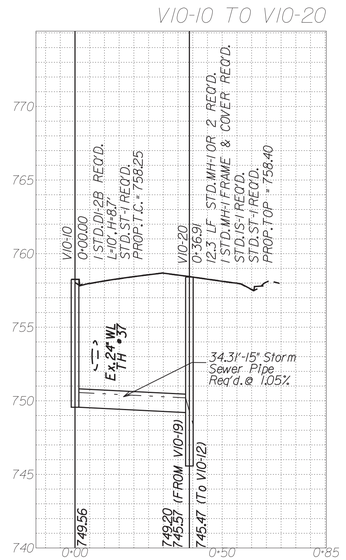

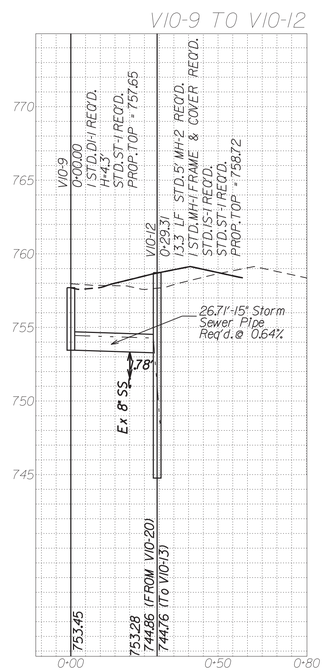

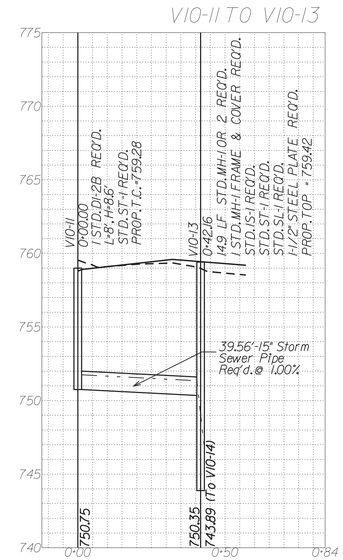

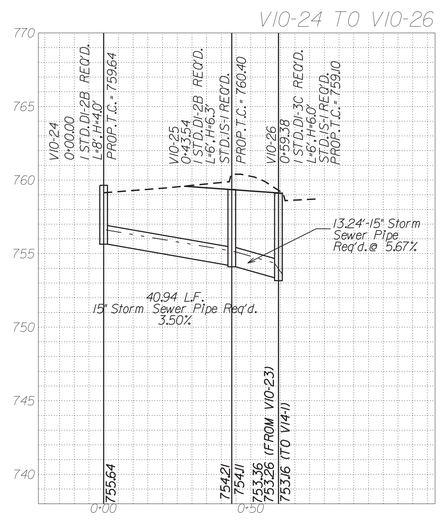

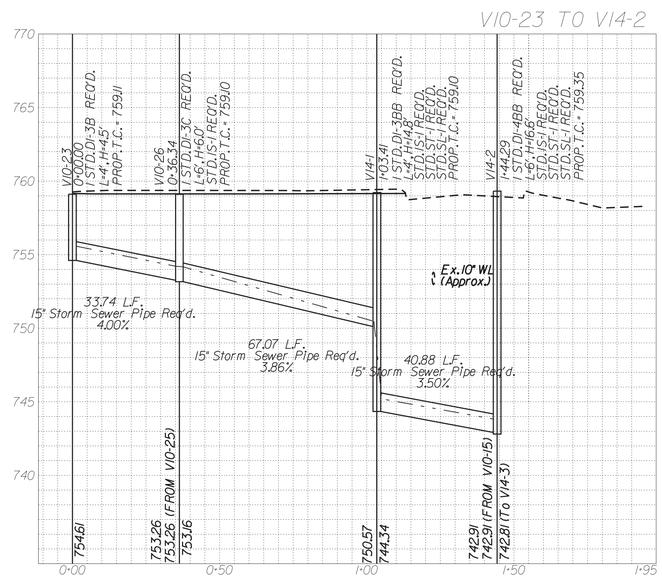

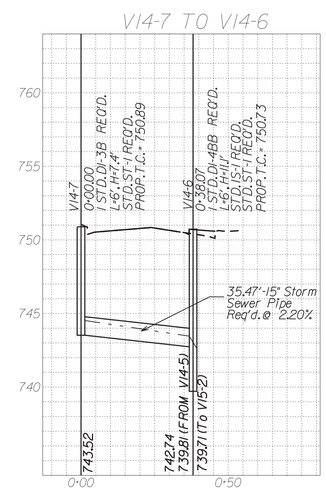

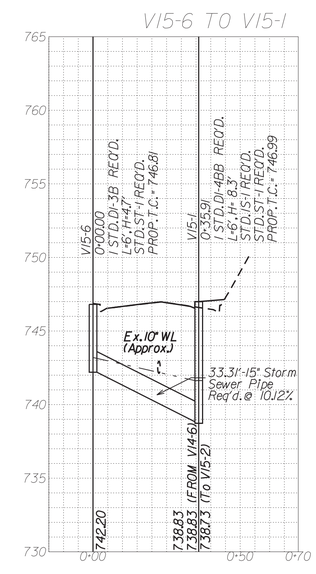

COMMONWEALTH OF VIRGINIA
BRIAN P. KOMAR
Lic. No. 045169
PROFESSIONAL ENGINEER

Brian Komar
2020.02.14 10:56:37-05'00'

Rinker Design Assoc., P.C.
Fredericksburg, Virginia
DRAINAGE ENGINEER

REVISED	STATE	STATE ROUTE	STATE PROJECT	SHEET NO.
	VA.	11	U000-138-R04 C501	17(10)

DESIGN FEATURES RELATING TO CONSTRUCTION OR TO REGULATION AND CONTROL OF TRAFFIC MAY BE SUBJECT TO CHANGE AS DEEMED NECESSARY BY THE DEPARTMENT

SCALE
V: 1" = 5'
H: 1" = 25'
0 25' 50'

Legend

- DENOTES PROP. GRADE
- DENOTES EX. GRADE
- DENOTES HGL
- DENOTES EX. STR. OR PIPE

Notes:

1) Storm Sewer Pipes shown on the profile are represented by their inner diameter dimension, and do not include wall thicknesses.

2) Only existing Utilities, at the time of the survey, are shown on the Storm Sewer Pipe Profiles. These profiles do not reflect either planned re-location of Utilities or proposed Utilities. The Contractor is also directed to any Utility Plans that may exist as part of this plan assembly.

3) Not all Utilities are shown on the Storm Sewer Profiles, only those Utilities listed on the Utility Test Hole Data Sheet with the addition of Sanitary Sewer line crossings.

4) All Utility locations are approximate, and are based on information from the project's Test Hole Data Sheet. Utility Information shown is specific to its corresponding Utility Test Hole location.

5) Utility Test Hole Information is located on Sheet 1H.

6) Utility clearance dimensions shown assume the use of concrete Storm Sewer Pipe and corresponding pipe thicknesses (worst case scenario).

7) Contractor to verify the condition of all existing storm structures (manholes) that are to be modified and connected by proposed storm drain pipes.

PROJECT MANAGER Perry Eisenach, P.E. - City of Winchester (540) 667-2085
SURVEYED BY, DATE Sidney Thomas, L.S. - Rinker Design Associates (703) 368-7373, October 2014
DESIGN BY John A. Glomelli, P.E. - Rinker Design Associates (703) 334-0060
SUBSURFACE UTILITY BY, DATE Matthew Bansiem - Mid Atlantic Utility Locating (703) 378-0100, August 2014

Rinker Design Associates, P.C.
Civil Engineering • Surveying • Environmental
Transportation • Land Planning • Right of Way Services

Office Locations
Main Office
10437 Innovation Drive
Suite 190
Manassas, VA 20110
Phone: (703) 361-5780
Fax: (703) 361-5781

Fredericksburg
401 Mary Lycan Drive
Suite 101
Fredericksburg, VA 22401
Phone: (540) 373-8020
Fax: (540) 373-8021

Richmond
4914 Fitzhugh Avenue
Suite 105
Richmond, VA 23230
Phone: (804) 355-1460
Fax: (804) 355-1464

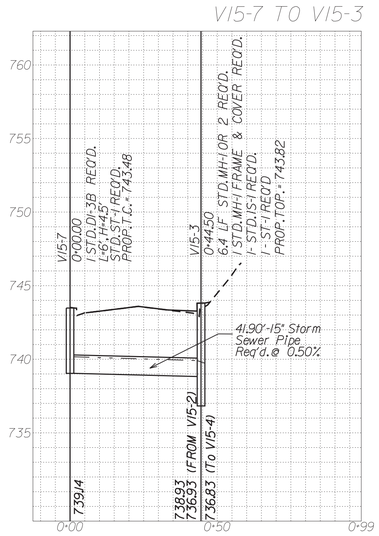

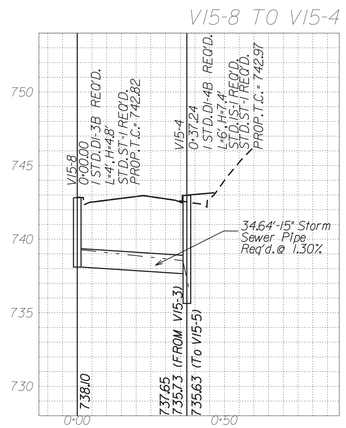

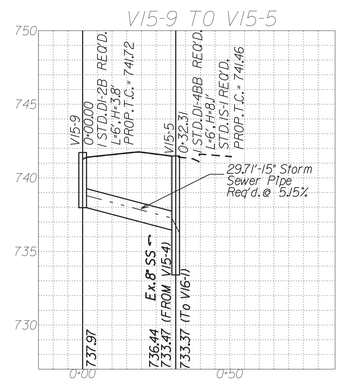

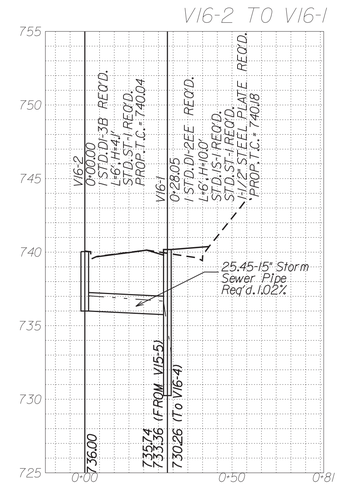

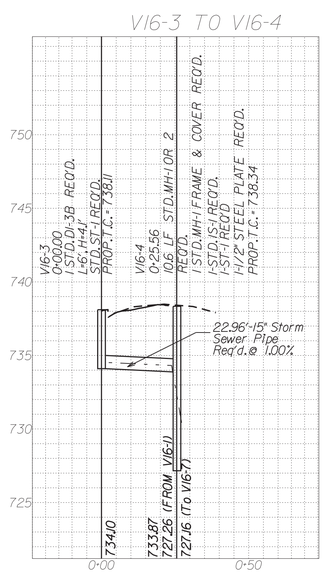

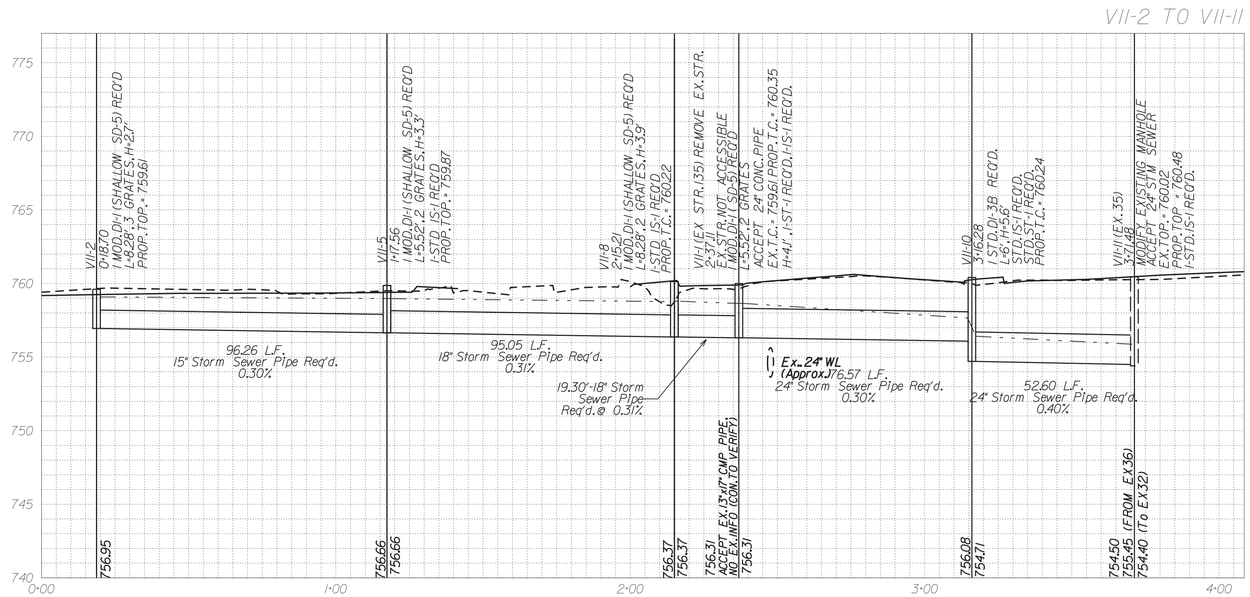

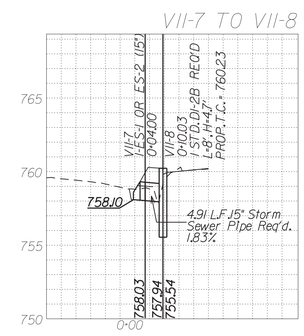

COMMONWEALTH OF VIRGINIA
BRIAN P. KOMAR
Lic. No. 045169
PROFESSIONAL ENGINEER

Brian Komar
2020.02.14 10:56:16-05'00'

Rinker Design Assoc., P.C.
Fredericksburg, Virginia
DRAINAGE ENGINEER

REVISED	STATE	STATE ROUTE	STATE PROJECT	SHEET NO.
	VA.	11	U000-138-R04 C501	17(11)

DESIGN FEATURES RELATING TO CONSTRUCTION OR TO REGULATION AND CONTROL OF TRAFFIC MAY BE SUBJECT TO CHANGE AS DEEMED NECESSARY BY THE DEPARTMENT

SCALE
V: 1"=5'
H: 1"=25'
0 25' 50'

Legend

- DENOTES PROP. GRADE
- DENOTES EX. GRADE
- DENOTES HGL
- DENOTES EX. STR. OR PIPE

Notes:

1) Storm Sewer Pipes shown on the profile are represented by their inner diameter dimension, and do not include wall thicknesses.

2) Only existing Utilities, at the time of the survey, are shown on the Storm Sewer Pipe Profiles. These profiles do not reflect either planned re-location of Utilities or proposed Utilities. The Contractor is also directed to any Utility Plans that may exist as part of this plan assembly.

3) Not all Utilities are shown on the Storm Sewer Profiles, only those Utilities listed on the Utility Test Hole Data Sheet with the addition of Sanitary Sewer line crossings.

4) All Utility locations are approximate, and are based on information from the project's Test Hole Data Sheet. Utility information shown is specific to its corresponding Utility Test Hole location.

5) Utility Test Hole Information is located on Sheet 1H.

6) Utility clearance dimensions shown assume the use of concrete Storm Sewer Pipe and corresponding pipe thicknesses (worst case scenario).

7) Contractor to verify the condition of all existing storm structures (manholes) that are to be modified and connected by proposed storm drain pipes.

PROJECT	SHEET NO.
U000-138-R04	17(11)

PROJECT MANAGER Perry Eisenach, P.E. - City of Winchester (540) 667-2085
SURVEYED BY, DATE Sidney Thomas, L.S. - Rinker Design Associates (703) 368-7373, October 2014
DESIGN BY John A. Glometti, P.E. - Rinker Design Associates (703) 334-0060
SUBSURFACE UTILITY BY, DATE Matthew Bansiem - Mid Atlantic Utility Locating (703) 378-0100, August 2014

Rinker Design Associates, P.C.
Civil Engineering • Surveying • Environmental
Transportation • Water Resources • Land Planning
Right of Way Services
Office Locations
107 Kent Avenue, Suite 100
Fredericksburg, VA 22401
Phone: (540) 373-4030
Fax: (540) 373-4031
4101 Fairfax Drive, Suite 100
Arlington, VA 22203
Phone: (703) 334-0060
Fax: (703) 522-5180
4101 Dominion Boulevard, Suite 100
Glen Allen, VA 23060
Phone: (804) 747-1758
Fax: (540) 373-4031

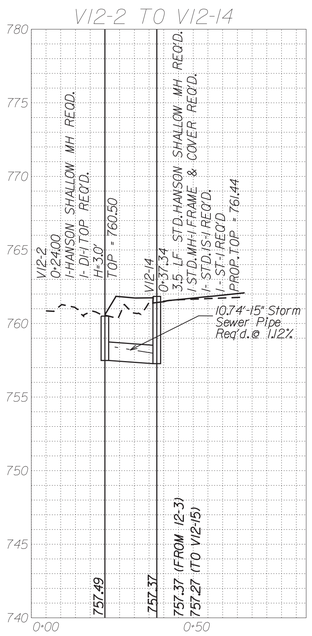

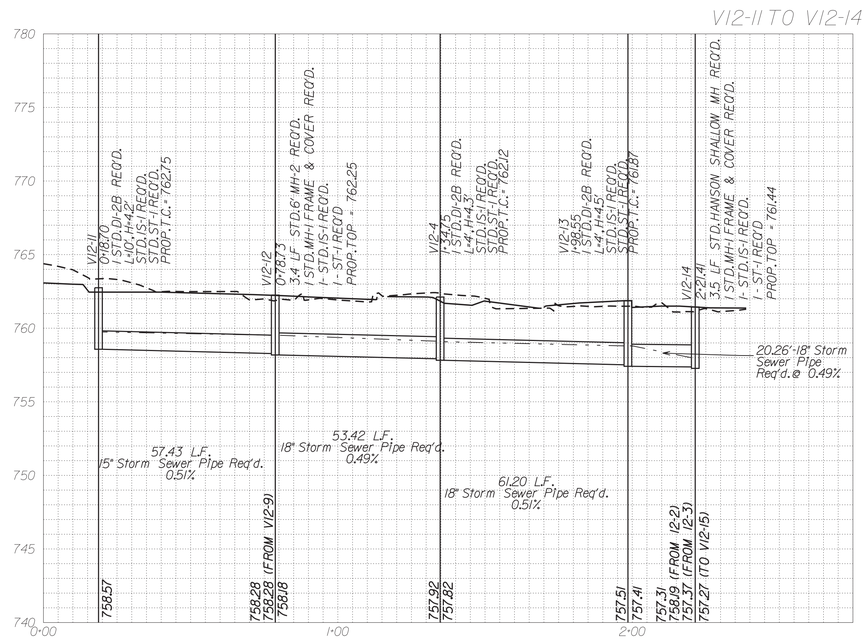

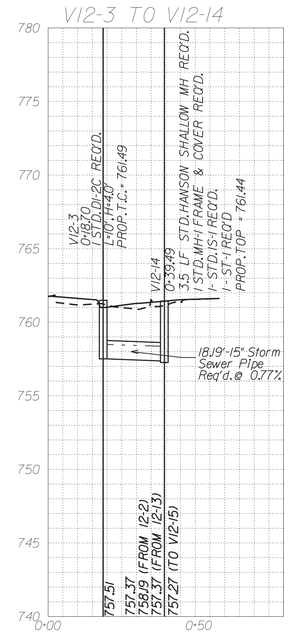

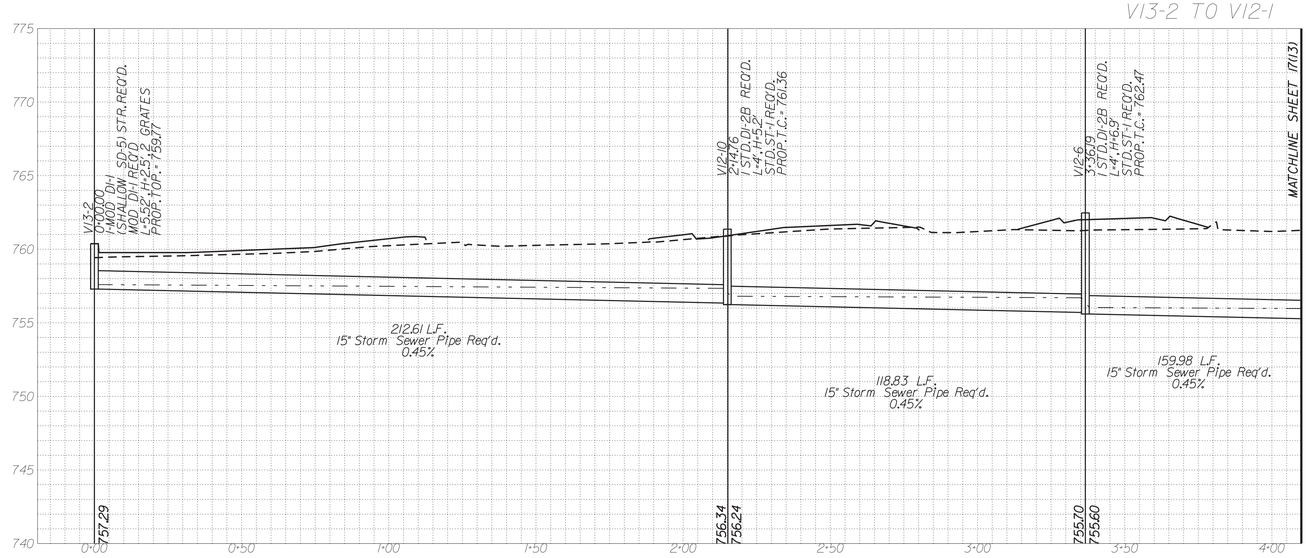

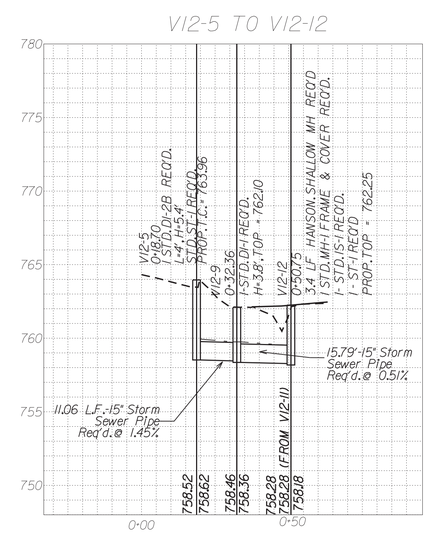

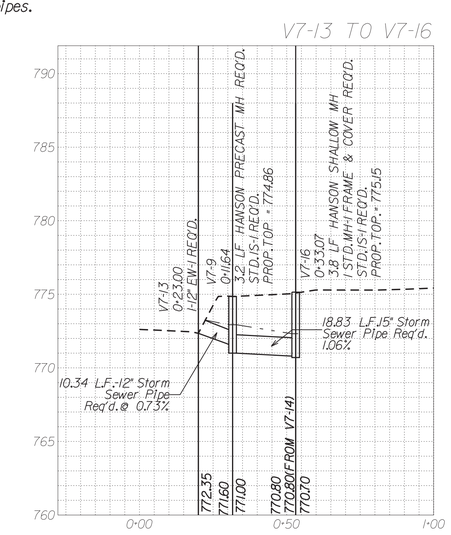

BRIAN P. KOMAR
Lic. No. 045169
COMMONWEALTH OF VIRGINIA
PROFESSIONAL ENGINEER

Brian Komar
2020.02.14 10:55:57-05'00'

Rinker Design Assoc., P.C.
Fredericksburg, Virginia
DRAINAGE ENGINEER

REVISED	STATE	STATE ROUTE	STATE PROJECT	SHEET NO.
	VA.	11	U000-138-R04 C501	17(12)

DESIGN FEATURES RELATING TO CONSTRUCTION OR TO REGULATION AND CONTROL OF TRAFFIC MAY BE SUBJECT TO CHANGE AS DEEMED NECESSARY BY THE DEPARTMENT

SCALE
V: 1" = 5'
H: 1" = 25'
0 25' 50'

Legend

- DENOTES PROP. GRADE
- DENOTES EX. GRADE
- DENOTES HGL
- DENOTES EX. STR. OR PIPE

Notes:

1) Storm Sewer Pipes shown on the profile are represented by their inner diameter dimension, and do not include wall thicknesses.

2) Only existing Utilities, at the time of the survey, are shown on the Storm Sewer Pipe Profiles. These profiles do not reflect either planned re-location of Utilities or proposed Utilities. The Contractor is also directed to any Utility Plans that may exist as part of this plan assembly.

3) Not all Utilities are shown on the Storm Sewer Profiles, only those Utilities listed on the Utility Test Hole Data Sheet with the addition of Sanitary Sewer line crossings.

4) All Utility locations are approximate, and are based on information from the project's Test Hole Data Sheet. Utility information shown is specific to its corresponding Utility Test Hole location.

5) Utility Test Hole Information is located on Sheet 1H.

6) Utility clearance dimensions shown assume the use of concrete Storm Sewer Pipe and corresponding pipe thicknesses (worst case scenario).

7) Contractor to verify the condition of all existing storm structures (manholes) that are to be modified and connected by proposed storm drain pipes.

PROJECT MANAGER Perry Eisenach, P.E. - City of Winchester (540) 667-2085
SURVEYED BY, DATE Sidney Thomas, L.S. - Rinker Design Associates (703) 368-7373, October 2014
DESIGN BY John A. Glometti, P.E. - Rinker Design Associates (703) 334-0060
SUBSURFACE UTILITY BY, DATE Matthew Bansiem - Mid Atlantic Utility Locating (703) 378-0100, August 2014

Office Locations
Corporate Headquarters: 207 Maple Avenue Boulevard, Suite 100, Fairfax, VA 22030, Phone: (703) 334-0060, Fax: (703) 273-2020
Northern Virginia Office: 207 Maple Avenue Boulevard, Suite 100, Fairfax, VA 22030, Phone: (703) 334-0060, Fax: (703) 273-2020
Richmond Office: 2001 Bayberry Road, Suite 100, Richmond, VA 23227, Phone: (804) 262-8100, Fax: (804) 262-8101
Rinker Design Associates, P.C.
Civil Engineering • Surveying • Environmental Engineering • Right of Way Services
GDA SHOOTING SERVICE S.A.S.

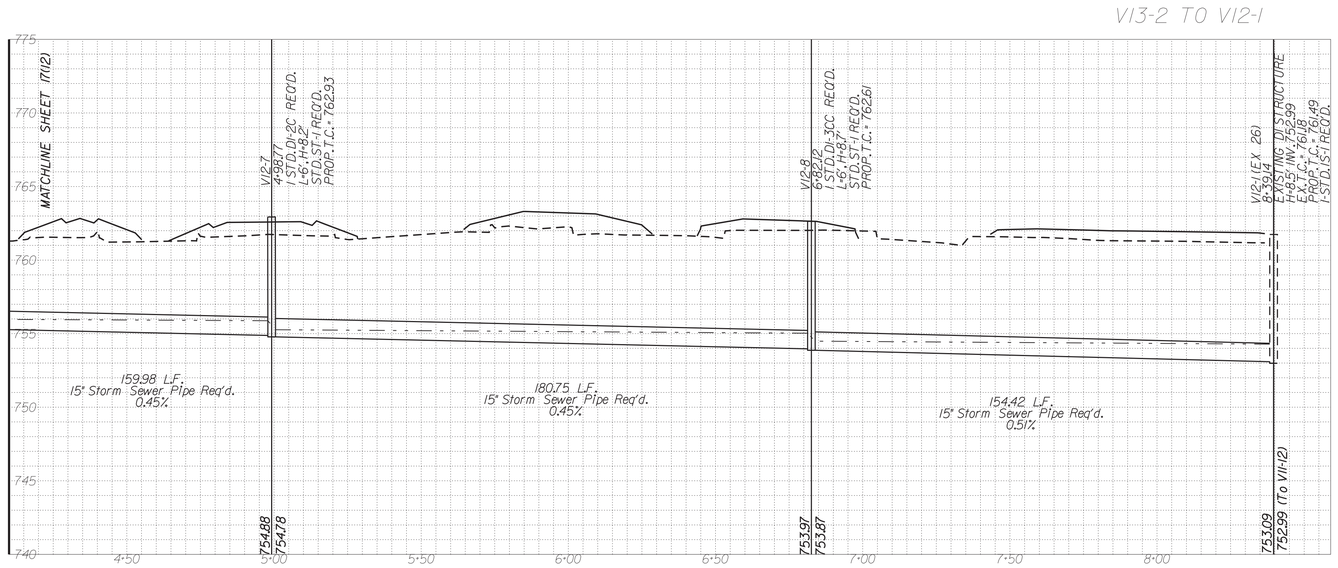

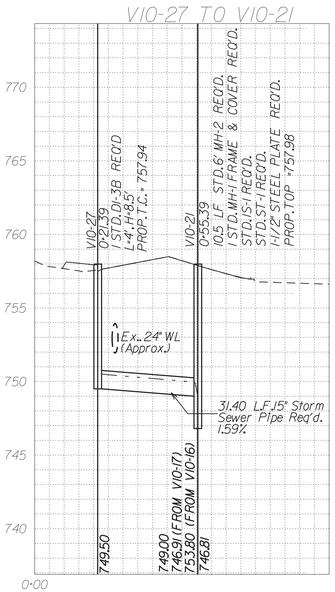

REVISED	STATE	STATE ROUTE	STATE PROJECT	SHEET NO.
	VA.	11	U000-138-R04 C501	17(13)

COMMONWEALTH OF VIRGINIA
BRIAN P. KOMAR
Lic. No. 045169
PROFESSIONAL ENGINEER

Brian Komar
2020.02.14 10:55:34-05'00'

Rinker Design Assoc., P.C.
Fredericksburg, Virginia
DRAINAGE ENGINEER

DESIGN FEATURES RELATING TO CONSTRUCTION OR TO REGULATION AND CONTROL OF TRAFFIC MAY BE SUBJECT TO CHANGE AS DEEMED NECESSARY BY THE DEPARTMENT

SCALE
V: 1"=5'
H: 1"=25'
0 25' 50'

Legend

- DENOTES PROP. GRADE
- DENOTES EX. GRADE
- DENOTES HGL
- DENOTES EX. STR. OR PIPE

Notes:

1) Storm Sewer Pipes shown on the profile are represented by their inner diameter dimension, and do not include wall thicknesses.

2) Only existing Utilities, at the time of the survey, are shown on the Storm Sewer Pipe Profiles. These profiles do not reflect either planned re-location of Utilities or proposed Utilities. The Contractor is also directed to any Utility Plans that may exist as part of this plan assembly.

3) Not all Utilities are shown on the Storm Sewer Profiles, only those Utilities listed on the Utility Test Hole Data Sheet with the addition of Sanitary Sewer line crossings.

4) All Utility locations are approximate, and are based on information from the project's Test Hole Data Sheet. Utility information shown is specific to its corresponding Utility Test Hole location.

5) Utility Test Hole Information is located on Sheet 1H.

6) Utility clearance dimensions shown assume the use of concrete Storm Sewer Pipe and corresponding pipe thicknesses (worst case scenario).

7) Contractor to verify the condition of all existing storm structures (manholes) that are to be modified and connected by proposed storm drain pipes.

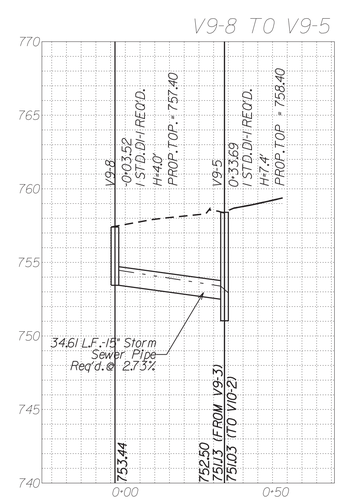

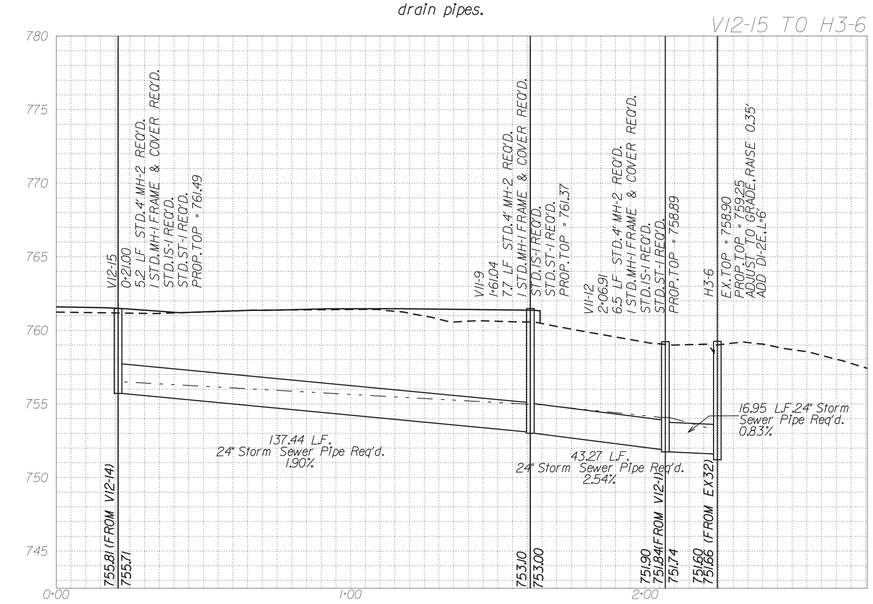

ALLOWABLE TYPE OF STORM SEWER PIPE (UNLESS OTHERWISE SHOWN ON PLANS) (SEE ROAD AND BRIDGE STANDARD PC-1 FOR HEIGHT OF COVER LIMITATIONS FOR EACH TYPE)									
LOCATION	CONCRETE	CORRUGATED STEEL ALUMINUM COATED TYPE 2 FULLY CONCRETE LINED	ALUMINUM COATED TYPE 2 STEEL SPIRAL RIB	POLYMER COATED (10/10) CORRUGATED STEEL SPIRAL RIB	POLYMER COATED (10/10) CORRUGATED STEEL DOUBLE WALL (SMOOTH INTERIOR)	ALUMINUM SPIRAL RIB	POLYVINYLCHLORIDE (PVC) RIBBED PIPE (SMOOTH INTERIOR)	POLYETHYLENE (PE) CORRUGATED TYPE S	POLYETHYLENE (PP) TYPE D or S
Valley Avenue Tevis Street	X				X		X	X	X

Rinker Design Associates, P.C.
Civil Engineering - Surveying - Land Planning
Transportation - Environmental
Right of Way Services

Office Locations
9385 Discovery Boulevard, Suite 200, Manassas, VA 20109, Phone: (703) 368-7373, Fax: (703) 257-5443
4301 Dominion Boulevard, Suite 100, Glen Allen, VA 23060, Phone: (804) 612-0665, Fax: (804) 612-0668
927 Maple Grove Drive, Suite 105, Fredericksburg, VA 22407, Phone: (540) 548-4470, Fax: (540) 548-4471
www.RDAcivil.com

PROJECT MANAGER Perry Eisenach,P.E.-City of Winchester (540)667-2085
SURVEYED BY, DATE Sidney Thomas,L.S.-Rinker Design Associates (703)368-7373,October 2014
DESIGN BY Adam Welschenbach,P.E.-Rinker Design Associates (703)334-9300
SUBSURFACE UTILITY BY, DATE Matthew Ranslem - Mid Atlantic Utility Locating (703)378-0100,August 2014

REVISED	STATE	STATE ROUTE	STATE PROJECT	SHEET NO.
	VA.	11	U000-138-R04 P101,R201,C501	18(1)

DESIGN FEATURES RELATING TO CONSTRUCTION OR TO REGULATION AND CONTROL OF TRAFFIC MAY BE SUBJECT TO CHANGE AS DEEMED NECESSARY BY THE DEPARTMENT

GENERAL NOTES - TRAFFIC SIGNALS

1 All work shall be in accordance with the current edition of the Manual of Uniform Traffic Control Devices (MUTCD),The Virginia Supplement to the MUTCD,the current edition of the VDOT Road and Bridge Specifications,the current edition of the VDOT Road and Bridge Standards,and all special provisions in effect at the time the signal plan is approved.

2 The following items and operations shall conform to the standard listed below:

Signal Pole	MP-3
Signal Pole Foundation	PF-8
Conduit Installation	ECI-1 or Bored
Signal Head Hangers	SM-3
Sign Hanger	SMD-2
Junction Box	JB-S1,JB-S2,JB-S3
Controller Cabinet Foundation	CF-1
Electrical Service	SE-6

3 Five (5) working days prior to commencing traffic signal work at any location within City of Winchester,the Contractor must notify the applicable City permits section in writing with the name,daytime phone numbers,and emergency phone numbers for the Contractor, giving the location of the work site including street names,route numbers,permit number,type,and details of construction and work schedule.

4 Conduit systems shall be bonded in accordance with Section 700 of the VDOT Road & Bridge Specifications.

5 All parts of the signal to be installed shall be a minimum of 1' inside the right of way line or signal easement,unless directed by the City's Engineer.

6 Following implementation of base signal timings the Contractor shall have a qualified representative present to monitor traffic flow and adjust timings as directed by City staff as necessary for a minimum of two consecutive morning and evening rush hour periods.

7 For installation of conduits,no open cut will be allowed in the roadway surface or any other paved or concrete areas.

8 The Contractor shall perform test pits and exercise care in placement of signal equipment to preclude utility conflicts. If adjustments in pole locations are required,the Contractor shall notify the City and the Engineer prior to commencing work.

9 6' x 40' Video detector zones shall be implemented and shall begin 3' in front of the stop line.

10 Utilities shown on the plans are not guaranteed to be complete or accurate.The Contractor shall be responsible for ensuring that all utilities within the project limits are identified and located before beginning work.The Contractor shall contact Miss Utility of Virginia at 1-800-522-7001,48 hours prior to any construction activities.Contractor shall coordinate with utility companies as to the location of existing and approved plans of future utility lines. Any disruption of any utility service is the responsibility and solely the cost of the Contractor.

11 Contractor shall not impact existing utilities when installing any component of the proposed signal.Any disruption to utility service shall be solely the cost of the Contractor to repair or replace.

12 New LED traffic signal heads and overhead traffic signal signage shall be covered with a durable non-transparent cover upon installation. The Contractor shall maintain covers until the new traffic signal system is operational,unless directed by the City.

13 Maintenance and repair of the traffic signal and any necessary modifications during construction is the sole responsibility and cost of the Contractor until project completion.

14 All unused wires in the signal heads shall be capped individually with crimp type caps.

15 The Contractor shall label all spare wires in the controller cabinet,in accordance with section 700.04(g) of the VDOT Road and Bridge Specifications.

16 Site preparation and grading shall be incidental to signal installation.

17 The Contractor shall verify mast arms lengths and signal head lane coverage prior to the installation of signal pole foundations.

18 The cost of Equipment Grounding Conductor (*8 AWG EGC) is included in the cost of conduits.

19 Elongated arrows shall be in accordance with MUTCD and VDOT Road and Bridge Specifications.

20 Limits of proposed pavement markings are approximate and shall be modified in the field to ensure that proposed pavement markings continue until existing pavement markings can be matched.

21 Any pavement markings that will conflict with the proposed pavement markings shall be completely eradicated. Pavement Markings shall be modified to reflect the markings shown on this plan when the signal is installed.

22 All signal heads shall have Aluminum backplates.Backplate hardware shall be stainless steel.

23 The Contractor shall be responsible for providing and maintaining electrical service to the controller at all times.The Contractor shall be responsible for all costs associated with providing/continuing electrical service to the traffic signal until project completion.

24 Traffic signal heads shall be cast aluminum.

25 Hanger assembly brackets for angled traffic signal heads shall be installed such that back plates can be installed without alteration or modification.

26 The Contractor shall be responsible for maintaining detection on all approaches of the intersection at all times and throughout all phases of construction.Contractor shall utilize Video detection as approved by the City.

27 No junction boxes shall be installed in paved shoulder,sidewalk, or multi-purpose trail.

28 Junction box covers shall have the letters "TRAF" cast in the top surface depression for all traffic signal related junction boxes containing cable with less than 50 volts.All other junction box covers shall have "ELEC" cast in the top surface depression.

29 All breakaway poles shall have breakaway fuses.

30 Dimensions used for locating equipment (such as signal head assemblies, signs,etc.) on mast arms are measured to the center of the symbols used to indicate the equipment.

31 Prior to construction and before purchase of any equipment required for the signal, the Contractor is to provide the City with shop drawings of all required equipment.Contractor will also provide a list of product data for these items to the City Engineer to ensure that these items meet all current standards.

32 All poles and controllers shall be field staked by the Contractor and inspected by the Engineer and Contractor per Section 700.04 prior to installation of foundations.

33 All Proposed Mast Arms,Mast Arm Poles,and Pedestrian Pedestals shall be powder coated black to match existing conditions.

VIDEO DETECTION NOTES

The following existing singalized intersections are located within the project limits but will not be phsycially impacted by construction or modified,but shall be the contractors responsibility to verify or adjust the Video Detection Zones,upon completion of the Final Pavement Markings:

1.Valley Ave (Rte 11) and Brookfield Drive
2.Valley Ave (Rte 11) and Lake Drive
3.Valley Ave (Rte 11) and Middle Road

STANDARD TRAFFIC SIGNAL LEGEND

PLAN ITEM		PLAN SYMBOL PROPOSED	PLAN SYMBOL EXISTING
Metal Signal Pole & Foundation and Mast Arm (As noted in Signal Pole Legend)			
Pedestal Pole and Foundation (St'd.PF-2)			
Pedestal Pole and Foundation (St'd.PA-3)			
Traffic Signal Head	w/ Backplate		
	w/o Backplate		
Pedestrian Signal Head			
Pedestrian Pushbutton & Sign		P.B.	P.B.
Traffic Signal Sign	Mast Arm or Span Wire Mt'd.		
	Pole Mounted		E
Emergency Vehicle Pre-emption (EVP) Sensor	w/ Conf.Light		
	w/o Conf.Light		
Video Detection Camera			
Junction Box (St'd.as noted on plans)			J
Signal Luminaire (250 W) and Arm			
Signal Luminaire (400 W) and Arm			
Loop Detector (Size as noted on plans)		6' x 20'	6' x 20'
Video Detection Zone (Size as noted on plans)		VDZ 6' x 20'	VDZ 6' x 20'
Conduit			

PLAN ITEM		PLAN SYMBOL PROPOSED	PLAN SYMBOL EXISTING
Electrical Service Meter		SM	SM
Electrical Service Safety Switch (Disconnect)		SD	SD
Controller Cabinet	Ground Mounted	C	C
	Pole Mounted	C	C
Master Controller Cabinet	Ground Mounted	MC	MC
	Pole Mounted	MC	MC
Controller Cabinet & Foundation	Std.CF-1	C 1	C 1
	Std.CF-3	C 3	C 3
	Std.CF-4	C 4	C 4
Master Controller Cabinet & Foundation	Std.CF-1	MC 1	MC 1
	Std.CF-3	MC 3	MC 3
	Std.CF-4	MC 4	MC 4
Uninterruptible Power Supply Cabinet			

LABELS

Signal Pole or Controller	A	Proposed Signal Head	2	Signal Phasing	Ø2	Sign	S-1
Cable and Conduit	A	Existing Signal Head	2	Pedestrian Phasing	P2	Video Detection Camera	VDC-1
Junction Box	S3	Proposed Pedestrian Signal Head	P2			Emergency Preemption Detector	EVP-1
		Existing Pedestrian Signal Head	P2				

INDEX OF SHEETS

Sheet No.:	Sheet Description:
18(1)	Index of Sheets,General Notes & Legend
18(2)	Not Used
18(3)	Traffic Signal Plan - Valley Ave (Rte.11) & Tevis St

TRAFFIC CONTROL DEVICE PLANS
TRAFFIC SIGNAL PLAN
Index of Sheets,General Notes & Legend

CITY OF WINCHESTER

PROJECT	SHEET NO.
U000-138-R04	18(1)

PROJECT MANAGER Perry Eisenach P.E. - City of Winchester (540).667-2085
SURVEYED BY, DATE Sidney Thomas L.S. - Rinker Design Associates (703).368-7373, October 2014
DESIGN BY Adam Welschenbach P.E. - Rinker Design Associates (703).334-9300
SUBSURFACE UTILITY BY, DATE Matthew Ronsiem - Mid Atlantic Utility Locating (703).378-0100, August 2014

Rinker Design Associates, P.C.
Civil Engineering - Surveying - Environmental
Transportation - Land Development - Right of Way Services
Office Locations
Manassas, Virginia 20110 - 8609 Sudley Road, Suite 100
Sterling, Virginia 20164 - 46790 Harry Byrd Hwy, Suite 130
Winchester, Virginia 22601 - 107 N. Kent Street, Suite 203

Existing Signals

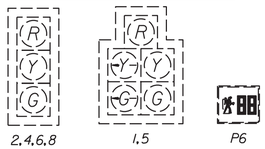

Proposed Signals

SP-8

P2,P6,P8

JUNCTION BOX LEGEND

- (S1) Denotes St'd.JB-S1
- (S2) Denotes St'd.JB-S2
- (EX) Denotes Exist.JB To Remain

CONSTRUCTION NOTES:

1. Remove Existing Pedestrian Pedestal and foundation
2. Remove Existing Junction Box and restore area to finished grade
3. Remove Existing Pedestrian Signal head

Existing Signs

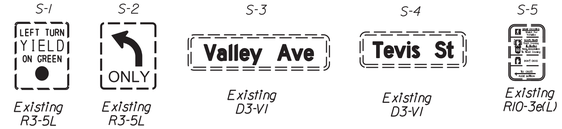

Proposed Signs

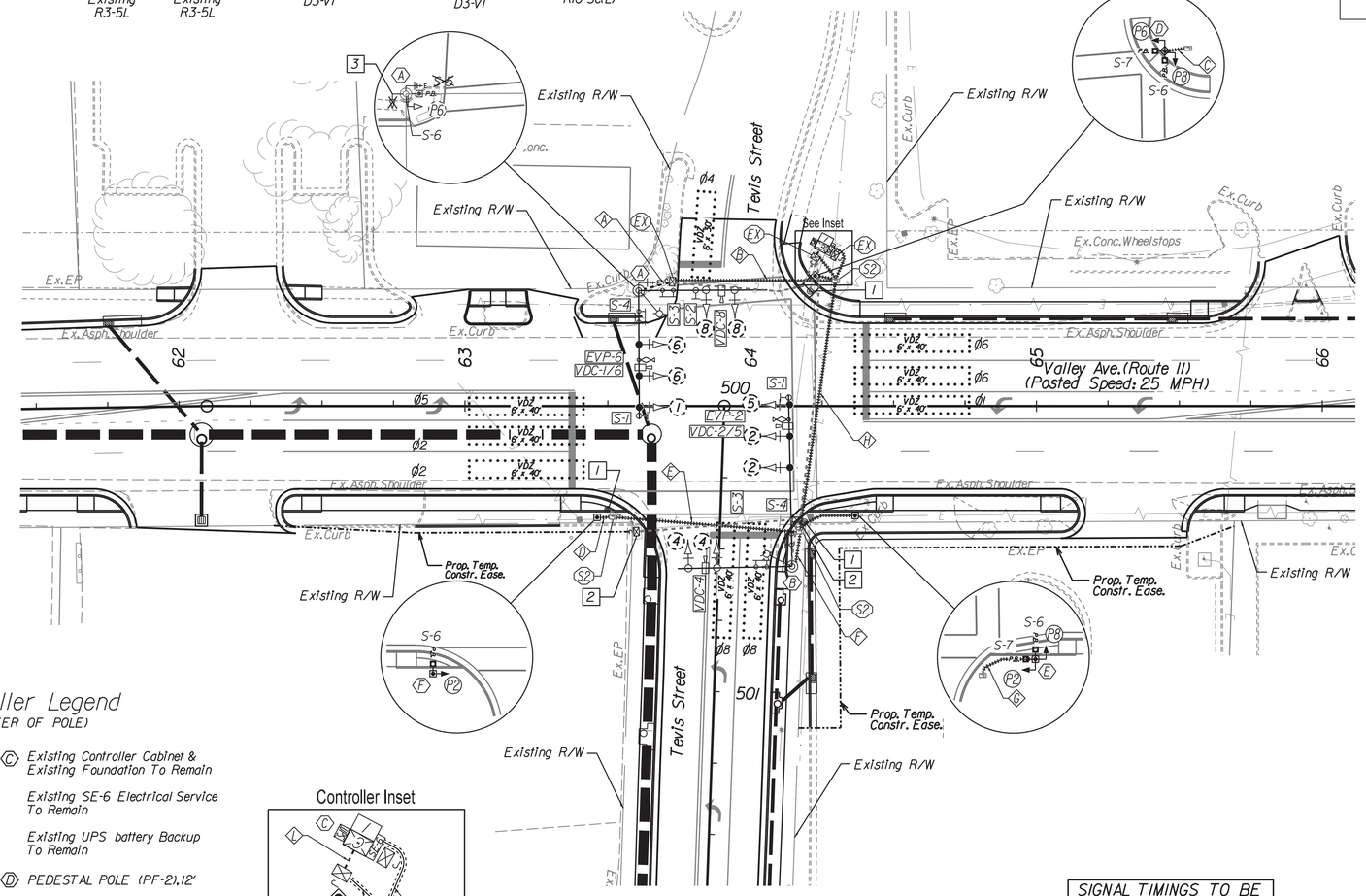

Signal Pole & Controller Legend

(ALL DIMENSIONS ARE TO CENTER OF POLE)

(A) EXISTING COMBINATION MAST ARM POLE WITH LUMINAIRE ARM
And Foundation to Remain
45' Arm Perpendicular to Valley Ave.Constr.℄
Distance From Stop Bar = 78'
Signal Placement: 19',30',41'
Sign Placement: 9',44'
VDC Placement: 28'
EVP Detector Placement: 26'

45' Arm Parallel to Valley Ave.Constr.℄
Distance From Stop Bar = 85'
Signal Placement: 24',41'
Sign Placement: 10',22'
VDC Placement: 34'

(B) EXISTING COMBINATION MAST ARM POLE WITH LUMINAIRE ARM
And Foundation to Remain
60' Arm Perpendicular to Valley Ave.Constr.℄
Distance From Stop Bar = 75'
Signal Placement: 34',45',56'
Sign Placement: 20',59'
VDC Placement: 47'
EVP Detector Placement: 48'

40' Arm Parallel to Valley Ave Constr.℄
Distance From Stop Bar = 105'
Signal Placement: 25',37'
Sign Placement: 11'
VDC Placement: 19'

(C) Existing Controller Cabinet & Existing Foundation To Remain

Existing SE-6 Electrical Service To Remain

Existing UPS battery Backup To Remain

(D) PEDESTAL POLE (PF-2).12'

(E) PEDESTAL POLE (PF-2).12'

(F) PEDESTAL POLE (PF-2).12'

Controller Inset

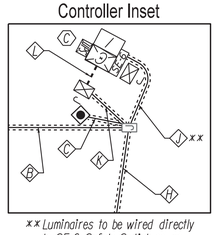

xx Luminaires to be wired directly to SE-6 Safety Switch on an Independent breaker/circuit from the controller.

SIGNAL TIMINGS TO BE PROVIDED BY THE CITY OF WINCHESTER

Phasing Diagram

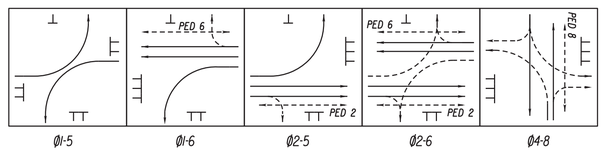

Ø1-5 Ø1-6 Ø2-5 Ø2-6 Ø4-8

Preemption Phasing Diagram

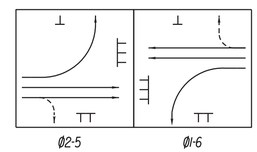

Ø2-5 Ø1-6

COMMONWEALTH OF VIRGINIA
ADAM D. WELSCHENBACH
Lic. No. 044359
PROFESSIONAL ENGINEER
Adam Welschenbach 2020.02.14 10:06:05 -05'00'
Rinker Design Associates, P.C.
Manassas, Virginia
Traffic Engineer

REVISED	STATE	ROUTE	PROJECT	SHEET NO.
	VA.	11	U000-138-R04 P101,R201,C501	181(3)

DESIGN FEATURES RELATING TO CONSTRUCTION OR TO REGULATION AND CONTROL OF TRAFFIC MAY BE SUBJECT TO CHANGE AS DEEMED NECESSARY BY THE DEPARTMENT

CABLE AND CONDUIT LEGEND

(A) Existing 3" Conduit
3-14/7c (Heads 1,6,8)
1-14/4c (Ped 6)
1-14/2c(S)(PB 6)
1-#8 EGC

Existing 3" Conduit
2-VDC
1-Antenna Cable
1-EVP Cable
1-14/4C EVP Light
1-8/2c (Lighting)
1-#8 EGC

Existing 3" Conduit (Spare)

(B) Bored 3" Conduit
3-14/7c (Heads 1,6,8)
1-14/4c (Ped 6)
1-14/2c(S)(PB 6)
1-#8 EGC

Bored 3" Conduit
2-VDC
1-Antenna Cable
1-EVP Cable
1-14/4c EVP Light
1-8/2c (Lighting)
1-#8 EGC

(C) 2" Conduit
2-14/4c (Ped 6,8)
2-14/2c(S)(PB 6,8)
1-#8 EGC

(D) 2" Conduit
1-14/4c (Ped 2)
1-14/2c(S)(PB 2)
1-#8 EGC

(E) Bored 3" Conduit
1-14/4c (Ped 2)
1-14/2c(S)(PB 2)
1-#8 EGC

Conduit Note:
Cut Existing 3" Conduit and Couple to Proposed Conduit

(F) (See Conduit Note)
3" Conduit
3-14/7c (Heads 2,5,4)
1-8/2c (Lighting)
1-#8 EGC

(See Conduit Note)
3" Conduit
2-VDC
1-EVP Cable
1-14/4c EVP Light
1-#8 EGC

(G) 2" Conduit
2-14/4c (Ped 2,8)
2-14/2c(S)(PB 2,8)
1-#8 EGC

(H) Bored 3" Conduit
3-14/7c (Heads 2,4,5)
3-14/4c (Ped 2,8)
3-14/2c(S)(PB 2,8)
1-#8 EGC

Bored 3" Conduit
2-VDC
1-EVP Cable
1-14/4c EVP Light
1-8/2c (Lighting)
1-#8 EGC

(J) 1½" Conduit
2-8/2c (Lighting)

(K) 4" Conduit
6-14/7c (Heads 1,2,4,5,6,8)
6-14/4c (Ped 2,6,8)
6-14/2c(S)(PB 2,6,8)
1-#8 EGC

4" Conduit
4-VDC
1-Antenna Cable
2-EVP Cable
2-14/4c EVP Light
1-#8 EGC

(L) Existing 4" Conduit
6-14/7c (Heads 1,2,4,5,6,8)
6-14/4c (Ped 2,6,8)
6-14/2c(S)(PB 2,6,8)
1-#8 EGC

Existing 4" Conduit
4-VDC
2-EVP Cable
2-14/4c EVP Light
1-#8 EGC

Existing 2" Conduit
1-Antenna Cable
1-#8 EGC

EGC - Equipment Grounding Cable
(VDC) - Denotes Video Detector Cable
(M) - Denotes Metal Conduit

Color Sequence Chart

	SIGNAL	PHASES 1	2	3	4	5	6	7	8	COMBINATIONS 1-5	1-6	2-5	2-6	4-8	FLASH
SIGNALS	1	R/G								R/G	G/G		G/		R
	2		G												Y
	4				G									G	R
	5					R/G				R/G		G/G	G/		R
	6						G				G		G		Y
	8								G					G	R
	P2		Walk									Walk	Walk		Blank
	P6						Walk				Walk		Walk		Blank
	P8								Walk					Walk	Blank

NOTE: Blank Space Denotes Red Indication

TRAFFIC CONTROL DEVICE PLANS

TRAFFIC SIGNAL PLAN

Valley Ave (Rte.11) & Tevis St

CITY OF WINCHESTER

SCALE	PROJECT	SHEET NO.
0 25' 50'	U000-138-R04	181(3)

PROJECT MANAGER Perry Eisenach, P.E. - City of Winchester (540).667-2085
SURVEYED BY, DATE Sidney Thomas, L.S. - Rinker Design Associates (703).368-7373, October 2014
DESIGN BY Adam Weischenbach, P.E. - Rinker Design Associates (703).334-9300
SUBSURFACE UTILITY BY, DATE Matthew Ransiem - Mid Atlantic Utility Locating (703).378-0100, August 2014

SIGNING AND PAVEMENT MARKING PLAN

REVISED	STATE	STATE ROUTE	STATE PROJECT	SHEET NO.
	VA.	11	U000-138-R04 P101, R201, C501	19

DESIGN FEATURES RELATING TO CONSTRUCTION OR TO REGULATION AND CONTROL OF TRAFFIC MAY BE SUBJECT TO CHANGE AS DEEMED NECESSARY BY THE DEPARTMENT

Office Locations
Corporate Headquarters: 4501 Daly Drive, Suite 400, Chantilly, VA 20151, Phone: (703) 378-9300, Fax: (703) 378-9305
Northern Virginia: 4651 Daly Drive, Suite 100, Chantilly, VA 20151, Phone: (703) 378-9300, Fax: (703) 378-9305
Richmond: 4501 Daly Drive, Suite 100, Chantilly, VA 20151, Phone: (703) 378-9300, Fax: (703) 378-9305
Rinker Design Associates, P.C.
Civil Engineering • Surveying • Transportation Planning
Transportation Engineering • Environmental
Right of Way Services

STANDARD SIGN LEGEND

PLAN ITEM	PLAN SYMBOL PROPOSED	PLAN SYMBOL EXISTING
Single Post Sign Support		
Double Post Sign Support		
Triple Post Sign Support		
Flashing Beacon		
O/H Cantilever Sign Support		
O/H Span Sign Support		

SIGN CALL-OUTS

Existing Sign to Remain or to be Relocated — OVERHEAD 95

Existing Sign to be Removed — OVERHEAD 95

Proposed Sign Panel — OVERHEAD 95

SIGN LABELS

Proposed Sign Assemblies

denotes Sign Assembly No. — 2808 / 3 — denotes Text No.

Relocated Sign Assemblies

denotes Sign Assembly No. — 2808 / 3 — denotes Text No.

Sign Relocation or Payable Sign Disposal/Salvage

denotes Existing Sign Structure and/or Sign Panel Type — GM / A

STRUCTURE & SIGN PANEL
GM - Ground Mounted
OM - Overhead Mounted
CM - Cantilever Mounted
PM - Pole Mounted

SIGN PANEL
SP-GM - Ground Mounted Sign Panel
SP-OH - Overhead Mounted Sign Panel

STRUCTURE ONLY
ST-GM - Ground Mounted

denotes Action and Measurement & Payment Item
A - Remove & Dispose Sign Structure
B - Remove & Dispose O/H Sign Structure
C - Relocate Sign Panel
D - Remove & Dispose of Sign Panel

Signs noted on plans to be removed that do not have an accompanying sign label shall not be measured separately for payment. Removal and disposal for such signs shall be incidental to other contract items.

ACTION AND MEASUREMENT OF ITEMS:

A. REMOVE AND DISPOSE SIGN STRUCTURE AND SIGN PANEL
Scope of work to include the removal and disposal of sign panels, posts and foundations to at least two feet below existing ground line, backfilling and restoration (top soiling, and seeding), and all materials, labor, tools, equipment and incidentals necessary to complete the work. Measurement shall be in units of Each.

B. REMOVE AND DISPOSE OVERHEAD SIGN STRUCTURE
Scope of work to include the removal and disposal of sign panels, sign strucuture and foundations to at least two feet below existing ground line, backfilling and restoration (top soiling, and seeding), and all materials, labor, tools, equipment and incidentals necessary to complete the work. Measurement shall be in units of Each.

C. RELOCATE EXISTING SIGN PANEL
Scope of work to include removal and storage of sign panels, disposal of existing posts, removal of foundations to at least 2 feet below existing ground line as required, backfilling and restoration (topsoiling, and seeding), refurbishing framing members, furnishing and installing necessary back panels, erecting existing sign panel to new posts (posts to be measured separately), and for all materials, labor, tools, equipment and incidentals necessary to complete the work. Measurement shall be in units of each.

D. REMOVE AND DISPOSE OF SIGN PANEL
Scope of work to include the removal and disposal of sign panels from existing sign structure and for all materials, labor, tools, equipment and incidentals necessary to complete the work. Measurement shall be in units of each.

GENERAL NOTES - PAVEMENT MARKINGS

1. All proposed pavement markings shall be in accordance with the current edition of each of the following and any revision thereof at the time the contract was ratified:
   A. Manual on Uniform Traffic Control Devices (MUTCD)
   B. The Virginia Supplement to the Manual on Uniform Traffic Control Devices
   C. The City of Winchester Standards and Construction Requirements
   D. The Virginia Department of Transportation Road and Bridge Specifications
   E. The Virginia Department of Transportation Road and Bridge Standards
2. Existing pavement markings that conflict with the proposed pavement markings, shall be removed via roadway overlay or completely eradicated.
3. Limits of proposed pavement markings are approximate and shall be modified in the field to ensure that proposed pavement markings continue until existing pavement markings can be matched.
4. Elongated arrows shall be in accordance with MUTCD and City of Winchester and/or VDOT Road and Bridge Specifications.
5. Raised markers are not currently installed within the project limits, therefore Raised markers will not be included as part of this project.

GENERAL NOTES - SIGNING

1. Unless otherwise approved by the Engineer, existing traffic signs, which are to be removed, shall remain in place until the new sign structure and critical message are in place.
2. Proposed signs and sign structures shall not impact underground existing utilities. Contractor is responsible for any disruption in Utility Service due to digging for sign structures. If Proposed sign location will cause impact to existing Utility Service, sign location shall be relocated at the approval of the engineer, at no additional cost.
3. All underground and overhead utilities shown on these plans are approximate only and may not be complete. At least 72 hours prior to beginning signing work, Contractor shall contact "Miss Utility of Virginia" at 1-800-552-7001 in order to determine the extent, location, and identify all of the utilities within the work area. If the Contractor perceives a conflict between utilities and the proposed signs, the Contractor shall notify the Engineer immediately so the conflict may be reviewed. The Contractor shall be responsible for repairing or replacing, at their own expense, any existing utilities, pavement, concrete items, etc. that are damaged or disturbed during construction.
4. The removal or modification of existing sign panels, structures, or foundations shall conform to Section 510 of the VDOT Road and Bridge Specifications.
5. Unless otherwise indicated on the plans, all breakaway sign structures shall be located within 25' of the sign's indicated location or as directed by the Engineer, and within the Existing or proposed Right of Way.
6. All existing and proposed sign locations are approximate and shall be field verified by the contractor. All proposed sign locations shall be staked by the contractor and approved by the engineer prior to installation.
7. All proposed signs located adjacent to pedestrian walkways and paths shall be mounted such that a minimum of 7 ft clearance exists from the walking surface to the bottom of the lowest sign panel.

INDEX OF SHEETS

Sheet No.:	Sheet Description:
19	Index of Sheets & Legend
19(2A)	Sign Schedule
19(3) - 19(16)	Signing & Pavement Marking Plans

TRAFFIC CONTROL DEVICE PLANS
SIGNING AND PAVEMENT MARKING PLAN
INDEX OF SHEETS; GENERAL NOTES &
CITY OF WINCHESTER

PROJECT	SHEET NO.
U000-138-R04	19

PROJECT MANAGER Perry Elsenach P.E. - City of Winchester (540) 667-2085
SURVEYED BY, DATE Sidney Thomas L.S. - Rinker Design Associates (703) 368-7373 October 2014
DESIGN BY Adam Welschenbach P.E. - Rinker Design Associates (703) 334-9300
SUBSURFACE UTILITY BY, DATE Matthew Ronsiem - Mid Atlantic Utility Locating (703) 378-0100 August 2014

Permanent Sign Schedule

TEXT NO.	TEXT	SIGN ASSEMBLY NO(s).	MUTCD STD.	PANEL SIZE WIDTH	PANEL SIZE HEIGHT	QTY.	SIGN AREA (S.F.) PER SIGN	SIGN AREA (S.F.) PER ASSEMBLY	SIGN STRUCT. STD.	SIGN STRUCT. QTY.	REMARKS
1	SHARE THE ROAD	401, 701, 705, 802	Existing W11-1 Existing W16-1P	--- ---	--- ---	4 4	--- ---	---	STP-1 2 1/2 Inch 12 GA.	4	STP-1 Foundation Type A or E Req'd.
2	KERNSTOWN BATTLEFIELD VIRGINIA CIVIL WAR TRAILS	402	Existing Existing	--- ---	--- ---	1 1	--- ---	---	STP-1 2 Inch 14 GA.	1	STP-1 Foundation Type A,D or F Req'd.
3	VALET Bus Route Map	403, 501, 601, 604, 702, 703, 1001, 1103, 1105, 1201, 1301	Existing	---	--	11	---	---	STP-1 2 Inch 14 GA.	11	STP-1 Foundation Type A,D or F Req'd.
4	SNOW EMERGENCY ROUTE	602, 603, 1104, 1203	Existing	---	---	4	---	---	STP-1 2 Inch 14 GA.	4	STP-1 Foundation Type A,D or F Req'd.
5	SPEED LIMIT 35	605, 606, 901	Existing R2-1	---	---	3	---	---	STP-1 2 Inch 14 GA.	3	STP-1 Foundation Type A,D or F Req'd.
6	ONE WAY	1202	Existing R6-1	---	---	1	---	---	STP-1 2 Inch 14 GA.	1	STP-1 Foundation Type A,D or F Req'd.
7	TRAVEL LODGE THURSDAY NOON PICCADILLY BREW PUB TUESDAY 6:00 PM	1204	Existing Existing Existing	--- --- ---	--- --- ---	1 1 1	--- --- ---	---	STP-1 2 1/2 Inch 12 GA.	1	STP-1 Foundation Type A or E Req'd.
8	NO LOITERING AFTER 10 PM	704	Existing	---	---	1	---	---	STP-1 2 Inch 14 GA.	1	STP-1 Foundation Type A,D or F Req'd.
9	Valley Wentworth Wentworth Valley STOP	801	Existing D3-1 Existing D3-1 Existing R1-1	--- --- ---	--- --- ---	1 1 1	--- --- ---	---	STP-1 2 1/2 Inch 12 GA.	1	STP-1 Foundation Type A or E Req'd.
10	STOP	1101	Existing R1-1	---	---	1	---	---	STP-1 2 Inch 14 GA.	1	STP-1 Foundation Type A,D or F Req'd.
11	DO NOT ENTER	1102	Existing R5-1	---	---	1	---	---	STP-1 2 Inch 14 GA.	1	STP-1 Foundation Type A,D or F Req'd.
12	628	1302	Existing M1-V2a Existing M5-1	--- ---	--- ---	1 1	--- ---	--- ---	STP-1 2 Inch 14 GA.	1	STP-1 Foundation Type A,D or F Req'd.
13	ADOPT-A-STREET Cooters Ice Cream	1402	Existing Custom	---	---	1	---	---	STP-1 2 Inch 14 GA.	1	STP-1 Foundation Type A,D or F Req'd.
14	Peppertree Lewis STOP	1401	Existing D3-1 Existing D3-1 Existing R1-1	--- --- ---	--- --- ---	1 1 1	--- --- ---	---	STP-1 2 1/2 Inch 12 GA.	1	STP-1 Foundation Type A or E Req'd.
15	SPEED LIMIT 25	1002	Existing R2-1	---	---	1	---	---	STP-1 2 Inch 14 GA.	1	STP-1 Foundation Type A,D or F Req'd.

NOTES:
1) All signs shall be orientated as shown on the plans.
2) Sign color combinations shall be in accordance with the FHWA SHS Book and the 2011 Virginia SHS Book or as noted in the plans.
3) All positive contrast guide and specific service signs shall utilize fabrication letter type L-3 or L-4 unless otherwise noted in the remarks. All other signs shall utilize fabrication letter type L-1 or L-2 unless otherwise noted in the remarks.
4) All black sheeting shall be non-reflective.
5) Sign Structures shall be installed per the noted Sign St'd.
6) All St'd. STP-1 structures to be single post unless otherwise noted.

COMMONWEALTH OF VIRGINIA
ADAM D. WELSCHENBACH
Lic. No. 044359
PROFESSIONAL ENGINEER

Adam Welschenbach 2020.02.14 10:05:44 -05'00'

Rinker Design Associates, P.C.
Manassas, Virginia
Traffic Engineer

REVISED	STATE	STATE ROUTE	STATE PROJECT	SHEET NO.
	VA.	11	U000-138-R04 P101, R201, C501	19(2A)

DESIGN FEATURES RELATING TO CONSTRUCTION OR TO REGULATION AND CONTROL OF TRAFFIC MAY BE SUBJECT TO CHANGE AS DEEMED NECESSARY BY THE DEPARTMENT

TRAFFIC CONTROL DEVICE PLANS
SIGNING AND PAVEMENT MARKING PLAN
SIGN SCHEDULE
CITY OF WINCHESTER

PROJECT	SHEET NO.
U000-138-R04	19(2A)

Office Locations
Manassas, Virginia 10900 Prince William Parkway Suite 100 Manassas, VA 20110 Phone: (703) 334-9300 Fax: (703) 335-0317
Fairfax, Virginia 4031 Chain Bridge Road Suite 100 Fairfax, VA 22030 Phone: (703) 591-2800 Fax: (703) 591-2801
Winchester, Virginia 2401 Papin Street Suite 100 Winchester, VA 22601 Phone: (540) 722-0220 Fax: (540) 722-0221
Rinker Design Associates, P.C.
Civil Engineering • Surveying • Environmental Transportation • Land Development • Right of Way Services

PROJECT MANAGER Perry Elsenach P.E. - City of Winchester (540).667-2085
SURVEYED BY, DATE Sidney Thomas L.S. - Rinker Design Associates (703).368-7373, October 2014
DESIGN BY Adam Welschenbach P.E. - Rinker Design Associates (703).334-9300
SUBSURFACE UTILITY BY, DATE Matthew Ronsiem - Mid Atlantic Utility Locating (703).378-0100, August 2014

Office Locations
Main Office: 5542 Fairmont Avenue, Suite 100, Winchester, VA 22601, Phone: (540) 667-2085, Fax: (540) 662-0047
Northern Virginia: 4651 Daly Drive, Suite 100, Chantilly, VA 20151, Phone: (703) 378-0100, Fax: (703) 378-0117
Rinker Design Associates, P.C.
Civil Engineering - Surveying - Land Planning
Transportation - Environmental
Right of Way Services
SINCE ESTABLISHED IN MCLEAN, VA

COMMONWEALTH OF VIRGINIA
ADAM D. WELSCHENBACH
Lic. No. 044359
PROFESSIONAL ENGINEER

Adam Welschenbach 2020.02.14 10:05:29 -05'00'
Rinker Design Associates, P.C.
Manassas, Virginia
Traffic Engineer

REVISED	STATE	STATE ROUTE	STATE PROJECT	SHEET NO.
	VA.	11	U000-138-R04 P101, R201, C501	19(3)

DESIGN FEATURES RELATING TO CONSTRUCTION OR TO REGULATION AND CONTROL OF TRAFFIC MAY BE SUBJECT TO CHANGE AS DEEMED NECESSARY BY THE DEPARTMENT

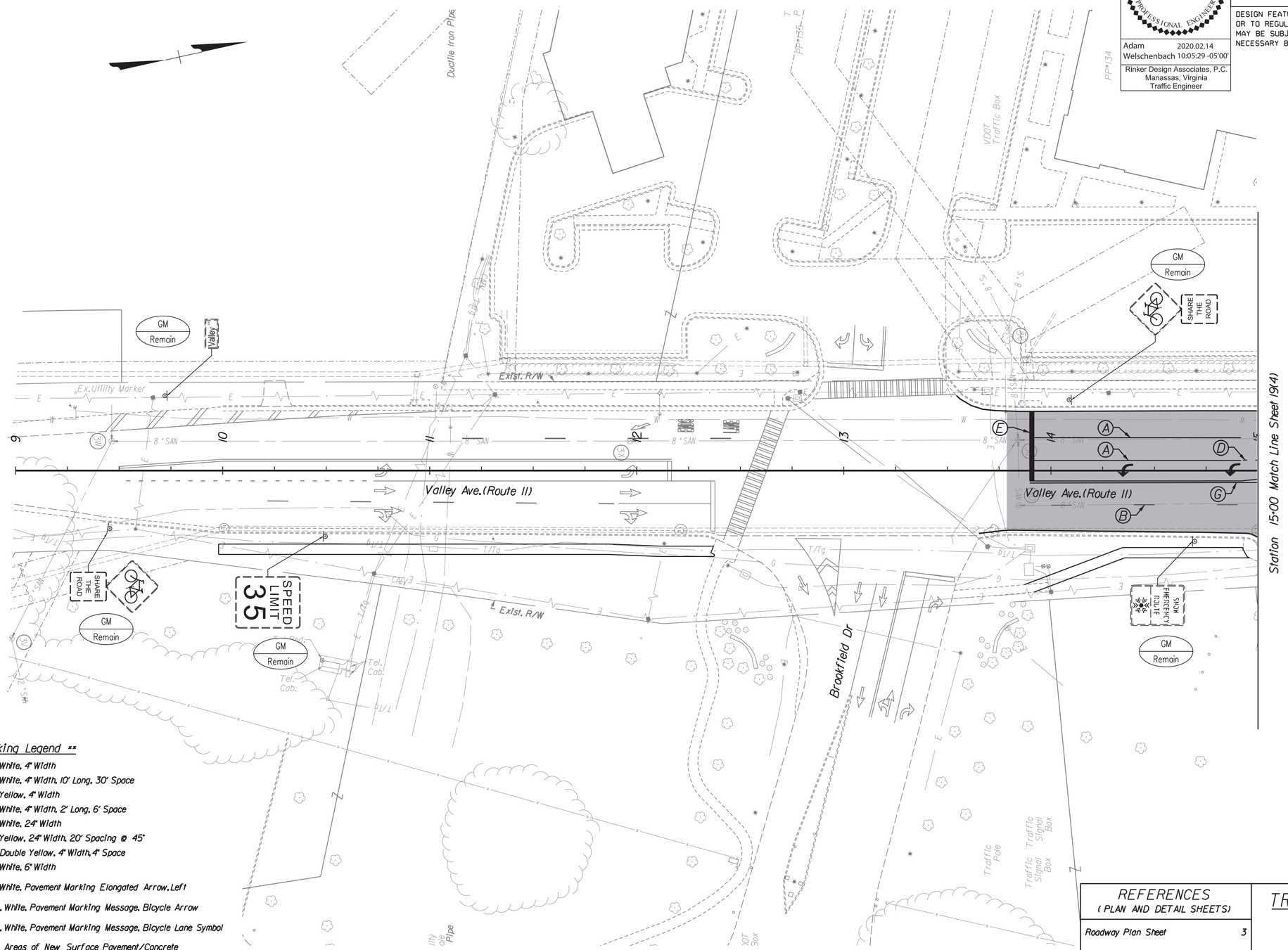

** Pavement Marking Legend **

- (A) Type B, Class I, White, 4" Width
- (B) Type B, Class I, White, 4" Width, 10' Long, 30' Space
- (C) Type B, Class I, Yellow, 4" Width
- (D) Type B, Class I, White, 4" Width, 2' Long, 6' Space
- (E) Type B, Class I, White, 24" Width
- (F) Type B, Class I, Yellow, 24" Width, 20' Spacing @ 45°
- (G) Type B, Class I, Double Yellow, 4" Width, 4" Space
- (H) Type B, Class I, White, 6" Width
- Type B, Class I, White, Pavement Marking Elongated Arrow, Left
- Type B, Class VI, White, Pavement Marking Message, Bicycle Arrow
- Type B, Class VI, White, Pavement Marking Message, Bicycle Lane Symbol
- Shading Denotes Areas of New Surface Pavement/Concrete

Notes: 1. Any existing condition that does not reflect the pavement marking plan as shown on this sheet shall be completely eradicated per VDOT Standards.

REFERENCES
(PLAN AND DETAIL SHEETS)

Roadway Plan Sheet 3

TRAFFIC CONTROL DEVICE PLANS

SIGNING AND PAVEMENT MARKING PLAN

CITY OF WINCHESTER

SCALE	PROJECT	SHEET NO.
0 25' 50'	U000-138-R04	19(3)

Rinker Design Associates, P.C.
Civil Engineering • Surveying • Environmental
Transportation • Land Development • Right of Way Services
Office Locations
Manassas, Va. 20110 Phone: (703) 330-9300 Fax: (703) 330-9301
Fairfax, Va. 22030 Phone: (703) 273-2300 Fax: (703) 273-2303
4411 Plaza Drive, Suite 100, Winchester, VA 22407 Phone: (540) 667-2085 Fax: (540) 667-2086
4411 Plaza Drive, Suite 100, Winchester, VA 22407 Phone: (540) 667-2085 Fax: (540) 665-0000

PROJECT MANAGER Perry Elsenach P.E. - City of Winchester (540).667-2085
SURVEYED BY, DATE Sidney Thomas L.S. - Rinker Design Associates (703).368-7373, October 2014
DESIGN BY Adam Welschenbach P.E. - Rinker Design Associates (703).334-9300
SUBSURFACE UTILITY BY, DATE Matthew Ronsem - Mid Atlantic Utility Locating (703).378-0100, August 2014

COMMONWEALTH OF VIRGINIA
ADAM D. WELSCHENBACH
Lic. No. 044359
PROFESSIONAL ENGINEER

Adam Welschenbach 2020.02.14 10:05:15 -05'00'
Rinker Design Associates, P.C.
Manassas, Virginia
Traffic Engineer

REVISED	STATE	ROUTE	PROJECT	SHEET NO.
	VA.	11	U000-138-R04 P101, R201, C501	19(4)

DESIGN FEATURES RELATING TO CONSTRUCTION OR TO REGULATION AND CONTROL OF TRAFFIC MAY BE SUBJECT TO CHANGE AS DEEMED NECESSARY BY THE DEPARTMENT

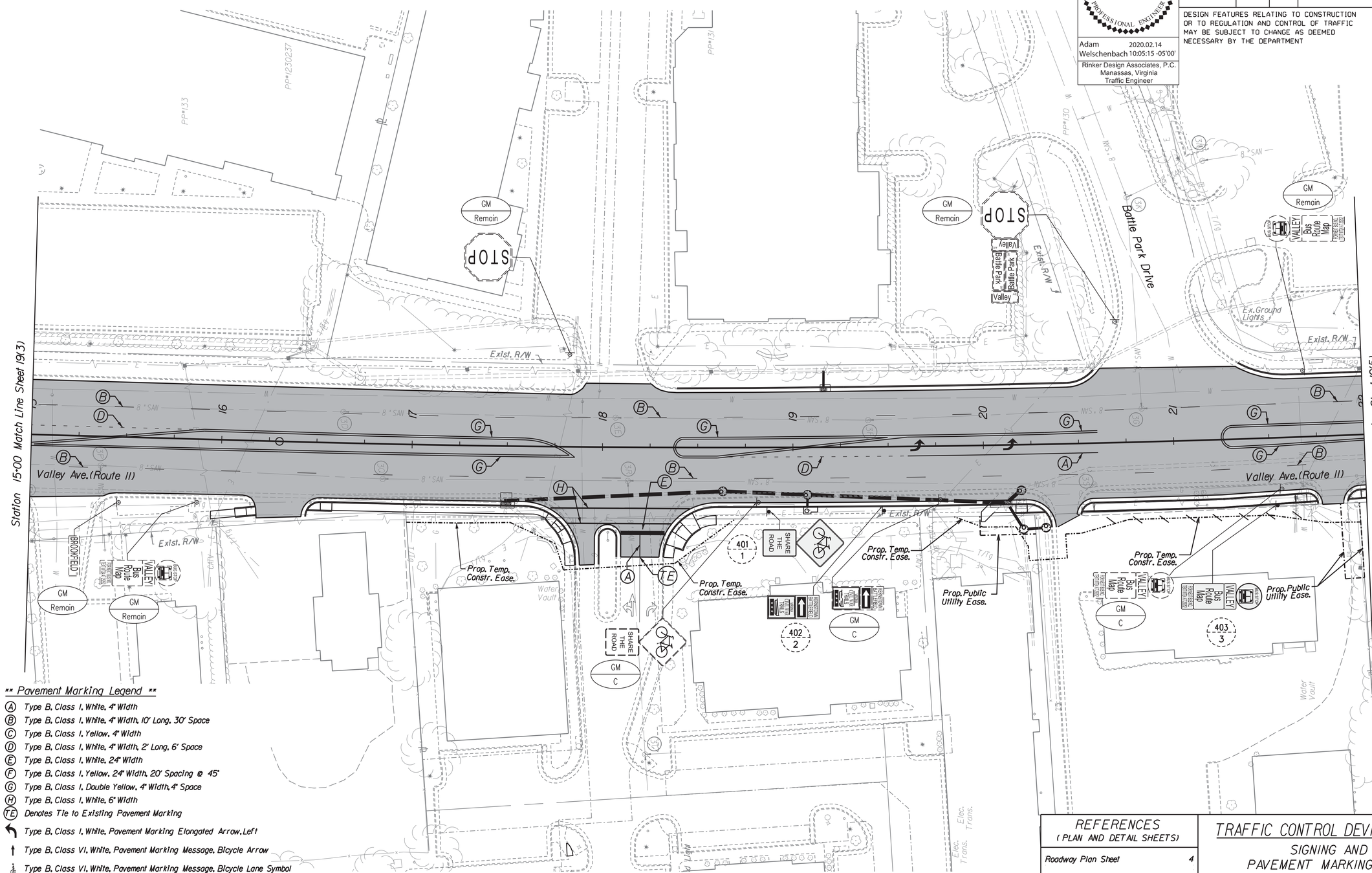

** Pavement Marking Legend **

- (A) Type B, Class I, White, 4" Width
- (B) Type B, Class I, White, 4" Width, 10' Long, 30' Space
- (C) Type B, Class I, Yellow, 4" Width
- (D) Type B, Class I, White, 4" Width, 2' Long, 6' Space
- (E) Type B, Class I, White, 24" Width
- (F) Type B, Class I, Yellow, 24" Width, 20' Spacing @ 45°
- (G) Type B, Class I, Double Yellow, 4" Width, 4" Space
- (H) Type B, Class I, White, 6" Width
- (TE) Denotes Tie to Existing Pavement Marking
- Type B, Class I, White, Pavement Marking Elongated Arrow, Left
- Type B, Class VI, White, Pavement Marking Message, Bicycle Arrow
- Type B, Class VI, White, Pavement Marking Message, Bicycle Lane Symbol
- Shading Denotes Areas of New Surface Pavement/Concrete

Notes: 1. Any existing condition that does not reflect the pavement marking plan as shown on this sheet shall be completely eradicated per VDOT Standards.

REFERENCES (PLAN AND DETAIL SHEETS)	
Roadway Plan Sheet	4

TRAFFIC CONTROL DEVICE PLANS

SIGNING AND PAVEMENT MARKING PLAN

CITY OF WINCHESTER

SCALE	PROJECT	SHEET NO.
0 25' 50'	U000-138-R04	19(4)

Rinker Design Associates, P.C.
Civil Engineering - Surveying - Environmental
Transportation - Right of Way Services
Office Locations
Main Office: 107 Alpha Drive, Suite 100, Winchester, VA 22601 Phone: (540) 667-2085 Fax: (540) 667-2086
Manassas Office: 10611 Dumfries Road, Suite 100, Manassas, VA 20110 Phone: (703) 368-7373 Fax: (703) 368-8387
Fairfax Office: 4411 Chain Bridge Road, Suite 100, Fairfax, VA 22030 Phone: (703) 334-9300 Fax: (703) 334-9301

PROJECT MANAGER Perry Elsenach P.E. - City of Winchester (540) 667-2085
SURVEYED BY, DATE Sidney Thomas L.S. - Rinker Design Associates (703) 368-7373, October 2014
DESIGN BY Adam Welschenbach P.E. - Rinker Design Associates (703) 334-9300
SUBSURFACE UTILITY BY, DATE Matthew Ronsiem - Mid Atlantic Utility Locating (703) 378-0100, August 2014

COMMONWEALTH OF VIRGINIA
ADAM D. WELSCHENBACH
Lic. No. 044359
PROFESSIONAL ENGINEER

Adam Welschenbach 2020.02.14 10:05:00 -05'00'
Rinker Design Associates, P.C.
Manassas, Virginia
Traffic Engineer

REVISED	STATE	ROUTE	PROJECT	SHEET NO.
	VA.	11	U000-138-R04 P101, R201, C501	19(5)

DESIGN FEATURES RELATING TO CONSTRUCTION OR TO REGULATION AND CONTROL OF TRAFFIC MAY BE SUBJECT TO CHANGE AS DEEMED NECESSARY BY THE DEPARTMENT

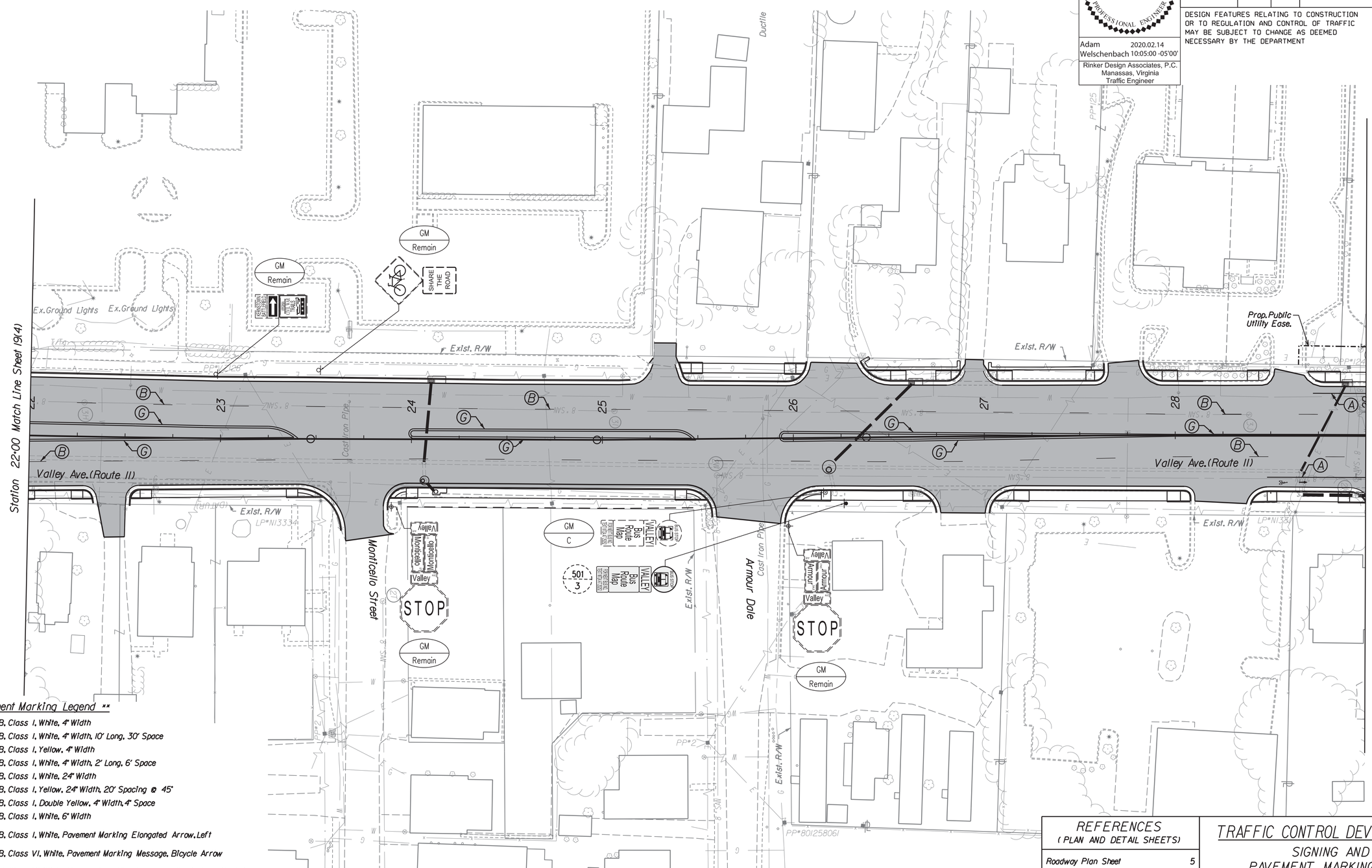

** Pavement Marking Legend **

- (A) Type B, Class I, White, 4" Width
- (B) Type B, Class I, White, 4" Width, 10' Long, 30' Space
- (C) Type B, Class I, Yellow, 4" Width
- (D) Type B, Class I, White, 4" Width, 2' Long, 6' Space
- (E) Type B, Class I, White, 24" Width
- (F) Type B, Class I, Yellow, 24" Width, 20' Spacing @ 45°
- (G) Type B, Class I, Double Yellow, 4" Width, 4" Space
- (H) Type B, Class I, White, 6" Width
- Type B, Class I, White, Pavement Marking Elongated Arrow, Left
- Type B, Class VI, White, Pavement Marking Message, Bicycle Arrow
- Type B, Class VI, White, Pavement Marking Message, Bicycle Lane Symbol
- Shading Denotes Areas of New Surface Pavement/Concrete

Notes: 1. Any existing condition that does not reflect the pavement marking plan as shown on this sheet shall be completely eradicated per VDOT Standards.

REFERENCES (PLAN AND DETAIL SHEETS)

Roadway Plan Sheet	5

TRAFFIC CONTROL DEVICE PLANS

SIGNING AND PAVEMENT MARKING PLAN

CITY OF WINCHESTER

SCALE	PROJECT	SHEET NO.
0 25' 50'	U000-138-R04	19(5)

Office Locations
Rinker Design Associates, P.C.
Civil Engineering - Surveying - Transportation
Environmental - Transportation - Right of Way Services
Corporate Headquarters: 4670 Duke Street, Suite 100, Alexandria, VA 22304, Phone: (540) 667-2085, Fax: (540) 667-2086
Northern Virginia: 4670 Duke Street, Suite 100, Alexandria, VA 22304, Phone: (703) 823-0300, Fax: (703) 823-0303
Shenandoah Valley: 1000 Technology Way, Suite 100, Harrisonburg, VA 22407, Phone: (540) 434-5000, Fax: (540) 434-6211

PROJECT MANAGER Perry Elsenach P.E. - City of Winchester (540) 667-2085
SURVEYED BY, DATE Sidney Thomas L.S. - Rinker Design Associates (703) 368-7373, October 2014
DESIGN BY Adam Welschenbach P.E. - Rinker Design Associates (703) 334-9300
SUBSURFACE UTILITY BY, DATE Matthew Ronsiem - Mid Atlantic Utility Locating (703) 378-0100, August 2014

COMMONWEALTH OF VIRGINIA
ADAM D. WELSCHENBACH
Lic. No. 044359
PROFESSIONAL ENGINEER

Adam Welschenbach 2020.02.14 10:04:37 -05'00'
Rinker Design Associates, P.C.
Manassas, Virginia
Traffic Engineer

REVISED	STATE	STATE ROUTE	STATE PROJECT	SHEET NO.
	VA.	11	U000-138-R04 P101, R201, C501	19(6)

DESIGN FEATURES RELATING TO CONSTRUCTION OR TO REGULATION AND CONTROL OF TRAFFIC MAY BE SUBJECT TO CHANGE AS DEEMED NECESSARY BY THE DEPARTMENT

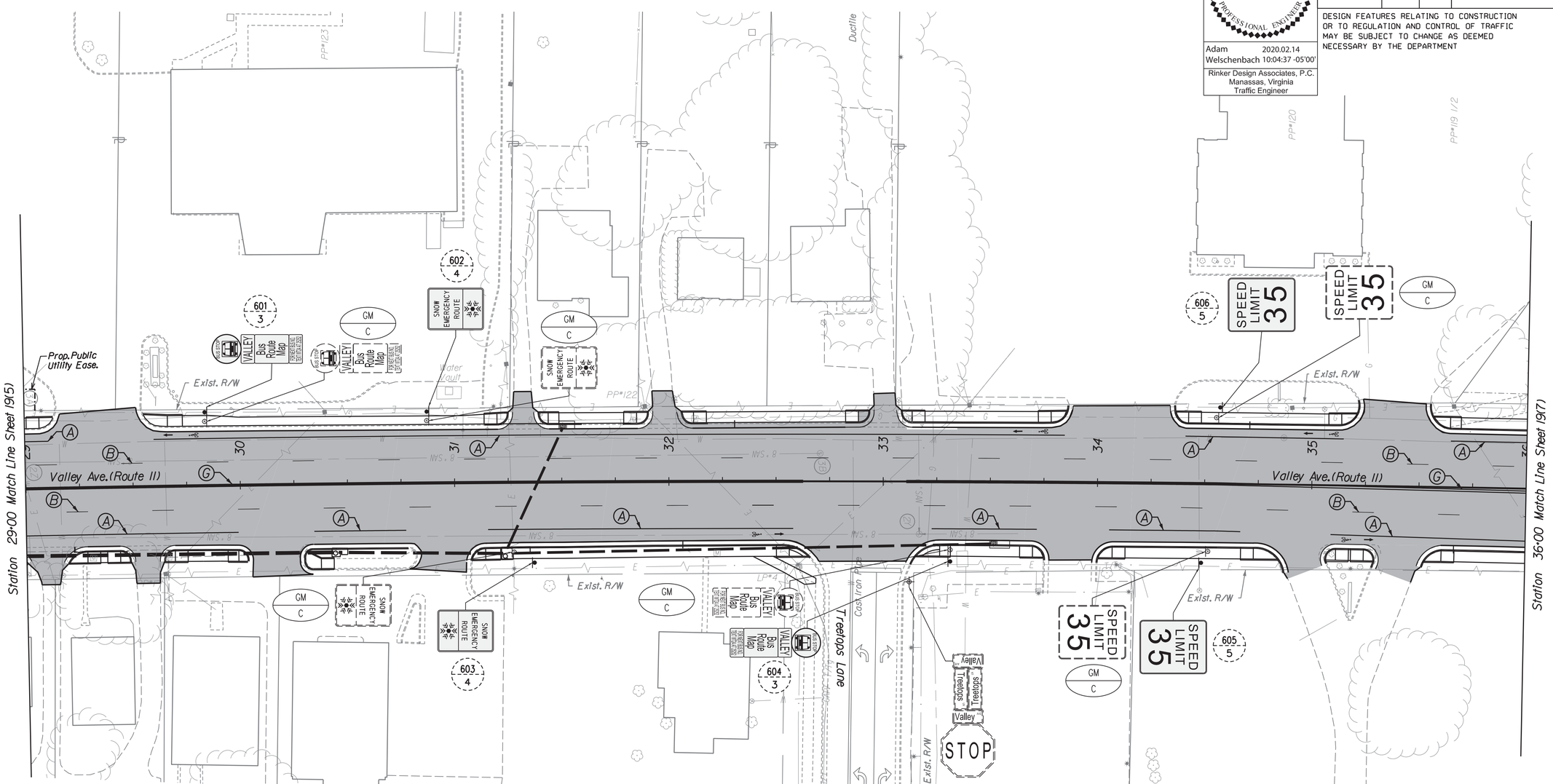

** Pavement Marking Legend **

- (A) Type B, Class I, White, 4" Width
- (B) Type B, Class I, White, 4" Width, 10' Long, 30' Space
- (C) Type B, Class I, Yellow, 4" Width
- (D) Type B, Class I, White, 4" Width, 2' Long, 6' Space
- (E) Type B, Class I, White, 24" Width
- (F) Type B, Class I, Yellow, 24" Width, 20' Spacing @ 45°
- (G) Type B, Class I, Double Yellow, 4" Width, 4" Space
- (H) Type B, Class I, White, 6" Width
- Type B, Class I, White, Pavement Marking Elongated Arrow, Left
- Type B, Class VI, White, Pavement Marking Message, Bicycle Arrow
- Type B, Class VI, White, Pavement Marking Message, Bicycle Lane Symbol
- Shading Denotes Areas of New Surface Pavement/Concrete

Notes: 1. Any existing condition that does not reflect the pavement marking plan as shown on this sheet shall be completely eradicated per VDOT Standards.

REFERENCES (PLAN AND DETAIL SHEETS)	
Roadway Plan Sheet	6

TRAFFIC CONTROL DEVICE PLANS

SIGNING AND PAVEMENT MARKING PLAN

CITY OF WINCHESTER

SCALE	PROJECT	SHEET NO.
0 25' 50'	U000-138-R04	19(6)

PROJECT MANAGER Perry Elsenach P.E. - City of Winchester (540) 667-2085
SURVEYED BY, DATE Sidney Thomas L.S. - Rinker Design Associates (703) 368-7373, October 2014
DESIGN BY Adam Welschenbach P.E. - Rinker Design Associates (703) 334-9300
SUBSURFACE UTILITY BY, DATE Matthew Ronsiem - Mid Atlantic Utility Locating (703) 378-0100, August 2014

Office Locations
Corporate Headquarters: 3601 Pender Drive, Suite 100, Fairfax, VA 22030, Phone: (703) 359-7373, Fax: (703) 359-0387
Northern Virginia: 3601 Pender Drive, Suite 100, Fairfax, VA 22030, Phone: (703) 359-7373, Fax: (703) 359-0387
Richmond: 4914 Fitzhugh Avenue, Suite 104, Richmond, VA 23230, Phone: (804) 353-8060, Fax: (804) 353-8061
Fredericksburg: 2121 Eskridge Road, Suite 106, Fredericksburg, VA 22401, Phone: (540) 373-8711, Fax: (540) 373-8712
Rinker Design Associates, P.C.
Civil Engineering • Surveying • Land Planning
Transportation • Environmental
Right-of-Way Services

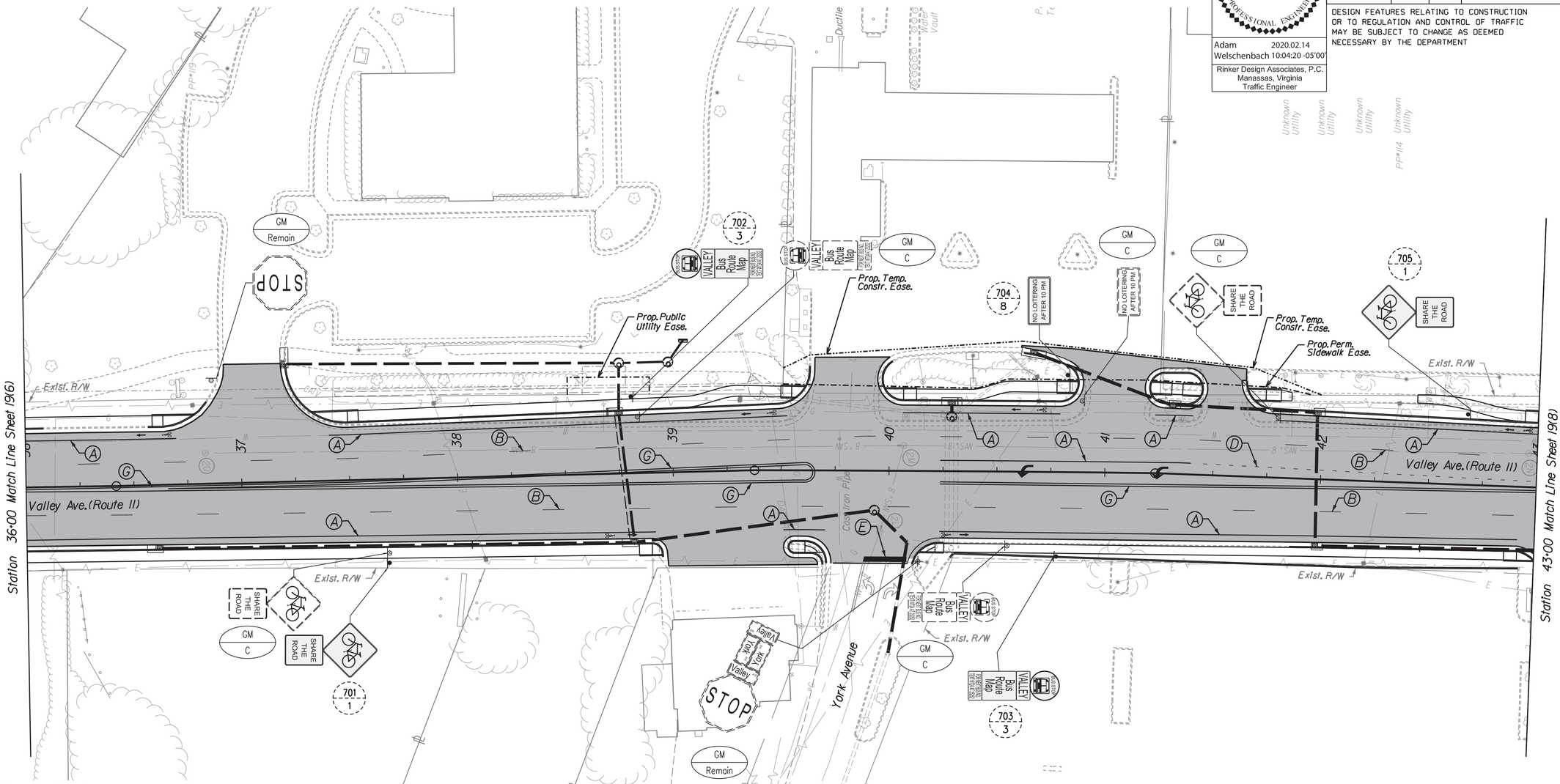

COMMONWEALTH OF VIRGINIA
ADAM D. WELSCHENBACH
Lic. No. 044359
PROFESSIONAL ENGINEER
Adam Welschenbach 2020.02.14 10:04:20 -05'00'
Rinker Design Associates, P.C.
Manassas, Virginia
Traffic Engineer

REVISED	STATE	STATE ROUTE	STATE PROJECT	SHEET NO.
	VA.	11	U000-138-R04 P101, R201, C501	19(7)

DESIGN FEATURES RELATING TO CONSTRUCTION OR TO REGULATION AND CONTROL OF TRAFFIC MAY BE SUBJECT TO CHANGE AS DEEMED NECESSARY BY THE DEPARTMENT

** Pavement Marking Legend **

- (A) Type B, Class I, White, 4" Width
- (B) Type B, Class I, White, 4" Width, 10' Long, 30' Space
- (C) Type B, Class I, Yellow, 4" Width
- (D) Type B, Class I, White, 4" Width, 2' Long, 6' Space
- (E) Type B, Class I, White, 24" Width
- (F) Type B, Class I, Yellow, 24" Width, 20' Spacing @ 45°
- (G) Type B, Class I, Double Yellow, 4" Width, 4" Space
- (H) Type B, Class I, White, 6" Width
- Type B, Class I, White, Pavement Marking Elongated Arrow, Left
- Type B, Class VI, White, Pavement Marking Message, Bicycle Arrow
- Type B, Class VI, White, Pavement Marking Message, Bicycle Lane Symbol
- Shading Denotes Areas of New Surface Pavement/Concrete

Notes: 1. Any existing condition that does not reflect the pavement marking plan as shown on this sheet shall be completely eradicated per VDOT Standards.

REFERENCES (PLAN AND DETAIL SHEETS)	
Roadway Plan Sheet	7

TRAFFIC CONTROL DEVICE PLANS

SIGNING AND PAVEMENT MARKING PLAN

CITY OF WINCHESTER

SCALE	PROJECT	SHEET NO.
0 25' 50'	U000-138-R04	19(7)

PROJECT MANAGER Perry Elsenach P.E. - City of Winchester (540).667-2085
SURVEYED BY, DATE Sidney Thomas L.S. - Rinker Design Associates (703).368-7373, October 2014
DESIGN BY Adam Welschenbach P.E. - Rinker Design Associates (703).334-9300
SUBSURFACE UTILITY BY, DATE Matthew Ronsem - Mid Atlantic Utility Locating (703).378-0100, August 2014

Rinker Design Associates, P.C.
Civil Engineering - Surveying - Transportation Planning
Transportation Engineering - Environmental
Right of Way Services
Office Locations
Manassas, Virginia 20110 - 8609 Sudley Road, Suite 100
Sterling, Virginia 20164 - 46790 Dulles Crossing, Suite 100
Winchester, Virginia 22601 - 107 Kent Street
Fredericksburg, Virginia 22401 - 2300 Fall Hill Avenue, Suite 100
Fax: (540) 667-2085
Fax: (703) 334-9301
Fax: (540) 373-3183
Fax: (540) 373-0149

REVISED	STATE	ROUTE	PROJECT	SHEET NO.
	VA.	11	U000-138-R04 P101, R201, C501	19(8)

COMMONWEALTH OF VIRGINIA
ADAM D. WELSCHENBACH
Lic. No. 044359
PROFESSIONAL ENGINEER

Adam Welschenbach 2020.02.14 10:04:04 -05'00'
Rinker Design Associates, P.C.
Manassas, Virginia
Traffic Engineer

DESIGN FEATURES RELATING TO CONSTRUCTION OR TO REGULATION AND CONTROL OF TRAFFIC MAY BE SUBJECT TO CHANGE AS DEEMED NECESSARY BY THE DEPARTMENT

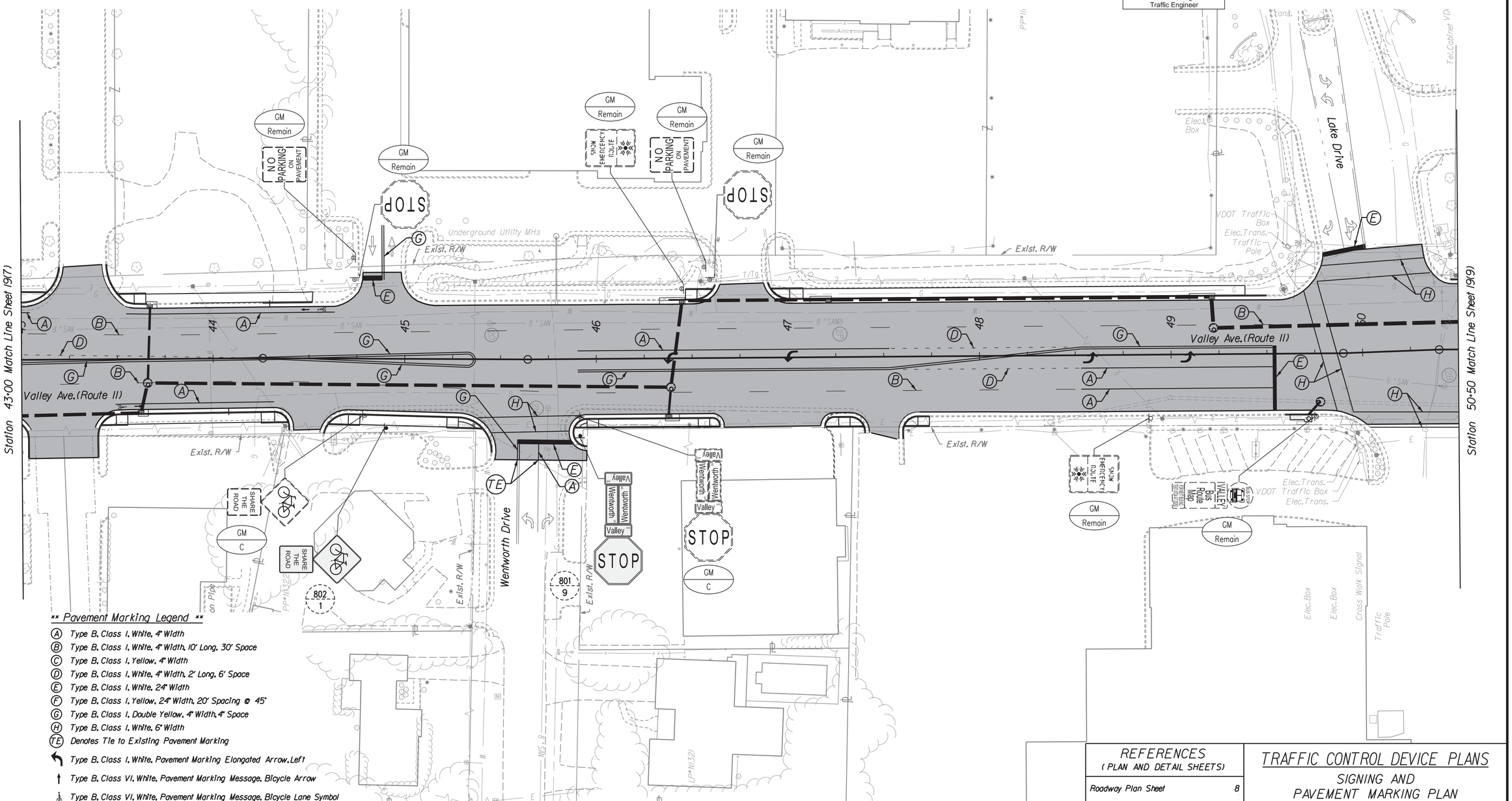

** Pavement Marking Legend **

- (A) Type B, Class I, White, 4" Width
- (B) Type B, Class I, White, 4" Width, 10' Long, 30' Space
- (C) Type B, Class I, Yellow, 4" Width
- (D) Type B, Class I, White, 4" Width, 2' Long, 6' Space
- (E) Type B, Class I, White, 24" Width
- (F) Type B, Class I, Yellow, 24" Width, 20' Spacing @ 45°
- (G) Type B, Class I, Double Yellow, 4" Width, 4" Space
- (H) Type B, Class I, White, 6" Width
- (TE) Denotes Tie to Existing Pavement Marking
- Type B, Class I, White, Pavement Marking Elongated Arrow, Left
- Type B, Class VI, White, Pavement Marking Message, Bicycle Arrow
- Type B, Class VI, White, Pavement Marking Message, Bicycle Lane Symbol
- Shading Denotes Areas of New Surface Pavement/Concrete

Notes: 1. Any existing condition that does not reflect the pavement marking plan as shown on this sheet shall be completely eradicated per VDOT Standards.

REFERENCES (PLAN AND DETAIL SHEETS)	
Roadway Plan Sheet	8

TRAFFIC CONTROL DEVICE PLANS

SIGNING AND PAVEMENT MARKING PLAN

CITY OF WINCHESTER

SCALE	PROJECT	SHEET NO.
0 25' 50'	U000-138-R04	19(8)

PROJECT MANAGER Perry Elsenach P.E. - City of Winchester (540) 667-2085
SURVEYED BY, DATE Sidney Thomas L.S. - Rinker Design Associates (703) 368-7373, October 2014
DESIGN BY Adam Welschenbach P.E. - Rinker Design Associates (703) 334-9300
SUBSURFACE UTILITY BY, DATE Matthew Ronsiem - Mid Atlantic Utility Locating (703) 378-0100, August 2014

Office Locations
Corporate Headquarters: 3101 Rt. 7 Business Center, Suite 100, Sterling, VA 20164, Phone: (703) 450-2300, Fax: (703) 450-2303
Manassas, VA 20110, Phone: (703) 334-9300, Fax: (703) 334-9301
Fredericksburg, VA 22407, Phone: (540) 373-8300, Fax: (540) 373-8310
Rinker Design Associates, P.C.
Civil Engineering • Surveying • Transportation Planning
Environmental • Transportation • Right of Way Services

REVISED	STATE	ROUTE	PROJECT	SHEET NO.
	VA.	11	U000-138-R04 P101, R201, C501	19(9)

COMMONWEALTH OF VIRGINIA
ADAM D. WELSCHENBACH
Lic. No. 044359
PROFESSIONAL ENGINEER

Adam Welschenbach 2020.02.14 10:03:48 -05'00'
Rinker Design Associates, P.C.
Manassas, Virginia
Traffic Engineer

DESIGN FEATURES RELATING TO CONSTRUCTION OR TO REGULATION AND CONTROL OF TRAFFIC MAY BE SUBJECT TO CHANGE AS DEEMED NECESSARY BY THE DEPARTMENT

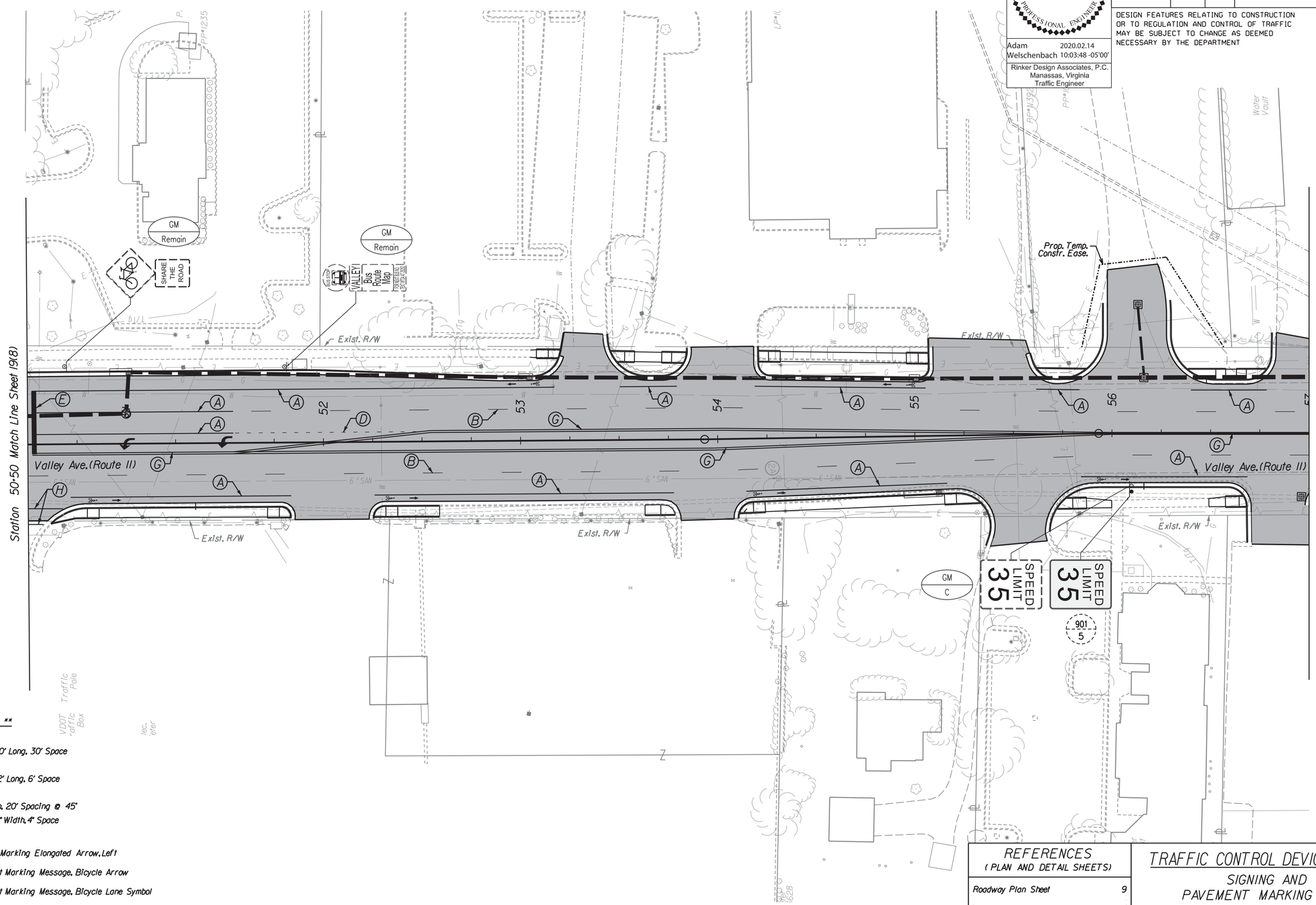

** Pavement Marking Legend **

- (A) Type B, Class I, White, 4" Width
- (B) Type B, Class I, White, 4" Width, 10' Long, 30' Space
- (C) Type B, Class I, Yellow, 4" Width
- (D) Type B, Class I, White, 4" Width, 2' Long, 6' Space
- (E) Type B, Class I, White, 24" Width
- (F) Type B, Class I, Yellow, 24" Width, 20' Spacing @ 45°
- (G) Type B, Class I, Double Yellow, 4" Width, 4" Space
- (H) Type B, Class I, White, 6" Width
- Type B, Class I, White, Pavement Marking Elongated Arrow, Left
- Type B, Class VI, White, Pavement Marking Message, Bicycle Arrow
- Type B, Class VI, White, Pavement Marking Message, Bicycle Lane Symbol
- Shading Denotes Areas of New Surface Pavement/Concrete

Notes: 1. Any existing condition that does not reflect the pavement marking plan as shown on this sheet shall be completely eradicated per VDOT Standards.

REFERENCES (PLAN AND DETAIL SHEETS)	
Roadway Plan Sheet	9

TRAFFIC CONTROL DEVICE PLANS

SIGNING AND PAVEMENT MARKING PLAN

CITY OF WINCHESTER

SCALE	PROJECT	SHEET NO.
0 25' 50'	U000-138-R04	19(9)

PROJECT MANAGER Perry Elsenach P.E. - City of Winchester (540).667-2085
SURVEYED BY, DATE Sidney Thomas L.S. - Rinker Design Associates (703).368-7373, October 2014
DESIGN BY Adam Welschenbach P.E. - Rinker Design Associates (703).334-9300
SUBSURFACE UTILITY BY, DATE Matthew Ronsiem - Mid Atlantic Utility Locating (703).378-0100, August 2014

Rinker Design Associates, P.C.
Civil Engineering - Surveying - Environmental
Transportation - Land Development - Right of Way Services
Office Locations
Manassas, VA 20110 Phone: (703) 334-9300 Fax: (703) 335-0369
Leesburg, VA 20175 Phone: (703) 771-0300 Fax: (703) 771-0304
Front Royal, VA 22630 Phone: (540) 635-2000 Fax: (540) 635-2000
Winchester, VA 22601 Phone: (540) 667-2085 Fax: (540) 667-0500
Fredericksburg, VA 22407 Phone: (540) 373-7020 Fax: (540) 373-7030
SERVING VIRGINIA & N.C.

REVISED	STATE	ROUTE	PROJECT	SHEET NO.
	VA.	11	U000-138-R04 P101, R201, C501	19(10)

COMMONWEALTH OF VIRGINIA
ADAM D. WELSCHENBACH
Lic. No. 044359
PROFESSIONAL ENGINEER

Adam Welschenbach 2020.02.14 10:03:34 -05'00'
Rinker Design Associates, P.C.
Manassas, Virginia
Traffic Engineer

DESIGN FEATURES RELATING TO CONSTRUCTION OR TO REGULATION AND CONTROL OF TRAFFIC MAY BE SUBJECT TO CHANGE AS DEEMED NECESSARY BY THE DEPARTMENT

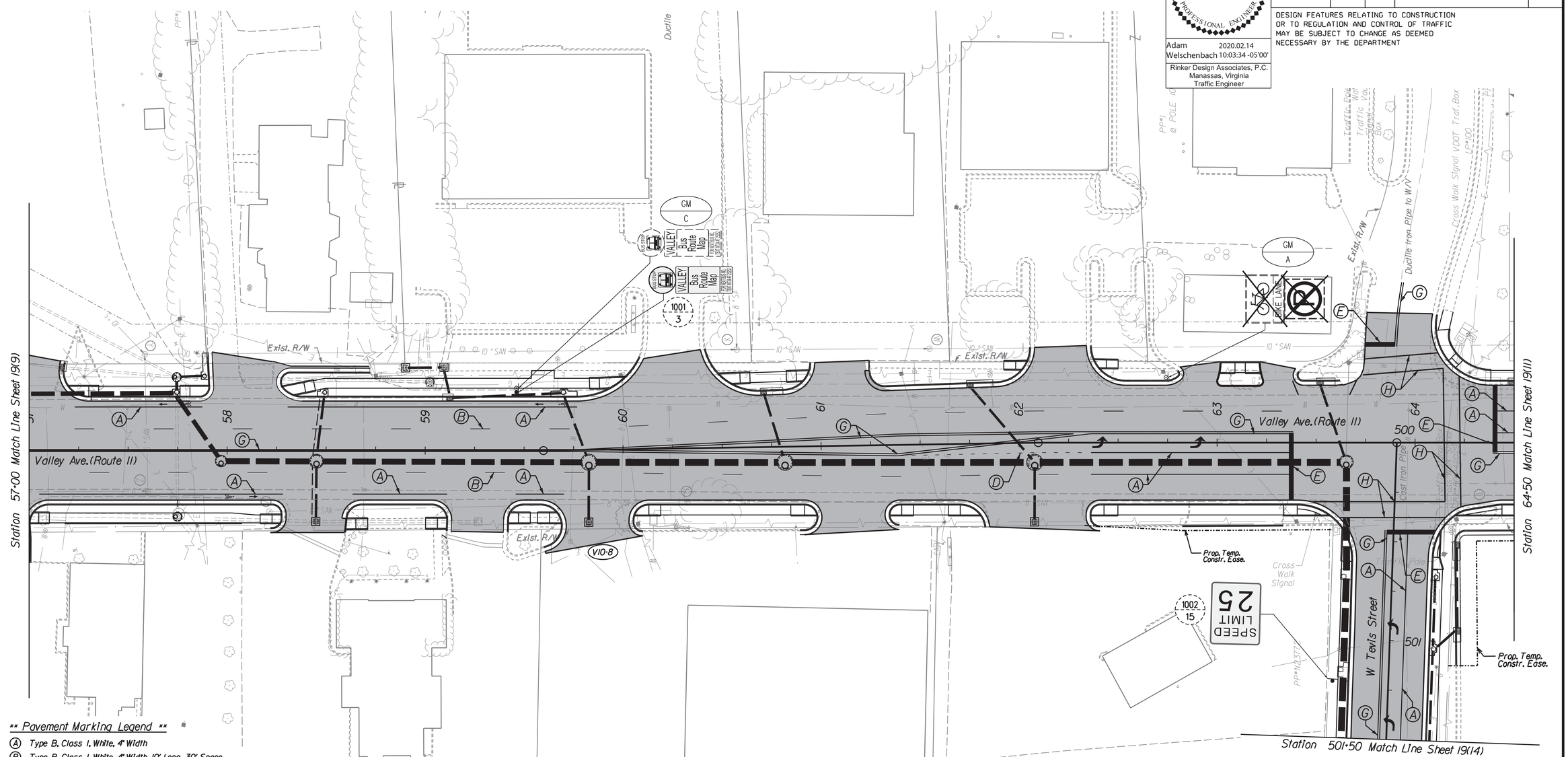

** Pavement Marking Legend **

- (A) Type B, Class I, White, 4" Width
- (B) Type B, Class I, White, 4" Width, 10' Long, 30' Space
- (C) Type B, Class I, Yellow, 4" Width
- (D) Type B, Class I, White, 4" Width, 2' Long, 6' Space
- (E) Type B, Class I, White, 24" Width
- (F) Type B, Class I, Yellow, 24" Width, 20' Spacing @ 45°
- (G) Type B, Class I, Double Yellow, 4" Width, 4" Space
- (H) Type B, Class I, White, 6" Width
- Type B, Class I, White, Pavement Marking Elongated Arrow, Left
- Type B, Class VI, White, Pavement Marking Message, Bicycle Arrow
- Type B, Class VI, White, Pavement Marking Message, Bicycle Lane Symbol
- Shading Denotes Areas of New Surface Pavement/Concrete

Notes: 1. Any existing condition that does not reflect the pavement marking plan as shown on this sheet shall be completely eradicated per VDOT Standards.

REFERENCES (PLAN AND DETAIL SHEETS)	
Roadway Plan Sheet	10

TRAFFIC CONTROL DEVICE PLANS

SIGNING AND PAVEMENT MARKING PLAN

CITY OF WINCHESTER

SCALE	PROJECT	SHEET NO.
0 25' 50'	U000-138-R04	19(10)

Rinker Design Associates, P.C.
Civil Engineering • Surveying • Land Planning
Transportation • Environmental
Right of Way Services
Office Locations
Corporate Headquarters: 8607 Westwood Center Drive, Suite 310, Vienna, VA 22182, Phone: (703) 573-7300, Fax: (703) 573-5544
Manassas: 10820 Rixlew Lane, Suite 100, Manassas, VA 20109, Phone: (703) 368-7373, Fax: (703) 368-7374
Fredericksburg: 2607 Plank Road, Suite 100, Fredericksburg, VA 22401, Phone: (540) 373-8300, Fax: (540) 373-8301

PROJECT MANAGER Perry Elsenach P.E. - City of Winchester (540).667-2085
SURVEYED BY, DATE Sidney Thomas L.S. - Rinker Design Associates (703).368-7373, October 2014
DESIGN BY Adam Welschenbach P.E. - Rinker Design Associates (703).334-9300
SUBSURFACE UTILITY BY, DATE Matthew Ronsiem - Mid Atlantic Utility Locating (703).378-0100, August 2014

ADAM D. WELSCHENBACH
Lic. No. 044359
COMMONWEALTH OF VIRGINIA
PROFESSIONAL ENGINEER
Adam Welschenbach 2020.02.14 10:03:11 -05'00'
Rinker Design Associates, P.C.
Manassas, Virginia
Traffic Engineer

REVISED	STATE	ROUTE	PROJECT	SHEET NO.
	VA.	11	U000-138-R04 P101, R201, C501	19(11)

DESIGN FEATURES RELATING TO CONSTRUCTION OR TO REGULATION AND CONTROL OF TRAFFIC MAY BE SUBJECT TO CHANGE AS DEEMED NECESSARY BY THE DEPARTMENT

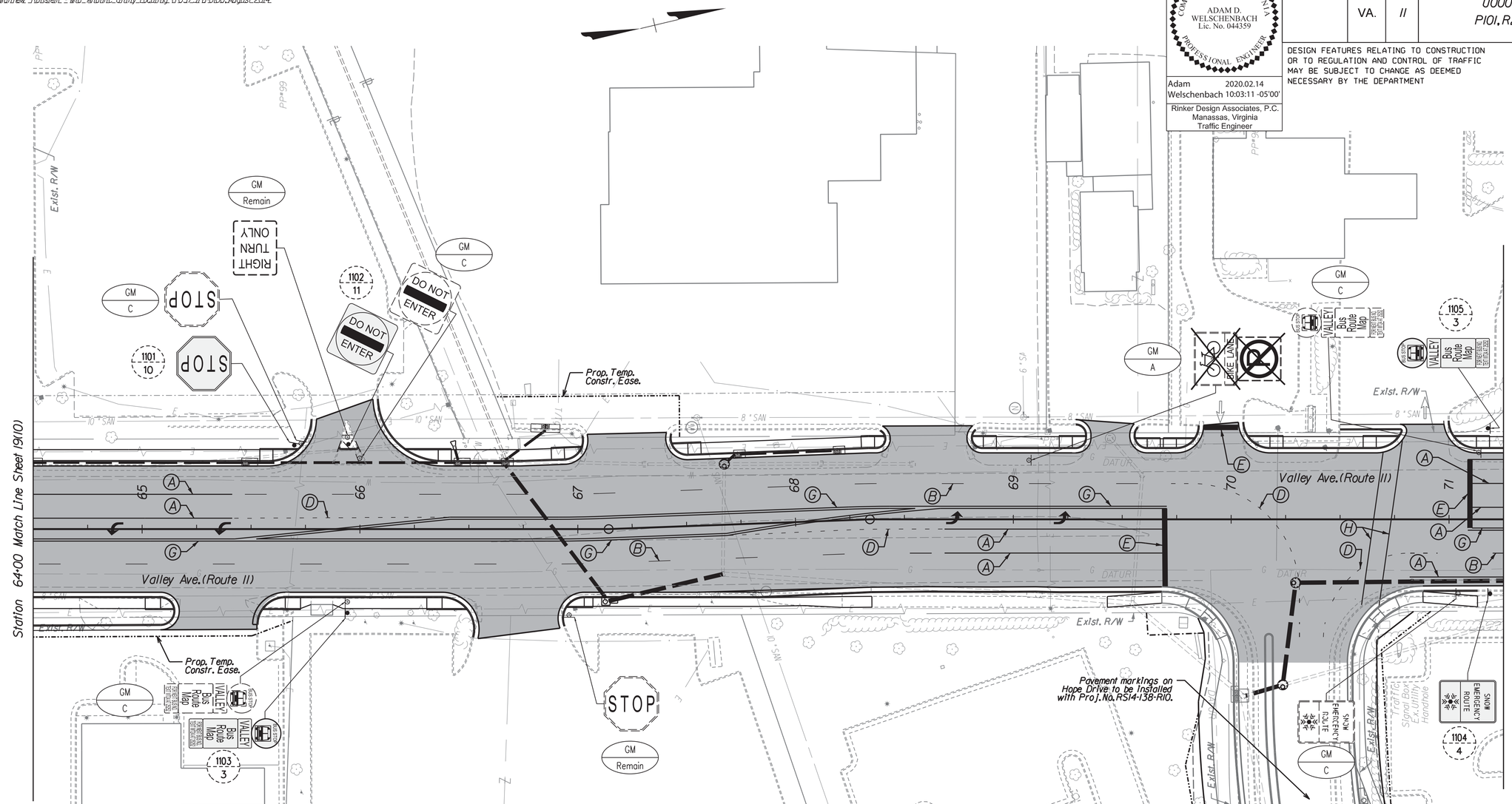

** Pavement Marking Legend **

- (A) Type B, Class I, White, 4" Width
- (B) Type B, Class I, White, 4" Width, 10' Long, 30' Space
- (C) Type B, Class I, Yellow, 4" Width
- (D) Type B, Class I, White, 4" Width, 2' Long, 6' Space
- (E) Type B, Class I, White, 24" Width
- (F) Type B, Class I, Yellow, 24" Width, 20' Spacing @ 45°
- (G) Type B, Class I, Double Yellow, 4" Width, 4" Space
- (H) Type B, Class I, White, 6" Width
- Type B, Class I, White, Pavement Marking Elongated Arrow, Left
- Type B, Class VI, White, Pavement Marking Message, Bicycle Arrow
- Type B, Class VI, White, Pavement Marking Message, Bicycle Lane Symbol
- Shading Denotes Areas of New Surface Pavement/Concrete

Notes: 1. Any existing condition that does not reflect the pavement marking plan as shown on this sheet shall be completely eradicated per VDOT Standards.

REFERENCES
(PLAN AND DETAIL SHEETS)

Roadway Plan Sheet	11

TRAFFIC CONTROL DEVICE PLANS

SIGNING AND PAVEMENT MARKING PLAN

CITY OF WINCHESTER

SCALE	PROJECT	SHEET NO.
0 25' 50'	U000-138-R04	19(11)

PROJECT MANAGER Perry Elsenach P.E. - City of Winchester (540) 667-2085
SURVEYED BY, DATE Sidney Thomas L.S. - Rinker Design Associates (703) 368-7373, October 2014
DESIGN BY Adam Welschenbach P.E. - Rinker Design Associates (703) 334-9300
SUBSURFACE UTILITY BY, DATE Matthew Ronsiem - Mid Atlantic Utility Locating (703) 378-0100, August 2014

Office Locations
Corporate Headquarters: 4101 Fairfax Drive, Suite 100, Arlington, VA 22203, Phone: (703) 334-9300, Fax: (703) 243-2243
Northern Virginia: 4101 Fairfax Drive, Suite 100, Arlington, VA 22203, Phone: (703) 334-9300, Fax: (703) 243-2243
Richmond: 2001 Bayberry Road, Suite 100, Richmond, VA 23230, Phone: (804) 282-0800, Fax: (804) 282-0800
Rinker Design Associates, P.C.
Civil Engineering • Surveying • Environmental
Transportation • Right-of-Way Services

ADAM D. WELSCHENBACH
Lic. No. 044359
COMMONWEALTH OF VIRGINIA
PROFESSIONAL ENGINEER

Adam Welschenbach 2020.02.14 10:02:56 -05'00'
Rinker Design Associates, P.C.
Manassas, Virginia
Traffic Engineer

REVISED	STATE	ROUTE	PROJECT	SHEET NO.
	VA.	11	U000-138-R04 P101, R201, C501	19(12)

DESIGN FEATURES RELATING TO CONSTRUCTION OR TO REGULATION AND CONTROL OF TRAFFIC MAY BE SUBJECT TO CHANGE AS DEEMED NECESSARY BY THE DEPARTMENT

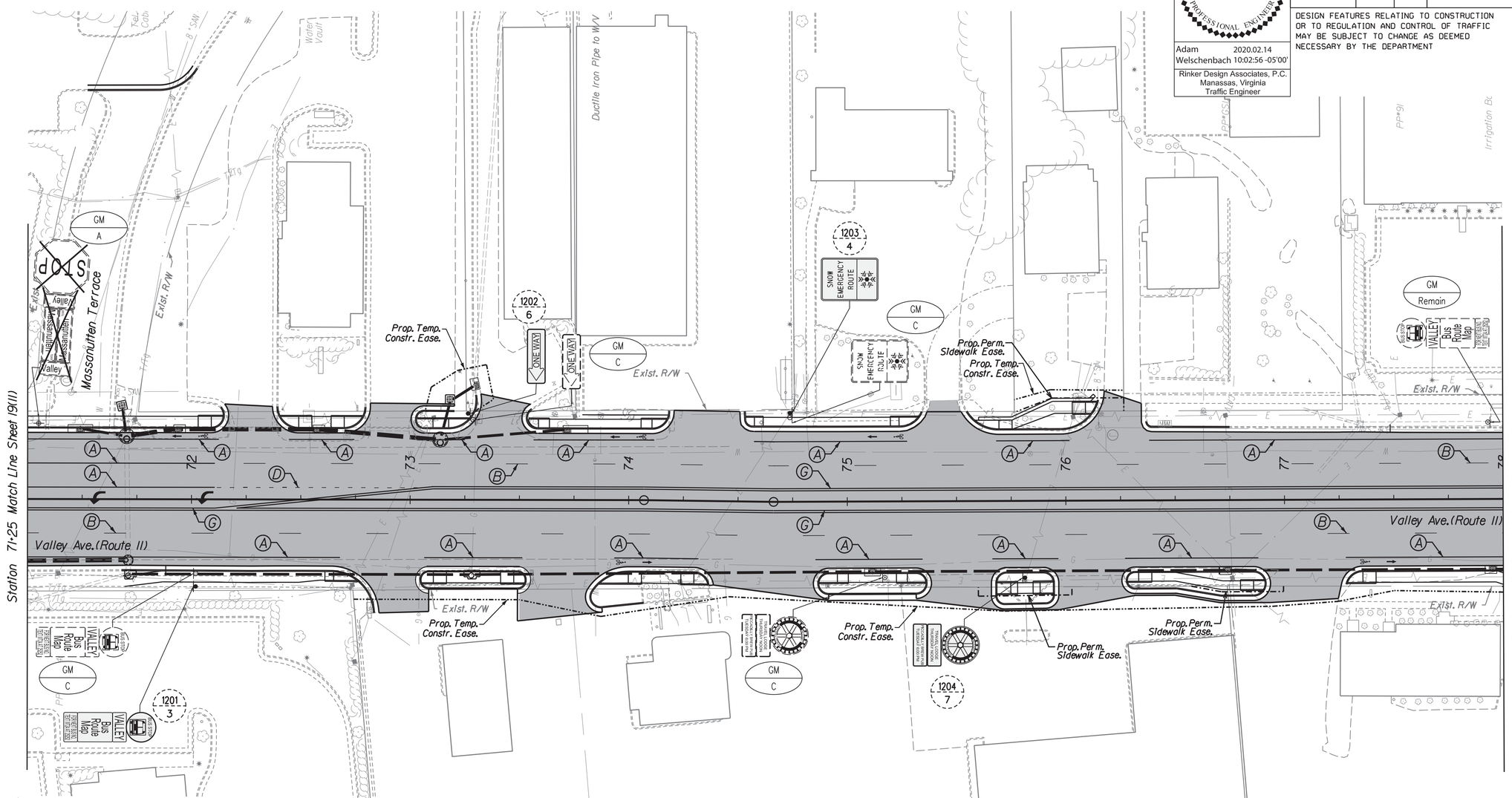

** Pavement Marking Legend **

- (A) Type B, Class I, White, 4" Width
- (B) Type B, Class I, White, 4" Width, 10' Long, 30' Space
- (C) Type B, Class I, Yellow, 4" Width
- (D) Type B, Class I, White, 4" Width, 2' Long, 6' Space
- (E) Type B, Class I, White, 24" Width
- (F) Type B, Class I, Yellow, 24" Width, 20' Spacing @ 45°
- (G) Type B, Class I, Double Yellow, 4" Width, 4" Space
- (H) Type B, Class I, White, 6" Width
- Type B, Class I, White, Pavement Marking Elongated Arrow, Left
- Type B, Class VI, White, Pavement Marking Message, Bicycle Arrow
- Type B, Class VI, White, Pavement Marking Message, Bicycle Lane Symbol
- Shading Denotes Areas of New Surface Pavement/Concrete

Notes: 1. Any existing condition that does not reflect the pavement marking plan as shown on this sheet shall be completely eradicated per VDOT Standards.

REFERENCES (PLAN AND DETAIL SHEETS)	
Roadway Plan Sheet	12

TRAFFIC CONTROL DEVICE PLANS

SIGNING AND PAVEMENT MARKING PLAN

CITY OF WINCHESTER

SCALE	PROJECT	SHEET NO.
0 25' 50'	U000-138-R04	19(12)

Rinker Design Associates, P.C.
Civil Engineering • Surveying • Environmental
Transportation • Land Development • Right of Way Services
Office Locations
Manassas, VA 20110 Phone: (703) 330-9300 Fax: (703) 330-9301
Leesburg, VA 20175 Phone: (703) 771-9300 Fax: (703) 771-9301
Front Royal, VA 22630 Phone: (540) 635-9300 Fax: (540) 635-9301
4411 Plaza Square Boulevard Suite 100 Lynchburg, VA 24502 Phone: (434) 239-9300 Fax: (434) 239-9301
4411 Plaza Square Boulevard Suite 100 Lynchburg, VA 24502 Phone: (434) 239-9300 Fax: (434) 239-9301
PROJECT MANAGER Perry Elsenach P.E. - City of Winchester (540).667-2085
SURVEYED BY, DATE Sidney Thomas L.S. - Rinker Design Associates (703).368-7373, October 2014
DESIGN BY Adam Welschenbach P.E. - Rinker Design Associates (703).334-9300
SUBSURFACE UTILITY BY, DATE Matthew Ronsiem - Mid Atlantic Utility Locating (703).378-0100, August 2014

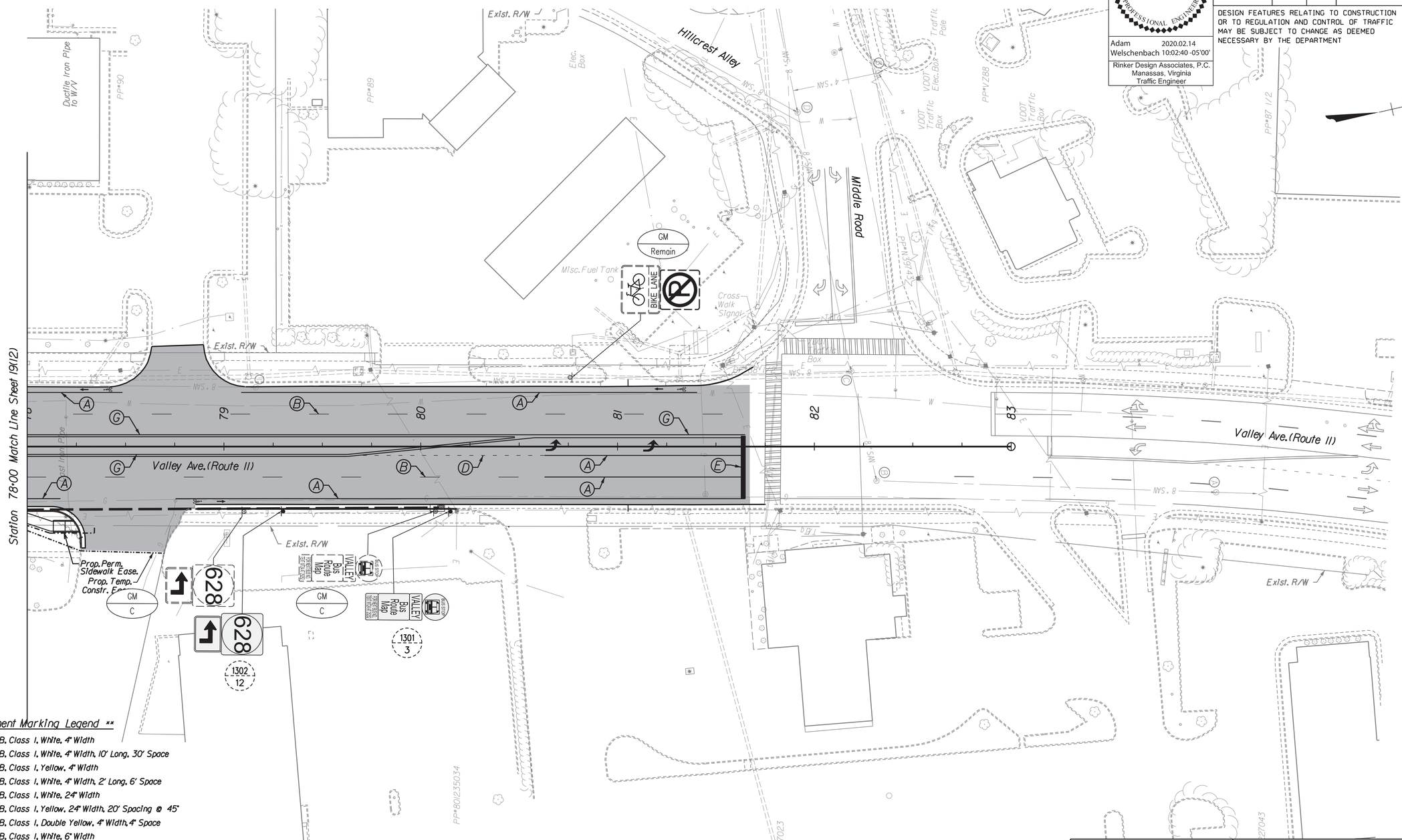

** Pavement Marking Legend **

- (A) Type B, Class I, White, 4" Width
- (B) Type B, Class I, White, 4" Width, 10' Long, 30' Space
- (C) Type B, Class I, Yellow, 4" Width
- (D) Type B, Class I, White, 4" Width, 2' Long, 6' Space
- (E) Type B, Class I, White, 24" Width
- (F) Type B, Class I, Yellow, 24" Width, 20' Spacing @ 45°
- (G) Type B, Class I, Double Yellow, 4" Width, 4" Space
- (H) Type B, Class I, White, 6" Width
- Type B, Class I, White, Pavement Marking Elongated Arrow, Left
- Type B, Class VI, White, Pavement Marking Message, Bicycle Arrow
- Type B, Class VI, White, Pavement Marking Message, Bicycle Lane Symbol
- Shading Denotes Areas of New Surface Pavement/Concrete

Notes: 1. Any existing condition that does not reflect the pavement marking plan as shown on this sheet shall be completely eradicated per VDOT Standards.

COMMONWEALTH OF VIRGINIA
ADAM D. WELSCHENBACH
Lic. No. 044359
PROFESSIONAL ENGINEER

Adam Welschenbach 2020.02.14 10:02:40 -05'00'
Rinker Design Associates, P.C.
Manassas, Virginia
Traffic Engineer

REVISED	STATE	STATE ROUTE	STATE PROJECT	SHEET NO.
	VA.	11	U000-138-R04 P101, R201, C501	19(13)

DESIGN FEATURES RELATING TO CONSTRUCTION OR TO REGULATION AND CONTROL OF TRAFFIC MAY BE SUBJECT TO CHANGE AS DEEMED NECESSARY BY THE DEPARTMENT

REFERENCES (PLAN AND DETAIL SHEETS)	
Roadway Plan Sheet	13

TRAFFIC CONTROL DEVICE PLANS

SIGNING PLAN AND PAVEMENT MARKING PLAN

CITY OF WINCHESTER

SCALE	PROJECT	SHEET NO.
0 25' 50'	U000-138-R04	19(13)

Rinker Design Associates, P.C.
Civil Engineering - Surveying - Land Planning
Transportation - Environmental
Right of Way Services
Office Locations
Manassas, Virginia 20110 — 8609 Sudley Road, Suite 100, Phone: (703) 368-7373, Fax: (703) 368-7374
Leesburg, Virginia 20175 — 207 Plaza Drive, Suite 100, Phone: (703) 777-1100, Fax: (703) 777-1101
Front Royal, Virginia 22630 — 1401 Stonewall Jackson Blvd., Suite 100, Phone: (540) 635-8000, Fax: (540) 635-8001

PROJECT MANAGER Perry Elsenach P.E. - City of Winchester (540) 667-2085
SURVEYED BY, DATE Sidney Thomas L.S. - Rinker Design Associates (703) 368-7373, October 2014
DESIGN BY Adam Welschenbach P.E. - Rinker Design Associates (703) 334-9300
SUBSURFACE UTILITY BY, DATE Matthew Ransleim - Mid Atlantic Utility Locating (703) 378-0100, August 2014

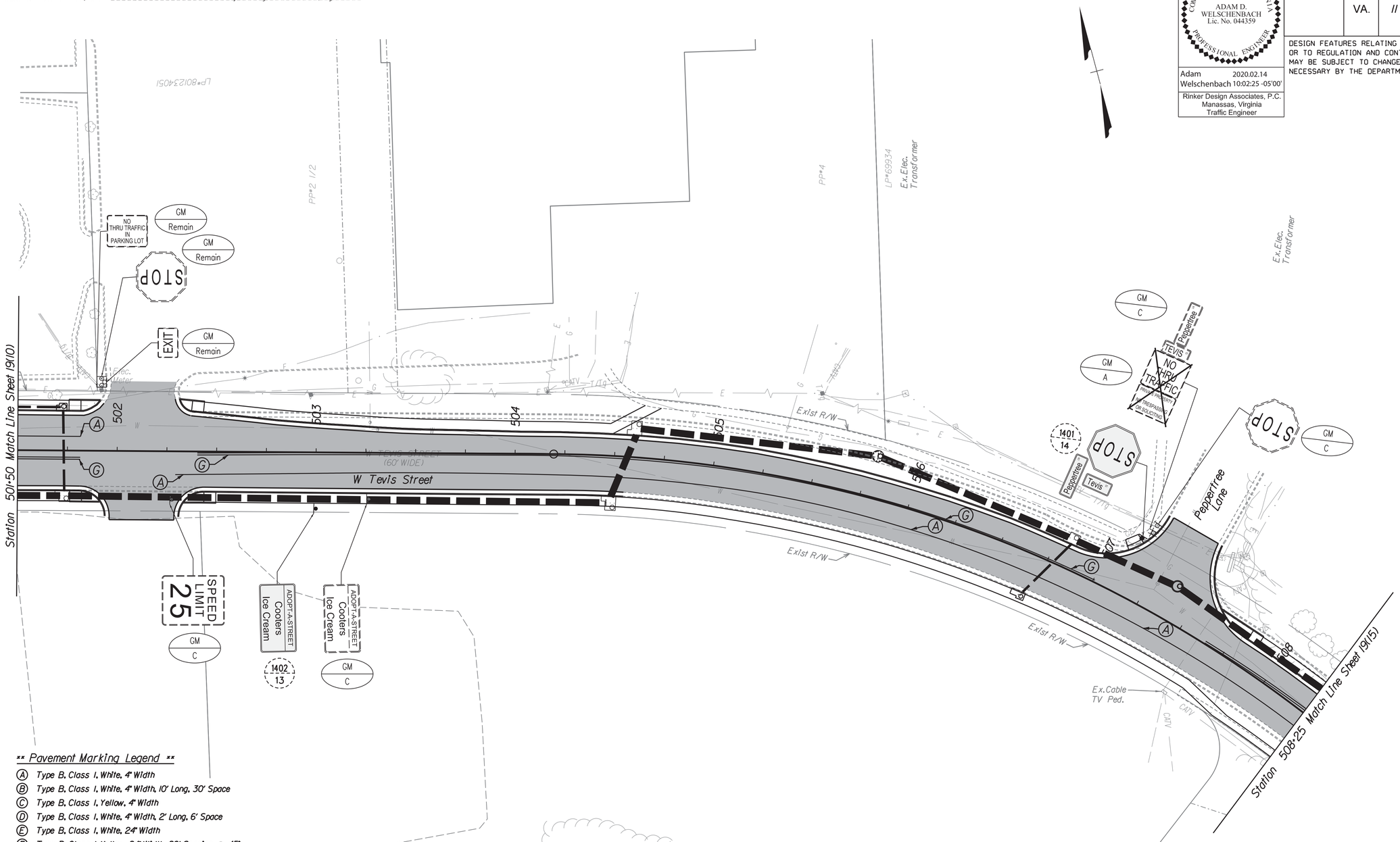

** Pavement Marking Legend **

- (A) Type B, Class I, White, 4" Width
- (B) Type B, Class I, White, 4" Width, 10' Long, 30' Space
- (C) Type B, Class I, Yellow, 4" Width
- (D) Type B, Class I, White, 4" Width, 2' Long, 6' Space
- (E) Type B, Class I, White, 24" Width
- (F) Type B, Class I, Yellow, 24" Width, 20' Spacing @ 45°
- (G) Type B, Class I, Double Yellow, 4" Width, 4" Space
- (H) Type B, Class I, White, 6" Width
- Type B, Class I, White, Pavement Marking Elongated Arrow, Left
- Type B, Class VI, White, Pavement Marking Message, Bicycle Arrow
- Type B, Class VI, White, Pavement Marking Message, Bicycle Lane Symbol
- Shading Denotes Areas of New Surface Pavement/Concrete

Notes: 1. Any existing condition that does not reflect the pavement marking plan as shown on this sheet shall be completely eradicated per VDOT Standards.

COMMONWEALTH OF VIRGINIA
ADAM D. WELSCHENBACH
Lic. No. 044359
PROFESSIONAL ENGINEER

Adam Welschenbach 2020.02.14 10:02:25 -05'00'
Rinker Design Associates, P.C.
Manassas, Virginia
Traffic Engineer

REVISED	STATE	STATE ROUTE	STATE PROJECT	SHEET NO.
	VA.	11	U000-138-R04 P101, R201, C501	19(14)

DESIGN FEATURES RELATING TO CONSTRUCTION OR TO REGULATION AND CONTROL OF TRAFFIC MAY BE SUBJECT TO CHANGE AS DEEMED NECESSARY BY THE DEPARTMENT

REFERENCES
(PLAN AND DETAIL SHEETS)

Roadway Plan Sheet 14

TRAFFIC CONTROL DEVICE PLANS

SIGNING AND PAVEMENT MARKING PLAN

CITY OF WINCHESTER

SCALE	PROJECT	SHEET NO.
0 25' 50'	U000-138-R04	19(14)

Rinker Design Associates, P.C.
Civil Engineering - Surveying - Transportation
Environmental - Transportation - Right of Way Services
Office Locations
Main Office: 8609 Sudley Road, Suite 100, Manassas, VA 20110, Phone: (703) 330-9300, Fax: (703) 330-9301
Winchester: 405 Millwood Avenue, Suite 100, Winchester, VA 22601, Phone: (540) 667-2085, Fax: (540) 667-2086
Fredericksburg: 2001 Princess Anne Street, Suite 101, Fredericksburg, VA 22401, Phone: (540) 373-3300, Fax: (540) 373-3301

PROJECT MANAGER Perry Eisenach P.E. - City of Winchester (540).667-2085
SURVEYED BY, DATE Sidney Thomas L.S. - Rinker Design Associates (703).368-7373, October 2014
DESIGN BY Adam Welschenbach P.E. - Rinker Design Associates (703).334-9300
SUBSURFACE UTILITY BY, DATE Matthew Ronsiem - Mid Atlantic Utility Locating (703).378-0100, August 2014

COMMONWEALTH OF VIRGINIA
ADAM D. WELSCHENBACH
Lic. No. 044359
PROFESSIONAL ENGINEER

Adam Welschenbach 2020.02.14 10:02:08 -05'00'
Rinker Design Associates, P.C.
Manassas, Virginia
Traffic Engineer

REVISED	STATE	STATE ROUTE	STATE PROJECT	SHEET NO.
	VA.	11	U000-138-R04 P101, R201, C501	19(15)

DESIGN FEATURES RELATING TO CONSTRUCTION OR TO REGULATION AND CONTROL OF TRAFFIC MAY BE SUBJECT TO CHANGE AS DEEMED NECESSARY BY THE DEPARTMENT

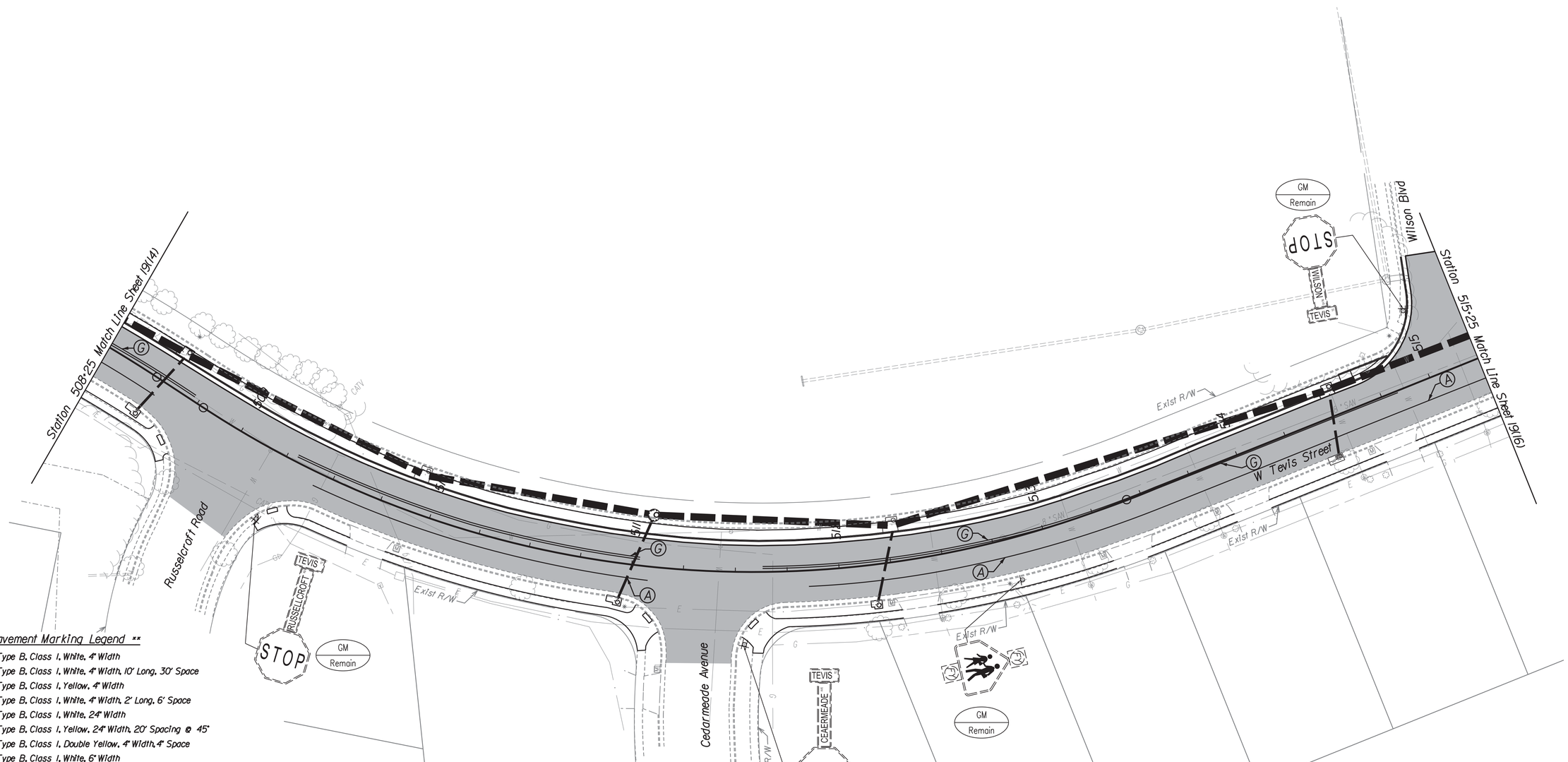

** Pavement Marking Legend **

- (A) Type B, Class I, White, 4" Width
- (B) Type B, Class I, White, 4" Width, 10' Long, 30' Space
- (C) Type B, Class I, Yellow, 4" Width
- (D) Type B, Class I, White, 4" Width, 2' Long, 6' Space
- (E) Type B, Class I, White, 24" Width
- (F) Type B, Class I, Yellow, 24" Width, 20' Spacing @ 45°
- (G) Type B, Class I, Double Yellow, 4" Width, 4" Space
- (H) Type B, Class I, White, 6" Width
- Type B, Class I, White, Pavement Marking Elongated Arrow, Left
- Type B, Class VI, White, Pavement Marking Message, Bicycle Arrow
- Type B, Class VI, White, Pavement Marking Message, Bicycle Lane Symbol
- Shading Denotes Areas of New Surface Pavement/Concrete

Notes: 1. Any existing condition that does not reflect the pavement marking plan as shown on this sheet shall be completely eradicated per VDOT Standards.

REFERENCES (PLAN AND DETAIL SHEETS)	
Roadway Plan Sheet	15

TRAFFIC CONTROL DEVICE PLANS

SIGNING AND PAVEMENT MARKING PLAN

CITY OF WINCHESTER

SCALE	PROJECT	SHEET NO.
0 25' 50'	U000-138-R04	19(15)

PROJECT MANAGER Perry Elsenach P.E. - City of Winchester (540).667-2085
SURVEYED BY, DATE Sidney Thomas L.S. - Rinker Design Associates (703).368-7373, October 2014
DESIGN BY Adam Welschenbach P.E. - Rinker Design Associates (703).334-9300
SUBSURFACE UTILITY BY, DATE Matthew Ronsem - Mid Atlantic Utility Locating (703).378-0100, August 2014

Office Locations
Corporate Headquarters: 4501 Daly Drive, Suite 100, Chantilly, VA 20151, Phone: (703) 222-7161, Fax: (703) 222-3627
Manassas, Virginia: 4001 Mayfair Avenue, Suite 100, Manassas, VA 20110, Phone: (703) 368-7373, Fax: (703) 368-9300
Rinker Design Associates, P.C.
Civil Engineering - Surveying - Transportation
Environmental - Transportation - Right of Way Services

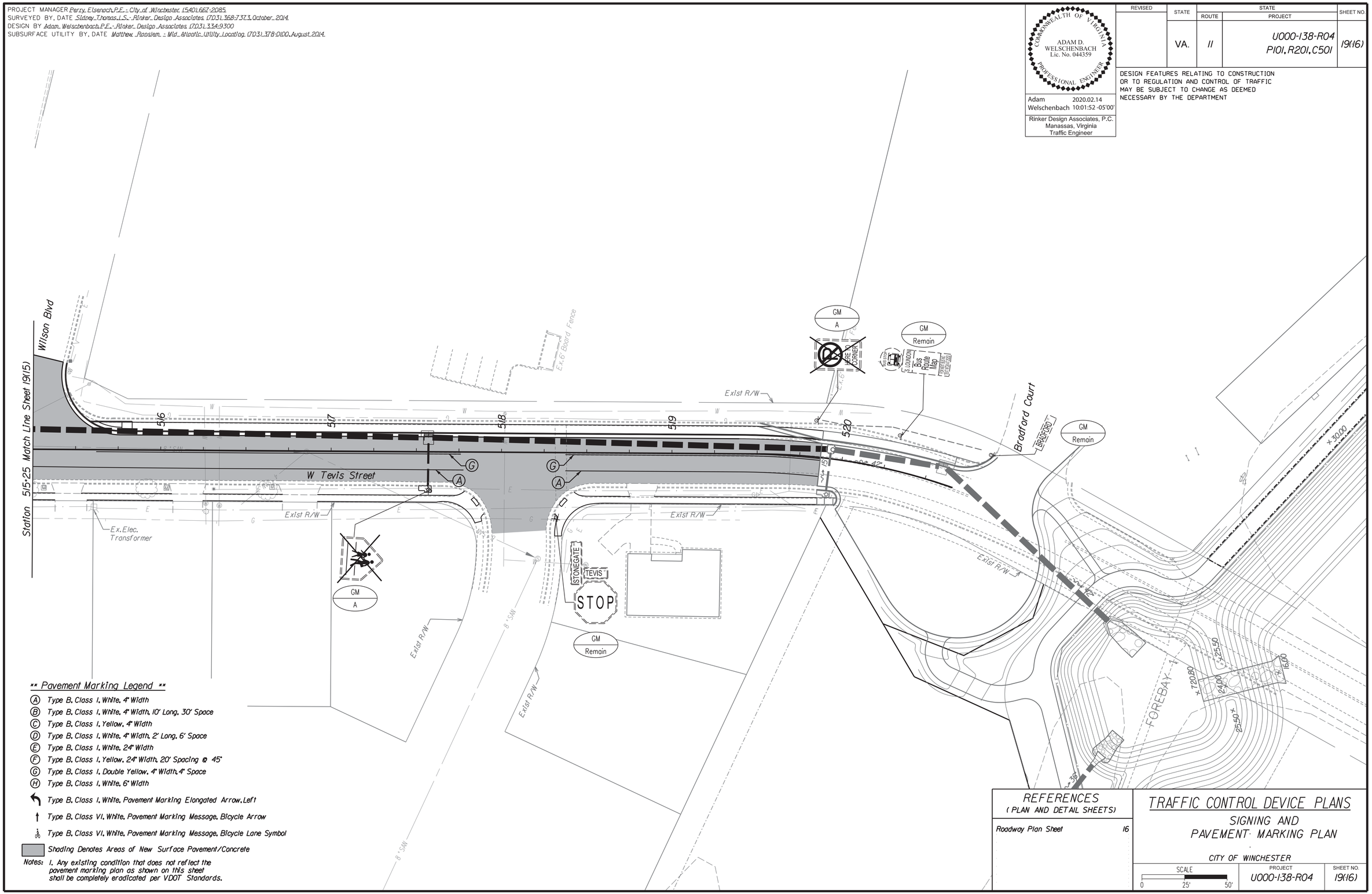

** Pavement Marking Legend **

- (A) Type B, Class I, White, 4" Width
- (B) Type B, Class I, White, 4" Width, 10' Long, 30' Space
- (C) Type B, Class I, Yellow, 4" Width
- (D) Type B, Class I, White, 4" Width, 2' Long, 6' Space
- (E) Type B, Class I, White, 24" Width
- (F) Type B, Class I, Yellow, 24" Width, 20' Spacing @ 45°
- (G) Type B, Class I, Double Yellow, 4" Width, 4" Space
- (H) Type B, Class I, White, 6" Width
- Type B, Class I, White, Pavement Marking Elongated Arrow, Left
- Type B, Class VI, White, Pavement Marking Message, Bicycle Arrow
- Type B, Class VI, White, Pavement Marking Message, Bicycle Lane Symbol
- Shading Denotes Areas of New Surface Pavement/Concrete

Notes: 1. Any existing condition that does not reflect the pavement marking plan as shown on this sheet shall be completely eradicated per VDOT Standards.

COMMONWEALTH OF VIRGINIA
ADAM D. WELSCHENBACH
Lic. No. 044359
PROFESSIONAL ENGINEER

Adam Welschenbach 2020.02.14 10:01:52 -05'00'
Rinker Design Associates, P.C.
Manassas, Virginia
Traffic Engineer

REVISED	STATE	ROUTE	PROJECT	SHEET NO.
	VA.	11	U000-138-R04 P101, R201, C501	19(16)

DESIGN FEATURES RELATING TO CONSTRUCTION OR TO REGULATION AND CONTROL OF TRAFFIC MAY BE SUBJECT TO CHANGE AS DEEMED NECESSARY BY THE DEPARTMENT

REFERENCES
(PLAN AND DETAIL SHEETS)

Roadway Plan Sheet 16

TRAFFIC CONTROL DEVICE PLANS

SIGNING AND PAVEMENT MARKING PLAN

CITY OF WINCHESTER

SCALE 0 25' 50' | PROJECT U000-138-R04 | SHEET NO. 19(16)

PROJECT MANAGER Perry Eisenach, P.E. - City of Winchester (540) 667-2085
SURVEYED BY, DATE Sidney Thomas, L.S. - Rinker Design Associates (703) 368-7373, October 2014
DESIGN BY John A. Giometti, P.E. - Rinker Design Associates (703) 334-0060
SUBSURFACE UTILITY BY, DATE Matthew Bansiem - Mid Atlantic Utility Locating (703) 378-0100, August 2014

City of Winchester Water and Sewer Main Relocation Valley Avenue Improvements

JOHN A. GIOMETTI
Lic. No. 032300
COMMONWEALTH OF VIRGINIA
PROFESSIONAL ENGINEER

John A Giometti
2020.02.14
17:17:48-05'00'

Rinker Design Assoc., P.C.
Fredericksburg, Virginia
RESPONSIBLE ENGINEER

REVISED	STATE	STATE ROUTE	STATE PROJECT	SHEET NO.
	VA.	11	U000-138-R04 R201,C501	20

DESIGN FEATURES RELATING TO CONSTRUCTION OR TO REGULATION AND CONTROL OF TRAFFIC MAY BE SUBJECT TO CHANGE AS DEEMED NECESSARY BY THE DEPARTMENT

General Notes

1. ALL CONSTRUCTION AND MATERIALS SHALL CONFORM WHERE APPLICABLE TO THE CITY OF WINCHESTER PUBLIC SERVICES STANDARDS MANUAL, LATEST EDITION, UNLESS OTHERWISE NOTED.

2. THE EXISTING UTILITIES SHOWN ARE FROM AVAILABLE RECORDS AND FIELD SURVEYS. THE CONTRACTOR SHALL VERIFY ALL INFORMATION TO HIS OWN SATISFACTION.

3. IF DURING CONSTRUCTION THE CONTRACTOR SHOULD ENCOUNTER UTILITIES OTHER THAN THOSE SHOWN ON THE PLANS, THEY SHALL IMMEDIATELY NOTIFY THE CITY OF WINCHESTER AND TAKE NECESSARY AND PROPER STEPS TO PROTECT EXISTING UTILITIES AND MAINTAIN UNINTERRUPTED SERVICE. ANY DAMAGE INCURRED SHALL BE REPAIRED IMMEDIATELY TO THE SATISFACTION OF THE UITLITY OWNER AND AT NO EXPENSE TO THE CITY OF WINCHESTER PUBLIC SERVICES. ANY DAMAGES OR INTERRUPTION OF SERVICE SHALL BE REPORTED IMMEDIATELY TO THE CITY OF WINCHESTER PUBLIC SERVICES.

4. ALL PIPE ELEVATIONS SHOWN ARE INVERT UNLESS OTHERWISE SPECIFIED ON THE DRAWINGS.

5. THE CONTRACTOR SHALL CONTACT MS. KELLY HENSHAW OF THE CITY OF WINCHESTER PUBLIC SERVICES, AT (540) 667-2387 AT LEAST FIVE (5) WORKING DAYS PRIOR TO COMMENCING UTILITY RELOCATION WORK.

6. THE CONTRACTOR SHALL MAINTAIN CONTINUOUS WATER AND SANITARY SEWER SERVICE TO ALL CUSTOMERS DURING SYSTEM SCHEDULED OUTAGES BY INSTALLING TEMPORARY BYPASS/PUMP AROUND PIPING AND APPURTENANCES. THE COSTS FOR INSTALLING, OPERATING, AND REMOVING TEMPORARY PIPING REQUIRED TO MAINTAIN CONTINUOUS WATER AND SANITARY SEWER SERVICE DURING WATER AND SANITARY TIE-INS, SHALL BE INCLUDED IN THE UNIT PRICE BID FOR THE PROPOSED WATER MAIN OR SANITARY SEWER.

7. THE CONTRACTOR SHALL PROVIDE THE CITY OF WINCHESTER PUBLIC SERVICES A SCHEDULE OF WORK AND MATERIALS FOR ANY PLANNED SANITARY SEWER PUMP AROUND, SANITARY SHUT DOWN, OR WATER SYSTEM SHUT DOWN FOR REVIEW. CITY OF WINCHESTER PUBLIC SERVICES MUST APPROVE THE CONTRACTOR'S PLAN PRIOR TO SCHEDULING OF WORK REQUIRING A SHUT DOWN. WATER OR SANITARY SEWER SHUT DOWNS APPROVED BY THE CITY OF WINCHESTER PUBLIC SERVICES ARE TO BE SCHEDULED TWO (2) WEEKS IN ADVANCE. THE CITY OF WINCHESTER PUBLIC SERVICES RESERVES THE RIGHT TO DICTATE TIME AND DAY OF WHEN THE WATER/SEWER SYSTEMS CAN BE SHUTDOWN. THE CONTRACTOR SHALL COORDINATE WITH THE THE CITY OF WINCHESTER PUBLIC SERVICES INSPECTOR TO PROVIDE WRITTEN NOTICE TO CUSTOMERS AFFECTED BY A SHUT DOWN WITH FORTY-EIGHT (48) HOURS OF ADVANCE NOTICE PRIOR TO THE ACTUAL SHUT OFF OF ANY LINE.

8. ALL PIPE TO BE ABANDONED SHALL BE FLUSHED UNTIL CLEAR WATER IS DISCHARGED AND THEN PLUGGED/CAPPED AT ALL TERMINATIONS. ALL PIPE AND PIPE SYSTEMS TO BE REMOVED SHALL BE REMOVED TO A MINIMUM OF TWO PIPE LENGTHS OR 36' FROM THE CLOSEST REMAINING LIVE MAIN. THE COST FOR THE ABANDONMENT OR REMOVAL OF EXISTING WATER MAIN, EXISTING FIRE HYDRANT ASSEMBLIES OR SANITARY SEWER FORCE MAIN SHALL BE INCLUDED IN THE UNIT PRICE BID FOR DJ. WATER MAIN OR SANITARY SEWER.

9. THE CONTRACTOR SHALL MAINTAIN A SET OF RECORD DRAWINGS ON SITE TO BE SUBMITTED TO THE THE CITY OF WINCHESTER PUBLIC SERVICES PRIOR TO COMPLETION.

10. THE CONTRACTOR SHALL NOTIFY MISS UTILITY FOR UTILITY LOCATION AT LEAST 3 FULL WORKING DAYS BEFORE BEGINNING CONSTRUCTION.

11. ALL WATER AND SEWER RELOCATION WORK BY THE CONTRACTOR SHALL BE DONE IN ACCORDANCE WITH THE NOISE CONTROL ORDINANCE OF THE CITY OF WINCHESTER.

12. THE COSTS FOR THE REMOVAL OR ABANDONMENT OF PIPE OR MANHOLES SHALL BE INCLUDED IN THE UNIT PRICE BID FOR THE PIPE CAUSING THE REMOVAL/ABANDONMENT.

13. ALL CONSTRUCTION SHALL COMPLY WITH THE VIRGINIA EROSION & SEDIMENT CONTROL HANDBOOK.

14. THE CONTRACTOR SHALL ADJUST, AS NECESSARY, METERS, VALVES AND MANHOLE TOPS TO MATCH THE PROPOSED GRADE.

15. EXISTING METERS, FIRE HYDRANTS, VALVES AND OTHER APPURTENANCES BEING REPLACED SHALL BE REMOVED & RETURNED TO THE CITY OF WINCHESTER PUBLIC SERVICES DEPARTMENT.

16. NEW METER SETTINGS SHALL CONFORM TO THE CITY OF WINCHESTER PUBLIC SERVICES STANDARDS MANUAL, LATEST EDITION.

WATER AND SEWER PLAN INDEX OF SHEETS		
Sheet No.	20	Water and Sewer Line Index and Notes
Sheet No.	20(1)	Water and Sanitary Sewer Details
Sheet No.	20(3) thru 20(16)	Water & Sanitary Sewer Relocation Plan
Sheet No.	20(17)	Water Line Profiles

Rinker Design Associates, P.C.
Civil Engineering • Surveying • Environmental
Transportation • Land Development
Right of Way Services
Office Locations
Fredericksburg, Virginia
Main Office
405 Sophia Street
Suite 300
Fredericksburg, VA 22401
Phone: (540) 373-1469
Fax: (540) 373-2217
Northern Virginia
4417 Brookfield Corporate Drive
Suite 100
Chantilly, VA 20151
Phone: (703) 378-0100
Fax: (703) 378-0080
Shenandoah Valley
2101 Apple Grove Drive
Suite 101
Staunton, VA 24401
Phone: (540) 885-5310
Fax: (540) 885-5311

2/14/2020
9:08:00 AM

d1030130200(3).dgn
Plotted By: mbeales

PROJECT MANAGER Perry Eisenach, P.E. - City of Winchester (540) 667-2085
SURVEYED BY, DATE Sidney Thomas, L.S. - Rinker Design Associates (703) 368-7373, October 2014
DESIGN BY John A. Giometti, P.E. - Rinker Design Associates (703) 334-0060
SUBSURFACE UTILITY BY, DATE Matthew Bansiem - Mid Atlantic Utility Locating (703) 378-0100, August 2014

Water & Sanitary Sewer Relocation Plan

Utility Owners:

Water & Sewer:

City of Winchester
Contact: Drew Brady
Email: drew.brady@winchesterva.gov

Gas:

Washington Gas
350 Hillandale Lane
PO Box 2400
Winchester, VA 22604
Contact: David Flakenstein
Phone: (540) 868-7911
Email: dfl1748@washgas.com

Telecomm:

Verizon Virginia, Inc.
404 Hillandale Lane
Winchester, VA 22602
Contact: Michael Wallace
Phone: (540) 665-3153
Email: michael.e.wallace@verizon.com

Comcast
Contact: Douty Dwayne
Phone: (240) 372-6694
Email: dwayne_douty@comcast.com

Shentel
500 Shentel Way
PO Box 459
Edinburg, VA 22824
Contact: Steve Heltzel
Phone: (540) 984-5363
Email: steve.heltzel@emp.shentel.com

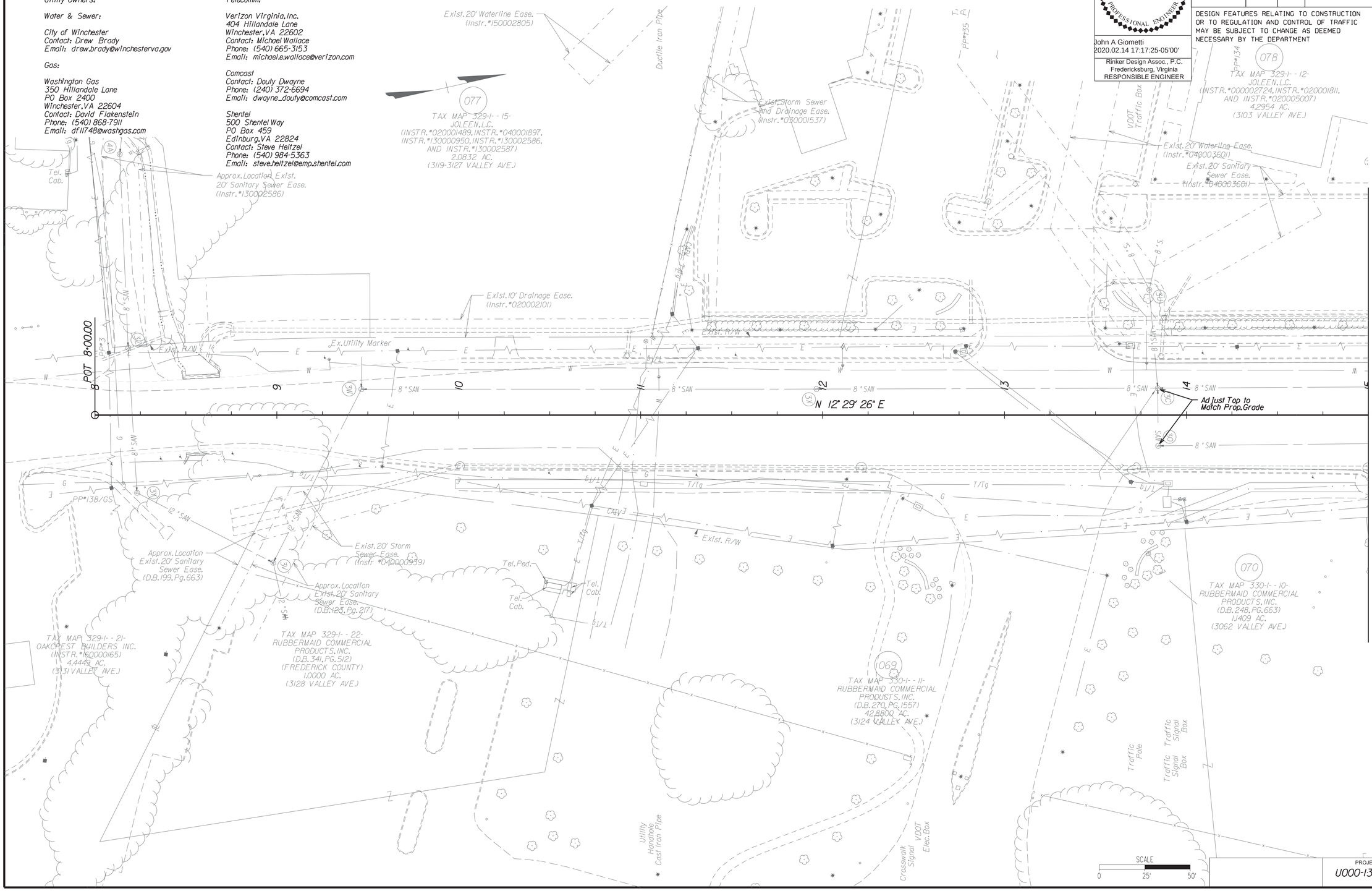

COMMONWEALTH OF VIRGINIA
JOHN A. GIOMETTI
Lic. No. 032300
PROFESSIONAL ENGINEER

John A Giometti
2020.02.14 17:17:25-05'00'

Rinker Design Assoc., P.C.
Fredericksburg, Virginia
RESPONSIBLE ENGINEER

REVISED	STATE	STATE ROUTE	STATE PROJECT	SHEET NO.
	VA.	11	U000-138-R04 R201, C501	20(3)

DESIGN FEATURES RELATING TO CONSTRUCTION OR TO REGULATION AND CONTROL OF TRAFFIC MAY BE SUBJECT TO CHANGE AS DEEMED NECESSARY BY THE DEPARTMENT

PROJECT	SHEET NO.
U000-138-R04	20(3)

Rinker Design Associates, P.C.
Civil Engineering • Surveying • Environmental
Transportation • Land Development • Right of Way Services
SHOPTALK@RDA.COM

Office Locations
Fredericksburg, Virginia
Rinker Design Associates, P.C.
Suite 100
Fredericksburg, VA 22401
Phone: (540) 373-4030
Fax: (540) 373-4031

Winchester, Virginia
Rinker Design Associates, P.C.
401 Millwood Avenue
Suite 100
Winchester, VA 22601
Phone: (540) 662-4067
Fax: (540) 662-4068

Leesburg, Virginia
Rinker Design Associates, P.C.
207 Plaza Green Drive
Suite 100
Leesburg, VA 20177
Phone: (703) 771-9630
Fax: (703) 771-9631

2/14/2020
9:08:03 AM

d1030130200(04).dgn
Plotted By: mbeales

PROJECT MANAGER Perry Eisenach, P.E. - City of Winchester (540) 667-2085
SURVEYED BY, DATE Sidney Thomas, L.S. - Rinker Design Associates (703) 368-7373, October 2014
DESIGN BY John A. Giometti, P.E. - Rinker Design Associates (703) 334-0060
SUBSURFACE UTILITY BY, DATE Matthew Bansiem - Mid Atlantic Utility Locating (703) 378-0100, August 2014

Water & Sanitary Sewer Relocation Plan

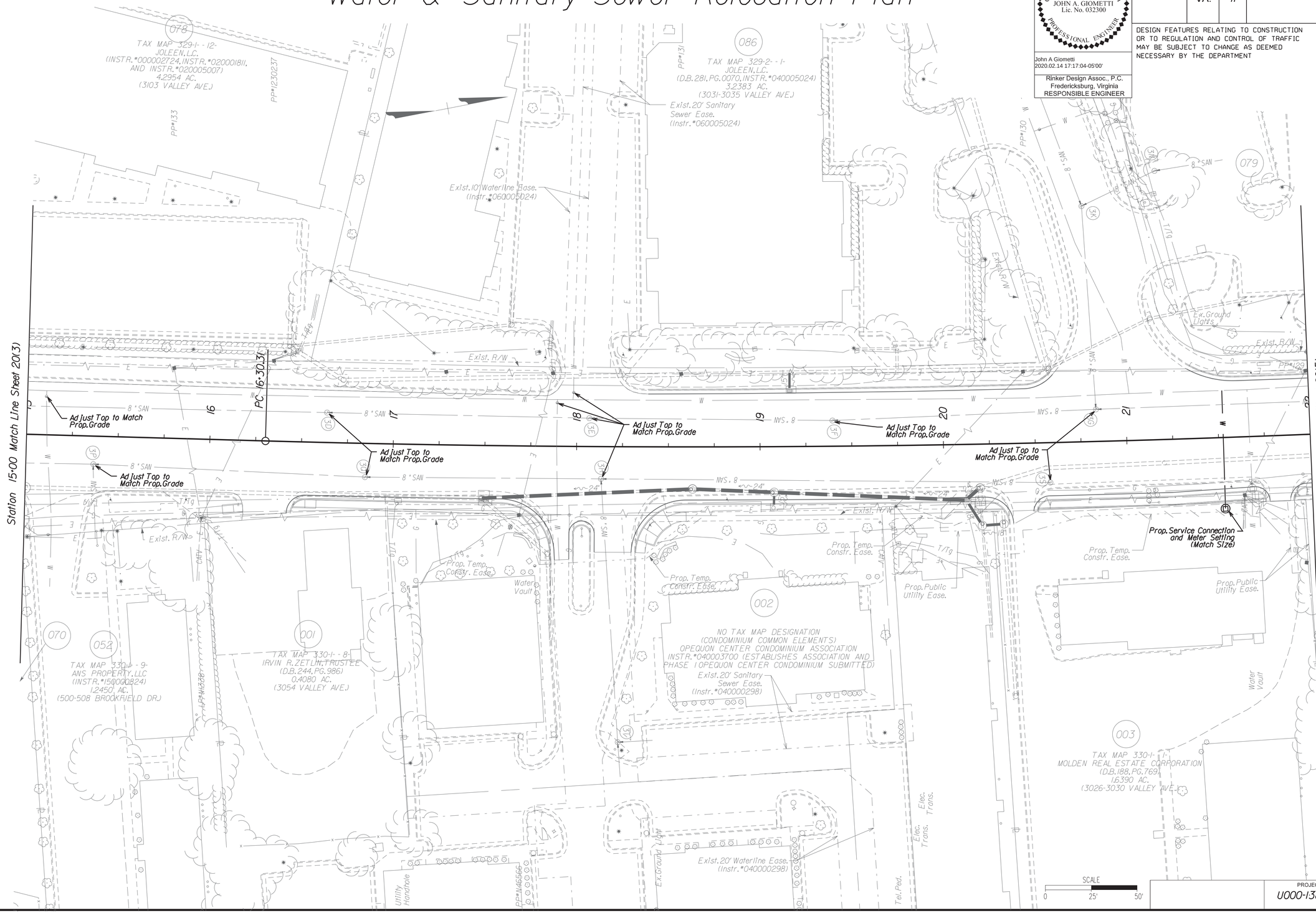

COMMONWEALTH OF VIRGINIA
JOHN A. GIOMETTI
Lic. No. 032300
PROFESSIONAL ENGINEER

John A Giometti
2020.02.14 17:17:04-05'00'

Rinker Design Assoc., P.C.
Fredericksburg, Virginia
RESPONSIBLE ENGINEER

REVISED	STATE	STATE ROUTE	STATE PROJECT	SHEET NO.
	VA.	11	U000-138-R04 R201, C501	20(4)

DESIGN FEATURES RELATING TO CONSTRUCTION OR TO REGULATION AND CONTROL OF TRAFFIC MAY BE SUBJECT TO CHANGE AS DEEMED NECESSARY BY THE DEPARTMENT

PROJECT	SHEET NO.
U000-138-R04	20(4)

Rinker Design Associates, P.C.
Civil Engineering - Surveying - Land Planning
Transportation - Environmental
Right of Way Services
SHOPPING CENTER DESIGN

Office Locations
Fredericksburg: 4101 Plank Road, Suite 100, Fredericksburg, VA 22407, Phone: (540) 373-4030, Fax: (540) 373-4031
Winchester: 107 Nor'Star Boulevard, Suite 100, Winchester, VA 22601, Phone: (540) 662-4085, Fax: (540) 662-4086
Leesburg: 1000 Harrison Street, Suite 100, Leesburg, VA 20175, Phone: (703) 777-7510, Fax: (703) 777-7511

2/14/2020
9:08:06 AM

d1030130200051.dgn
Plotted By: mbeales

PROJECT MANAGER Perry Eisenach, P.E. - City of Winchester (540) 667-2085
SURVEYED BY, DATE Sidney Thomas, L.S. - Rinker Design Associates (703) 368-7373, October 2014
DESIGN BY John A. Giometti, P.E. - Rinker Design Associates (703) 334-0060
SUBSURFACE UTILITY BY, DATE Matthew Banslem - Mid Atlantic Utility Locating (703) 378-0100, August 2014

Water & Sanitary Sewer Relocation Plan

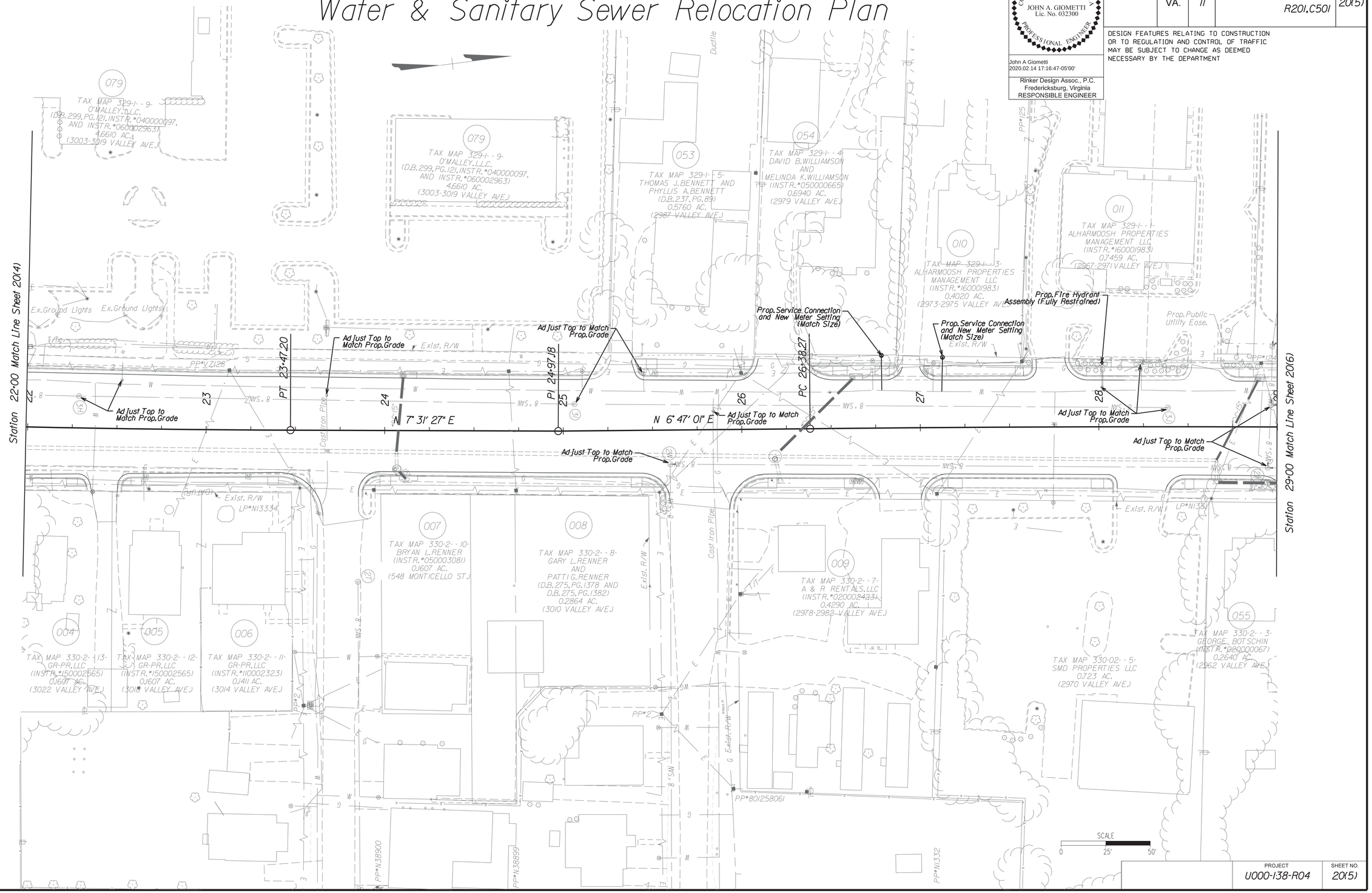

Rinker Design Associates, P.C.
Civil Engineering - Surveying - Environmental
Transportation - Land Development
Right of Way Services

Office Locations
Rinker Design Associates, P.C.
Fredericksburg, Virginia
Tel: (540) 373-2000
Fax: (540) 373-2001
Rinker Design Associates
Reston, VA 20190
Tel: (703) 334-0060
Fax: (703) 334-0061
4101 Plaza Drive, Suite 100
Fredericksburg, VA 22407
Tel: (540) 373-2000
Fax: (540) 373-2001

COMMONWEALTH OF VIRGINIA
JOHN A. GIOMETTI
Lic. No. 032300
PROFESSIONAL ENGINEER

John A Giometti
2020.02.14 17:16:47-05'00'

Rinker Design Assoc., P.C.
Fredericksburg, Virginia
RESPONSIBLE ENGINEER

REVISED	STATE	STATE ROUTE	STATE PROJECT	SHEET NO.
	VA.	11	U000-138-R04 R201, C501	20(5)

DESIGN FEATURES RELATING TO CONSTRUCTION OR TO REGULATION AND CONTROL OF TRAFFIC MAY BE SUBJECT TO CHANGE AS DEEMED NECESSARY BY THE DEPARTMENT

PROJECT	SHEET NO.
U000-138-R04	20(5)

2/14/2020
9:08:09 AM

d10301302006.dgn
Plotted By: mbeales

PROJECT MANAGER Perry Eisenach, P.E. - City of Winchester (540) 667-2085
SURVEYED BY, DATE Sidney Thomas, L.S. - Rinker Design Associates (703) 368-7373, October 2014
DESIGN BY John A. Giometti, P.E. - Rinker Design Associates (703) 334-0060
SUBSURFACE UTILITY BY, DATE Matthew Bansiem - Mid Atlantic Utility Locating (703) 378-0100, August 2014

Water & Sanitary Sewer Relocation Plan

COMMONWEALTH OF VIRGINIA
JOHN A. GIOMETTI
Lic. No. 032300
PROFESSIONAL ENGINEER

John A Giometti
2020.02.14 17:16:30-05'00'

Rinker Design Assoc., P.C.
Fredericksburg, Virginia
RESPONSIBLE ENGINEER

REVISED	STATE	STATE ROUTE	STATE PROJECT	SHEET NO.
	VA.	11	U000-138-R04 R201,C501	20(6)

DESIGN FEATURES RELATING TO CONSTRUCTION OR TO REGULATION AND CONTROL OF TRAFFIC MAY BE SUBJECT TO CHANGE AS DEEMED NECESSARY BY THE DEPARTMENT

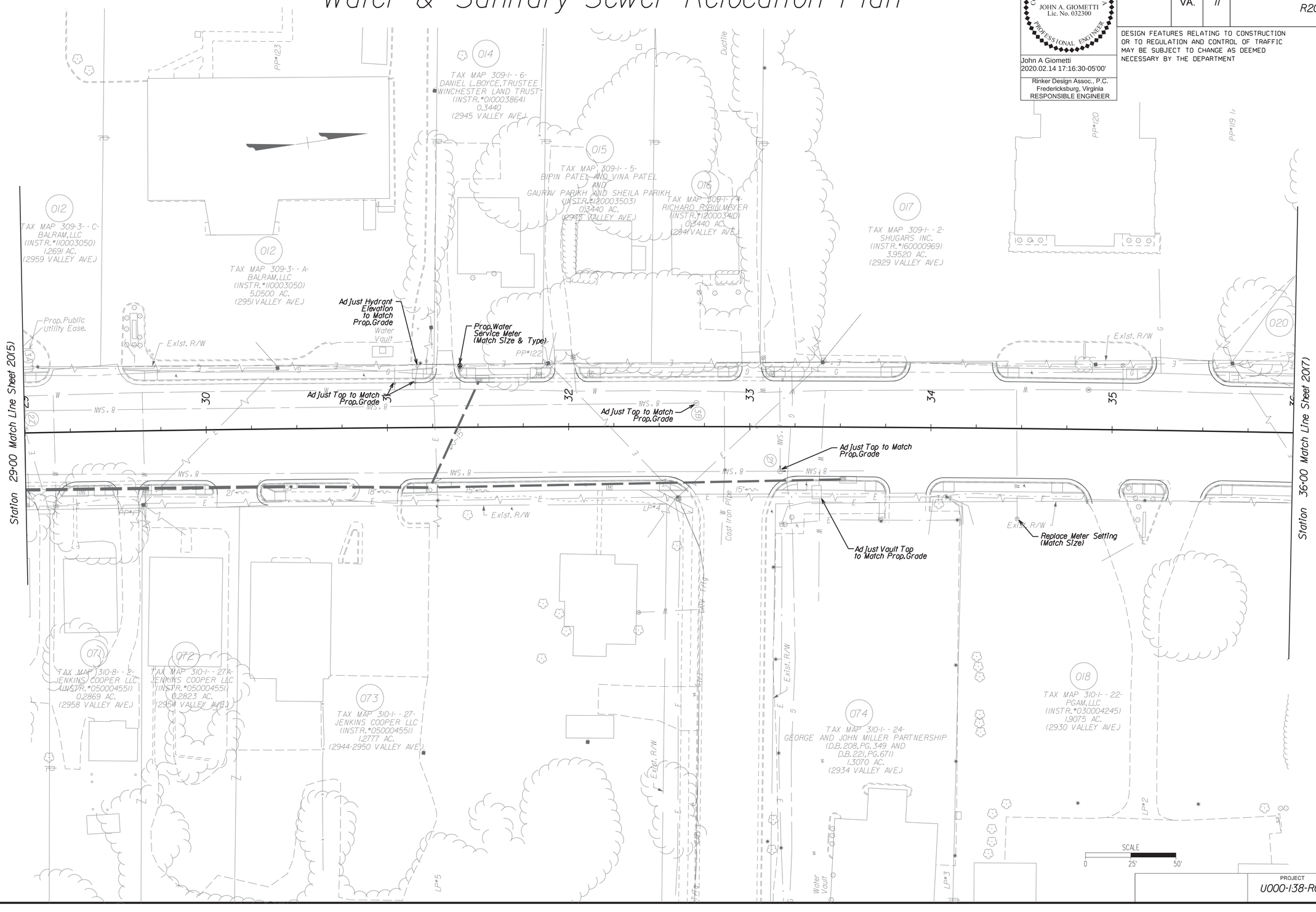

PROJECT	SHEET NO.
U000-138-R04	20(6)

Rinker Design Associates, P.C.
Civil Engineering • Surveying • Land Planning
Environmental • Transportation
Right of Way Services

Office Locations
Corporate Headquarters
10211 Fredericksburg Road
Suite 100
Ashland, VA 23005
Phone: (804) 798-2999
Fax: (804) 798-2988

Fredericksburg Office
2021 Mary Lewis Drive
Suite 101
Fredericksburg, VA 22401
Phone: (540) 373-4650
Fax: (540) 373-4651

Northern Virginia Office
4229 Lafayette Center Drive
Suite 1950
Chantilly, VA 20151
Phone: (703) 378-0100
Fax: (703) 378-0108

PROJECT MANAGER Perry Eisenach, P.E. - City of Winchester (540) 667-2085
SURVEYED BY, DATE Sidney Thomas, L.S. - Rinker Design Associates (703) 368-7373, October 2014
DESIGN BY John A. Giometti, P.E. - Rinker Design Associates (703) 334-0060
SUBSURFACE UTILITY BY, DATE Matthew Bansiem - Mid Atlantic Utility Locating (703) 378-0100, August 2014

Water & Sanitary Sewer Relocation Plan

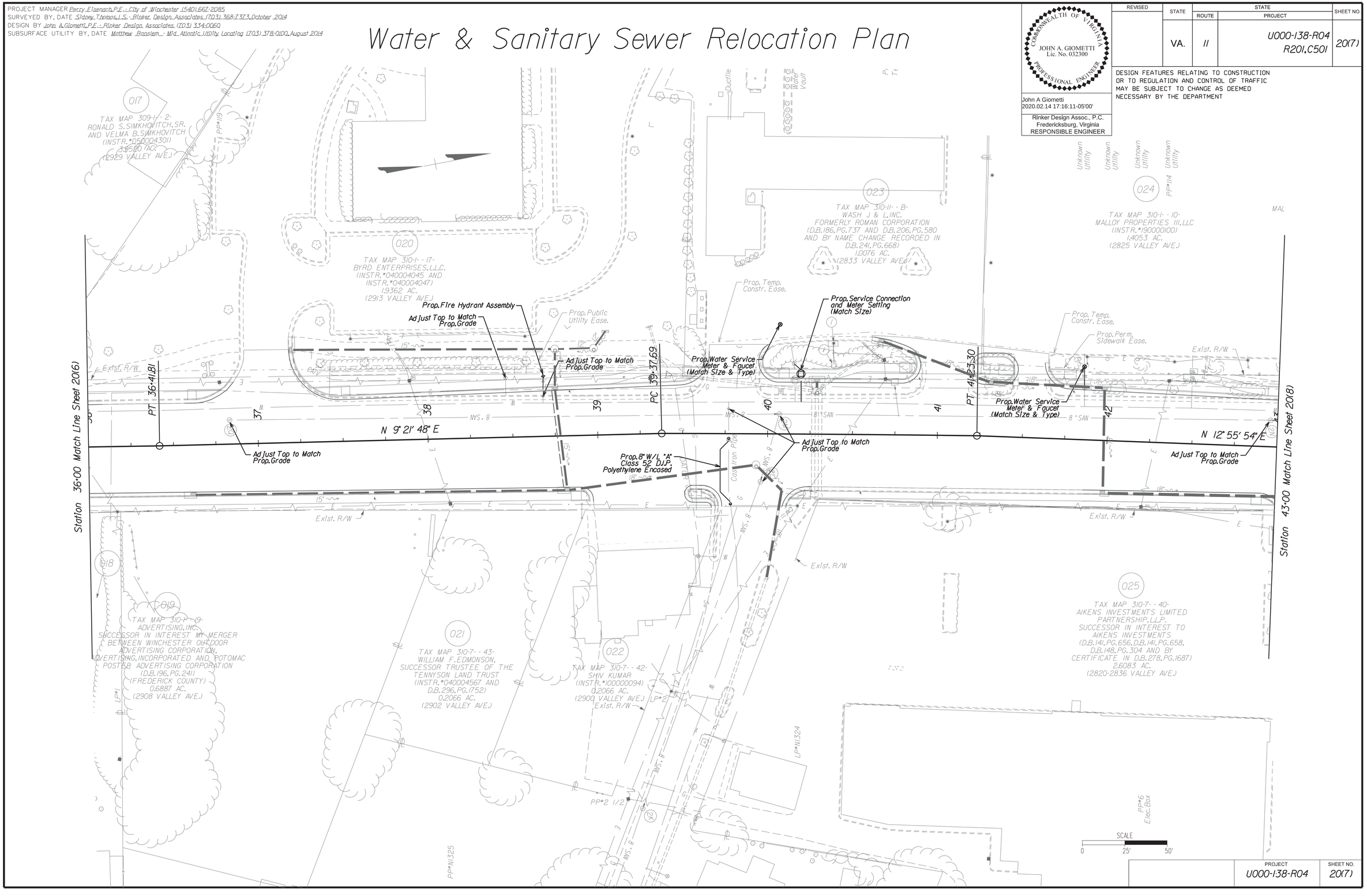

REVISED	STATE	ROUTE	PROJECT	SHEET NO.
	VA.	11	U000-138-R04 R201, C501	20(7)

COMMONWEALTH OF VIRGINIA
JOHN A. GIOMETTI
Lic. No. 032300
PROFESSIONAL ENGINEER

John A Giometti
2020.02.14 17:16:11-05'00'

Rinker Design Assoc., P.C.
Fredericksburg, Virginia
RESPONSIBLE ENGINEER

DESIGN FEATURES RELATING TO CONSTRUCTION OR TO REGULATION AND CONTROL OF TRAFFIC MAY BE SUBJECT TO CHANGE AS DEEMED NECESSARY BY THE DEPARTMENT

PROJECT	SHEET NO.
U000-138-R04	20(7)

Rinker Design Associates, P.C.
Civil Engineering - Surveying - Transportation
Environmental - Transportation - Right of Way Services
SHOPTALK VIEW D.B.E.

Office Locations
Corporate Headquarters
10551 Battleview Parkway
Suite 100
Manassas, VA 20109
Phone: (703) 334-0060
Fax: (703) 335-0288

Northern Virginia
4670 Chain Bridge Road
Suite 100
Fairfax, VA 22030
Phone: (703) 273-8000
Fax: (703) 273-8001

Fredericksburg
4101 Plank Road
Suite 101
Fredericksburg, VA 22407
Phone: (540) 373-8210
Fax: (540) 373-8215

2/14/2020
9:08:14 AM

d1030130200(08).dgn
Plotted By: mbeales

PROJECT MANAGER Perry Eisenach, P.E. - City of Winchester (540) 667-2085
SURVEYED BY, DATE Sidney Thomas, L.S. - Rinker Design Associates (703) 368-7373, October 2014
DESIGN BY John A. Giometti, P.E. - Rinker Design Associates (703) 334-0060
SUBSURFACE UTILITY BY, DATE Matthew Bansiem - Mid Atlantic Utility Locating (703) 378-0100, August 2014

Water & Sanitary Sewer Relocation Plan

COMMONWEALTH OF VIRGINIA
JOHN A. GIOMETTI
Lic. No. 032300
PROFESSIONAL ENGINEER

John A Giometti
2020.02.14 17:15:52-05'00'

Rinker Design Assoc., P.C.
Fredericksburg, Virginia
RESPONSIBLE ENGINEER

REVISED	STATE	STATE ROUTE	STATE PROJECT	SHEET NO.
	VA.	11	U000-138-R04 R201,C501	20(8)

DESIGN FEATURES RELATING TO CONSTRUCTION OR TO REGULATION AND CONTROL OF TRAFFIC MAY BE SUBJECT TO CHANGE AS DEEMED NECESSARY BY THE DEPARTMENT

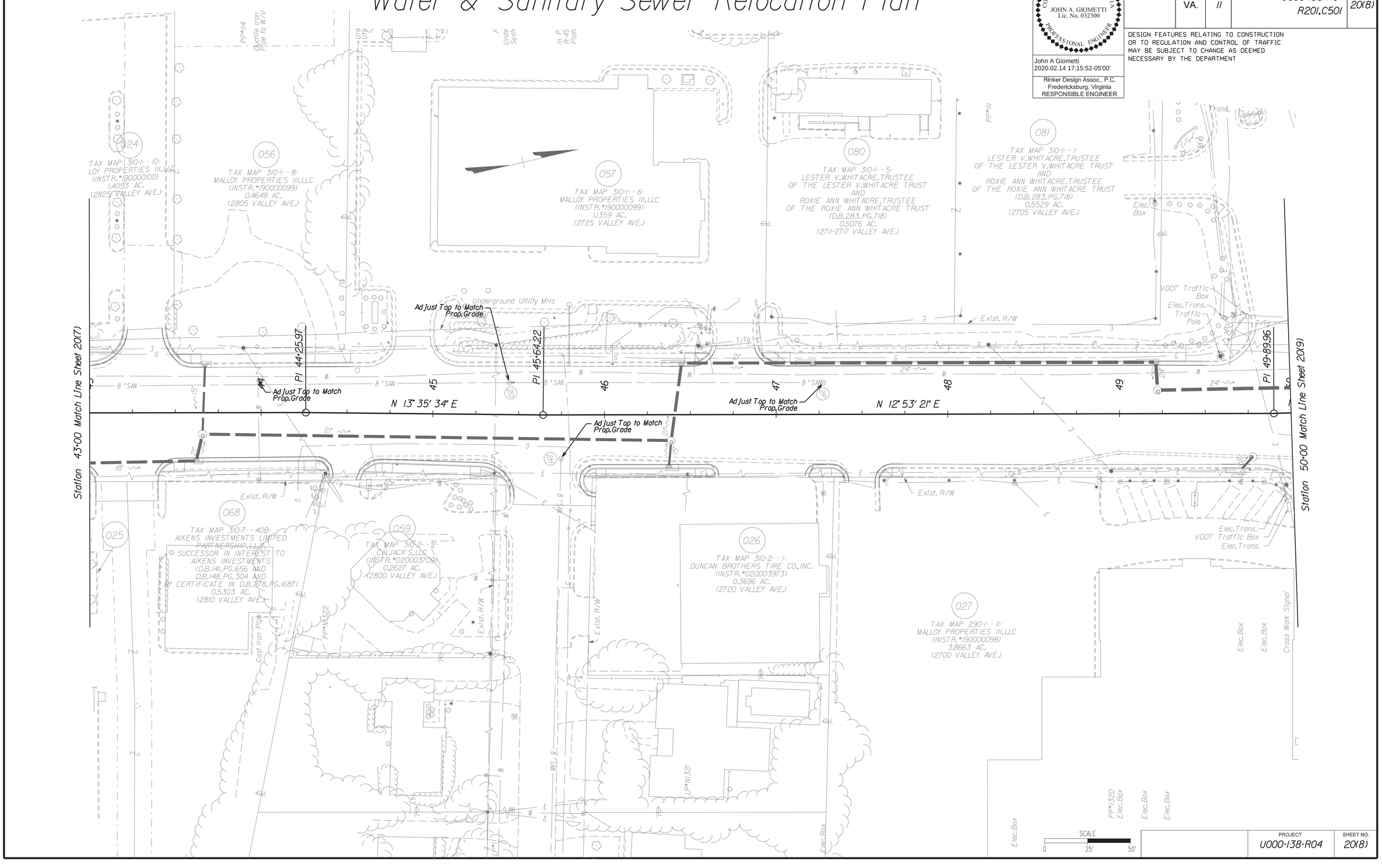

PROJECT	SHEET NO.
U000-138-R04	20(8)

Rinker Design Associates, P.C.
Civil Engineering • Surveying • Environmental
Transportation • Land Development • Right of Way Services
SHOPPING WITH THE WORLD

Office Locations
Corporate Headquarters: 4101 Fairfax Drive, Suite 100, Arlington, VA 22203, Phone: (703) 334-0060, Fax: (703) 522-0203
Fredericksburg: 4101 Fairfax Drive, Suite 100, Arlington, VA 22203, Phone: (703) 334-0060, Fax: (540) 373-0223
Richmond: 4101 Fairfax Drive, Suite 100, Arlington, VA 22203, Phone: (703) 334-0060, Fax: (804) 644-0223

2/14/2020
9:08:17 AM

d1030\3020(09).dgn
Plotted By: mbeales

PROJECT MANAGER Perry Eisenach, P.E. - City of Winchester (540) 667-2085
SURVEYED BY, DATE Sidney Thomas, L.S. - Rinker Design Associates (703) 368-7373, October 2014
DESIGN BY John A. Giometti, P.E. - Rinker Design Associates (703) 334-0060
SUBSURFACE UTILITY BY, DATE Matthew Bansiem - Mid Atlantic Utility Locating (703) 378-0100, August 2014

Water & Sanitary Sewer Relocation Plan

Rinker Design Associates, P.C.
Civil Engineering • Surveying • Environmental
Transportation • Land Development • Right of Way Services
SHOTTS NAVEE S.W.M.
Office Locations
Corporate Headquarters: 4670 Corporation Drive, Suite 100, Fairfax, VA 22030, Phone: (703) 334-0060, Fax: (703) 352-0213
Winchester: 107 Virginia Avenue, Suite 100, Winchester, VA 22601, Phone: (540) 662-4185, Fax: (540) 662-4188
Fredericksburg: 4101 Technology Boulevard, Suite 100, Fredericksburg, VA 22407, Phone: (540) 373-4650, Fax: (540) 373-4651

COMMONWEALTH OF VIRGINIA
JOHN A. GIOMETTI
Lic. No. 032300
PROFESSIONAL ENGINEER

John A Giometti
2020.02.14 17:15:34-05'00'

Rinker Design Assoc., P.C.
Fredericksburg, Virginia
RESPONSIBLE ENGINEER

REVISED	STATE	ROUTE	PROJECT	SHEET NO.
	VA.	11	U000-138-R04 R201,C501	20(9)

DESIGN FEATURES RELATING TO CONSTRUCTION OR TO REGULATION AND CONTROL OF TRAFFIC MAY BE SUBJECT TO CHANGE AS DEEMED NECESSARY BY THE DEPARTMENT

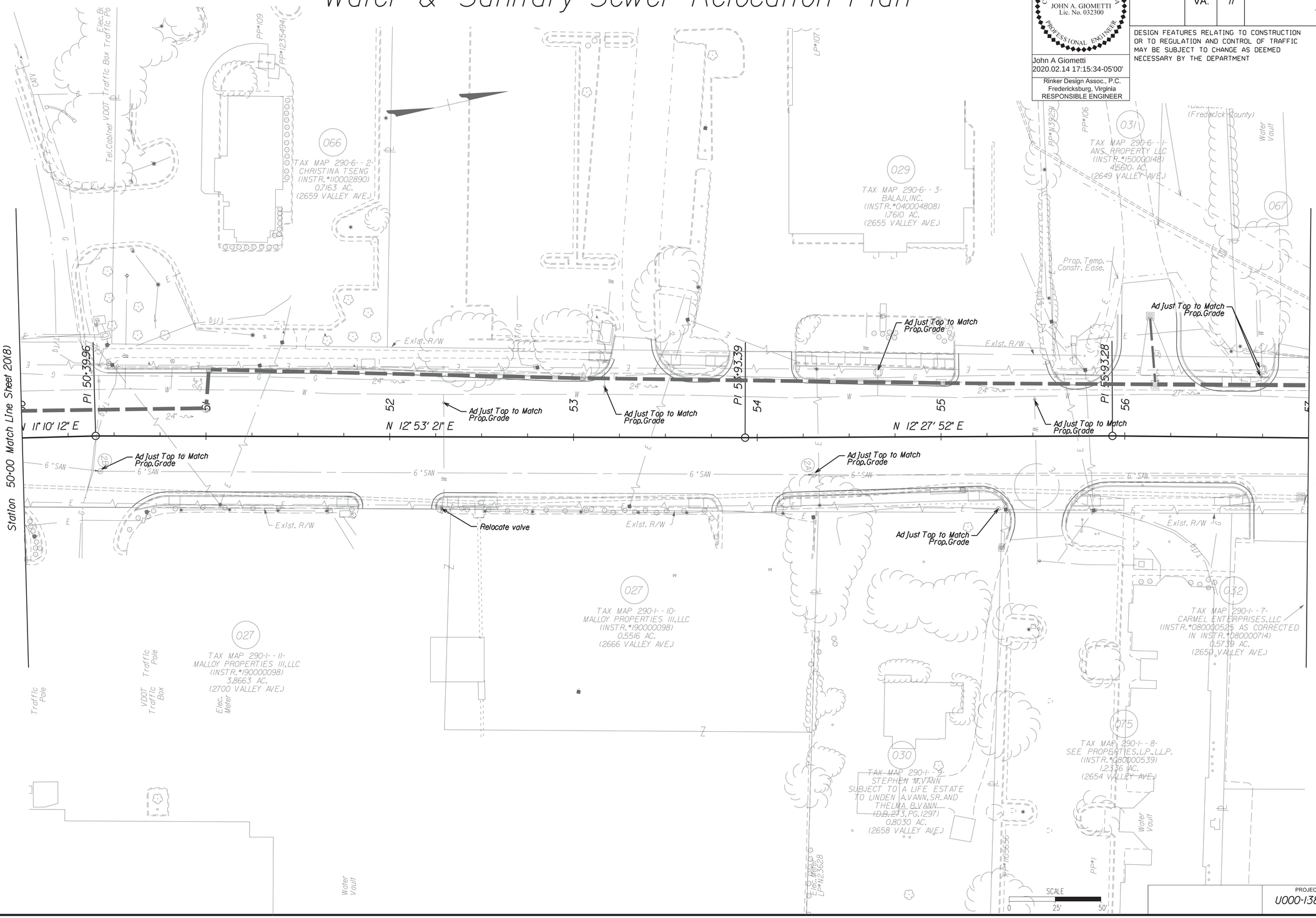

PROJECT	SHEET NO.
U000-138-R04	20(9)

2/14/2020
9:08:20 AM

d10301302010).dgn
Plotted By: mbeales

PROJECT MANAGER Perry Eisenach, P.E. - City of Winchester (540) 667-2085
SURVEYED BY, DATE Sidney Thomas, L.S. - Rinker Design Associates (703) 368-7373, October 2014
DESIGN BY John A. Giometti, P.E. - Rinker Design Associates. (703) 334-0060
SUBSURFACE UTILITY BY, DATE Matthew Bansiem - Mid Atlantic Utility Locating (703) 378-0100, August 2014

Water & Sanitary Sewer Relocation Plan

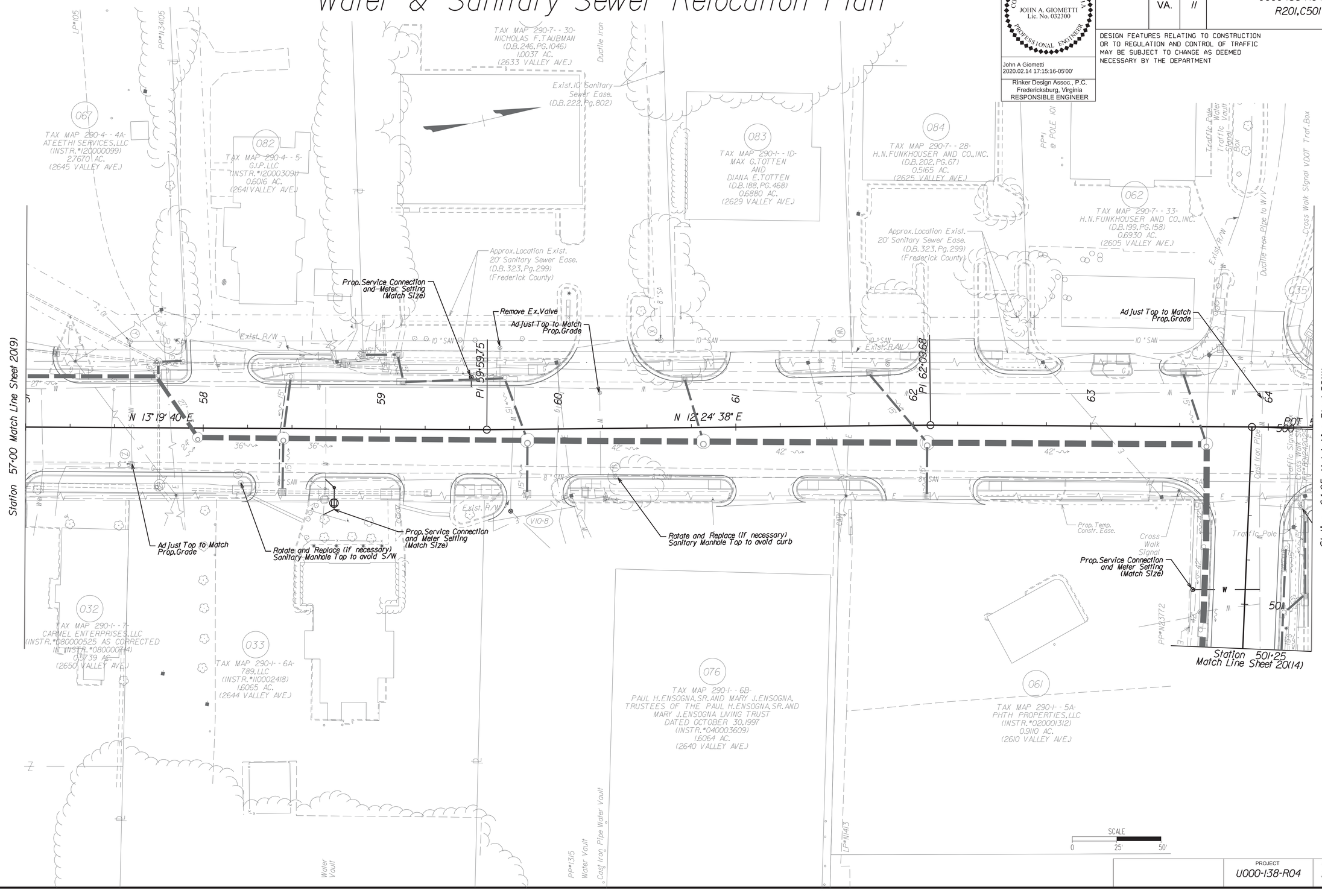

COMMONWEALTH OF VIRGINIA
JOHN A. GIOMETTI
Lic. No. 032300
PROFESSIONAL ENGINEER

John A Giometti
2020.02.14 17:15:16-05'00'

Rinker Design Assoc., P.C.
Fredericksburg, Virginia
RESPONSIBLE ENGINEER

REVISED	STATE	STATE ROUTE	STATE PROJECT	SHEET NO.
	VA.	11	U000-138-R04 R201, C501	20(10)

DESIGN FEATURES RELATING TO CONSTRUCTION OR TO REGULATION AND CONTROL OF TRAFFIC MAY BE SUBJECT TO CHANGE AS DEEMED NECESSARY BY THE DEPARTMENT

PROJECT	SHEET NO.
U000-138-R04	20(10)

Rinker Design Associates, P.C.
Civil Engineering • Surveying • Environmental
Transportation • Land Development • Right of Way Services
SHOPTALK VETTE S.B.E.
Office Locations
Corporate Headquarters: 10211 Fredericksburg Road, Suite 110, Ashland, VA 23005, Phone: (804) 798-2999, Fax: (804) 798-2900
Northern Office: 4411 Plaza Drive, Suite 100, Fairfax, VA 22030, Phone: (703) 352-1300, Fax: (703) 352-1301
Southern Office: 4411 Plaza Drive, Suite 100, Fairfax, VA 22030, Phone: (703) 352-1300, Fax: (703) 352-1301

2/14/2020
9:08:23 AM

d1030130200111.dgn
Plotted By: mbeales

PROJECT MANAGER Perry Eisenach, P.E. - City of Winchester (540) 667-2085
SURVEYED BY, DATE Sidney Thomas, L.S. - Rinker Design Associates (703) 368-7373, October 2014
DESIGN BY John A. Giometti, P.E. - Rinker Design Associates (703) 334-0060
SUBSURFACE UTILITY BY, DATE Matthew Banham - Mid Atlantic Utility Locating (703) 378-0100, August 2014

Water & Sanitary Sewer Relocation Plan

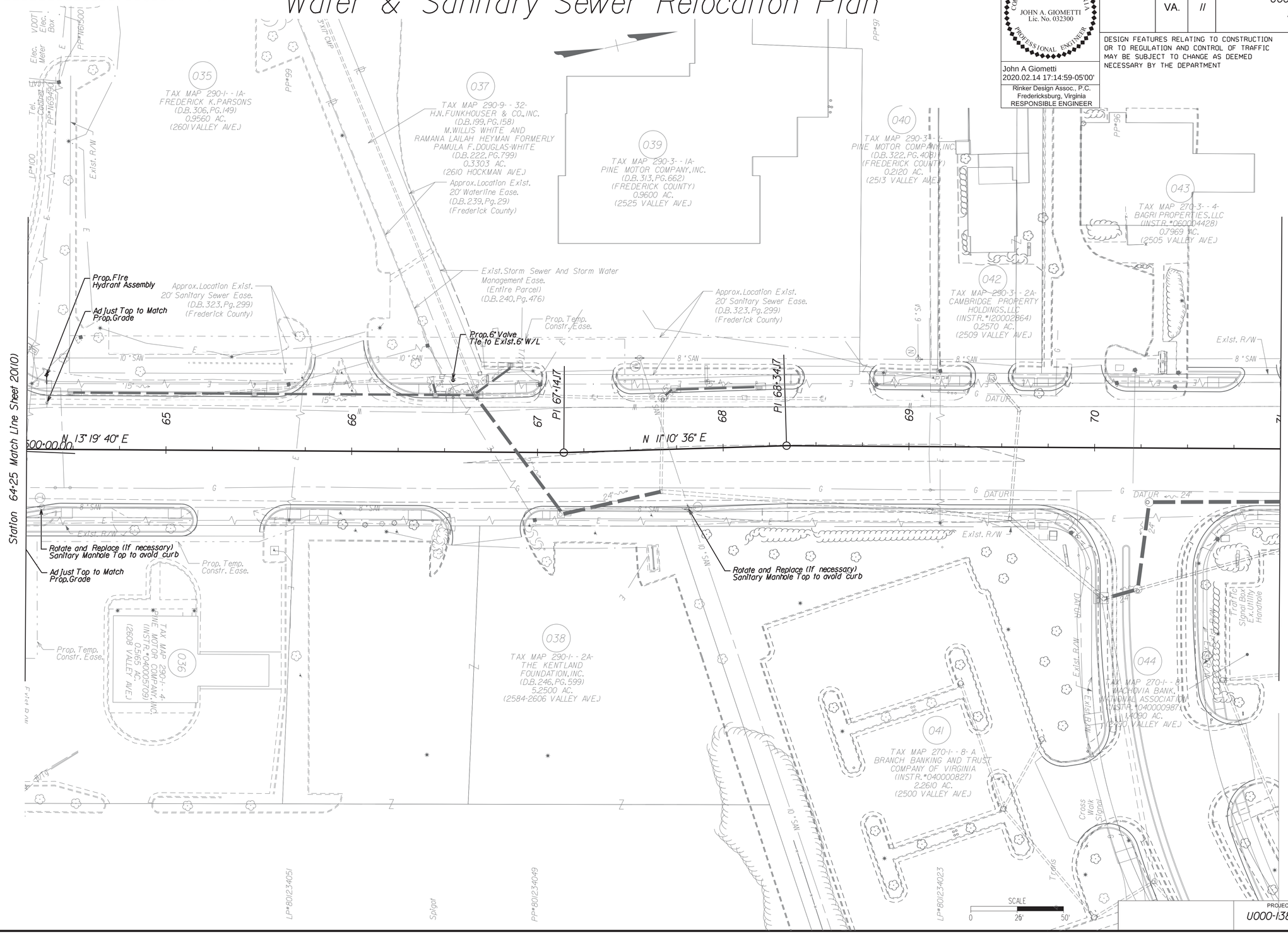

JOHN A. GIOMETTI
Lic. No. 032300
COMMONWEALTH OF VIRGINIA
PROFESSIONAL ENGINEER

John A Giometti
2020.02.14 17:14:59-05'00'
Rinker Design Assoc., P.C.
Fredericksburg, Virginia
RESPONSIBLE ENGINEER

REVISED	STATE	ROUTE	PROJECT	SHEET NO.
	VA.	II	U000-138-R04 R201, C501	20(11)

DESIGN FEATURES RELATING TO CONSTRUCTION OR TO REGULATION AND CONTROL OF TRAFFIC MAY BE SUBJECT TO CHANGE AS DEEMED NECESSARY BY THE DEPARTMENT

PROJECT	SHEET NO.
U000-138-R04	20(11)

Rinker Design Associates, P.C.
Civil Engineering • Surveying • Land Planning
Transportation • Environmental
Right of Way Services
Office Locations
Northern Virginia: 4101 Dickerson Road, Suite 100, Winchester, VA 22601, Phone: (540) 662-4067, Fax: (540) 662-4068
Richmond: 2101 Maple Avenue, Suite 100, Richmond, VA 23220, Phone: (804) 355-2220, Fax: (804) 355-2221
Fredericksburg: 4101 Dickerson Road, Suite 100, Fredericksburg, VA 22407, Phone: (540) 373-7020, Fax: (540) 373-8693

2/14/2020
9:08:27 AM

d1030130201(12).dgn
Plotted By: mbeales

PROJECT MANAGER Perry Eisenach, P.E. - City of Winchester (540) 667-2085
SURVEYED BY, DATE Sidney Thomas, L.S. - Rinker Design Associates (703) 368-7373, October 2014
DESIGN BY John A. Giometti, P.E. - Rinker Design Associates (703) 334-0060
SUBSURFACE UTILITY BY, DATE Matthew Bansiem - Mid Atlantic Utility Locating (703) 378-0100, August 2014

Water & Sanitary Sewer Relocation Plan

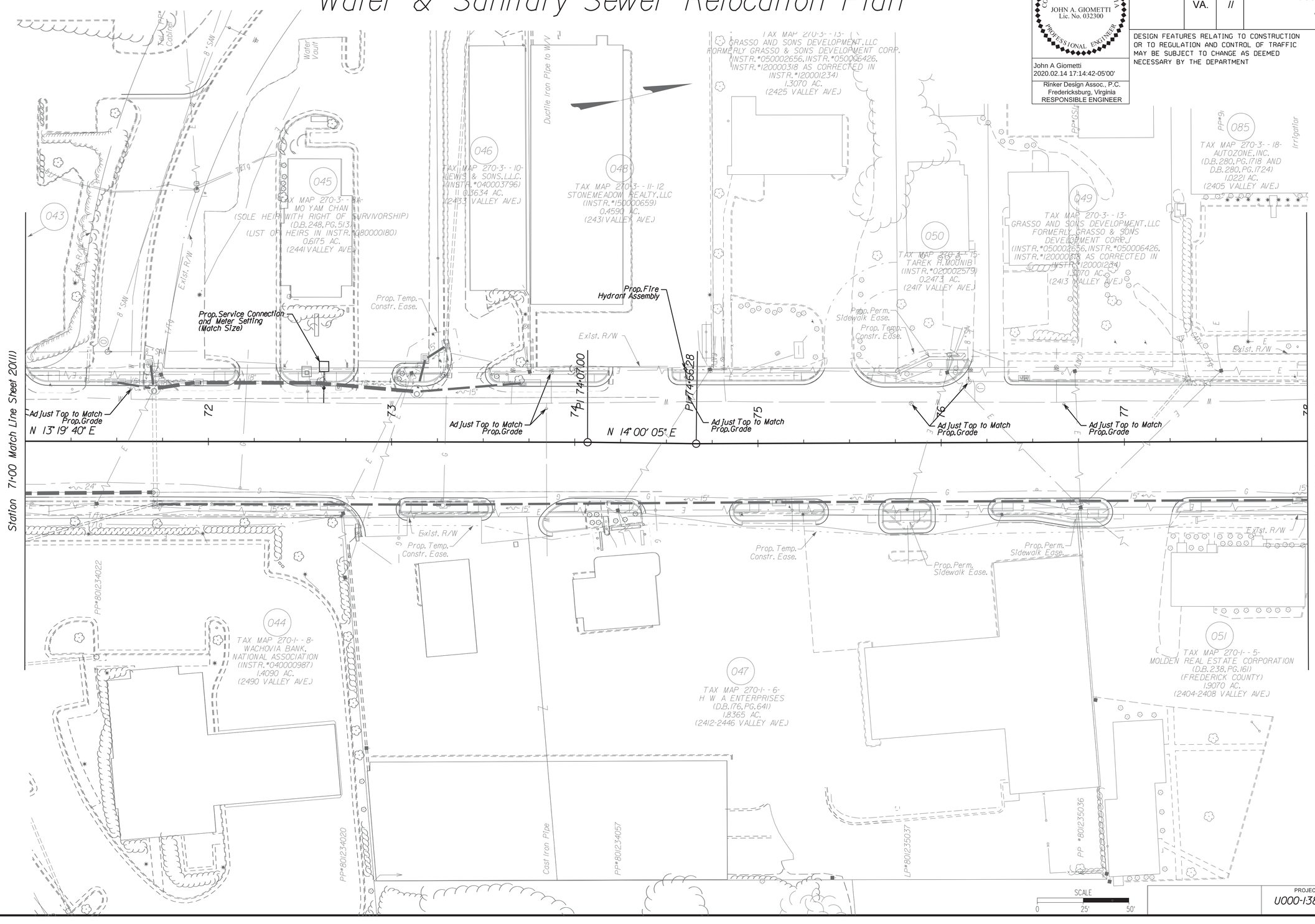

COMMONWEALTH OF VIRGINIA
JOHN A. GIOMETTI
Lic. No. 032300
PROFESSIONAL ENGINEER

John A Giometti
2020.02.14 17:14:42-05'00'

Rinker Design Assoc., P.C.
Fredericksburg, Virginia
RESPONSIBLE ENGINEER

REVISED	STATE	STATE ROUTE	STATE PROJECT	SHEET NO.
	VA.	11	U000-138-R04 R201, C501	20(12)

DESIGN FEATURES RELATING TO CONSTRUCTION OR TO REGULATION AND CONTROL OF TRAFFIC MAY BE SUBJECT TO CHANGE AS DEEMED NECESSARY BY THE DEPARTMENT

PROJECT	SHEET NO.
U000-138-R04	20(12)

Rinker Design Associates, P.C.
Civil Engineering • Surveying • Environmental
Transportation • Land Development • Right of Way Services
Office Locations
Fredericksburg, Va. 22401 — 2011 Mary Lynn Drive, Suite 100
Sterling, Va. 20164 — 21730 Sycolin Road, Suite 200
Manassas, Va. 20110 — 8321 Sudley Road, Suite 100
Fairfax, Va. 22030 — 3975 Fairfax Blvd., Suite 100
Fredericksburg, Va. 22407 — 2011 Mary Lynn Drive, Suite 100
Winchester, Va. 22601 — 1830 Tilson Drive, Suite 210
Fax: (540) 662-4185
Fax: (703) 368-7373
Fax: (703) 334-0060
Fax: (540) 665-0193
Fax: (540) 667-2085

PROJECT MANAGER Perry Eisenach, P.E. - City of Winchester (540) 667-2085
SURVEYED BY, DATE Sidney Thomas, L.S. - Rinker Design Associates (703) 368-7373, October 2014
DESIGN BY John A. Giometti, P.E. - Rinker Design Associates (703) 334-0060
SUBSURFACE UTILITY BY, DATE Matthew Bansiem - Mid Atlantic Utility Locating (703) 378-0100, August 2014

Water & Sanitary Sewer Relocation Plan

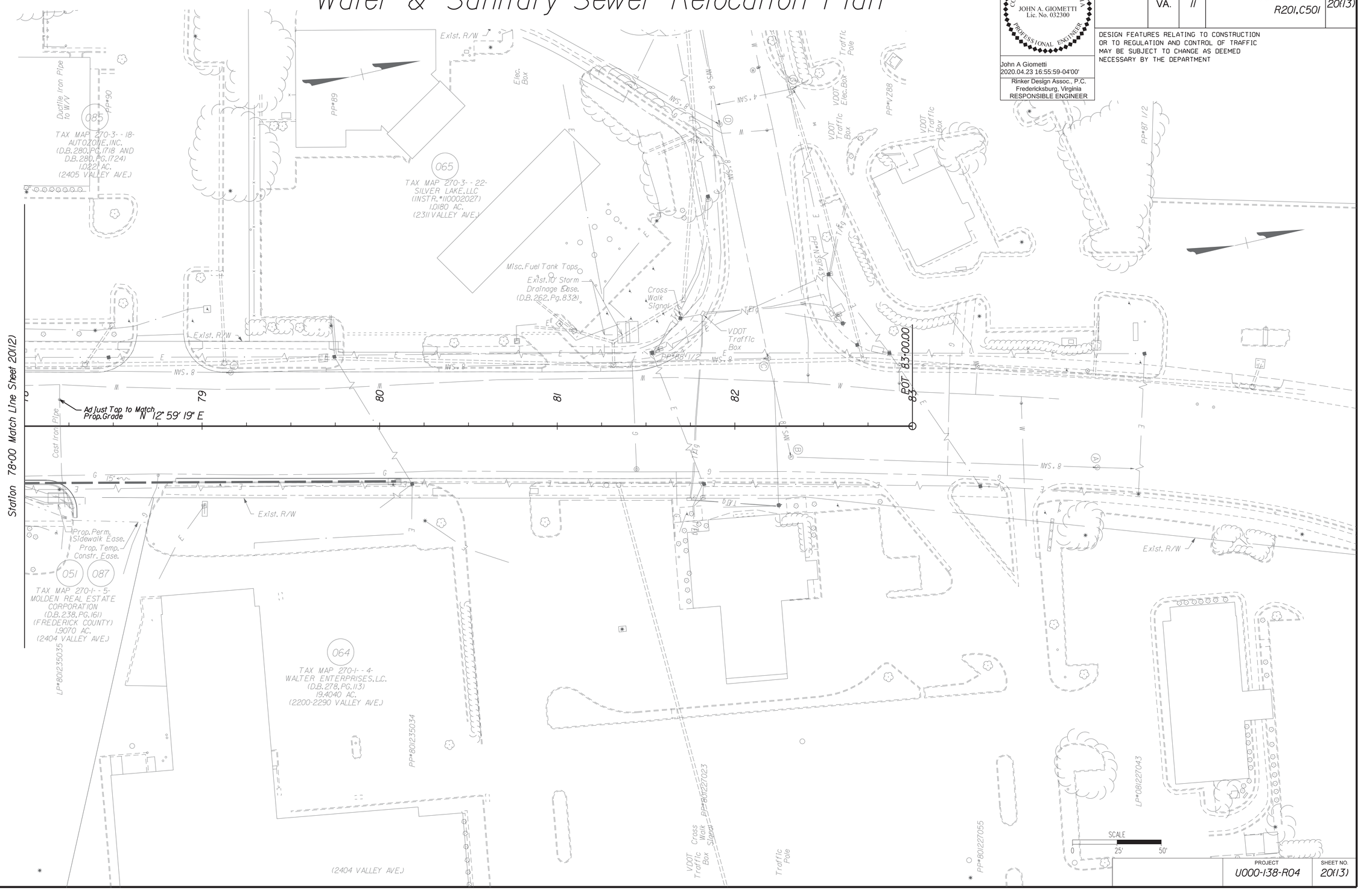

COMMONWEALTH OF VIRGINIA
JOHN A. GIOMETTI
Lic. No. 032300
PROFESSIONAL ENGINEER

John A Giometti
2020.04.23 16:55:59-04'00'

Rinker Design Assoc., P.C.
Fredericksburg, Virginia
RESPONSIBLE ENGINEER

REVISED	STATE	STATE ROUTE	STATE PROJECT	SHEET NO.
	VA.	11	U000-138-R04 R201, C501	20(13)

DESIGN FEATURES RELATING TO CONSTRUCTION OR TO REGULATION AND CONTROL OF TRAFFIC MAY BE SUBJECT TO CHANGE AS DEEMED NECESSARY BY THE DEPARTMENT

PROJECT	SHEET NO.
U000-138-R04	20(13)

Rinker Design Associates, P.C.
Civil Engineering • Surveying • Environmental
Transportation • Land Development • Right of Way Services
SHOTTON STREET, INC.

Office Locations
Corporate Headquarters
10211 Fredericksburg Road
Suite 100
Ashland, VA 23005
Phone: (804) 798-9131
Fax: (804) 798-9137

Northern Virginia
4661 Fairfax Drive
Suite 100
Arlington, VA 22203
Phone: (703) 334-0060
Fax: (703) 334-0061

Richmond
4117 Mayo Lane Drive
Suite 101
Chesterfield, VA 23237
Phone: (804) 378-7210
Fax: (804) 378-7211

2/14/2020
9:08:32 AM

d1030130201(4).dgn
Plotted By: mbeales

PROJECT MANAGER Perry Eisenach, P.E. - City of Winchester (540) 667-2085
SURVEYED BY, DATE Sidney Thomas, L.S. - Rinker Design Associates (703) 368-7373, October 2014
DESIGN BY John A. Giometti, P.E. - Rinker Design Associates (703) 334-0060
SUBSURFACE UTILITY BY, DATE Matthew Bansiem - Mid Atlantic Utility Locating (703) 378-0100, August 2014

Water & Sanitary Sewer Relocation Plan

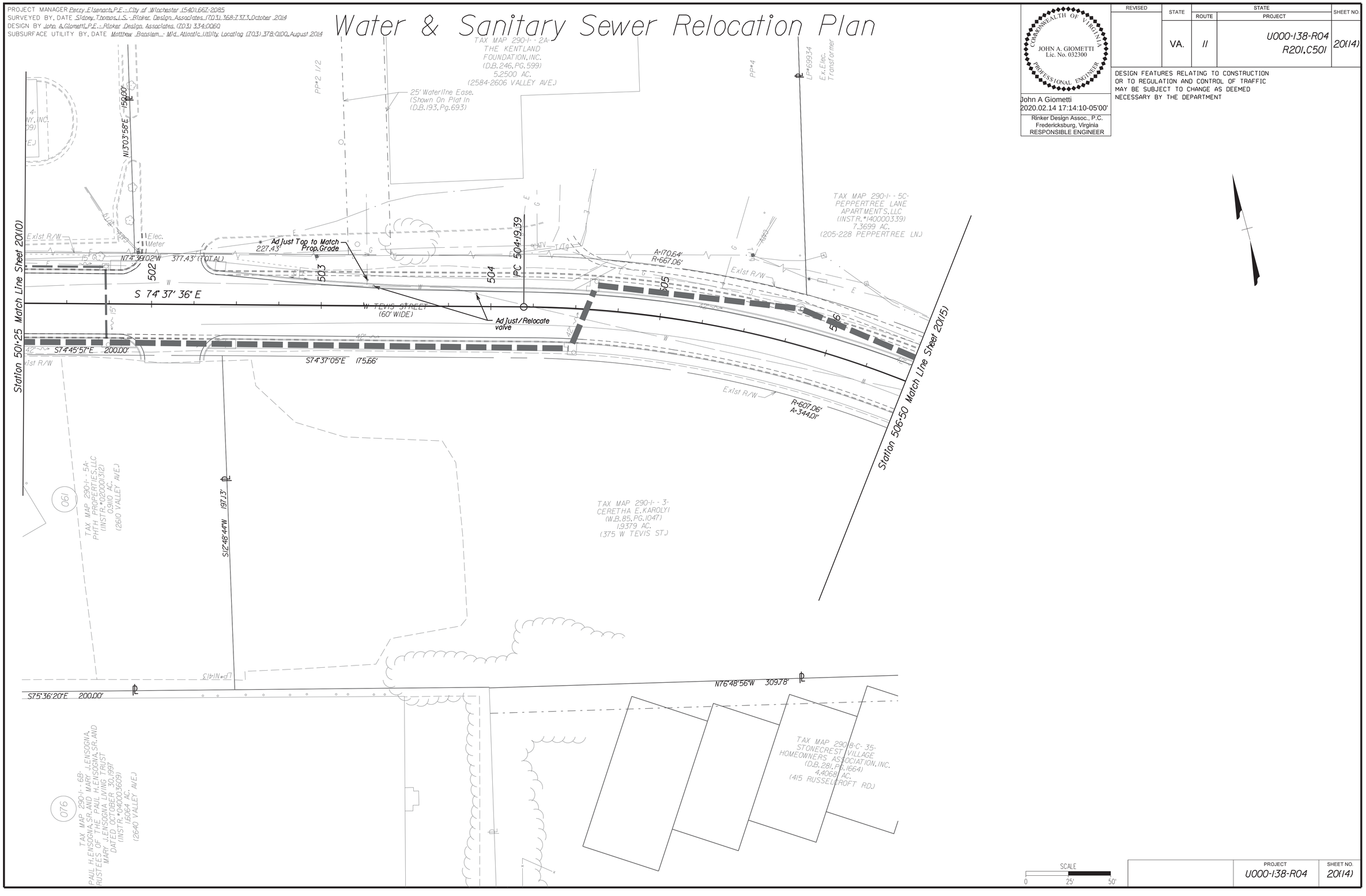

COMMONWEALTH OF VIRGINIA
JOHN A. GIOMETTI
Lic. No. 032300
PROFESSIONAL ENGINEER

John A Giometti
2020.02.14 17:14:10-05'00'

Rinker Design Assoc., P.C.
Fredericksburg, Virginia
RESPONSIBLE ENGINEER

REVISED	STATE	STATE ROUTE	STATE PROJECT	SHEET NO.
	VA.	II	U000-138-R04 R201, C501	20(14)

DESIGN FEATURES RELATING TO CONSTRUCTION OR TO REGULATION AND CONTROL OF TRAFFIC MAY BE SUBJECT TO CHANGE AS DEEMED NECESSARY BY THE DEPARTMENT

PROJECT	SHEET NO.
U000-138-R04	20(14)

Office Locations
Rinker Design Associates, P.C.
Civil Engineering • Surveying • Land Planning
Environmental • Transportation
Right of Way Services
SERVING THE MID-ATLANTIC REGION
Corporate Headquarters
4670 Corporate Drive
Suite 100
Fredericksburg, VA 22408
Phone: (540) 373-8020
Fax: (540) 373-0549
4670 Corporate Drive
Suite 100
Fredericksburg, VA 22408
Phone: (540) 373-8020
Fax: (540) 373-0549
4101 Dickerson Boulevard
Suite 100
Winchester, VA 22602
Phone: (540) 665-9800
Fax: (540) 665-0486

2/14/2020
9:08:35 AM

d1030130201(15).dgn
Plotted By: mbeales

PROJECT MANAGER Perry Eisenach, P.E. - City of Winchester (540) 667-2085
SURVEYED BY, DATE Sidney Thomas, L.S. - Rinker Design Associates (703) 368-7373, October 2014
DESIGN BY John A. Giometti, P.E. - Rinker Design Associates (703) 334-0060
SUBSURFACE UTILITY BY, DATE Matthew Bansiem - Mid Atlantic Utility Locating (703) 378-0100, August 2014

Water & Sanitary Sewer Relocation Plan

Rinker Design Associates, P.C.
Civil Engineering - Surveying - Transportation
Transportation - Environmental
Right of Way Services

Office Locations
Corporate Headquarters: 10432 Balls Ford Road, Suite 300, Manassas, VA 20109, Phone: (703) 334-0060, Fax: (703) 335-0369
207 Mason Street, Suite 100, Fredericksburg, VA 22401, Phone: (540) 373-4650, Fax: (540) 373-4651
4101 Dominion Boulevard, Suite 100, Glen Allen, VA 23060, Phone: (804) 346-8860, Fax: (804) 346-8861
107 Village Drive, Front Royal, VA 22630, Phone: (540) 635-7110, Fax: (540) 635-7111

JOHN A. GIOMETTI
Lic. No. 032300
COMMONWEALTH OF VIRGINIA
PROFESSIONAL ENGINEER

John A Giometti
2020.02.14 17:13:51-05'00'

Rinker Design Assoc., P.C.
Fredericksburg, Virginia
RESPONSIBLE ENGINEER

REVISED	STATE	STATE ROUTE	STATE PROJECT	SHEET NO.
	VA.	11	U000-138-R04 R201,C501	20(15)

DESIGN FEATURES RELATING TO CONSTRUCTION OR TO REGULATION AND CONTROL OF TRAFFIC MAY BE SUBJECT TO CHANGE AS DEEMED NECESSARY BY THE DEPARTMENT

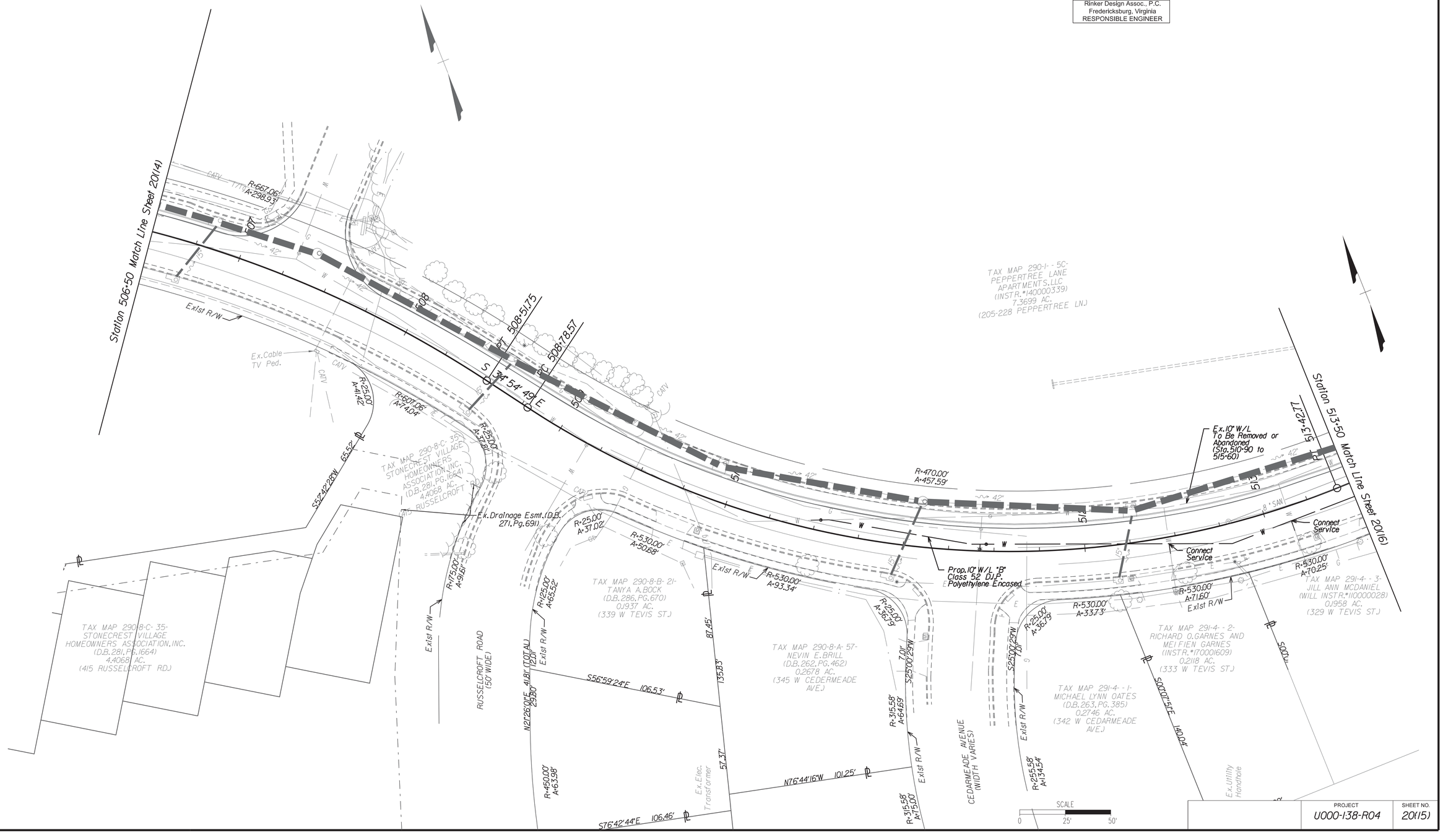

PROJECT	SHEET NO.
U000-138-R04	20(15)

2/14/2020
9:08:38 AM

d1030130201(16).dgn
Plotted By: mbeales

PROJECT MANAGER Perry Eisenach, P.E. - City of Winchester (540) 667-2085
SURVEYED BY, DATE Sidney Thomas, L.S. - Rinker Design Associates (703) 368-7373, October 2014
DESIGN BY John A. Giometti, P.E. - Rinker Design Associates (703) 334-0060
SUBSURFACE UTILITY BY, DATE Matthew Bansiem - Mid Atlantic Utility Locating (703) 378-0100, August 2014

Water & Sanitary Sewer Relocation Plan

COMMONWEALTH OF VIRGINIA
JOHN A. GIOMETTI
Lic. No. 032300
PROFESSIONAL ENGINEER

John A Giometti
2020.02.14 17:13:32-05'00'

Rinker Design Assoc., P.C.
Fredericksburg, Virginia
RESPONSIBLE ENGINEER

REVISED	STATE	STATE ROUTE	STATE PROJECT	SHEET NO.
	VA.	11	U000-138-R04 R201,C501	20(16)

DESIGN FEATURES RELATING TO CONSTRUCTION OR TO REGULATION AND CONTROL OF TRAFFIC MAY BE SUBJECT TO CHANGE AS DEEMED NECESSARY BY THE DEPARTMENT

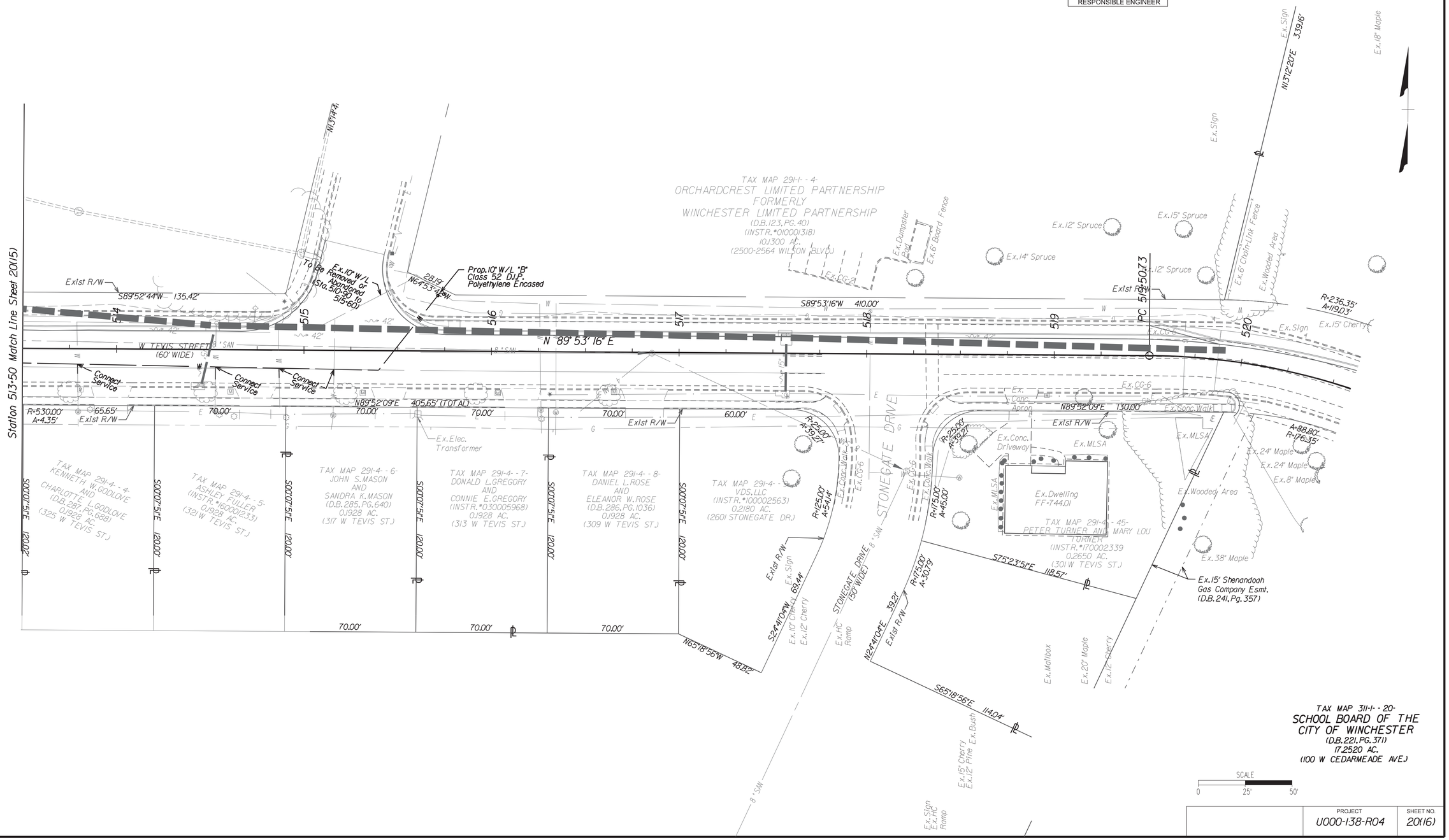

PROJECT	SHEET NO.
U000-138-R04	20(16)

Rinker Design Associates, P.C.
Civil Engineering • Surveying • Land Planning
Transportation • Environmental
Right of Way Services
Office Locations
Corporate Headquarters: 401 Lafayette Street, Suite 100, Fredericksburg, VA 22401, Phone: (540) 373-1400, Fax: (540) 373-0327
Northern Virginia Office: 4121 Wilson Boulevard, Suite 101, Arlington, VA 22203, Phone: (703) 334-0060, Fax: (703) 522-0225
Shenandoah Valley Office: 107 Chesapeake Drive, Suite 100, Winchester, VA 22601, Phone: (540) 667-2085, Fax: (540) 667-2086

2/14/2020
9:08:41 AM

d10301302017).dgn
Plotted By: mbeales

PROJECT MANAGER Perry Eisenach, P.E. - City of Winchester (540) 667-2085
SURVEYED BY, DATE Sidney Thomas, L.S. - Rinker Design Associates (703) 368-7373, October 2014
DESIGN BY John A. Giometti, P.E. - Rinker Design Associates (703) 334-0060
SUBSURFACE UTILITY BY, DATE Matthew Ransom - Mid Atlantic Utility Locating (703) 378-0100, August 2014

Office Locations
Corporate Headquarters: 207 Holiday Court, Suite 318, Annapolis, MD 21401, Phone: (410) 573-0150
Northern Virginia: 4309 Chain Bridge Road, Fairfax, VA 22030, Phone: (703) 352-0060, Fax: (703) 352-0065
Southern Virginia: 2000 Tyler Avenue, Suite 100, Richmond, VA 23227, Phone: (804) 262-0000, Fax: (804) 262-0001
Rinker Design Associates, P.C.
Civil Engineering • Surveying • Environmental
Transportation • Environmental • Right of Way Services

Waterline Profiles

Elevations are based on NAVD 1988 Datum

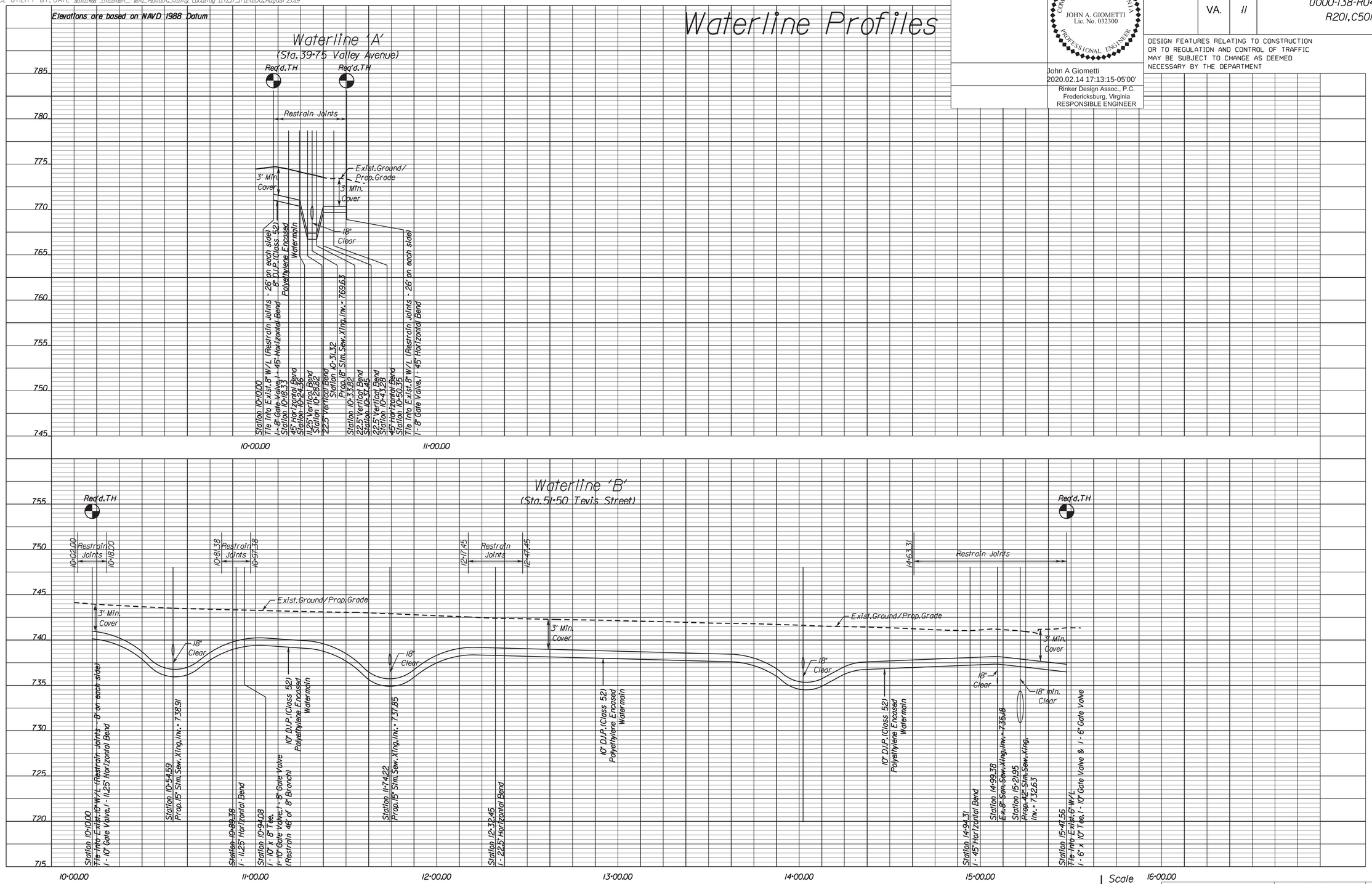

COMMONWEALTH OF VIRGINIA
JOHN A. GIOMETTI
Lic. No. 032300
PROFESSIONAL ENGINEER

John A Giometti
2020.02.14 17:13:15-05'00'
Rinker Design Assoc., P.C.
Fredericksburg, Virginia
RESPONSIBLE ENGINEER

REVISED	STATE	ROUTE	PROJECT	SHEET NO.
	VA.	11	U000-138-R04 R201, C501	20(17)

DESIGN FEATURES RELATING TO CONSTRUCTION OR TO REGULATION AND CONTROL OF TRAFFIC MAY BE SUBJECT TO CHANGE AS DEEMED NECESSARY BY THE DEPARTMENT

PROJECT	SHEET NO.
U000-138-R04	20(17)