APPENDIX A

[THIS PAGE INTENTIONALLY LEFT BLANK]

Enviro-Care

A WAMGROUP® Company

Revision: -

Project No.: WEC218286Z

Project Name: Opequon WRF

One (1) SAVI Beast HSOW/FOG Receiving Station

VFA-1200-DM

Submittal

1570 St. Paul Avenue - Gurnee IL 60031
P: 815.636.8306 - www.enviro-care.com

For:
Opequon WRF
Winchester, VA

Equipment:
One (1) SAVI Beast HSOW/FOG Receiving Station
VFA-1200-DM

Owner:
Opequon Water Reclamation Facility
3100 Berryville Pike
Winchester, VA 22603
Contact: Corey Crabil – Facility Manager
Phone: (540) 665-9867
Email: corey.crabill@winchesterva.gov

Manufacturer:
Enviro-Care
1570 St. Paul Ave
Gurnee IL 60031
Phone: (815) 636-8306
Fax: (847) 672-7968

Enviro-Care Contact:
Project Manager: Jeff Watry
Phone: (224) 302-0306
Email: jwatry@enviro-care.com

Enviro-Care Project Number: WEC218286Z
August 2019

TABLE OF CONTENTS

SECTION ONE: SUBMITTAL INTRODUCTION
Submittal Introduction
Warranty
ISO 9001 Certificate
SECTION TWO: SCOPE OF SUPPLY
Scope of Supply
SECTION THREE: LETTER OF CLARIFICATION
Letter of Clarification
SECTION FOUR: ACCESSORY EQUIPMENT
Gear Reducer - Drum
Motor – Drum
Gear Reducer – Auger
Motor - Auger
Motor Cutout Switch
Level Sensor
Motorized Ball Valves
Solenoid Valves
Water Hammer Eliminator
Water Strainer
Pressure Gauge
Positive Displacment Pumps
Anchor Bolts
Control Panel Components
SECTION FIVE: ENCLOSURES
WEC218286Z - Beast Parts List
WEC218286Z General Arrangement Drawing
Control Panel Submittal Comments
WEC218286Z – CP01 Control Panel Parts List
WEC218286Z - CP01 Control Panel Drawing
WEC218286Z – CP02 Control Panel Parts List
WEC218286Z - CP02 Booster Pump Control Station Control Panel Drawing

This page left intentionally blank

Section One: Submittal Introduction

This page left intentionally blank

Submittal Introduction

PROPRIETARY AND CONFIDENTIAL

The information contained in this entire document is the sole property of Enviro-Care Company. Circulation, distribution or reproduction of this document in whole or in part without the written permission of Enviro-Care Company, is prohibited by law. Enviro-Care Company reserves the right to alter data or the design of its equipment at any time without prior notice and without any obligation whatsoever.

This submittal is being furnished for the approval of the mechanical and electrical equipment (if applicable) as outlined under the specification section and drawings referred to in the Letter of Clarification.

Scope of Supply: A complete outline of materials to be supplied is listed herein. This submittal package represents Enviro-Care's complete scope of supply. All other materials and services not specifically included on the drawings or within the body of this submittal are to be supplied by others.

Operation and Maintenance Manuals: Operation and Maintenance Manuals shall follow in a timely manner and with content to satisfy the specifications. Operation and Maintenance Manuals will be supplied with the equipment. The manuals will include, but are not limited to, the following information:

- Parts List for each type of equipment being provided.
- Recommended receiving and storage instructions.
- Recommended installation instructions.
- Pre-startup instructions.
- Operation and maintenance instructions.
- Recommended spare parts list.
- Trouble-shooting guides.
- Accessory equipment information.
- General Arrangement drawing and control panel drawing (if control panel provided).

Critical Dimensions: Dimensions which are critical to the design of the equipment, but were not clear and/or not provided in the specifications or Engineer's drawings, may appear on Enviro-Care drawing in this submittal package with a cloud around them. **Approval to proceed will not be recognized by Enviro-Care, and production will remain on hold, until all clouded dimensions (if applicable) are confirmed or supplied in writing by the Contractor/ Engineer**. Please note that the Enviro-Care submittal drawings contain dimensions with ✱'s denoted to identify variance from contract documents and should be particularly noted.

Re-submittals: The complete submittal will be sent if any changes are required.

This page left intentionally blank

Enviro-Care Company
One-Year Warranty

Warranty Statement and Term:

Enviro-Care Company, Inc. warrants the supplied equipment to the original end user against defects in workmanship or material under normal use and service in compliance with the original design specifications and the maintenance requirements and instructions as found in the Operations & Maintenance Manual.

All Enviro-Care supplied equipment is warranted for twelve (12) months from date of start-up or eighteen (18) months from date of shipment, whichever occurs first.

Warranty Exclusions:

This warranty does not cover costs for labor, standard and/or scheduled maintenance performed, nor does it cover consumables and Enviro-Care parts that, by virtue of their operation, require replacement through normal wear (aka: Wear Parts), unless a defect in material or workmanship can be determined by Enviro-Care.

Wear parts are defined as brushes, rollers, spray nozzles, drum seals and other items specifically identified in the Operations & Maintenance Manual.

Warranty Coverage:

Enviro-Care's liability is limited to the supply or repair of defective parts returned, freight prepaid by buyer to a location specified by Enviro-Care. Repaired or replacement parts will be shipped to buyer prepaid via standard ground freight. Express or expedited shipments will be at the expense of the buyer.

Exclusions and Exceptions:

This Warranty excludes damage or wear to equipment caused by misapplication of product, improper maintenance, accident, abuse, unauthorized alteration or repair, Acts of God, or installation or operation that is non-compliant with Enviro-Care installation and operations instructions.

Enviro-Care shall not under any circumstances be liable for any incidental or consequential damages arising from loss, damage to property, personal injury or other damage or losses owing to the failure of Enviro-Care's equipment. The liability of Enviro-Care Company, Inc. is limited as set forth above within the time period set forth above.

Enviro-Care
1570 St. Paul Ave
Gurnee, IL 60031
P: 815.636.8306 F:815.636.8302
Web: www.enviro-care.com
Email: service@enviro-care.com

This page left intentionally blank

PERRY JOHNSON REGISTRARS, INC.

Attestato di Certificazione

Perry Johnson Registrars, Inc., ha valutato
il Sistema di Gestione Ambientale di

Savi S.r.l.

Sede Operativa Via Roma, 80 Roncoferraro (MN) 46037 Italia
Sede Legale Strada degli Schiocchi, 112 Modena (MO) 41124 Italia
e cantieri operativi

(In seguito denominata Organizzazione) e dichiara che
L'Organizzazione è conforme a

ISO 14001:2015

Questa certificazione è relativa al seguente scopo

Fabbricazione, Installazione e Assistenza di Macchine ed Accessori per Impianti per il Trattamento delle Acque.
IAF 18 - 28

La suddetta Organizzazione si impegna al rispetto delle regole a fronte delle quali è stata rilasciata la certificazione di cui al presente attestato.

Terry Boboige, Presidente

Perry Johnson Registrars, Inc. (PJR)
755 West Big Beaver Road, Suite 1340
Troy, Michigan 48084
(248) 358-3388

PERRY JOHNSON REGISTRARS, INC.

UKAS MANAGEMENT SYSTEMS 0105

Per informazioni puntuali e aggiornate circa eventuali variazioni intervenute nello stato della certificazione di cui al presente certificato, si prega di contattare il n. telefonico 0823/354874 o l'indirizzo e-mail italy@pjr.com.

L'uso del logo UKAS si riferisce alle attività di cui al Certificato di Accreditamento N. 0105

La validità del presente certificato dipende dall'esito positivo degli audit periodici di sorveglianza

Data di Prima Emissione:	Data di Emissione Corrente:	Data di Scadenza:	Certificato N°
24 aprile 2018	24 aprile 2018	23 aprile 2021	C2018-01500

This page left intentionally blank

Section Two: Scope of Supply

This page left intentionally blank

Scope of Supply

SECTION: N/A
ADDENDA: N/A

See General Arrangement drawing WEC218286Z for Process Design Information

ITEM: "A" – One (1) SAVI Beast HSOW/FOG Receiving Stations, Model VFA-1200-DM to include:

- Fully automatic, self-cleaning, dual drive, HSOW/FOG receiving system incorporating a perforated plate rotating drum screen and an integral screenings washing, conveying and dewatering/compacting contained within a tank from type 304 stainless steel.
- The septage receiving unit shall be a dual drive system which allows the drum and screw to be driven independently.
- A cylindrical drum screen shall be constructed of wedgewire section to the compaction zone in type 304 stainless steel.
- The drum screen shall be mounted on the drive end using a large diameter, single row, heavy duty industrial slewing ring bearing assembly with integral ring gear comprising part of the screen drive system.
- Drum gear reducer drive unit with 2.0 HP TEFC motor suitable for 460/3/60 electrical supply.
- The tank mounted rotating drum screen, conveying and dewatering system shall be positioned at a 25° angle of inclination from horizontal and includes a pivoting assembly to allow the drum to be rotated out of the tank for maintenance.
- A cleaning brush, cold water and hot water spray bars shall be located on the outside of the screen drum to prevent small solids from passing through the screen.
- Angled lifting vanes shall be positioned inside the drum screen to retain and lift solids into the screw trough.
- The screw trough shall extend beyond the drum screen opening at the influent end to maximize solids capture and reduce screenings recycle.
- The drive assembly for the screw shall be attached via a drive support flange welded to the upper end of the screenings transport tube.
- Screw drive unit with 2.0 HP TEFC motor suitable for 460/3/60 electrical supply.
- The shafted screenings screw conveyor to be constructed from high strength alloy steel with a two-part epoxy coating.
- Compaction zone integral to the screw conveyor and with latched, hinged cover from type 304 stainless steel and safety interlock switch.
- Dewatering zone drain flush spray system from type 304 stainless steel with manual ball valve.
- Transport tube spray system from type 304 stainless steel and rubber hose with manual ball valves.
- Water hammer eliminator.
- The HSOW/FOG receiving unit shall be supplied with a two-stage tank. The inlet section of the tank shall slope toward the screen to prevent sedimentation. The second stage of the tank shall house the rotating drum screen.
- Extended discharge on each inlet.
- Tank flush wash system from type 304 stainless steel with manual ball valve.
- All covers will be gasketed and either hinged, bolted or latched.
- Two (2) Borger Rotary Lobe Pumps rated for 350 gpm of HSOW with 15% TSS content. Motor– 10 HP – 460/3/60; Inlet / Outlet flanges 6-inch, Helical Gear Reducer; Galvanized Steel Frame; Flexible Coupling & Guard, pump volute temperature sensor.

- Provide gray PVC piping with pressure sensors as noted by Enviro-Care on attached drawing WEC218286.

HARDWARE

- Assembly fasteners from type 304 stainless steel.
- Anchor rods from type 304 stainless steel.

CONTROL PANEL AND INSTRUMENTATION

- One (1) NEMA 4X type 304 stainless steel wall mount main control panel suitable for 480/3/60 electrical supply.
- One (1) NEMA 4X type 304 stainless steel wall mount main control panel suitable for 480/3/60 electrical supply. See Control Panel Drawings and BOM for details – Same design as original unit panel.
- Two (2) NEMA 4X 304 stainless steel Remote Indication Stations complete with – One similar to current Station, Pump Connection Point has a pump on/off switch – see drawings
- One (1) NEMA 4X Safety Microswitch: 120 volt safety interlock switch shall be factory mounted to the compaction/discharge zone access door. Interlock switch shall prevent operation of the screen while the door is open.
- Two (2) NEMA 4X brass body solenoid valves, 120 volt, single phase, 60 Hz, to control flow to the dewatering zone spray wash assembly and hot water spray bar.
- Two (2) NEMA 4X full port stainless steel electric actuated ball valves to control flow to the drum spray wash and tank flush assemblies. Ball valve electric actuator shall be NEMA 4X 120 volt, single phase, 60 Hz.
- One (1) NEMA 4X inlet 6-inch plug valve with electric actuator. Plug valve full port, cast iron body, flanged ends, BUNA packing/plug facing. Auma electric actuator – Open/Close service, 120volt. With manual override handwheel and hand switches for Open/Close, Local-off-Remote, running lights, LED readout screen (for FOG influent control).
- One (1) level probe to detect start, mid level, and high level, with mounting bracket

SPARE PARTS (TOTAL)

- One (1) Borger Rotary Lobe Pump rated for 350 gpm of HSOW with 15% TSS content. Motor– 10 HP – 460/3/60; Inlet / Outlet flanges 6-inch, Helical Gear Reducer; Galvanized Steel Frame; Flexible Coupling & Guard, pump volute temperature sensor.

FIELD SERVICE (TOTAL)

- To be billed as T&M. Daily rate $1,250.00 per day plus expenses. Air flight estimated to be $600.

Section Three: Letter of Clarification

This page left intentionally blank

Letter of Clarification

The given specification is for standard Enviro-Care equipment; minimal clarification needed, as follows:

General:

1. Please see Section Five Enclosures for Control Panel submittal comments.
2. Control Panel and system is to take signals from SCADA as does the present installation. Login with Waste types 1 (Std) and type 2 (FOG) will open the inlet valve as per the current installation. Waste Type 3 (DAF) would allow the pump to be turned on and will keep the inlet valve closed. This turn the pump on once connected would be similar to operation of the pilot performed on site last year. If other combinations are needed (i.e. – a FOG hauler who is very thick and wants to pump versus gravity) please let us know.
3. Opequon's current unit had a bagger added later, as an aftermarket purchase. I did not see a listing for the bagger. This can be added later as per the previous unit.
4. Since no drawings of future building are available, we based this layout on present building layout. Discharge side pump and piping can be altered, to simplify layouts if possible, based on future building.
5. In order to prevent rust on 304SS, chloride content in process water and wash water must be < 200 mg/L, and hydrogen sulfide (H_2S) content must be < 6ppm.

This page left intentionally blank

Section Four: Accessory Equipment

Delete parts that do not apply, per project.

Gear Reducer - Drum

Motor – Drum

Gear Reducer – Auger

Motor - Auger

Motor Cutout Switch

Level Sensor

Motorized Ball Valves

Solenoid Valves

Water Hammer Eliminator

Water Strainer

Pressure Gauge

Positive Displacment Pumps

Anchor Bolts

Control Panel Components

This page intentionally left blank.

Enviro-Care
A WAMGROUP® Company

Gear Reducer - Drum

This page intentionally left blank

Right-angle Helical-bevel Reducers
Selection & Combinations

Selection

- SK 92072
- SK 92172
- SK 92372
- SK 92672
- SK 9012.1
- SK 9013.1
- SK 9016.1
- SK 9017.1
- SK 92772
- SK 9022.1
- SK 9023.1
- SK 9032.1
- SK 9033.1
- SK 9042.1
- SK 9043.1
- SK 9052.1
- SK 9053.1
- SK 9072.1
- SK 9072.1/32
- SK 9072.1/42
- SK 9082.1
- SK 9082.1/42
- SK 9082.1/52
- SK 9086.1
- SK 9086.1/52
- SK 9092.1
- SK 9092.1/52
- SK 9096.1
- SK 9096.1/62
- SK 9096.1/63

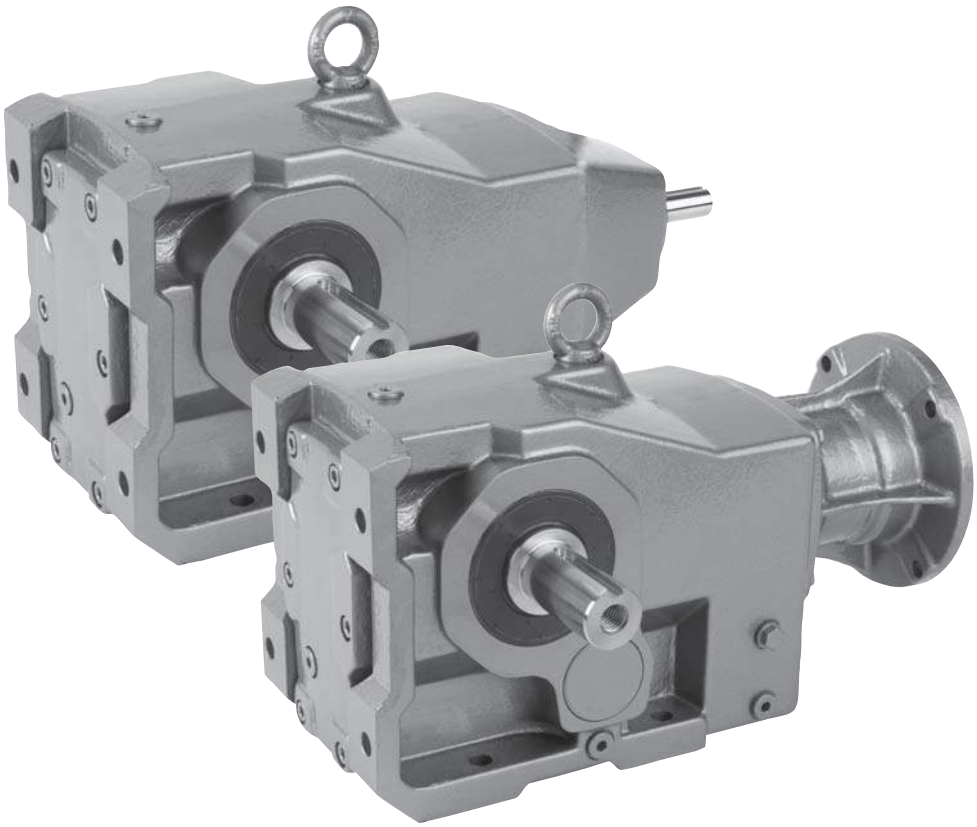

NORD DRIVESYSTEMS

www.nord.com

UNICASE™

Model Type	Gear Ratio i_{tot}	Output Speed n_2 1750 rpm [rpm]	Output Torque* $T_{2\,max}$ [lb-in]	Max Solid in 1750 rpm 11 [hp]
SK 92772	4.81	364	3629	7.50
	5.43	322	3761	7.50
	6.11	286	3717	7.50
	6.41	273	3983	7.50
	7.60	230	4204	7.50
	8.55	205	4381	7.50
	9.63	182	4381	7.50
	10.88	161	4558	7.50
	12.43	141	4558	7.50
	13.91	126	4735	7.50
	15.60	112	5177	7.50
	17.83	98	5177	7.50
	19.73	89	5310	7.50
	22.22	79	5487	6.88
	25.39	69	5753	6.30
	[illegible]	62	5310	[illegible]

Helical-Bevel Ordering Guide

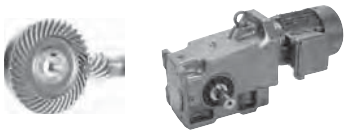

	Gear Unit	Shaft/Mounting	Reducer Options		Motor/Input	Motor Options
SK	❶ SK9016.1	❷ AF	❸	-	❹ N140TC	
					see page 690	see page 690

❶ **Gear Unit**

92072	9012.1	9013.1	9072.1/32
92172	9016.1	9017.1	9072.1/42
92372	9022.1	9023.1	9082.1/42
92672	9032.1	9033.1	9082.1/52
92772	9042.1	9043.1	9086.1/52
	9052.1	9053.1	9092.1/52
	9072.1		9096.1/62
	9082.1		
	9086.1		
	9092.1		
	9096.1		

❷ **Shaft/Mounting**

- Solid Shaft/Foot Mount	**VXZ -** Solid Shaft/Foot/B14 Flange	**AZ** - Hollow Shaft/B14 Flange
VZ - Solid Shaft/B14 Flange	**VXF -** Solid Shaft/Foot/B5 Flange	**AF** - Hollow Shaft/B5 Flange
VF - Solid Shaft/B5 Flange	**LXZ -** Double Solid Shaft/Foot/ B14 Flange	**AX** - Hollow Shaft/Foot Mount
LX - Double Solid Shaft/Foot		**AXZ -** Hollow Shaft/Footed/B14 Flange
		AXF - Hollow Shaft/Footed/B5 Flange

❸ **Reducer Options**

❒ **B -** Fixing Element Kit	❒ **VL -** Heavy Duty Output Bearings	❒ **VI -** Flouro-rubber Seals
❒ **H -** Hollow Shaft Cover	❒ **VL2 -** Spread Bearing Design	❒ **OSG -** Oil Sight Glass
❒ **H66 -** IP66 Hollow Shaft Cover	❒ **VL3 -** Oil Safe Spread Bearings	❒ **OA -** Oil Expansion Chamber
❒ **D -** Torque Arm	❒ **VL4 -** Drywell	❒ **OC -** Oil Cooler
❒ **K -** Bottom Mount Torque Arm	❒ **SM5 -** Stainless Steel Shaft	❒ **WC -** Water Cooling Cover
❒ **PR -** Flange Pilot Removal	❒ **SWA -** Special Hollow Shaft	❒ **LL -** Long Term Storage
❒ **SH -** Shrink Disc & Cover	❒ **SWV -** Special Solid Shaft	❒ **MDP -** Magnetic Drain Plug
❒ **VSH -** Heavy Duty Shrink Disc & Cover	❒ **R -** Backstop	❒ **ADP -** Additional Drain Plug

❹

Input Shaft	NEMA Adapter	IEC Adapter	Integral Motors		Integral Energy Efficent Motors		Scoop	Motor Platform	Servo Adapter (Keyed)
W	N56C	IEC 63	63S/4 - 0.16hp	160L/4 - 20hp	80LH/4 - 1hp	200LH/4 - 40hp	S56	MKN056	SEP 100
	N140TC	IEC 71	63L/4 - 0.25hp	180MX/4 - 25hp	90SH/4 - 1.5hp	225SH/4 - 50hp	S140T	MKN140	SEP 130
	N180TC	IEC 80	71S/4 - 0.33hp	180LX/4 - 30hp	90LH/4 - 2hp	2525MH/4 - 60hp	S180T	MKN180	SEP 165
	N210TC	IEC 90	71L/4 - 0.50hp	200L/4 - 40hp	100LH/4 - 3hp	250MH/4 - 75hp	S210T	MKN210	SEP 215
	N250TC	IEC 100	80S/4 - 0.75hp	225S/4 - 50hp	112MH/4 - 5hp	280SH/4 - 100hp	S250T	MKN250	SEP 300
	N280TC	IEC 112	80L/4 - 1hp	2525M/4 - 60hp	132SH/4 - 7.5hp	280MH/4 - 125hp	S280T	MKN280	**Servo Adapter (Clamp)**
	N320TC	IEC 132	90S/4 - 1.5hp	250M/4 - 75hp	132MH/4 - 10hp	315SH/4 - 150hp	S320T	MKN320	
	N360TC	IEC 160	90L/4 - 2hp	280S/4 - 100hp	160MH/4 - 15hp	315MH/4 - 175hp	S360T	MKN360	SEK 100
	N400TC	IEC 180	100L/4 - 3hp	280M/4 - 125hp	160LH/4 - 20hp	315MAH/4 - 200hp	S400T	MKN400	SEK 130
		IEC 200	100LA/4 - 5hp	315S/4 - 150hp	180MH/4 - 25hp	315LH/4 - 250hp			SEK 165
		IEC 225	112M/4 - 5.4hp	315M/4 - 175hp	180LH/4 - 30hp				SEK 215
		IEC 250	132S/4 - 7.5hp	315MA/4 - 200hp					SEK 300
		IEC 280	132M/4 - 10hp	315L/4 - 250hp					
		IEC 315	160M/4 - 15hp	Other Speeds Available		Other Speeds Available			

Product Specifications

Ratio

26.29 :1

see pages 398 - 446

— OR —

Output Speed

rpm

see pages 398 - 446

Mounting Position

- ❍ M1
- ❍ M2
- ❍ M3
- ❍ M4
- ❍ M5
- ❍ M6
- ❍ Special _____

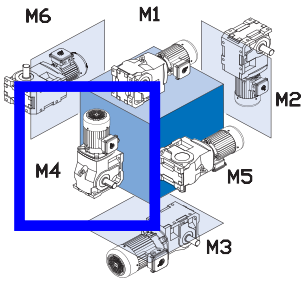

Paint

- ❍ Standard Stainless Steel Paint
- ❍ NSD+ (gray)
- ❍ NSD+W (white)
- ❍ NSD-X3 (gray)
- ❍ NSD-X3W (white)
- ❍ ~~Casting Primed~~
- ❍ Special BLUE

Lubricant

- ❍ Standard
- ❍ Synthetic
- ❍ Food Grade
- ❍ Other _____

Solid Shaft Side (if required)

- ❍ Shaft Side A
- ❍ Shaft Side B
- ❍ Shaft Side A&B

see page 18

Hollow Shaft Diameter (if required)

see pages 566 - 573

B5 Flange Side (if required)

- ❍ Flange Side A
- ❍ Flange Side B
- ❍ Flange Side A&B

see page 18

B5 Flange Diameter (if required)

Torque Arm Side & Location (if required)

- ❍ Side A
- ❍ Side B

Location

see page 18

Shrink Disc Side (if required)

- ❍ Side A
- ❍ Side B

see page 18

H66 Side (if required)

- ❍ H66 Side A
- ❍ H66 Side B

see page 18

Gearmotor Only Details

Voltage & Frequency

- ❍ 230/460V-60Hz (460V only ≥ 40 hp)
- ❍ 575V-60Hz
- ❍ 208V-60Hz
- ❍ 400V-50Hz
- ❍ 115/230V-60Hz, 1 ph.
- ❍ Other _____

Terminal Box Pos.

- ❍ TB1
- ❍ TB2
- ❍ TB3
- ❍ TB4

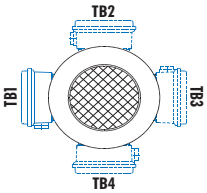

Mtg. Pos. M1 Shown

Conduit Entry Loc.

- ❍ CE I *
- ❍ CE II
- ❍ CE III *
- ❍ CE IV

* Brakemotor

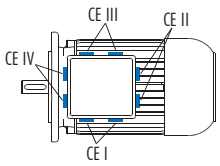

Mtg. Pos. M1 Shown

Selection Information

Gearbox Selection

A number of factors are considered when selecting a gear unit, including gearbox rating, service factor, speed and speed variation, horsepower, thermal capacity, ratio, physical size, ambient conditions and cost. Below are some guideline steps to help aid in the gear unit selection.

1. Determine the speed and/or gear ratio
2. Determine the required power or torque
3. Determine Service Factor
4. Select the basic gearbox type and input
5. Determine the required mounting position
6. Select options
7. Checks – overhung load, thrust load, NEMA motor weight, thermal considerations, and other application considerations

1. Speed and Gear Ratio

The first step in selecting a gear unit is determining the final output speed or speeds you need. This speed is normally described in revolutions per minute (rpm). This output speed or speeds is determined by the input speed to the gear unit divided by its gear ratio. Their relationship is described by the following formulas.

$$i \text{ (gear ratio)} = \frac{\text{Input speed [rpm]}}{\text{Output speed [rpm]}}$$

$$\text{Output speed [rpm]} = \frac{\text{Input speed [rpm]}}{i \text{ (gear ratio)}}$$

To specify a gear unit, you can identify either gear ratio needed or the output speed (rpm) if the input speed is known.

2. Power and Torque

The second step for selecting a gear unit is the required power or torque needed to power the load. Torque in this catalog is normally expressed in pound-inches [lb-in].

$$\text{Power [hp]} = \frac{\text{Torque [lb-in] x speed [rpm]}}{63025}$$

$$\text{Torque [lb-in]} = \frac{\text{Power [hp] x 63025}}{\text{speed [rpm]}}$$

For a proper selection you must ensure that the motor or other prime mover can produce enough torque or power and that the gear unit has adequate torque or power capacity. You must also consider if the power or torque is specified at the input or output of the gear unit. The Helical-worm gear units have lower efficiency than in-line or bevel gear units, therefore helical-worm products efficiency may need to be considered in the selection.

To specify a gear unit you can identify either torque or power.

3. Service Factor or Service Class

In addition to power or torque, service factor must also be considered. A service factor is essentially the ratio of extra capacity in a gear unit compared to the power or torque that is needed to run that application. The goal of selecting a gear unit with extra capacity (service factor) is to provide adequate service life in operation.

One reason to apply a larger service factor is if a unit operates more hours per day. If a unit runs 24 hours per day it should normally have a higher service factor than a unit that runs 8 hours per day if you expect the same calendar life.

A second reason for applying a larger service factor is to cope with a more difficult application. Even if it takes the same power and speed to operate a rock crusher as a fan, the rock crusher needs a stronger gearbox (higher service factor) to give the same calendar operating life as the gear unit powering the fan.

The real question is how to determine the proper service factor for a gear unit in an application. Following are four possible methods.

Customer or User Specification

Many customers will have their own service factor guidelines or specifications.

AGMA Service Factoring

American Gear Manufacturers Association (AGMA) publishes lists of recommended service factors for different applications. These service factor recommendations have been determined form the experience of many gear manufactures and are in AGMA standard 6010. See page 68 for additional detail.

AGMA Service Classes

American Gear Manufactures Association (AGMA) has another method for selecting gear units service factors. AGMA standard 6009 lists many applications by a service class (I, II, III) with class I being the simplest applications and class III being the hardest. These application service classes are associated with a range of service factors by the following table.

AGMA Service Class	Service Factor
I	1.00 to 1.39
II	1.40 to 1.99
III	2.00 and above

In the gearmotors selection table each unit is also classified by an AGMA service class. See page 64 for additional detail.

Selection Information

NORD Mass Acceleration Service Factoring

NORD often uses a calculation based system to properly assign a service factor. This system considers hours of operation per day, the severity of the application and the number of times the equipment is cycled. See page 62 for additional detail.

4. Gearbox Type & Input

NORD gear drives are available in a number of mechanical configurations including:

- Helical in-line
- Clincher™ shaft mount
- Right-angle helical-bevel
- Right-angle helical-worm

NORD's modular design allows for a number of different inputs to be added to NORD reducers including:

- Integral motor
- NEMA-C and IEC motor adapter
- Solid input shaft
- Servo motor adapter
- Sugar scoop mount
- Top motor mount platform
- NORDISC™ variable speed friction drives
- Titan™ variable speed belt boxes

5. Mounting Position

The gearbox mounting position is an important and often overlooked specification. The mounting position determines how much oil the gear reducer requires, in addition to determining the position of the oil drain, oil fill and vent on the gear drive. NORD offers six basic mounting positions. If your application requires a variation from the six basic mounting positions, please contact NORD.

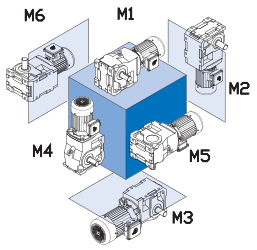

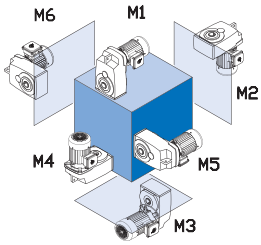

Many gearbox and motor options require a location designation. For example a right-angle helical-bevel unit with a single solid shaft extension requires a shaft extension side location. Please see page 18 for additional options that require location designation.

6. Options

NORD offers a number of mechanical, protective, paint and lubrication options for gear reducers and motors. Please see pages 19 for gear unit options and refer to the motor section (Section G) for motor options.

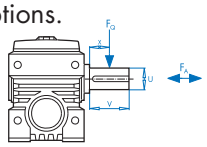

7. Checks

Overhung Load

An overhung or radial load exists when a force is applied at right-angles to a shaft beyond the shaft's outermost bearing. Pulleys, sheaves and sprockets will cause an overhung load when used as a power take-off. The amount of overhung load will vary, depending on the type of power take-off used and where it is located on the shaft.

Overhung load [FQ] can be found in the gearmotor rating tables and input shaft overhung load ratings [FQ1] can be found on pages 52 - 59. Overhung load capacities should not exceed the values in the table to ensure long bearing life. Overhung load capacities are to be applied at the midpoint of the shaft extension and without thrust loads.

To calculate overhung load see page 52.

Thrust Loads (Axial)

Loads that are directed towards or away from the gearbox along the axis of the shaft are called thrust or axial loads. Output shaft thrust capacity [FA] can be found in the gearmotor rating tables. Input shaft capacity [FA1] can be found on pages 52. Thrust load capacities should not exceed the values listed in the tables to ensure long bearing life. Thrust load capacities are listed for pure axial loads with no overhung load. Contact NORD for combination loads or a more exact examination of the application.

NEMA C-face Motor Weight Limits

When mounting a motor to a NORD NEMA C-face motor adapter it is important to consider the motor's weight. Following is a table that includes the maximum motor weight the NEMA adapter can support. If the motor exceeds the listed weight is must be externally supported. When a C-face mounted motor is externally supported care must be taken to ensure that the support system does not impose additional pre-loads on the NEMA motor adapter.

NEMA Weights

Motor FRAME	56C	143TC	145TC	182TC	184TC
Max Weight [lb]	66	88	110	130	175
Motor FRAME	210TC	250TC	280TC	324TC	326TC
Max Weight [lb]	220	450	550	770	1100
Motor FRAME	365TC				
Max Weight [lb]	1550				

Selection Information

Gear Reducer Ratings

The permissible continuous power limit of gear reducers is limited by both the mechanical rating and the thermal rating. The mechanical rating depends upon the material strength of the gear reducer's gears, bearings, housing, shafts, etc. The mechanical input power limit to the reducer is also a function of the mechanical power rating divided by the relevant reducer service factor.

The thermal rating or thermal limit depends upon the amount heat generated within the reducer and is influenced by a variety of factors including:

- Churning or splashing losses in the lubricant which depend upon reducer type, ratio, input style, mounting position or oil fill-level, and the circumferential travel velocities of the gear wheels.
- The actual speed and load conditions. These factors determine load-dependent losses in the gears and frictional losses in the gears, bearings and seal areas.
- Ambient Conditions:
  - Ambient Temperature.
  - Amount of free air circulation around the drive.
  - Possible near-by heat sources.
  - Heat dissipation or the ability of the reducer to transfer heat through the housing, shafts, and the mating substructure or mounting surface.

Observing the Reducer's Thermal Limit

When to Contact NORD

Through computer program analysis NORD can evaluate application conditions and the impact they have on a reducer's thermal capacity.

When applying helical in-line, Clincher™ shaft mount, and helical-bevel gear units of case sizes 6 and larger (SK62, SK6282 and SK9072.1 and larger), consult NORD if any two or more of the following conditions apply:

- Gear ratio, $i_{total} \leq 24:1$ or $\leq 48:1$ for helical-bevel units
- Input power, $P_1 \geq 60$ hp (45 kw)
- Input speed, $n_1 > 1800$
- Vertical positioning (mounting position M2 or M4)
- Input configuration: NEMA C-face, IEC, servo adapter or solid-shaft input (Type-W)
- Elevated ambient temperature ≥ 86° F (30 °C)

When applying helical-worm or worm gear units, please consult NORD if any one of the following conditions applies:

- Input speed, $n_1 > 1800$
- Vertical positioning (mounting position M2 or M4)
- Input configuration: NEMA C-face, IEC, servo adapter or solid-shaft input (Type-W)
- Elevated ambient temperature ≥ 86° F (30 °C)

Advise NORD of any special application considerations:

- Confined space or limited air circulation
- Exposure to other near-by radiant heat sources
- Dirty or dusty environments
- High altitude operation > 3,280 ft (1000 m) a.s.l.

Dangers of Reducer Overheating

The following problems may result when the reducer's thermal capacity or maximum oil sump temperatures are exceeded:

- Lubrication oxidation, breakdown and deterioration.
- A decrease in lubrication viscosity and film thickness.
- Loss of critical bearing and gear clearances required for proper lubrication.
- Increased contact pressures and increased operating temperatures in the critical load zones of the gearing and bearings.
- An increased possibility for metal-to-metal contact and premature component wear.
- A significant reduction in the lubricant's ability to prevent scuffing, pitting, and in extreme cases galling or welding.

Maximum Oil Sump Temperature Limit

To prevent reducer overheating, the reducer's maximum oil sump temperature limit must not be exceeded for prolonged periods of operation (up to 3 hours continuous operation, depending upon reducer size).

Oil Type	Maximum Oil Temperature Limit	
	NORD	AGMA 9005-D94
Mineral	80-85 °C (176-185 °F)	95 °C (203 °F)
Synthetic	105 °C (220 ° F)	107 ° C (225 ° F)

Measures to Expand the Application Range

There are a variety of measures that may be taken in order to protect against thermal overload and expand the application range of the gear reducer. Common examples include the following:

- Recommending a change in lubrication viscosity and/or a specific synthetic lubricant type.
- Applying high-temperature seals.
- Increasing air flow around the gear unit.
- Shielding or protecting the reducer from high heat sources.
- Considering an integral motor instead of the bolt-on input assembly covers. In many cases the motor fan will substantially increase air-flow around the gear unit.
- Add an Oil Expansion/Overflow Chamber (Option "OA") or an Oil Reservoir (Option "OT").
- Oil Cooler (Option "OC").
- Water Cooling Cover (Option "WC")

Helical-Bevel Flange Mount Positions & Oil Fill Quantities

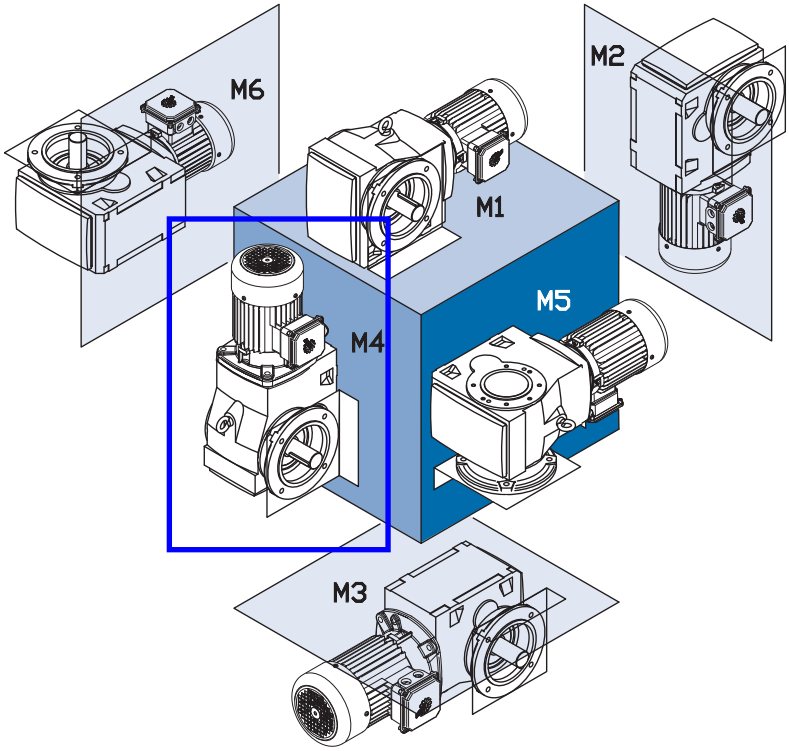

Mounting Position	M1		M2		M3		M4		M5		M6	
	Quarts	Liters	Quarts	Liters	Quarts	Liters	Quarts	Liters	Quarts	Liters	Quarts	Liters
SK92072	0.42	0.40	0.63	0.60	0.53	0.50	0.53	0.50	0.42	0.40	0.42	0.40
SK92172	0.53	0.50	0.97	0.92	0.92	0.87	1.11	1.05	0.79	0.75	0.69	0.65
SK92372	1.22	1.15	1.59	1.50	1.27	1.20	1.80	1.70	1.22	1.15	1.22	1.15
SK92672	1.64	1.55	2.96	2.80	2.64	2.50	3.49	3.30	2.54	2.40	2.54	2.40
SK92772	2.91	2.75	4.65	4.40	4.76	4.50	4.76	4.50	3.70	3.50	3.70	3.50
SK9012.1	0.74	0.70	2.01	1.90	2.01	1.90	2.54	2.40	1.27	1.20	1.80	1.70
SK9013.1	1.27	1.20	2.43	2.30	2.33	2.20	3.17	3.00	1.48	1.40	2.01	1.90
SK9016.1	0.74	0.70	2.01	1.90	2.01	1.90	2.54	2.40	1.27	1.20	1.80	1.70
SK9017.1	1.27	1.20	2.43	2.30	2.33	2.20	3.17	3.00	1.48	1.40	2.01	1.90
SK9022.1	1.37	1.30	2.75	2.60	3.70	3.50	4.44	4.20	2.11	2.00	2.96	2.80
SK9023.1	2.54	2.40	3.17	3.00	4.02	3.80	5.60	5.30	2.33	2.20	3.28	3.10
SK9032.1	2.01	1.90	5.50	5.20	6.76	6.40	7.72	7.30	3.49	3.30	5.39	5.10
SK9033.1	4.02	3.80	6.02	5.70	7.29	6.90	8.98	8.50	3.81	3.60	5.92	5.60
SK9042.1	3.81	3.60	10.30	9.70	12.0	11.4	12.2	11.5	6.87	6.50	8.67	8.20
SK9043.1	6.02	5.70	10.8	10.2	15.5	14.7	15.5	14.7	6.98	6.60	10.1	9.60
SK9052.1	7.93	7.50	17.4	16.5	21.1	20.0	23.8	22.5	12.2	11.5	19.0	18.0
SK9053.1	13.2	12.5	19.0	18.0	22.7	21.5	28.0	26.5	13.7	13.0	18.0	17.0
SK9072.1	12.7	12.0	29.1	27.5	34.9	33.0	40.7	38.5	20.1	19.0	27.5	26.0
SK9082.1	22.2	21.0	57.1	54.0	69.8	66.0	84.6	80.0	40.2	38.0	55.0	52.0
SK9086.1	38.1	36.0	82.4	78.0	96.2	91.0	107	101	56.0	53.0	80.3	76.0
SK9092.1	42.3	40.0	137	130	163	154	185	175	86.7	82.0	96.2	91.0
SK9096.1	74.0	70.0	198	187	204	193	272	257	119	113	165	156

Lubrication

Lubrication Types

Proper gearbox lubrication is essential in order to reduce friction, heat, and component wear. Lubricants reduce heat and wear by inserting a protective "fluid boundary" between mating parts and preventing direct metal to metal contact. Lubricants also help prevent corrosion and oxidation, minimize foam, improve heat transfer, optimize reducer efficiency, absorb shock loads and reduce noise.

Mounting position not only determines the proper fill-level but may also have some effect on final reducer assembly. If considering any mounting positions that are not shown as catalog-standard options, it is critical that the customer consult with NORD prior to ordering. Unless otherwise specified, NORD supplies most all gear units (*) factory-filled with the standard lubrication type and the appropriate amount of lubricating oil.

* Gear units SK10282, SK10382, SK11282, SK11382, SK12382, and SK9096.1 are supplied without oil.

Standard Oil Lubricants

Gear Unit Type	Ambient Temperature	Oil Type	ISO Viscosity	Manufacturer Brand / Type
Helical-Inline, Parallel-Shaft, & Helical-Bevel	-4 to 104 °F (-20 to 40 °C)	MIN-EP	VG 220	Shell / Omala 220 ♦
	-40 to 140 °F (-40 to 60 °C)	PAO	VG 220	Mobil SHC 630 ♦
	23 to 104 °F (-5 to 40 °C)	FG	VG 220	Shell / FM 220 ♦
Helical-Worm	-22 to 122 °F (-30 to 50 °C)	PAO	VG 680	Mobil SHC 636 ♦

Optional Oil Lubricants

Gear Unit Type	Ambient Temperature	Oil Type	ISO Viscosity	Manufacturer Brand / Type
Helical-Inline, Parallel-Shaft, & Helical-Bevel	-31 to 176 °F (-35 to 80 °C)	PAO	VG 460	Mobil SHC 634
	-40 to 77 °F (-40 to 25 °C)	PAO	VG 150	Mobil SHC 629
	-40 to 140 °F (-40 to 60 °C)	FG-PAO	VG 220	Shell / Cassida GL 220
Helical-Worm	-40 to 122 °F (-40 to 50 °C)	FG-PAO	VG 460	Shell / Cassida GL 460

Standard Bearing Grease Lubricants

Grease Type / Thickener	Ambient Temperature	NLGI Grade	Manufacturer Brand / Type
Standard (Li-Complex)	-22 to 140 °F (-30 to 60 °C)	NLGI 2	Shell Albida EP LC2 ♦
High Temp (Polyurea)	-13 to 176 °F (-25 to 80 °C)	NLGI 2	Mobil Polyrex EP 2 ♦
Food-Grade (Al-Complex)	-13 to 104 °F (-25 to 40 °C)	NLGI 2	Mobil Grease FM 222 ♦

♦ Stocked Lubricant

Oil Formulation Codes

MIN-EP	Mineral Oil with EP Additive
PAO	Synthetic Polyalphaolefin Oil
PG	Synthetic Polyglycol Oil
FG	Food-Grade Oil
FG-PAO	Food-Grade, Synthetic Polyalphaolefin Oil

Important Notes

- In worm gears avoid using (EP) gear oils that contain sulfur-phosphorous chemistries, as these additives can react adversely with bronze worm gears and accelerate wear.
- Food grade lubricants must be in compliance with FDA 212 CFR 178.3570 and qualify as a NSF-H1 lubricant. Please consult with lubrication manufacture for more information.
- When making a lubrication change, check with the lubrication supplier to assure compatibility and to obtain recommended cleaning or flushing procedures.
- Do not mix different oils with different additive packages or different base oil formulation types. Polyglycol (PG) oils are not miscible with other oil types and should never be mixed with mineral oil, or Polyalphaolefin (PAO) oil.
- Please Consult NORD if considering cold-temperature oils below an ISO Viscosity VG100 or lower.

Helical-Bevel Weights - Reducer

Approximate Weights [lb]

Type	W	56C	140TC	180TC	210TC	250TC	280TC	320TC	360TC
SK 92072	15	24	24	–	–	–	–	–	–
SK 92172	26	35	35	–	–	–	–	–	–
SK 92372	40	49	49	60	–	–	–	–	–
SK 92672	79	86	86	97	112	–	–	–	–
SK 9012.1 SK 9013.1	75 86	86 90	86 –	101 –	– –	– –	– –	– –	– –
SK 9016.1 SK 9017.1	77 88	88 93	88 –	104 –	– –	– –	– –	– –	– –
SK 92772	99	101	101	112	128	128	–	–	–
SK 9022.1 SK 9023.1	93 104	104 108	104 –	119 –	– –	– –	– –	– –	– –
SK 9032.1 SK 9033.1	150 154	154 165	154 165	163 –	183 –	– –	– –	– –	– –
SK 9042.1 SK 9043.1	276 287	265 291	265 291	280 300	311 –	333 –	– –	– –	– –
SK 9052.1 SK 9053.1	441 459	430 463	430 463	445 472	476 –	498 –	498 –	– –	– –
SK 9072.1 SK 9072.1/32 SK 9072.1/42	794 803 862	– 807 –	– 807 851	767 816 897	796 836 919	851 – 942	851 – –	882 – –	915 – –
SK 9082.1 SK 9082.1/42 SK 9082.1//52	1532 1435 1491	– 1424 –	– 1424 –	1338 1440 1495	1369 1471 1526	1424 1493 1548	1424 – 1548	1455 – –	1488 – –
SK 9086.1 SK 9086.1/52	2084 2042	– 2031	– 2031	1890 2046	1921 2077	1976 2099	1976 2099	2007 –	2040 –
SK 9092.1 SK 9092.1/52	3341 3299	– 3288	– 3288	3147 3303	3177 3334	3233 3356	3233 3356	3263 –	3296 –
SK 9096.1 SK 9096.1/62 SK 9096.1/63	4221 4298 4315	– 4287 4304	– 4287 4304	– 4302 4319	4057 4333 4350	4113 4355 4372	4113 4355 4372	4143 – –	4176 – –

Above weights are approximate. Depending upon ratio, oil quantity and optional equipment, reducer weights may be different than shown.

Exact weights can be obtained after the unit is fully asembled.

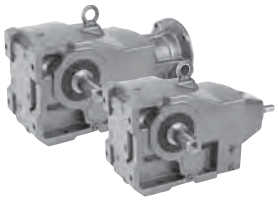

SK 9016.1, SK 9017.1 NEMA-C + W Ratings & Combinations

Model Type	Gear Ratio i_{tot}	Output Speed n_2 1750 rpm [rpm]	Output Torque* $T_{2\,max}$ [lb-in]	Maximum input power◈ Solid input shafts type "W" Input Speed 1750 rpm [hp]	1150 rpm [hp]	875 rpm [hp]	580 rpm [hp]	NEMA C-Face* Available Combinations 56C	140TC	80TC	210TC	250TC	280TC	320TC	360TC
SK 9016.1	12.51	140	4602	5.00	3.30	2.50	1.65	X	X	X					
	15.10	116	4602	5.00	3.30	2.50	1.65	X	X	X					
	17.45	100	4779	5.00	3.30	2.50	1.65	X	X	X					
	20.51	85	5133	5.00	3.30	2.50	1.65	X	X	X					
	23.11	76	4602	5.00	3.30	2.50	1.65	X	X	X					
	26.29	67	5310	5.00	3.30	2.50	1.65	X	X	X					
	30.52	57	5310	4.80	3.17	2.40	1.58	X	X	X*					
	34.81	50	5310	4.21	2.78	2.11	1.39	X	X	X*					
	40.92	43	5310	3.62	2.39	1.81	1.20	X	X	X*					
	46.11	38	5399	3.25	2.15	1.63	1.07	X	X	X*					
	52.44	33	5399	2.83	1.87	1.41	0.93	X	X	X*					
	63.97	27	5399	2.31	1.53	1.16	0.76	X	X	X*					
	71.88	24	5310	2.02	1.33	1.01	0.67	X	X						
	81.38	22	5310	1.85	1.22	0.93	0.61	X	X*						
	91.77	19	4425	1.33	0.88	0.67	0.44	X	X*						
	116.52	15	5399	1.28	0.85	0.64	0.42	X	X*						
	142.41	12	5399	1.03	0.68	0.51	0.34	X	X*						
	149.81	12	5399	1.03	0.68	0.51	0.34	X	X*						
	183.10	9.6	5399	0.82	0.54	0.41	0.27	X*	X*						
	205.93	8.5	5399	0.73	0.48	0.36	0.24	X*							
	234.64	7.5	5222	0.62	0.41	0.31	0.21	X*							
	277.84	6.3	5222	0.52	0.34	0.26	0.17	X*							
SK 9017.1	**134.32**	13	3806	0.50	0.33	0.25	0.17	X*							
	177.89	9.8	5045	0.50	0.33	0.25	0.17	X*							
	235.64	7.4	5399	0.50	0.33	0.25	0.17	X*							
	267.99	6.5	5399	0.50	0.33	0.25	0.17	X*							
	367.33	4.8	5399	0.41	0.27	0.21	0.14	X*							
	493.12	3.5	5399	0.30	0.20	0.15	0.10	X*							
	558.25	3.1	5399	0.27	0.18	0.13	0.09	X*							
	629.56	2.8	5399	0.24	0.16	0.12	0.08	X*							
	1256.07	1.4	5399	0.12	0.08	0.06	0.04	X*							
	1412.69	1.2	5399	0.10	0.07	0.05	0.03	X*							

* Caution - The motor power may exceed the gear unit's mechanical torque capacity
◈ The mechanical power limit of the solid input shaft type "W" may limit the reducer rating.
All ratings are mechanical. See page 14 for thermal considerations.

lb	W	56C	140TC	180TC
SK 9016.1	77	88	88	104
SK 9017.1	88	93	-	-

SK 9016.1 + NEMA

SK 9016.1

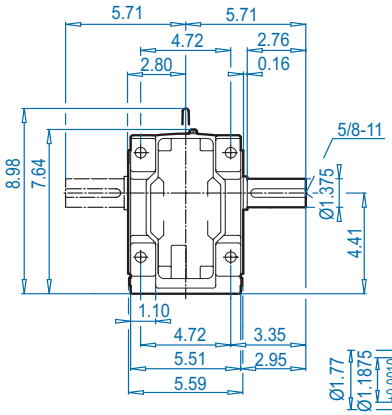

SK 9016.1AX

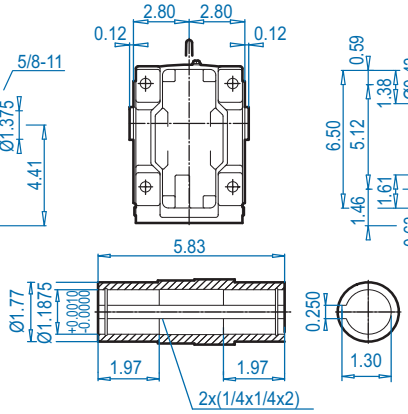

NEMA Input

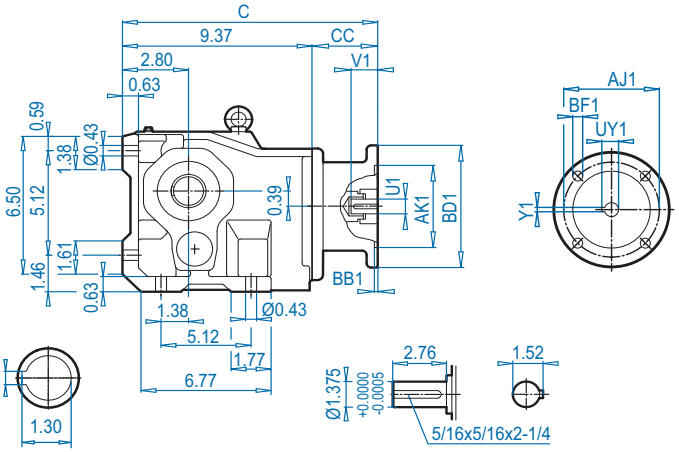

SK 9016.1VF

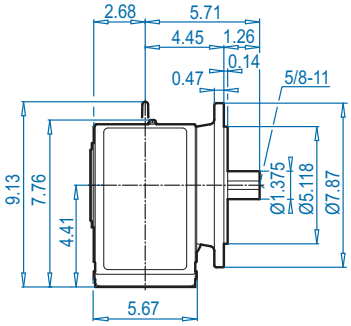

SK 9016.1AF

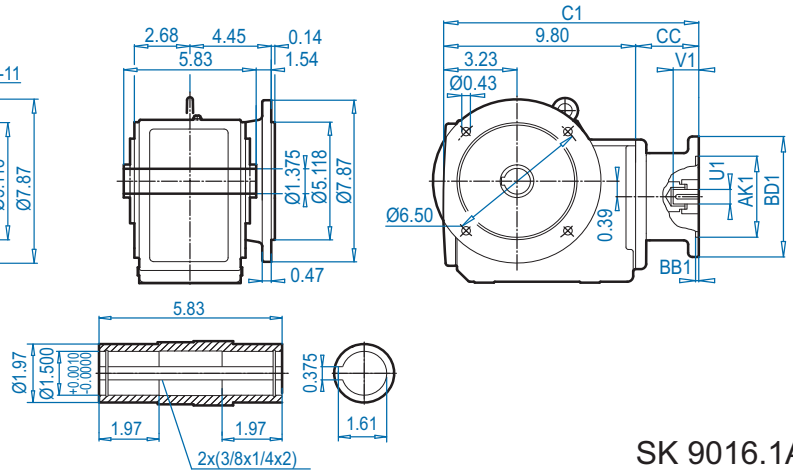

SK 9016.1AX**B** ⇨📖 574

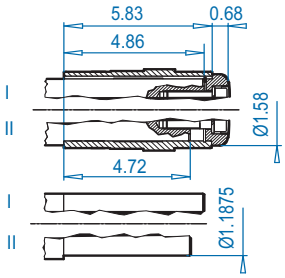

SK 9016.1AF**B** ⇨📖 574

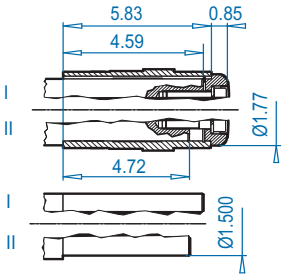

NEMA Dimensions

Type	AJ1	AK1	BB1	BD1	BF1	U1	V1	UY1	Y1	C	C1	CC
56C	5.88	4.500	0.18	6.54	0.43	0.625	2.06	0.71	0.188	13.87	14.30	4.50
140TC	5.88	4.500	0.18	6.54	0.43	0.875	2.12	0.96	0.188	13.87	14.40	4.50
180TC	7.25	8.500	0.23	9.17	0.59	1.125	2.62	1.24	0.250	15.02	15.45	5.65

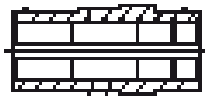

NORD DRIVESYSTEMS

Hollow Shaft Dimensions (AZ-AF)

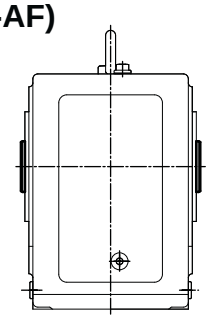

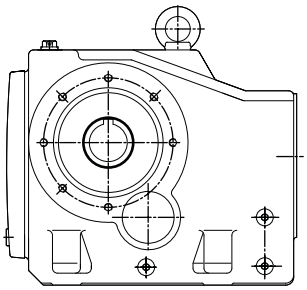

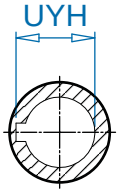

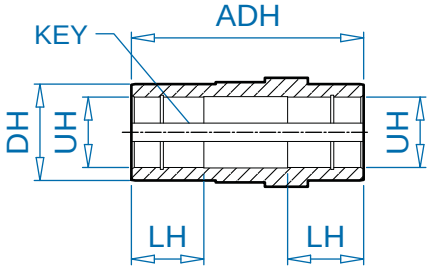

TYPE	UH	DIAMETER TOLERANCE	ADH	LH	DH	UYH	KEY SIZE w x h x l	KEY QTY
SK 9012.1 AZ/AF	1.375*	+0.0010 / -0.0000	5.83	1.97	1.97	1.52	5/16 x 5/16 x 2	2
SK 9013.1 AZ/AF	1.4375	+0.0010 / -0.0000	5.83	1.97	1.97	1.61	3/8 x 3/8 x 2	2
	1.250	+0.0010 / -0.0000	5.83	1.97	1.97	1.37	1/4 x 1/4 x 2	2
	35mm	+0.025 / -0.000mm	148mm	50mm	50mm	38.3mm	10 x 8 x 60mm	2
SK 9016.1 AZ/AF	1.375	+0.0010 / -0.0000	5.83	1.97	1.97	1.52	5/16 x 5/16 x 2	2
SK 9017.1 AZ/AF	1.500*	+0.0010 / -0.0000	5.83	1.97	1.97	1.61	3/8 x 1/4 x 2	2
	1.4375	+0.0010 / -0.0000	5.83	1.97	1.97	1.61	3/8 x 3/8 x 2	2
	1.250	+0.0010 / -0.0000	5.83	1.97	1.97	1.37	1/4 x 1/4 x 2	2
	40mm	+0.025 / -0.000mm	148mm	50mm	50mm	42.2mm	12 x 7 x 60mm	2
SK 9022.1 AZ/AF	1.500*	+0.0010 / -0.0000	7.09	2.36	2.17	1.67	3/8 x 3/8 x 2-1/4	2
SK 9023.1 AZ/AF	1.4375	+0.0010 / -0.0000	7.09	2.36	2.17	1.61	3/8 x 3/8 x 2-1/4	2
	40mm	+0.025 / -0.000mm	180mm	60mm	55mm	43.3mm	12 x 8 x 60mm	2
SK 9032.1 AZ/AF	2.000*	+0.0012 / -0.0000	8.27	2.76	2.76	2.22	1/2 x 1/2 x 2-3/4	2
SK 9033.1 AZ/AF	1.9375	+0.0012 / -0.0000	8.27	2.76	2.76	2.16	1/2 x 1/2 x 2-3/4	2
	1.6875	+0.0012 / -0.0000	8.27	2.76	2.76	1.86	3/8 x 3/8 x 2-3/4	2
	50mm	+0.025 / -0.000mm	210mm	70mm	70mm	53.8mm	14 x 9 x 70mm	2
SK 9042.1 AZ/AF	2.375*	+0.0012 / -0.0000	9.45	3.15	3.15	2.56	5/8 x 7/16 x 3	2
SK 9043.1 AZ/AF	2.4375	+0.0012 / -0.0000	9.45	3.15	3.15	2.62	5/8 x 7/16 x 3	2
	2.1875	+0.0012 / -0.0000	9.45	3.15	3.15	2.41	1/2 x 1/2 x 3	2
	60mm	+0.030 / -0.000mm	240mm	80mm	80mm	64.4mm	18 x 11 x 80mm	2
SK 9052.1 AZ/AF	2.750*	+0.0012 / -0.0000	11.81	3.94	3.94	3.03	5/8 x 5/8 x 4	2
SK 9053.1 AZ/AF	2.9375	+0.0012 / -0.0000	11.81	3.94	3.94	3.14	3/4 x 1/2 x 4-1/2	2
	70mm	+0.030 / -0.000mm	300mm	100mm	100mm	74.9mm	20 x 12 x 100mm	2
SK 9072.1 AZ/AF	3.250*	+0.0012 / -0.0000	13.78	4.72	4.72	3.59	3/4 x 3/4 x 4-3/4	2
	2.9375	+0.0012 / -0.0000	13.78	4.72	4.72	3.14	3/4 x 1/2 x 4-1/2	2
	2.750	+0.0012 / -0.0000	13.78	4.72	4.72	3.03	5/8 x 5/8 x 4-1/2	2
	3.4375	+0.0014 / -0.0000	13.78	4.72	4.72	3.82	7/8 x 7/8 x 4-3/4	2
	3.625	+0.0014 / -0.0000	13.78	4.72	4.72	4.01	7/8 x 7/8 x 4-3/4	2
	80mm	+0.030 / -0.000mm	350mm	120mm	120mm	85.4mm	22 x 14 x 110mm	2
	90mm	+0.035 / -0.000mm	350mm	120mm	120mm	95.4mm	25 x 14 x 140mm	2
SK 9082.1 AZ/AF	4.000*	+0.0014 / -0.0000	16.54	5.51	5.51	4.44	1 x 1 x 4-1/2	2
	3.9375	+0.0014 / -0.0000	16.54	5.51	5.51	4.38	1 x 1 x 4-1/2	2
	4.4375	+0.0014 / -0.0000	16.54	5.51	5.51	4.76	1 x 3/4 x 6	2
	110mm	+0.035 / -0.000mm	420mm	140mm	140mm	116.4mm	28 x 16 x 120mm	2
SK 9086.1 AZ/AF	4.500	+0.0014 / -0.0000	19.69	6.30	6.30	4.95	1 x 1 x 6-1/2	2
	4.750*	+0.0014 / -0.0000	19.69	6.30	6.30	5.30	1-1/4 x 1-1/4 x 6-1/2	2
	120mm	+0.035 / -0.000mm	500mm	160mm	160mm	127.4mm	32 x 18 x 150mm	2

* standard size

- Dimensions are in inches unless otherwise noted.
- For shaft sizes not shown, consult NORD.

This page intentionally left blank

Motor – Drum

This page intentionally left blank

MAX-E1® FAMILY

TYPE: AEHE, AEHH8N, AEHH8NCF, AEUH8NDC - NEMA PREMIUM

Effective 06-14-15
Supercedes 05-01-13

APPLICATIONS:

- Fans & Blowers
- Pumps
- Crushers
- Compressors
- Mixers
- Conveyors
- Any Severe Duty/ Petro-Chem/ Pulp & Paper Application

FEATURES:

- 3/4 - 800 HP
- 1 - 100 HP: Foot Mounted with C-Flange or Round Body C-Flange
- 3600, 1800, 1200, 900 RPM
- Totally Enclosed Fan Cooled (IP54 Rating; IP55 Ratings for Frames Sizes 5000 and Larger)
- NEMA Premium Efficient Ratings From 1 - 500 HP, Denoted Catalog Number Prefix of "EP" - Note (1)
- Department of Energy Efficiency Certification # CC002A
- 36 Month Warranty from Date of Manufacture
- 3 Phase, 60 Hz , 230/ 460V (Usable on 208V) – 150 HP and Larger are 460V Only - Note (2)
- 575V Ratings Available, Denoted by a Catalog Number Suffix of "5" - Note (2)
- 1.15 Service Factor – Continuous
- Class F Insulation with Phenolic Alkyd Resin Varnish
- Class B Temperature Rise
- NEMA Design B Torques as a Minimum; Design C Motors are Denoted with a superscript "C"
- Oversized Main Conduit Box Rotatable in 90 Degree Increments – Fully Gasketed with NPT Threaded Entrance – F1 Mounted. F2 Available – See EXTRAS/ OPTIONS Below
- Fabricated Steel Main Lead Box on 5000 Frames and Larger, Cast Iron Main Lead Box for 440 Frames and Below
- Designed for 40˚C Ambient Temperature and 3300 ft. Elevation - Note (3)
- CSA Certified for Class I, Division II, Groups B, C, D; Class II, Groups F & G. Non Sparking, Non Static Fan - Note (4)
- Bi-Directional Rotation Except 2 Pole Motors 5000 Frame and Larger Which are Uni-Directional CCW Facing the Drive-End. See EXTRAS/ OPTIONS Below if CW Rotation is Required.
- Cast Iron Frame, End Brackets, and Fan Cover
- Dual Drilled Feet – Longer Frames. (i.e. 145T Drilled Also for 143T) Through 449T Frames Only (5)
- 1045 Carbon Steel Shaft.
- Aluminum Die Cast Squirrel Cage Rotor Construction for Frames 5011 and Smaller. Copper/ Copper Alloy Rotor for Frames 5800-6800 Frames.
- Paint System: Phenolic Rust Proof Base Plus Polyurethane Top Coat
- Paint Color: Light Grey – Munsell N5.0
- Vacuum De-Gassed Re-Greasable Ball Bearings (or Roller Type) on 280TS Frames and Larger with Polyrex EM Grease
- Single Shielded Bearings on Frames 140T-280T Pre-Packed with Polyrex EM Grease
- Automatic Grease Discharge Fittings on Frames with Re-Greaseable Motors
- Labyrinth Type Metal Flinger on Both Ends for Frames 280TS to 6800
- Rubber Flinger on Drive-End for Frames 140T to 280T
- Cast Iron Inner and Outer Bearing Caps on Both Ends for Frames 280TS to 6800
- Grounding Terminal Inside Main Box
- Stainless Steel Nameplate
- UL Recognized and CSA Approved for Inverter Duty per NEMA MG 1, Part 31, 4.4.2 - Note (6)
- Inverter Duty Magnet Wire Capable of Withstanding Voltage Spikes of Up to 2200 Volts
- **Precautions should be taken to eliminate or reduce shaft currents that may be imposed on the motor by the VFD as stated per NEMA MG1, Part 31.4.4.3.**
- Insulated Non-Drive End Bearing on 2-Pole Motors 600 HP and Larger
- Speed Ranges: 20:1 VT, 10:1 CT. 350 HP and Larger are 3:1 CT
- 9 Leads - 5 HP and Below, 12 Leads - 7.5 HP to 125 HP, 6 Leads - 150 HP and Larger
- Breather Drains in Both End Brackets for Vertical Mounts

EXTRAS/ OPTIONS:

Please refer to the modifications document on our web site for common modifications that can be performed.

Notes:

(1) NEMA Premium Efficiency levels only applies to 1-500 HP, 3600, 1800, 1200 RPM.
(2) 208V or the current rating will not appear on the motor nameplate. Please see Modification for Nameplate adder. TWMC carries minimal 575V stock. Please check availability to ensure required motors are in stock. Ratings may be available from our Canadian warehouses or factory. Pricing and lead time may vary.
(3) Please consult factory for suitability in higher ambients and higher elevations.
(4) Self-Certification applies to 600 HP and above.
(5) EP3006, EP3502 and EP3504 are not dual drilled.
(6) Motor service factor is 1.0 when operated on a VFD.

DATE JAN. 4, 2007	OUTLINE DIMENSIONS	MOTOR TYPE: AEUH8NDC
CAT. #: EPV0024C	3-PHASE INDUCTION MOTOR	FRAME NO. 145TC

Pole	HP	kW	Hz	VOLT	Syn. Speed r/min(rpm)
4	2	1.5	60	230/460	1800

Ins	Rating	Dimension in	Approx Weight	Bearings
F	CONT.	inches	66 LBS	DE: 6205ZZ NDE: 6205ZZ

Totally Enclosed Fan-Cooled Vertical Type. Squirrel-Cage Rotor.

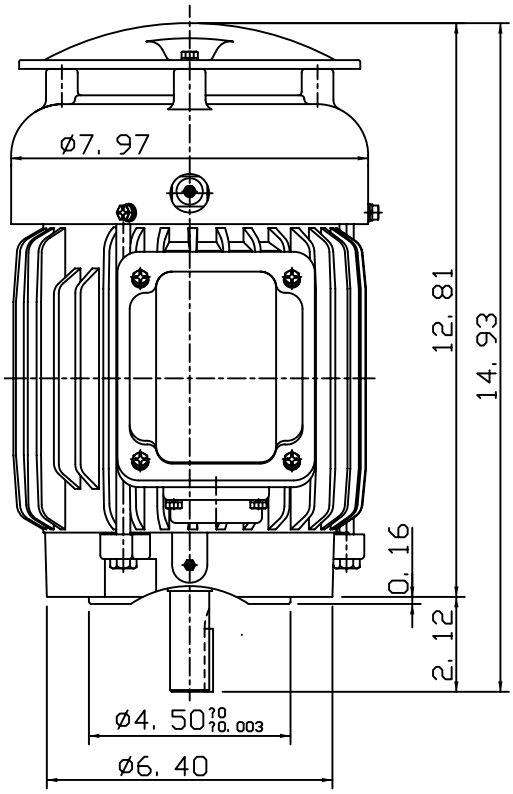

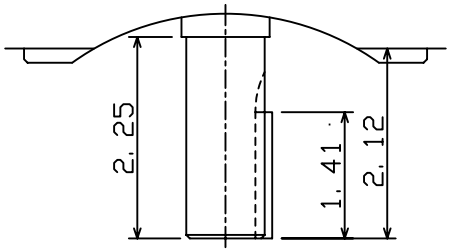

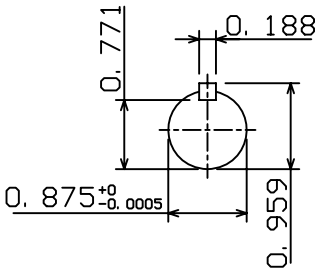

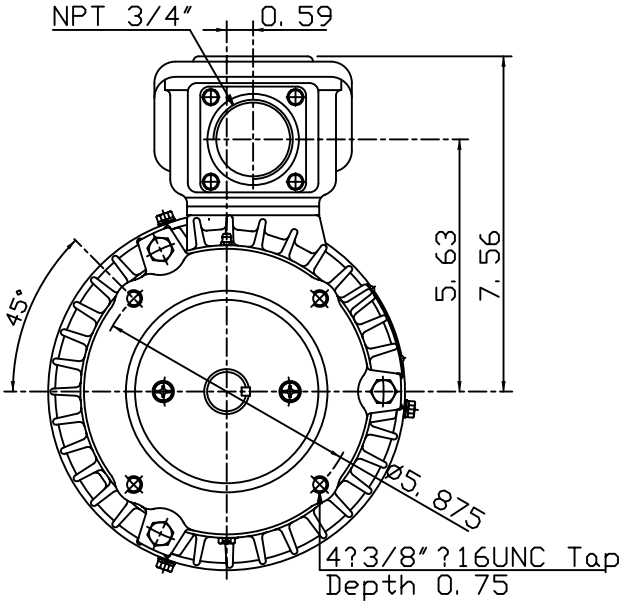

0			

DWN.	J. H. LIANG	12-23-06	TECO Westinghouse	DWG NO.
CHKD.	H. C. YAN	12-28-06		31049M990060
APPD.	M. C. TSAI	12-28-06		

TECO Westinghouse

ISSUED	PERFORMANCE DATA	ENCLOSURE
8/29/2014	3-PHASE INDUCTION MOTOR	TEFC
TYPE		CATALOG#
AEUH8NDC		EPV0024C

NAMEPLATE INFORMATION

OUTPUT HP	OUTPUT KW	POLE	FRAME SIZE	VOLTAGE	HZ	RATED AMBIENT	INS. CLASS	NEMA DESIGN	TIME RATING	SERVICE FACTOR
2	1.5	4	145TC	230/460	60	40°C	F	B	CONT.	1.15

VARIABLE FREQUENCY DRIVE SERVICE

VARIABLE TORQUE			
HZ	HP	RPM	TORQUE (lb-ft)
3~60	0.0003~2	90~1800	0.0175~6.035

OHMS/PHASE EQUIVALENT WYE CIRCUIT (AT RATED OPERATING TEMPERATURE 25°C)				
R1	R2	X1	X2	X_m
3.9555	4.3639	10.417	6.5877	170.99

CONSTANT TORQUE				CONSTANT HORSEPOWER			
HZ	HP	RPM	TORQUE (lb-ft)	HZ	HP	RPM	TORQUE (lb-ft)
6~60	.2~2	180~1800	6.035	60~120	2	1800~3600	6.035~3.0175

TYPICAL PERFORMANCE

FULL LOAD RPM	EFFICIENCY FULL LOAD MIN.%	EFFICIENCY FULL LOAD NOM.%	EFFICIENCY 3/4 LOAD %	EFFICIENCY 1/2 LOAD %	POWER FACTOR FULL LOAD %	POWER FACTOR 3/4 LOAD %	POWER FACTOR 1/2 LOAD %	SOUND PRESSURE LEVEL @ 3 FT Db(A)
1740	84	86.5	84	84	78	70	57	51

CURRENTS NO LOAD AT 208 VOLT	NO LOAD AT 230 VOLT	NO LOAD AT 460 VOLT	FULL LOAD AT 208 VOLT	FULL LOAD AT 230 VOLT	FULL LOAD AT 460 VOLT	LOCKED ROTOR AT 208 VOLT	LOCKED ROTOR AT 230 VOLT	LOCKED ROTOR AT 460 VOLT	NEMA KVA CODE LETTER	SAFE STALL TIME IN SECONDS COLD	SAFE STALL TIME IN SECONDS HOT
2.55	2.92	1.46	6.15	5.56	2.78	45.2	50.0	25	L	43	30

TORQUE FULL LOAD (lb-ft)	TORQUE LOCKED ROTOR %FLT	TORQUE PULL UP %FLT	TORQUE BREAK DOWN %FLT	INERTIA ROTOR WR^2 ($lb\text{-}ft^2$)	INERTIA NEMA LOAD WK^2 ($lb\text{-}ft^2$)	INERTIA MAX ALLOWABLE WK^2 ($lb\text{-}ft^2$)	ACCEL TIME (DOL) NEMA LOAD WK^2 Sec	ACCEL TIME (DOL) MAX ALLOWABLE WK^2 Sec	ALLOWABLE STARTS PER HOUR COLD	ALLOWABLE STARTS PER HOUR HOT
6.04	270	220	330	0.108	11	51	3.83	17.61	2	1

APPROVED:	M. PRATER	DRAWING NO.	31057EPV0024C	REVISION:	1

DATE: September 13, 2006	CONNECTION DIAGRAM	CATALOG NO.: EPV0024C

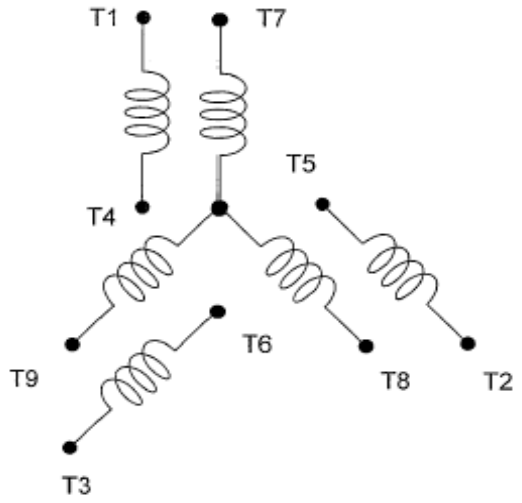

SCHEMATIC - 2Y/Y CONNECTION

ACROSS THE LINE CONNECTION

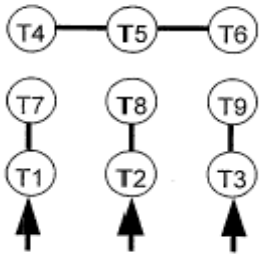

LINE
230 VOLT CONNECTION

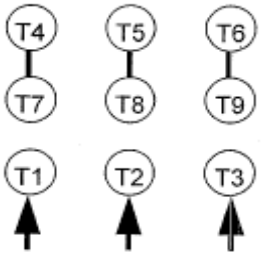

LINE
460 VOLT CONNECTION

TECO Westinghouse	DWG NO. DAC-1566-2

Enviro-Care
A WAMGROUP® Company

Gear Reducer - Auger

This page intentionally left blank

Clincher™ Shaft Mount Reducers
Selection & Combinations

Selection

- SK 0182NB
- SK 0282NB
- SK 1382NB
- SK 1282/02
- SK 1282
- SK 2282
- SK 2382
- SK 2282/02
- SK 3282
- SK 3382
- SK 3282/12
- SK 4282
- SK 4382
- SK 4282/12
- SK 5282
- SK 5382
- SK 5282/12
- SK 6282
- SK 6382
- SK 6282/22
- SK 7282
- SK 7382
- SK 7382/22
- SK 7382/32
- SK 8282
- SK 8382
- SK 8382/32
- SK 8382/42
- SK 9282
- SK 9382
- SK 9382/42
- SK 9382/52
- SK 10282
- SK 10382
- SK 10382/52
- SK 11282
- SK 11382
- SK 11382/52
- SK 12382

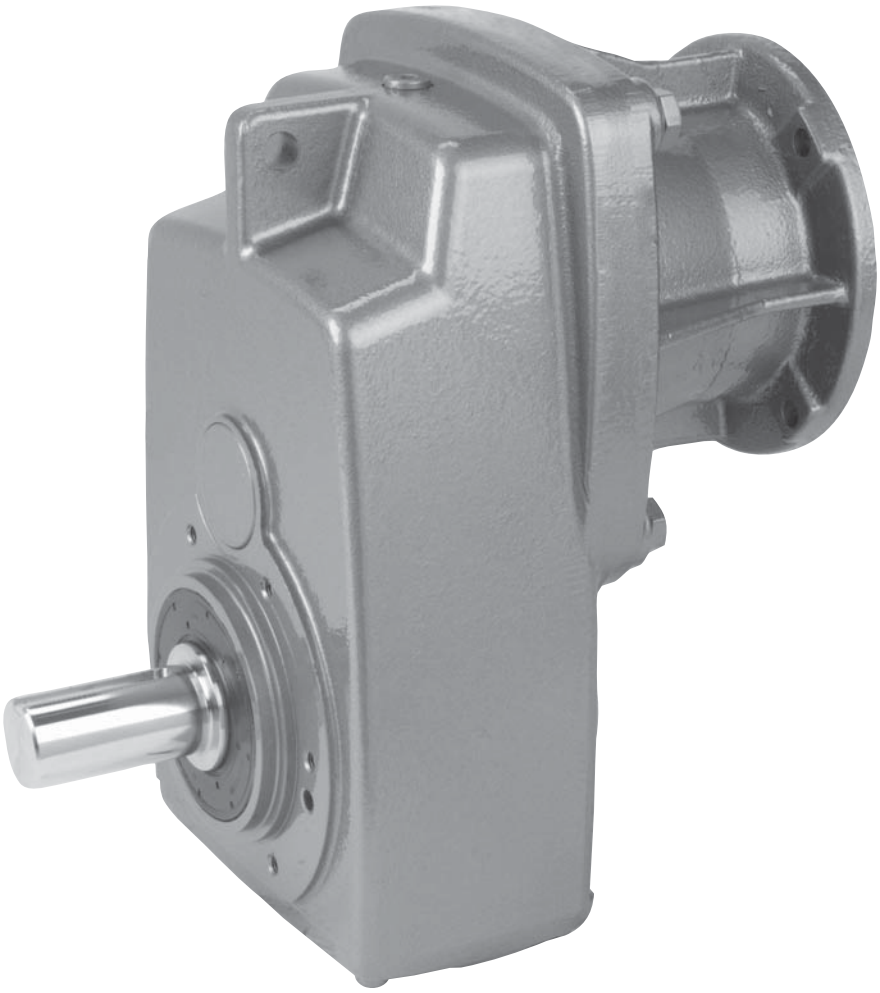

DRIVESYSTEMS

www.nord.com

UNICASE™

Model Type	Gear Ratio i_{tot}	Output Speed n_2 1750 rpm [rpm]	Output Torque* $T_{2\,max}$ [lb-in]	Maximum input p Solid input shafts ty Input Speed 1750 rpm [hp]	1150 rpm [hp]	875 rpm [hp]
SK 2282	4.51	388	1646	5.00	3.30	2.50
	5.72	306	1876	5.00	3.30	2.50
	6.43	272	2000	5.00	3.30	2.50
	7.48	234	2151	5.00	3.30	2.50
	8.37	209	2266	5.00	3.30	2.50
	9.03	194	2965	5.00	3.30	2.50
	10.15	172	3151	5.00	3.30	2.50
	11.81	148	3398	5.00	3.30	2.50
	13.23	132	3584	5.00	3.30	2.50
	16.53	106	4168	5.00	3.30	2.50
	18.51	95	4301	5.00	3.30	2.50
	21.90	80	4248	5.00	3.30	2.50
	23.96	73	3850	4.46	2.94	2.23
	24.97	70	4337	4.82	3.18	2.41
	26.83	65	3885	4.01	2.64	2.00
	29.65	59	4425	4.14	2.73	2.07
	31.23	56	3938	3.50	2.31	1.75
	36.54	48	4434	3.38	2.23	1.69
	37.18	47	4071	3.04	2.00	1.52
	43.71	40	4983	3.16	2.09	1.5

PARALLEL HELICAL CLINCHER

PERFORMANCE SPECIFICATIONS

NORD DRIVESYSTEMS

PERFORMANCE SPECIFICATIONS

Configuration : offset parallel
Integral motor HP (min/ max) : 0.16 / 200
Integral motor kW (min/ max) : 0.12 / 160
Typical efficiency : 97%
Number of gear reductions : 2 to 6

MOUNTING STYLES

Shaft mount housing style : standard
Integral torque tab : standard
B5 flange outside diameter range [in] : 5.51 to 25.98
B5 flange outside diameter range [mm] : 140 to 660
Footed housing style available
B14 flange outside diameter range [in] : 3.94 to 17.72
B14 flange outside diameter range [mm] : 100 to 450

OPTIONS

NEMA or IEC input
Custom adapter flange
Flange pilot removed
Shock dampeners
Effective drywell with flange

RATIO AND SPEED

Minimum standard ratio : 4.03:1
Maximum standard ratio : 6616.79 (compound assembly)
Minimum output speed from 1750 rpm motor : 0.26 rpm
Maximum output speed from 1750 rpm motor : 434 rpm

Unit Size	Torque Max.		Ratio Range	Keyed Hollow Shaft Dia.					Solid Shaft Dia.		Shrink Disc Shaft Dia.	
	[lb-in]	[Nm]	min.-max.	Std-[in]	Opt.-[in]	Opt.-[in]	Opt.-[in]	[mm]	[in]	[mm]	[in]	[mm]
SK 0182 NB	1,027	116	4.24 - 81.71	0.750	0.500	-	-	25	0.750	25	-	-
SK 0282 NB	1,460	165	4.03 - 139.16	1.000	1.1875	0.750	-	30	1.000	25	1.188	30
SK 1282	2,620	296	4.79 - 109.50	1.188	1.250	1.000	.0750	30	1.250	30	1.250	30
SK 1382 NB	3,275	370	16.28 - 381.45	1.375	1.4375	1.250	-	35	1.250	30	1.500	35
SK 2282	4,983	563	4.51 - 127.51	1.438	1.500	1.375	1.250	35	1.375	35	1.500	35
SK 2382	4,983	563	82.22 - 763.41	1.438	1.500	1.375	1.250	35	1.375	35	1.500	35
SK 3282	8,983	1,015	4.48 - 112.23	1.625	1.500	1.438	-	40	1.875	45	1.625	40
SK 3382	9,195	1,039	89.60 - 1022.42	1.625	1.500	1.438	-	40	1.875	45	1.625	40
SK 4282	17,700	2,000	4.70 - 155.40	2.062	2.000	1.938	1.688	50	2.250	55	2.000	50
SK 4382	18,381	2,077	66.68 - 1585.08	2.062	2.000	1.938	1.688	50	2.250	55	2.000	50
SK 5282	28,630	3,235	4.32 - 134.03	2.438	2.375	2.188	-	60	2.500	65	2.500	60
SK 5382	28,320	3,200	82.72 - 1367.08	2.438	2.375	2.188	-	60	2.500	65	2.500	60
SK 6282	40,152	4,537	4.39 - 80.33	2.750	2.938	2.438	-	70	3.000	75	3.000	70
SK 6382	53,100	6,000	24.42 - 551.58	2.750	2.938	2.438	-	70	3.000	75	3.000	70
SK 7282	57,266	6,471	4.26 - 69.73	3.188	3.250	2.938	-	80	3.500	90	3.188	80
SK 7382	73,455	8,300	23.46 - 338.79	3.188	3.250	2.938	-	80	3.500	90	3.188	80
SK 8282	93,969	10,618	4.52 - 72.71	4.062	4.000	3.938	3.438	100	4.250	110	4.000	100
SK 8382	116,820	13,200	30.92 - 386.68	4.062	4.000	3.938	3.438	100	4.250	110	4.000	100
SK 9282	158,681	17,930	5.34 - 34.38	4.750	4.938	4.438	-	120	5.250	140	4.750	125
SK 9382	224,790	25,400	35.61 - 352.36	4.750	4.938	4.438	-	120	5.250	140	4.750	125
SK 10282	283,200	32.000	5.20 - 18.24	-	-	-	-	160	6.250	160	6.250	160
SK 10382	329,220	37,200	21.00 - 357.40	-	-	-	-	160	6.250	160	6.250	160
SK 11282	371,700	42,000	7.67 - 34.85	-	-	-	-	180	7.000	180	7.000	180
SK 11382	610,650	69,000	31.96 - 224.76	-	-	-	-	180	7.000	180	7.000	180
SK 12382	796,500	90,000	69.12 - 201.75	-	-	-	-	180	7.000	180	7.000	180

PARALLEL HELICAL CLINCHER

SHAFT DATA

- AISI 1045 or 4140 input and output shaft material
- Input and output shaft key dimensions are according to AISI B17 [in]
- Input and output shaft key dimensions are according to DIN 747 [mm]
- Standard output shaft drill and tap
- 2 hollow shaft keys
- Shrink disc size range [in] : 1.188 to 7.000
- Shrink disc size range [mm] : 30 to 180
- Minimum gripping safety factor range [h6 fit] : 2.2 to 5.9

SHAFT DATA OPTIONS

Double solid output shaft, Shaft fixing element, Custom shaft diameters, Hollow spline per DIN 5480, Custom spline, Cross drilled holes, 304 stainless steel

MOTOR MOUNTING

- Integral motor : 1/6 to 250 HP
- C-face adapter frame size range : 56C to 360TC
- IEC adapter [B5] frame size range : IEC 63 to IEC 315
- Sugar scoop motor availability : 56 to 365T
- Top mount platform motor availability : 56 to 405T

MOTOR MOUNTING OPTIONS

Custom motor adapter, Custom coupling diameter

GEARING

- Up to AGMA Class 13 gear quality rating
- 58 Rockwell C minimum gear hardness
- Ground or skive hobbed hard gear teeth finishing
- Standard drop forged gear blanks
- 275% momentary overload capacity
- Standard hunting tooth ratios

HOUSING

- Class 35 gray iron housing material
- Single setup machining method
- UNICASE™ one piece housing design
- Seals directly contact main housing
- Exceptional housing torsional stiffness
- Thick housing wall section
- Castings are dip sealed

BEARINGS

- ABEC-1 quality bearings
- Standard output ball bearings
- Tapered or spherical heavy-duty output bearings

LUBRICANT & SEALING COMPONENTS

- Factory filled ISO 220 mineral oil
- Standard AUTOVENT™ breather style
- QUADRILIP™ output seal design
- 1 double lip & 1 single lip output shaft oil seals
- Nitrile rubber oil seals

LUBRICANT & SEALING OPTIONS

Custom synthetic lubricating oil, Custom temperature lubricating oil, Fluid grease lubricant, Food grade lubricating oil, Long term storage preparation, Magnetic drain plug, Bulls eye sight glass, Custom drain plug, Fluorinated rubber oil seal material, Custom oil seals

INTERNAL PARTS ASSEMBLY

- Heavy press fit assembly method
- Standard reversing duty
- Typical backlash range [arc minutes] : 6 to 11

INTERNAL PARTS ASSEMBLY OPTIONS

Internal backstop

ENVIRONMENTAL PROTECTION

- Exterior primer coverage on all metal exterior surfaces
- Water Based Resin paint type
- 316 stainless steel flake paint additive
- H1 USDA incidental contact exposure

ENVIRONMENTAL OPTIONS

NSD+ protection, Custom paint, Shaft seal covers, High pressure washdown IP66 oil seals

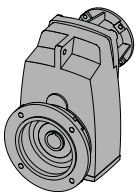
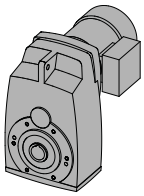
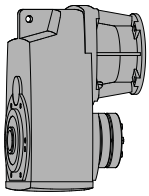
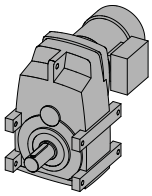

DRIVESYSTEMS

www.nord.com

NORD Gear Corporation
National Customer Service Toll-Free: 888.314.6673
info.us@nord.com

NORD Gear Limited
Toll-Free in Canada: 800.668.4378
info.ca@nord.com

WEST
Corona, CA (Los Angeles)
Phone: 608.849.0190

MIDWEST
Waunakee, WI (Madison)
Phone: 608.849.7300

EAST
Charlotte, NC
Phone: 608.849.0140

CANADA
Brampton, ON (Toronto)
Phone: 905.796.3606

100200018/1011

Clincher™ Ordering Guide

	Gear Unit	Shaft/Mounting	Reducer Options		Motor/Input	Motor Options
SK	❶ 4282	❷ AF	❸ BH	-	❹ N140TC	
					see page 690	see page 690

❶

Gear Unit			
0182NB	1382NB	1282/02	6382/22
0282NB	2382	2282/02	6382/32
1282	3382	3282/12	7382/22
2282	4382	4282/12	7382/32
3282	5382	5282/12	8382/22
4282	6382		8382/32
5282	7382		9382/42
6282	8382		9382/52
7282	9382		10382/52
8282	10382		11382/52
9282	11382		
10282	12382		
11282			

❷

Shaft/Mounting		
VZ - Solid Shaft/B14 Flange	**VX -** Solid Shaft/Foot	**AZ** - Hollow Shaft/B14 Flange
VF - Solid Shaft/B5 Flange	**LX -** Double Solid Shaft/Foot	**AF** - Hollow Shaft/B5 Flange
SCP - Screw Conveyor Package		**AX** - Hollow Shaft/Foot

❸

Reducer Options		
❒ **B -** Fixing Element Kit	❒ **VL -** Heavy Duty Output Bearings	❒ **VI -** Fluoro-rubber Seals
❒ **G -** Rubber Buffers	❒ **VL2 -** Spread Bearing Design	❒ **OSG -** Oil Sight Glass
❒ **VG -** Heavy Duty Rubber Buffers	❒ **VL3 -** Oil Safe Spread Bearing Design	❒ **OA -** Oil Expansion Chamber
❒ **H -** Hollow Shaft Cover	❒ **VL4-** Drywell Drop Bearing Design	❒ **OC -** Oil Cooler
❒ **H66 -** IP66 Hollow Shaft Cover	❒ **LX-** Double Solid Shaft	❒ **WC -** Water Cooling Cover
❒ **SH -** Shrink Disc & Cover	❒ **SM5 -** Stainless Steel Output Shaft	❒ **OT -** Oil Reservoir Tank
❒ **VSH -** Heavy Duty Shrink Disc & Cover	❒ **SWA -** Special Hollow Shaft	❒ **MDP -** Magnetic Drain Plug
❒ **PR -** Flange Pilot Removal	❒ **SWV -** Special Solid Shaft	❒ **ADP -** Additional Drain Plug
❒ **LL -** Long Term Storage	❒ Cross Drilled Shaft	

❹

Input Shaft	NEMA Adapter	IEC Adapter	Integral Motors		Integral Energy Efficent Motors		Scoop	Motor Platform	Servo Adapter (Keyed)
W	N56C	IEC 63	63S/4 - 0.16hp	160L/4 - 20hp	80LH/4 - 1hp	200LH/4 - 40hp	S56	MKN056	SEP 100
	N140TC	IEC 71	63L/4 - 0.25hp	180MX/4 - 25hp	90SH/4 - 1.5hp	225SH/4 - 50hp	S140T	MKN140	SEP 130
	N180TC	IEC 80	71S/4 - 0.33hp	180LX/4 - 30hp	90LH/4 - 2hp	225MH/4 - 60hp	S180T	MKN180	SEP 165
	N210TC	IEC 90	71L/4 - 0.50hp	200L/4 - 40hp	100LH/4 - 3hp	250MH/4 - 75hp	S210T	MKN210	SEP 215
	N250TC	IEC 100	80S/4 - 0.75hp	225S/4 - 50hp	112MH/4 - 5hp	280SH/4 - 100hp	S250T	MKN250	SEP 300
	N280TC	IEC 112	80L/4 - 1hp	225M/4 - 60hp	132SH/4 - 7.5hp	280MH/4 - 125hp	S280T	MKN280	**Servo Adapter (Clamp)**
	N320TC	IEC 132	90S/4 - 1.5hp	250M/4 - 75hp	132MH/4 - 10hp	315SH/4 - 150hp	S320T	MKN320	SEK 100
	N360TC	IEC 160	90L/4 - 2hp	280S/4 - 100hp	160MH/4 - 15hp	315MH/4 - 175hp	S360T	MKN360	SEK 130
	N400TC	IEC 180	100L/4 - 3hp	280M/4 - 125hp	160LH/4 - 20hp	315MAH/4 - 200hp	S400T	MKN400	SEK 165
		IEC 200	100LA/4 - 5hp	315S/4 - 150hp	180MH/4 - 25hp	315LH/4 - 250hp			SEK 215
		IEC 225	112M/4 - 5.4hp	315M/4 - 175hp	180LH/4 - 30hp				SEK 300
		IEC 250	132S/4 - 7.5hp	315MA/4 - 200hp					
		IEC 280	132M/4 - 10hp	315L/4 - 250hp					
		IEC 315	160M/4 - 15hp	Other Speeds Available		Other Speeds Available			

Product Specifications

Ratio

90.52 :1

see pages 244- 288

— OR —

Output Speed

rpm

see pages 244 - 288

Mounting Position

- ❍ M1
- ❍ M2
- ☒ M3
- ❍ M4
- ❍ M5
- ❍ M6
- ❍ Special _____

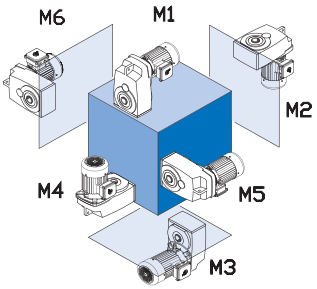

Paint

- ❍ Standard Stainless Steel Paint
- ❍ NSD+ (gray)
- ❍ NSD+W (white)
- ❍ NSD-X3 (gray)
- ❍ NSD-X3W (white)
- ❍ Casting Primed
- ❍ Special BLUE

Lubricant

- ❍ Standard
- ❍ Synthetic
- ❍ Food Grade
- ❍ Other _____

Hollow Shaft Diameter (If required)

see pages 388 - 393

B5 Flange Diameter (If required)

SCP Drive Shaft Diameter (If required)

see page 29

Gearmotor Only Details

Voltage & Frequency

- ❍ 230/460V-60Hz (460V only ≥ 40 hp)
- ❍ 575V-60Hz
- ❍ 208V-60Hz
- ❍ 400V-50Hz
- ❍ 115/230V-60Hz, 1 ph.
- ❍ Other _____

Terminal Box Pos.

- ❍ TB1
- ❍ TB2
- ❍ TB3
- ❍ TB4

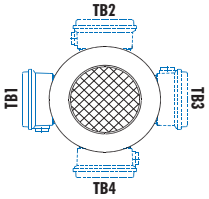

Mtg. Pos. M1 Shown

Conduit Entry Loc.

- ❍ CE I *
- ❍ CE II
- ❍ CE III *
- ❍ CE IV

* Brakemotor

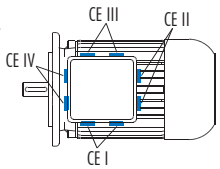

Mtg. Pos. M1 Shown

Selection Information

Gearbox Selection

A number of factors are considered when selecting a gear unit, including gearbox rating, service factor, speed and speed variation, horsepower, thermal capacity, ratio, physical size, ambient conditions and cost. Below are some guideline steps to help aid in the gear unit selection.

1. Determine the speed and/or gear ratio
2. Determine the required power or torque
3. Determine Service Factor
4. Select the basic gearbox type and input
5. Determine the required mounting position
6. Select options
7. Checks – overhung load, thrust load, NEMA motor weight, thermal considerations, and other application considerations

1. Speed and Gear Ratio

The first step in selecting a gear unit is determining the final output speed or speeds you need. This speed is normally described in revolutions per minute (rpm). This output speed or speeds is determined by the input speed to the gear unit divided by its gear ratio. Their relationship is described by the following formulas.

$$i \text{ (gear ratio)} = \frac{\text{Input speed [rpm]}}{\text{Output speed [rpm]}}$$

$$\text{Output speed [rpm]} = \frac{\text{Input speed [rpm]}}{i \text{ (gear ratio)}}$$

To specify a gear unit, you can identify either gear ratio needed or the output speed (rpm) if the input speed is known.

2. Power and Torque

The second step for selecting a gear unit is the required power or torque needed to power the load. Torque in this catalog is normally expressed in pound-inches [lb-in].

$$\text{Power [hp]} = \frac{\text{Torque [lb-in] x speed [rpm]}}{63025}$$

$$\text{Torque [lb-in]} = \frac{\text{Power [hp] x 63025}}{\text{speed [rpm]}}$$

For a proper selection you must ensure that the motor or other prime mover can produce enough torque or power and that the gear unit has adequate torque or power capacity. You must also consider if the power or torque is specified at the input or output of the gear unit. The Helical-worm gear units have lower efficiency than in-line or bevel gear units, therefore helical-worm products efficiency may need to be considered in the selection.

To specify a gear unit you can identify either torque or power.

3. Service Factor or Service Class

In addition to power or torque, service factor must also be considered. A service factor is essentially the ratio of extra capacity in a gear unit compared to the power or torque that is needed to run that application. The goal of selecting a gear unit with extra capacity (service factor) is to provide adequate service life in operation.

One reason to apply a larger service factor is if a unit operates more hours per day. If a unit runs 24 hours per day it should normally have a higher service factor than a unit that runs 8 hours per day if you expect the same calendar life.

A second reason for applying a larger service factor is to cope with a more difficult application. Even if it takes the same power and speed to operate a rock crusher as a fan, the rock crusher needs a stronger gearbox (higher service factor) to give the same calendar operating life as the gear unit powering the fan.

The real question is how to determine the proper service factor for a gear unit in an application. Following are four possible methods.

Customer or User Specification

Many customers will have their own service factor guidelines or specifications.

AGMA Service Factoring

American Gear Manufacturers Association (AGMA) publishes lists of recommended service factors for different applications. These service factor recommendations have been determined form the experience of many gear manufactures and are in AGMA standard 6010. See page 68 for additional detail.

AGMA Service Classes

American Gear Manufactures Association (AGMA) has another method for selecting gear units service factors. AGMA standard 6009 lists many applications by a service class (I, II, III) with class I being the simplest applications and class III being the hardest. These application service classes are associated with a range of service factors by the following table.

AGMA Service Class	Service Factor
I	1.00 to 1.39
II	1.40 to 1.99
III	2.00 and above

In the gearmotors selection table each unit is also classified by an AGMA service class. See page 64 for additional detail.

Selection Information

NORD Mass Acceleration Service Factoring

NORD often uses a calculation based system to properly assign a service factor. This system considers hours of operation per day, the severity of the application and the number of times the equipment is cycled. See page 62 for additional detail.

4. Gearbox Type & Input

NORD gear drives are available in a number of mechanical configurations including:

- Helical in-line
- Clincher™ shaft mount
- Right-angle helical-bevel
- Right-angle helical-worm

NORD's modular design allows for a number of different inputs to be added to NORD reducers including:

- Integral motor
- NEMA-C and IEC motor adapter
- Solid input shaft
- Servo motor adapter
- Sugar scoop mount
- Top motor mount platform
- NORDISC™ variable speed friction drives
- Titan™ variable speed belt boxes

5. Mounting Position

The gearbox mounting position is an important and often overlooked specification. The mounting position determines how much oil the gear reducer requires, in addition to determining the position of the oil drain, oil fill and vent on the gear drive. NORD offers six basic mounting positions. If your application requires a variation from the six basic mounting positions, please contact NORD.

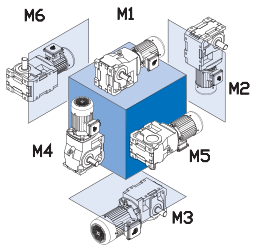

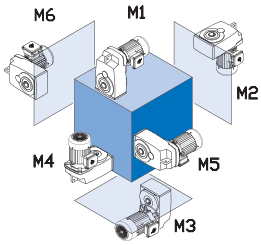

Many gearbox and motor options require a location designation. For example a right-angle helical-bevel unit with a single solid shaft extension requires a shaft extension side location. Please see page 18 for additional options that require location designation.

6. Options

NORD offers a number of mechanical, protective, paint and lubrication options for gear reducers and motors. Please see pages 19 for gear unit options and refer to the motor section (Section G) for motor options.

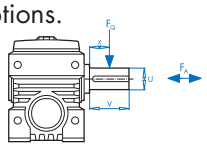

7. Checks

Overhung Load

An overhung or radial load exists when a force is applied at right-angles to a shaft beyond the shaft's outermost bearing. Pulleys, sheaves and sprockets will cause an overhung load when used as a power take-off. The amount of overhung load will vary, depending on the type of power take-off used and where it is located on the shaft.

Overhung load [FQ] can be found in the gearmotor rating tables and input shaft overhung load ratings [FQ1] can be found on pages 52 - 59. Overhung load capacities should not exceed the values in the table to ensure long bearing life. Overhung load capacities are to be applied at the midpoint of the shaft extension and without thrust loads.

To calculate overhung load see page 52.

Thrust Loads (Axial)

Loads that are directed towards or away from the gearbox along the axis of the shaft are called thrust or axial loads. Output shaft thrust capacity [FA] can be found in the gearmotor rating tables. Input shaft capacity [FA1] can be found on pages 52. Thrust load capacities should not exceed the values listed in the tables to ensure long bearing life. Thrust load capacities are listed for pure axial loads with no overhung load. Contact NORD for combination loads or a more exact examination of the application.

NEMA C-face Motor Weight Limits

When mounting a motor to a NORD NEMA C-face motor adapter it is important to consider the motor's weight. Following is a table that includes the maximum motor weight the NEMA adapter can support. If the motor exceeds the listed weight is must be externally supported. When a C-face mounted motor is externally supported care must be taken to ensure that the support system does not impose additional pre-loads on the NEMA motor adapter.

NEMA Weights

Motor FRAME	56C	143TC	145TC	182TC	184TC
Max Weight [lb]	66	88	110	130	175
Motor FRAME	210TC	250TC	280TC	324TC	326TC
Max Weight [lb]	220	450	550	770	1100
Motor FRAME	365TC				
Max Weight [lb]	1550				

Selection Information

Gear Reducer Ratings

The permissible continuous power limit of gear reducers is limited by both the mechanical rating and the thermal rating. The mechanical rating depends upon the material strength of the gear reducer's gears, bearings, housing, shafts, etc. The mechanical input power limit to the reducer is also a function of the mechanical power rating divided by the relevant reducer service factor.

The thermal rating or thermal limit depends upon the amount heat generated within the reducer and is influenced by a variety of factors including:

- Churning or splashing losses in the lubricant which depend upon reducer type, ratio, input style, mounting position or oil fill-level, and the circumferential travel velocities of the gear wheels.
- The actual speed and load conditions. These factors determine load-dependent losses in the gears and frictional losses in the gears, bearings and seal areas.
- Ambient Conditions:
  - Ambient Temperature.
  - Amount of free air circulation around the drive.
  - Possible near-by heat sources.
  - Heat dissipation or the ability of the reducer to transfer heat through the housing, shafts, and the mating substructure or mounting surface.

Observing the Reducer's Thermal Limit

When to Contact NORD

Through computer program analysis NORD can evaluate application conditions and the impact they have on a reducer's thermal capacity.

When applying helical in-line, Clincher™ shaft mount, and helical-bevel gear units of case sizes 6 and larger (SK62, SK6282 and SK9072.1 and larger), consult NORD if any two or more of the following conditions apply:

- Gear ratio, $i_{total} \leq 24:1$ or $\leq 48:1$ for helical-bevel units
- Input power, $P_1 \geq 60$ hp (45 kw)
- Input speed, $n_1 > 1800$
- Vertical positioning (mounting position M2 or M4)
- Input configuration: NEMA C-face, IEC, servo adapter or solid-shaft input (Type-W)
- Elevated ambient temperature ≥ 86° F (30 °C)

When applying helical-worm or worm gear units, please consult NORD if any one of the following conditions applies:

- Input speed, $n_1 > 1800$
- Vertical positioning (mounting position M2 or M4)
- Input configuration: NEMA C-face, IEC, servo adapter or solid-shaft input (Type-W)
- Elevated ambient temperature ≥ 86° F (30 °C)

Advise NORD of any special application considerations:

- Confined space or limited air circulation
- Exposure to other near-by radiant heat sources
- Dirty or dusty environments
- High altitude operation > 3,280 ft (1000 m) a.s.l.

Dangers of Reducer Overheating

The following problems may result when the reducer's thermal capacity or maximum oil sump temperatures are exceeded:

- Lubrication oxidation, breakdown and deterioration.
- A decrease in lubrication viscosity and film thickness.
- Loss of critical bearing and gear clearances required for proper lubrication.
- Increased contact pressures and increased operating temperatures in the critical load zones of the gearing and bearings.
- An increased possibility for metal-to-metal contact and premature component wear.
- A significant reduction in the lubricant's ability to prevent scuffing, pitting, and in extreme cases galling or welding.

Maximum Oil Sump Temperature Limit

To prevent reducer overheating, the reducer's maximum oil sump temperature limit must not be exceeded for prolonged periods of operation (up to 3 hours continuous operation, depending upon reducer size).

Oil Type	Maximum Oil Temperature Limit	
	NORD	AGMA 9005-D94
Mineral	80-85 °C (176-185 °F)	95 °C (203 °F)
Synthetic	105 °C (220 ° F)	107 ° C (225 ° F)

Measures to Expand the Application Range

There are a variety of measures that may be taken in order to protect against thermal overload and expand the application range of the gear reducer. Common examples include the following:

- Recommending a change in lubrication viscosity and/or a specific synthetic lubricant type.
- Applying high-temperature seals.
- Increasing air flow around the gear unit.
- Shielding or protecting the reducer from high heat sources.
- Considering an integral motor instead of the bolt-on input assembly covers. In many cases the motor fan will substantially increase air-flow around the gear unit.
- Add an Oil Expansion/Overflow Chamber (Option "OA") or an Oil Reservoir (Option "OT").
- Oil Cooler (Option "OC").
- Water Cooling Cover (Option "WC")

Clincher™ Shaft Mount Positions & Oil Fill Quantities

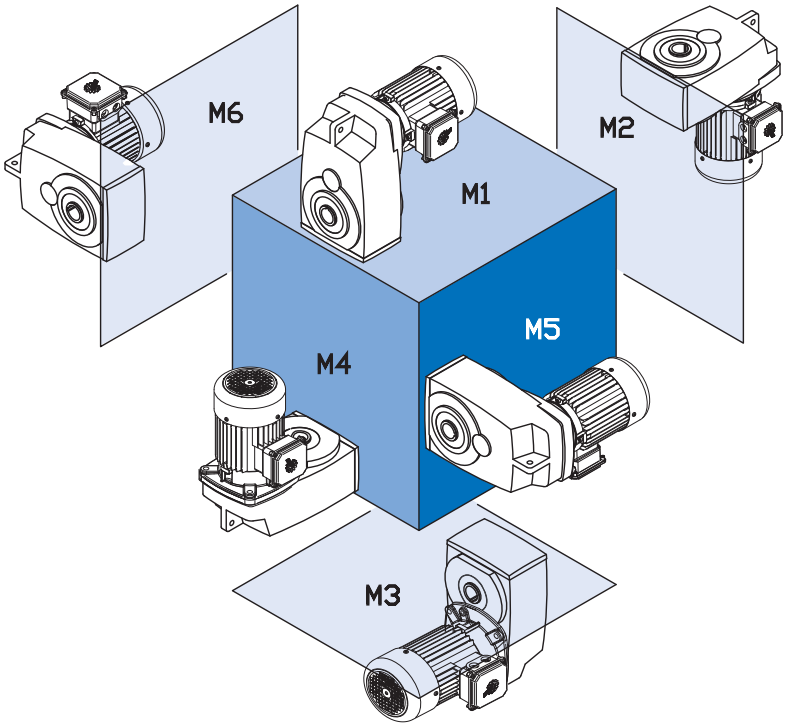

Mounting Position	M1		M2		M3		M4		M5		M6	
	Quarts	Liters	Quarts	Liters	Quarts	Liters	Quarts	Liters	Quarts	Liters	Quarts	Liters
SK0182NB	0.42	0.40	0.58	0.55	0.63	0.60	0.58	0.55	0.37	0.35	0.37	0.35
SK0282NB	0.74	0.70	1.06	1.00	0.85	0.80	1.16	1.10	0.95	0.90	0.95	0.90
SK1382NB	1.37	1.30	2.43	2.30	1.48	1.40	2.22	2.10	2.11	2.00	2.01	1.90
SK1282	0.95	0.90	1.37	1.30	0.95	0.90	1.27	1.20	1.00	0.95	1.00	0.95
SK2282	1.74	1.65	2.54	2.40	2.01	1.90	2.11	2.00	1.90	1.80	1.90	1.80
SK2382	1.80	1.70	2.75	2.60	2.01	1.90	3.28	3.10	1.59	1.50	1.59	1.50
SK3282	3.33	3.15	4.33	4.10	3.44	3.25	4.33	4.10	3.33	3.15	3.33	3.15
SK3382	4.33	4.10	5.18	4.90	3.49	3.30	5.92	5.60	3.49	3.30	3.49	3.30
SK4282	4.97	4.70	6.45	6.10	5.02	4.75	5.71	5.40	4.97	4.70	4.97	4.70
SK4382	6.24	5.90	7.19	6.80	5.18	4.90	8.77	8.30	5.18	4.90	5.18	4.90
SK5282	7.93	7.50	9.30	8.80	7.93	7.50	9.30	8.80	7.61	7.20	7.61	7.20
SK5382	13.2	12.5	12.7	12.0	7.08	6.70	14.8	14.0	8.77	8.30	8.77	8.30
SK6282	18.0	17.0	14.8	14.0	12.7	12.0	18.5	17.5	10.6	10.0	14.8	14.0
SK6382	17.4	16.5	13.7	13.0	10.1	9.60	19.0	18.0	14.8	14.0	13.2	12.5
SK7282	26.4	25.0	22.2	21.0	21.1	20.0	28.5	27.0	16.9	16.0	22.2	21.0
SK7382	23.3	22.0	21.1	20.0	16.9	16.0	26.4	25.0	24.3	23.0	20.1	19.0
SK8282	39.1	37.0	34.9	33.0	31.7	30.0	43.3	41.0	32.8	31.0	32.8	31.0
SK8382	35.9	34.0	33.8	32.0	26.4	25.0	40.2	38.0	37.0	35.0	31.7	30.0
SK9282	78.2	74.0	74.0	70.0	58.1	55.0	76.1	72.0	63.4	60.0	62.4	59.0
SK9382	77.2	73.0	74.0	70.0	47.6	45.0	78.2	74.0	68.7	65.0	63.4	60.0
SK10282*	95.1	90.0	95.1	90.0	42.3	40.0	95.1	90.0	63.4	60.0	86.7	82.0
SK10382*	89.8	85.0	106	100	77.2	73.0	106	100	84.6	80.0	84.6	80.0
SK11282*	174	165	169	160	153	145	206	195	106	100	148	140
SK11382*	169	160	164	155	148	140	222	210	164	155	143	135
SK12382*	169	160	164	155	148	140	222	210	164	155	143	135

* These units shipped without oil

Lubrication

Lubrication Types

Proper gearbox lubrication is essential in order to reduce friction, heat, and component wear. Lubricants reduce heat and wear by inserting a protective "fluid boundary" between mating parts and preventing direct metal to metal contact. Lubricants also help prevent corrosion and oxidation, minimize foam, improve heat transfer, optimize reducer efficiency, absorb shock loads and reduce noise.

Mounting position not only determines the proper fill-level but may also have some effect on final reducer assembly. If considering any mounting positions that are not shown as catalog-standard options, it is critical that the customer consult with NORD prior to ordering. Unless otherwise specified, NORD supplies most all gear units (*) factory-filled with the standard lubrication type and the appropriate amount of lubricating oil.

* Gear units SK10282, SK10382, SK11282, SK11382, SK12382, and SK9096.1 are supplied without oil.

Standard Oil Lubricants

Gear Unit Type	Ambient Temperature	Oil Type	ISO Viscosity	Manufacturer Brand / Type
Helical-Inline, Parallel-Shaft, & Helical-Bevel	-4 to 104 °F (-20 to 40 °C)	MIN-EP	VG 220	Shell / Omala 220 ♦
	-40 to 140 °F (-40 to 60 °C)	PAO	VG 220	Mobil SHC 630 ♦
	23 to 104 °F (-5 to 40 °C)	FG	VG 220	Shell / FM 220 ♦
Helical-Worm	-22 to 122 °F (-30 to 50 °C)	PAO	VG 680	Mobil SHC 636 ♦

Optional Oil Lubricants

Gear Unit Type	Ambient Temperature	Oil Type	ISO Viscosity	Manufacturer Brand / Type
Helical-Inline, Parallel-Shaft, & Helical-Bevel	-31 to 176 °F (-35 to 80 °C)	PAO	VG 460	Mobil SHC 634
	-40 to 77 °F (-40 to 25 °C)	PAO	VG 150	Mobil SHC 629
	-40 to 140 °F (-40 to 60 °C)	FG-PAO	VG 220	Shell / Cassida GL 220
Helical-Worm	-40 to 122 °F (-40 to 50 °C)	FG-PAO	VG 460	Shell / Cassida GL 460

Standard Bearing Grease Lubricants

Grease Type / Thickener	Ambient Temperature	NLGI Grade	Manufacturer Brand / Type
Standard (Li-Complex)	-22 to 140 °F (-30 to 60 °C)	NLGI 2	Shell Albida EP LC2 ♦
High Temp (Polyurea)	-13 to 176 °F (-25 to 80 °C)	NLGI 2	Mobil Polyrex EP 2 ♦
Food-Grade (Al-Complex)	-13 to 104 °F (-25 to 40 °C)	NLGI 2	Mobil Grease FM 222 ♦

♦ Stocked Lubricant

Oil Formulation Codes

MIN-EP	Mineral Oil with EP Additive
PAO	Synthetic Polyalphaolefin Oil
PG	Synthetic Polyglycol Oil
FG	Food-Grade Oil
FG-PAO	Food-Grade, Synthetic Polyalphaolefin Oil

Important Notes

- In worm gears avoid using (EP) gear oils that contain sulfur-phosphorous chemistries, as these additives can react adversely with bronze worm gears and accelerate wear.
- Food grade lubricants must be in compliance with FDA 212 CFR 178.3570 and qualify as a NSF-H1 lubricant. Please consult with lubrication manufacture for more information.
- When making a lubrication change, check with the lubrication supplier to assure compatibility and to obtain recommended cleaning or flushing procedures.
- Do not mix different oils with different additive packages or different base oil formulation types. Polyglycol (PG) oils are not miscible with other oil types and should never be mixed with mineral oil, or Polyalphaolefin (PAO) oil.
- Please Consult NORD if considering cold-temperature oils below an ISO Viscosity VG100 or lower.

Clincher™ Shaft Mount Weights - Reducer

Approximate Weights [lb]

Type	W	56C	140TC	180TC	210TC	250TC	280TC	320TC	360TC
SK 0182 NB	13	22	22	–	–	–	–	–	–
SK 0282 NB	22	31	31	–	–	–	–	–	–
SK 1282	40	51	51	66	–	–	–	–	–
SK 1382 NB	49	57	57	68	–	–	–	–	–
SK 1282/02	57	68	–	–	–	–	–	–	–
SK 2282	77	82	82	90	–	–	–	–	–
SK 2382	79	90	90	–	–	–	–	–	–
SK 2282/02	82	93	–	–	–	–	–	–	–
SK 3282	110	115	115	124	143	–	–	–	–
SK 3382	115	126	126	–	–	–	–	–	–
SK 3282/12	119	130	130	–	–	–	–	–	–
SK 4282	[redacted]	[redacted]	154	170	201	223	–	–	–
SK 4382	176	181	181	190	–	–	–	–	–
SK 4282/12	152	163	163	179	–	–	–	–	–
SK 5282	245	234	234	249	280	302	322	–	–
SK 5382	265	269	269	278	278	–	–	–	–
SK 5282/12	231	243	243	258	–	–	–	–	–
SK 6282	474			448	476	531	531	562	562
SK 6382	423	412	412	428	459	481	481	–	–
SK 6382/22	443	448	448	456	–	–	–	–	–
SK 6382/32	467	472	472	481	501	–	–	–	–
SK 7282	613	–	–	587	615	670	670	701	734
SK 7382	628	–	–	602	631	686	686	717	750
SK 7382/22	604	609	609	618	–	–	–	–	–
SK 7382/32	628	633	633	642	662	–	–	–	–
SK 8282	1061	–	–	869	897	953	953	983	1138
SK 8382	904	–	–	878	906	961	961	992	1025
SK 8382/32	904	908	908	917	–	–	–	–	–
SK 8382/42	959	948	948	964	994	–	–	–	–
SK 9282	1724	–	–	–	–	–	1616	1647	1801
SK 9382	1570	–	–	1645	1572	1627	1627	1658	1813
SK 9382/42	1625	1614	1614	1629	1660	–	–	–	–
SK 9382/52	1689	–	–	1693	1724	1746	1766	–	–
SK 10282	2825	–	–	–	–	–	–	–	3001
SK 10382	2880	–	–	–	–	2871	2871	2902	3056
SK 10382/52	2933	2922	2922	2937	2968	2990	2990	–	–
SK 11282	4558	–	–	–	–	–	–	–	4734
SK 11382	4728	–	–	–	–	4719	4719	4750	4904
SK 11382/52	4780	4769	4769	4785	4816	4838	4838	–	–
SK12382	4728	–	–	–	–	4719	4719	4750	4904

Above weights are approximate. Depending upon ratio, oil quantity and optional equipment, reducer weights may be different than shown. Exact weights can be obtained after the unit is fully asembled.

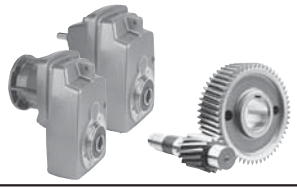

SK 4282
NEMA-C + W
Ratings & Combinations

Model Type	Gear Ratio	Output Speed	Output Torque*	Maximum input power◈ Solid input shafts type "W"				NEMA C-Face* Available Combinations							
	i_{tot}	n_2	$T_{2\,max}$	Input Speed											
		1750 rpm		1750 rpm	1150 rpm	875 rpm	580 rpm								
		[rpm]	[lb-in]	[hp]	[hp]	[hp]	[hp]	56C	140TC	80TC	210TC	250TC	280TC	320TC	360TC
SK 4282	4.70	372	9160	20.00	13.20	10.00	6.60			X	X	X			
	5.00	350	9160	20.00	13.20	10.00	6.60			X	X	X			
	5.43	322	9160	20.00	13.20	10.00	6.60			X	X	X			
	6.06	289	10620	20.00	13.20	10.00	6.60	X	X	X	X	X			
	7.13	245	10638	20.00	13.20	10.00	6.60	X	X	X	X	X			
	8.33	210	11257	20.00	13.20	10.00	6.60	X	X	X	X	X			
	9.23	190	14461	20.00	13.20	10.00	6.60	X	X	X	X	X			
	10.85	161	15045	20.00	13.20	10.00	6.60	X	X	X	X	X			
	12.68	138	15488	20.00	13.20	10.00	6.60	X	X	X	X	X			
	15.20	115	15930	20.00	13.20	10.00	6.60	X	X	X	X	X			
	18.18	96	15930	20.00	13.20	10.00	6.60	X	X	X	X	X			
	21.45	82	14921	19.41	12.81	9.71	6.41	X	X	X	X	X*			
	22.39	78	15036	18.61	12.28	9.30	6.14	X	X	X	X	X*			
	26.25	67	14231	15.13	9.98	7.56	4.99	X	X	X	X	X*			
	26.43	66	15815	16.56	10.93	8.28	5.47	X	X	X	X	X*			
	26.72	65	14160	14.60	9.64	7.30	4.82			X	X				
	32.04	55	15797	13.79	9.10	6.89	4.55			X	X				
	32.34	54	14337	12.28	8.11	6.14	4.05	X	X	X	X	X*			
	36.40	48	12169	9.27	6.12	4.63	3.06			X	X*				
	36.81	48	12390	9.44	6.23	4.72	3.11	X	X	X	X*				
	38.31	46	17700	12.92	8.53	6.46	4.26			X	X*				
	40.74	43	13771	9.40	6.20	4.70	3.10	X	X	X	X*				
	43.65	40	14160	8.99	5.93	4.49	2.97			X	X*				
	45.05	39	14107	8.73	5.76	4.36	2.88	X	X	X	X*				
	52.20	34	16089	8.68	5.73	4.34	2.86			X	X*				
	61.60	28	15877	7.05	4.66	3.53	2.33			X	X*				
	75.39	23	14063	5.13	3.39	2.57	1.69			X	X*				
	76.70	23	14063	5.13	3.39	2.57	1.69	X	X	X					
	90.52	19	14160	4.27	2.82	2.13	1.41	X	X	X*					
	110.78	16	14160	3.59	2.37	1.80	1.19	X	X	X*					
	155.40	11	11284	1.97	1.30	0.98	0.65	X	X*						

* Caution - The motor power may exceed the gear unit's mechanical torque capacity
◈ The mechanical power limit of the solid input shaft type "W" may limit the reducer rating.
All ratings are mechanical. See page 14 for thermal considerations.

lb	W	56C	140TC	180TC	210TC	250TC
SK 4282	165	154	170	170	201	223

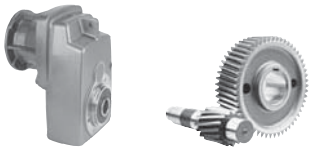

SK 4282 + NEMA

SK 4282V

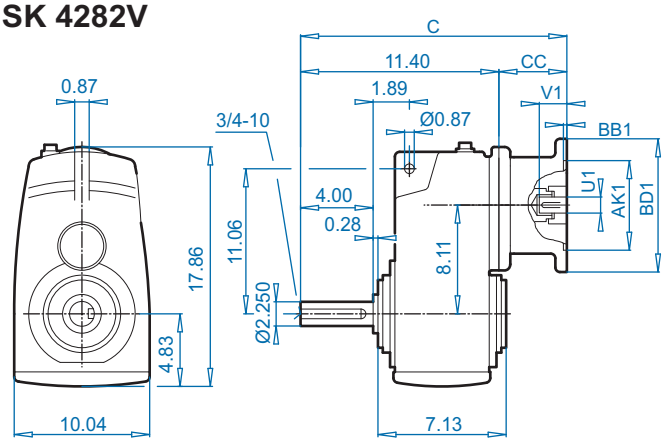

SK 4282A

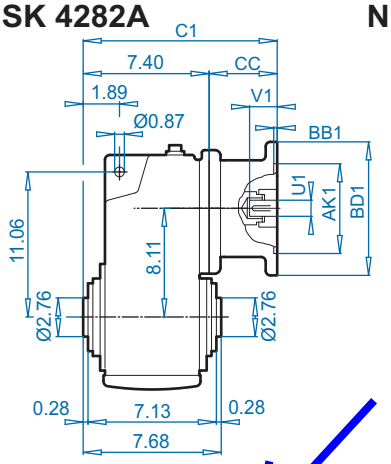

NEMA Input

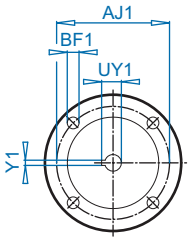

SK 4282VF

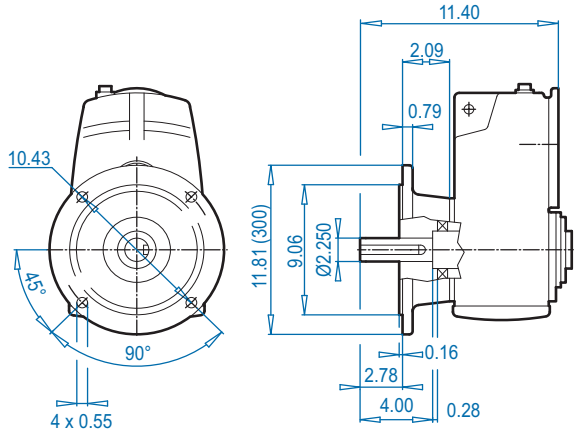

SK 4282AF

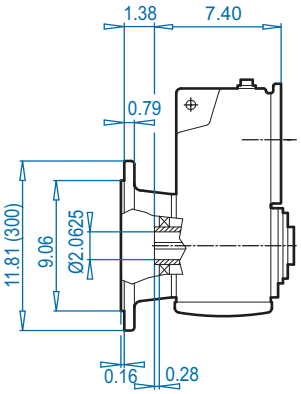

SK 4282ASH

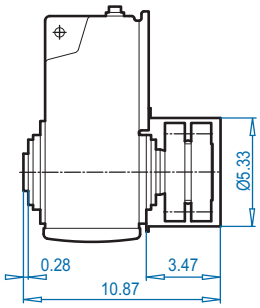

SK 4282V

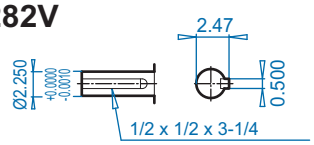

SK 4282A

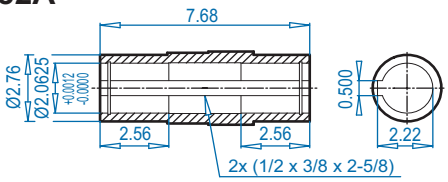

SK 4282AB ⇨📖 394

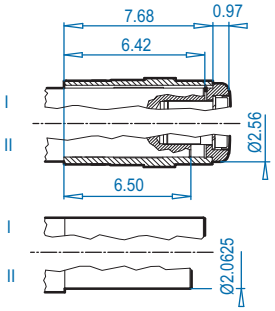

SK 4282AS ⇨📖 391

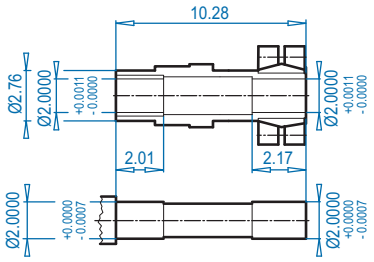

NEMA Dimensions

Type	AJ1	AK1	BB1	BD1	BF1	U1	V1	UY1	Y1	C	C1	CC
56C	5.88	4.500	0.18	6.54	0.43	0.625	2.06	0.71	0.188	15.74	11.74	4.30
140TC	5.88	4.500	0.18	6.54	0.43	0.875	2.12	0.96	0.188	15.74	11.74	4.30
180TC	7.25	8.500	0.23	9.17	0.59	1.125	2.62	1.24	0.250	19.34	15.34	7.90
210TC	7.25	8.500	0.39	9.17	0.59	1.375	3.12	1.52	0.312	19.34	15.34	7.90
250TC	7.25	8.500	0.23	9.17	0.59	1.625	3.75	1.80	0.375	19.34	15.34	7.90

ALTERNATE SHAFTS SEE PAGES 388 - 393

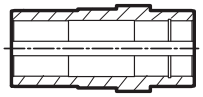

Hollow Shaft Dimensions (AZ-AF-AX)

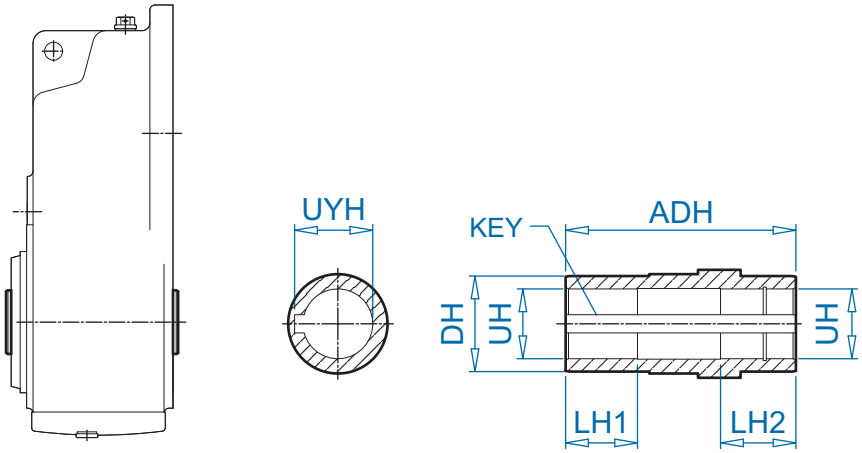

Type	UH	DIAMETER TOLERANCE	ADH	LH1	LH2	DH	UYH	KEY SIZE w x h x l	KEY QTY
SK 0182 NB AZ/AF/AX	0.750*	+0.0010 / -0.0000	3.94	1.18	1.18	1.38	0.84	3/16 x 3/16 x 1-1/2	2
	0.500	+0.0010 / -0.0000	3.94	1.18	1.18	1.38	0.56	1/8 x 1/8 x 1-1/2	2
	25mm	+0.021 / -0.000 mm	100mm	30mm	30mm	35mm	28.3 mm	8 x7 x 40mm	2
SK 0282NB AZ/AF/AX	1.000*	+0.0010 / -0.0000	4.80	1.57	1.57	1.57	1.11	1/4 x 1/4 x 2-1/8	2
	1.1875	+0.0010 / -0.0000	4.80	1.57	1.57	1.57	1.30	1/4 x 1/4 x 2	2
	0.750	+0.0010 / -0.0000	4.80	1.57	1.57	1.57	0.84	3/16 x 3/16 x 1-1/2	2
	25mm	+0.021 / -0.000 mm	122mm	40mm	40mm	40mm	28.3 mm	8 x 7 x 40mm	2
	30mm	+0.021 / -0.000 mm	122mm	40mm	40mm	40mm	33.3 mm	8 x 7 x 40mm	2
SK 1382NB AZ/AF/AX	1.375*	+0.0010 / -0.0000	6.93	1.69	3.15	1.97	1.52	5/16 x 5/16 x 2-1/2	2
	1.4375	+0.0010 / -0.0000	6.93	2.36	2.36	1.97	1.61	3/8 x 3/8 x 2-1/2	2
	1.250	+0.0010 / -0.0000	6.93	2.36	3.15	1.97	1.37	1/4 x 1/4 x 2-1/4	2
	35mm	+0.025 / -0.000 mm	176mm	60mm	80mm	50mm	38.3 mm	10 x 8 x 60mm	2
SK 1282 AZ/AF/AX	1.1875*	+0.0010 / -0.0000	4.80	1.57	1.57	1.77	1.31	1/4 x 1/4 x 1-5/8	2
	1.250	+0.0010 / -0.0000	4.80	1.57	1.57	1.77	1.37	1/4 x 1/4 x 1-5/8	2
	1.000	+0.0010 / -0.0000	4.80	1.57	1.57	1.77	1.11	1/4 x 1/4 x 1-5/8	2
	0.750	+0.0010 / -0.0000	4.80	1.57	1.57	1.77	0.84	3/16 x 3/16 x 1-1/2	2
	30mm	+0.021 / -0.000 mm	122mm	40mm	40mm	45mm	33.3 mm	8 x 7 x 40mm	2
SK 2282 AZ/AF/AX	1.4375*	+0.0010 / -0.0000	5.47	1.97	1.97	1.97	1.61	3/8 x 3/8 x 2	2
SK 2382 AZ/AF/AX	1.500	+0.0010 / -0.0000	5.47	1.97	1.97	1.97	1.61	3/8 x 1/4 x 2	2
	1.375	+0.0010 / -0.0000	5.47	1.97	1.97	1.97	1.52	5/16 x 5/16 x 2	2
	1.250	+0.0010 / -0.0000	5.47	1.97	1.97	1.97	1.37	1/4 x 1/4 x 2-1/8	2
	35mm	+0.025 / -0.000 mm	139mm	50mm	50mm	50mm	38.3 mm	10 x 8 x 42mm	2
SK 3282 AZ/AF/AX	1.625*	+0.0010 / -0.0000	6.85	2.28	2.28	2.17	1.73	3/8 x 1/4 x 2-1/4	2
SK 3382 AZ/AF/AX	1.500	+0.0010 / -0.0000	6.85	2.28	2.28	2.17	1.61	3/8 x 1/4 x 2-1/4	2
	1.4375	+0.0010 / -0.0000	6.85	2.28	2.28	2.17	1.61	3/8 x 3/8 x 2-1/2	2
	40mm	+0.025 / -0.000 mm	174mm	58mm	58mm	55mm	43.3 mm	12 x 8 x 50mm	2
SK 4282 AZ/AF/AX	2.0625*	+0.0012 / -0.0000	7.68	2.56	2.56	2.76	2.22	1/2 x 3/8 x 2-5/8	2
SK 4382 AZ/AF/AX	1.9375	+0.0012 / -0.0000	7.68	2.56	2.56	2.76	2.16	1/2 x 1/2 x 2-3/4	2
	2.000	+0.0012 / -0.0000	7.68	2.56	2.56	2.76	2.22	1/2 x 1/2 x 2-3/4	2
	1.6875	+0.0012 / -0.0000	7.68	2.56	2.56	2.76	1.86	3/8 x 3/8 x 2-1/2	2
	50mm	+0.025 / -0.000 mm	195mm	65mm	65mm	70mm	53.8 mm	14 x 9 x 63mm	2

* standard size

- Dimensions are in inches unless otherwise noted.
- For shaft sizes not shown, consult NORD.

This page intentionally left blank

Enviro-Care
A WAMGROUP® Company

Motor – Auger

This page intentionally left blank

MAX-E1® NEMA PREMIUM

TYPE: AEHE, AEHH8N, AEHH8NCF, AEUH8NDC

EFFECTIVE:01-01-2015
EXPIRES:UFN

APPLICATIONS:

■ **Fans & Blowers**	■ **Compressors**	■ **Any Severe Duty/Petro-Chem**
■ **Pumps**	■ **Mixers**	**Pulp & Paper Application**
■ **Crushers**	■ **Conveyors**	

FEATURES:

- ■ 3/4 - 800 HP
- ■ 1 - 100 HP - Foot Mounted with C-Flange or Round Body C-Flange
- ■ 3600, 1800, 1200, 900 RPM
- ■ Totally Enclosed Fan Cooled (IP54), (IP55 Ratings for Frames Sizes 5000 and larger)
- ■ NEMA Premium Efficient Ratings From 1-500 HP, Denoted Catalog Prefix "EP" - Note (1)
- ■ Department of Energy Efficiency Certificate # CC002A
- ■ 36 Month Warranty from Date of Manufacture
- ■ 3 Phase 60 Hz - 230/460V (Usable on 208V). 150 HP and Larger is 460V Only - Note (2)
- ■ 575V Ratings Available, Denoted by a Catalog Number Suffix of "5" - Note (2)
- ■ 1.15 Service Factor - Continuous
- ■ Class F Insulation with Phenolic Alkyd Resin Varnish
- ■ Class B Temperature Rise
- ■ NEMA Design B Torques as a Minimum, Design C motors are denoted with a subscript "C"
- ■ Oversized Main Conduit Box Rotatable in 90 Degree Increments - Fully Gasketed with NPT Threaded Entrance - F1 Mounted. F2 Available - See "EXTRAS/OPTIONS" Below
- ■ Fabricated Steel Main Lead Box 5000 Frames and larger, up to 500HP, Premium Efficient are CSA Certified for Class I, Div. 2, and Class 2 Div 2 with Auxilary Plate.
- ■ Fabricated Steel Main Lead Box 5000 Frames and larger, 500HP and above, Epact are CSA Certified for Class I, Div. 2, with Auxilary Plate.
- ■ Designed for 40°C Ambient Temperature and 3300 ft elevation - Note (3)
- ■ CSA Certified for Class 1, Div. 2, Groups B, C, D Temp Code T3C, Non Sparking, Non Static Fan - Note (4)
- ■ Bi-Directional Rotation Except 2-Pole Motors 5000 Frame and Larger which are Uni-directional CCW Facing the Drive-End. See "EXTRAS/OPTIONS" Below if CW Rotation is required.
- ■ Cast Iron Frame, End Brackets, Fan Cover and Main Conduit Box
- ■ Dual Drilled Feet - Longer Frames (i.e. 145T Drilled also for 143T) through 449T frames only - Note (5)
- ■ 1045 Carbon Steel Shaft
- ■ Aluminum Die Cast Squirrel Cage Rotor Construction for Frames 5011 and Smaller. Copper/Copper Alloy Rotor Construction for 5800 - 6800 Frames
- ■ Paint System: Phenolic Rust Proof Base Plus Polyurethane Top Coat
- ■ Paint Color: Light Gray - Munsell N5.0
- ■ Vacuum De-Gassed Re-Greasable Ball Bearings (or Roller type) on 280TS Frames and larger with Polyrex EM Grease
- ■ Double Shielded Bearings on Frames 140T-280T Pre-Packed with Multemp SRL Grease.
- ■ Automatic Grease Discharge Fittings on Frames with Re-Greasable Motors
- ■ Labyrinth Type Metal Flinger on Both Ends for Frames 280TS-6800
- ■ Cast Iron Inner and Outer Bearing Caps for Frames 280TS-6800
- ■ Rubber Flinger on Drive-End for Frames 140T - 280T
- ■ Grounding Terminal Inside Main Box
- ■ Stainless Steel Nameplate
- ■ UL Recognized and CSA Approved for Inverter Duty per NEMA MG1 Part 31 - 300 HP and Below 350 HP and above are Suitable for Inverter Duty Per NEMA MG1Part 31.4.4.2 Note (6)
- ■ Inverter Duty Magnet Wire Capable of Withstanding Voltage Spikes of up to 2200 Volts
- ■ Precautions should be taken to eliminate or reduce shaft currents that may be imposed on the motor by the VFD as stated per NEMA MG1 Part 31.4.4.3.
- ■ Insulated Non-Drive End Bearing on 2-Pole motors 600 HP and larger.
- ■ Speed Ranges: 20:1 VT, 10:1 CT 350 HP and larger are 3:1 CT
- ■ 9 Leads - 5 Hp and Below, 12 Leads 7.5 HP - 125 HP, 6 Leads - 150 HP and Larger
- ■ Breather Drains in both End Brackets for Vertical Mounts.

EXTRAS / OPTIONS:

Please refer to Factory Modification Tabs which show common modifications that can be performed.

NOTES:

(1) NEMA Premium Efficiency levels only applies to 1-500 Hp 3600, 1800 and 1200 RPM.
(2) 208V or the current rating will not appear on the motor nameplate, please see Modification for Nameplate adder. TWMC carries minimal 575V stock, please check availability to ensure required motors are in stock. Ratings may be available from our Canadian Warehouses at a higher price or from our factory with a longer lead time. Pricing and lead time may vary.
(3) Please consult factory for suitablity in higher elevations and higher ambients.
(4) Self Certification applies to 600HP and larger.
(5) EP3006, EP3502 and EP3504 do not have dual drilled feet.
(6) Motor service factor is 1.0 when operated on a VFD.

DATE JAN. 4, 2007	OUTLINE DIMENSIONS	MOTOR TYPE: AEUH8NDC
CAT. #: EPV0022C	3-PHASE INDUCTION MOTOR	FRAME NO. 145TC

Pole	HP	kW	Hz	VOLT	Syn. Speed r/min(rpm)
2	2	1.5	60	230/460	3600

Ins	Rating	Dimension in	Approx Weight	Bearings
F	CONT.	inches	66 LBS	DE: 6205ZZ NDE: 6205ZZ

Totally Enclosed Fan-Cooled Vertical Type. Squirrel-Cage Rotor.

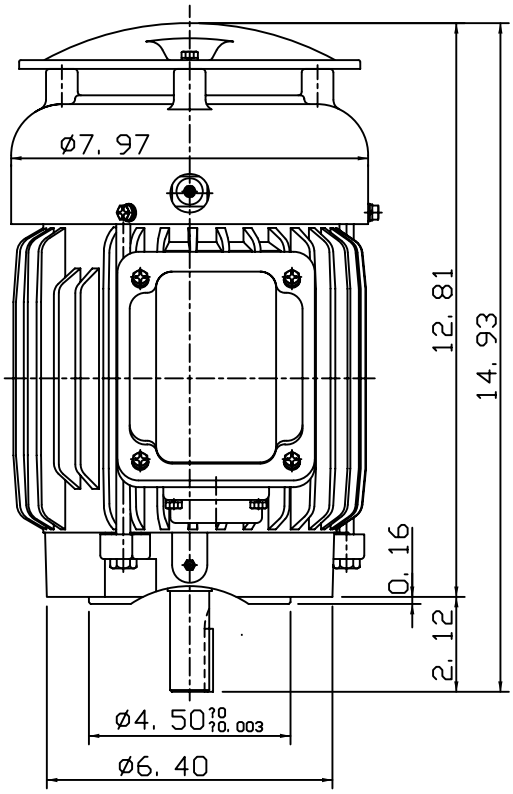

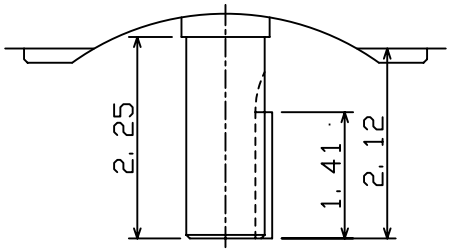

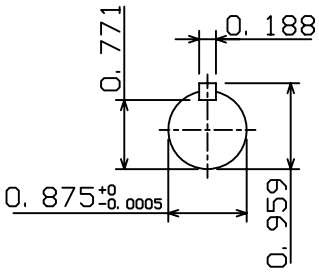

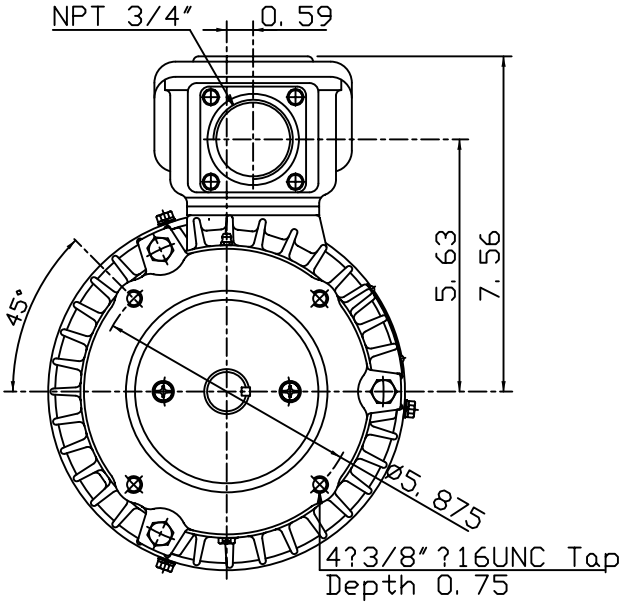

0			

DWN.	J. H. LIANG	12-23-06	TECO Westinghouse	DWG NO.
CHKD.	H. C. YAN	12-28-06		31049M990060
APPD.	M. C. TSAI	12-28-06		

TECO Westinghouse

ISSUED	PERFORMANCE DATA	ENCLOSURE
8/29/2014	3-PHASE INDUCTION MOTOR	TEFC
TYPE: AEUH8NDC		CATALOG#: EPV0022C

NAMEPLATE INFORMATION

OUTPUT HP	OUTPUT KW	POLE	FRAME SIZE	VOLTAGE	HZ	RATED AMBIENT	INS. CLASS	NEMA DESIGN	TIME RATING	SERVICE FACTOR
2	1.5	2	145TC	230/460	60	40°C	F	B	CONT.	1.15

VARIABLE FREQUENCY DRIVE SERVICE

VARIABLE TORQUE			
HZ	HP	RPM	TORQUE (lb-ft)
3~60	0.0003~2	180~3600	0.009~3.031

OHMS/PHASE EQUIVALENT WYE CIRCUIT (AT RATED OPERATING TEMPERATURE 25°C)				
R1	R2	X1	X2	X_m
3.6032	4.4722	6.1885	8.3917	260.73

CONSTANT TORQUE				CONSTANT HORSEPOWER			
HZ	HP	RPM	TORQUE (lb-ft)	HZ	HP	RPM	TORQUE (lb-ft)
6~60	.2~2	360~3600	3.031	60~120	2	3600~7200	3.031~1.516

TYPICAL PERFORMANCE

FULL LOAD RPM	EFFICIENCY FULL LOAD MIN.%	EFFICIENCY FULL LOAD NOM.%	EFFICIENCY 3/4 LOAD %	EFFICIENCY 1/2 LOAD %	POWER FACTOR FULL LOAD %	POWER FACTOR 3/4 LOAD %	POWER FACTOR 1/2 LOAD %	SOUND PRESSURE LEVEL @ 3 FT Db(A)
3465	84	86.5	86.5	85.5	86	80.5	70	61

CURRENTS NO LOAD AT 208 VOLT	NO LOAD AT 230 VOLT	NO LOAD AT 460 VOLT	FULL LOAD AT 208 VOLT	FULL LOAD AT 230 VOLT	FULL LOAD AT 460 VOLT	LOCKED ROTOR AT 208 VOLT	LOCKED ROTOR AT 230 VOLT	LOCKED ROTOR AT 460 VOLT	NEMA KVA CODE LETTER	SAFE STALL TIME IN SECONDS COLD	SAFE STALL TIME IN SECONDS HOT
1.74	2.00	1	5.56	5.03	2.52	45.2	50.0	25	L	17	12

TORQUE FULL LOAD (lb-ft)	TORQUE LOCKED ROTOR %FLT	TORQUE PULL UP %FLT	TORQUE BREAK DOWN %FLT	INERTIA ROTOR WR^2 ($lb\text{-}ft^2$)	INERTIA NEMA LOAD WK^2 ($lb\text{-}ft^2$)	INERTIA MAX ALLOWABLE WK^2 ($lb\text{-}ft^2$)	ACCEL TIME (DOL) NEMA LOAD WK^2 Sec	ACCEL TIME (DOL) MAX ALLOWABLE WK^2 Sec	ALLOWABLE STARTS PER HOUR COLD	ALLOWABLE STARTS PER HOUR HOT
3.03	350	315	390	0.064	2.4	6.5	2.79	7.42	2	1

APPROVED:	M. PRATER	DRAWING NO.	31057EPV0022C	REVISION:	1

DATE: September 13, 2006	CONNECTION DIAGRAM	CATALOG NO.: EPV0022C

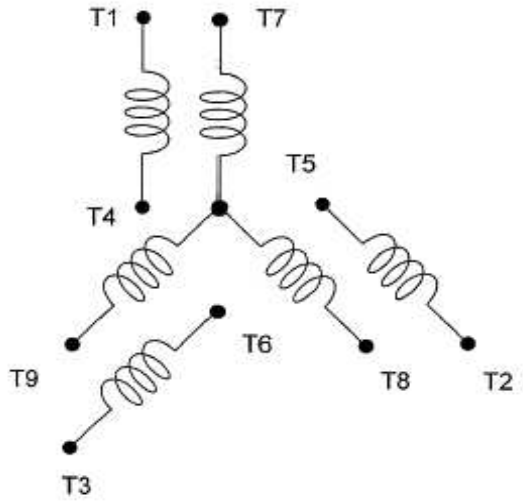

SCHEMATIC - 2Y/Y CONNECTION

ACROSS THE LINE CONNECTION

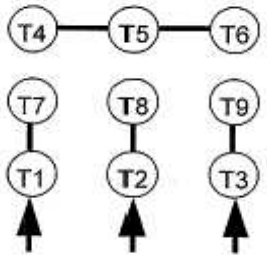

LINE
230 VOLT CONNECTION

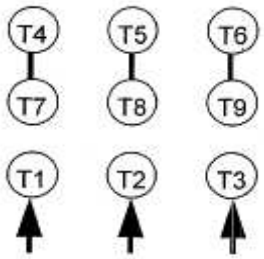

LINE
460 VOLT CONNECTION

TECO Westinghouse	DWG NO. DAC-1566-2

Enviro-Care
A WAMGROUP® Company

Motor Cutout Switch

This page intentionally left blank

Selection diagram

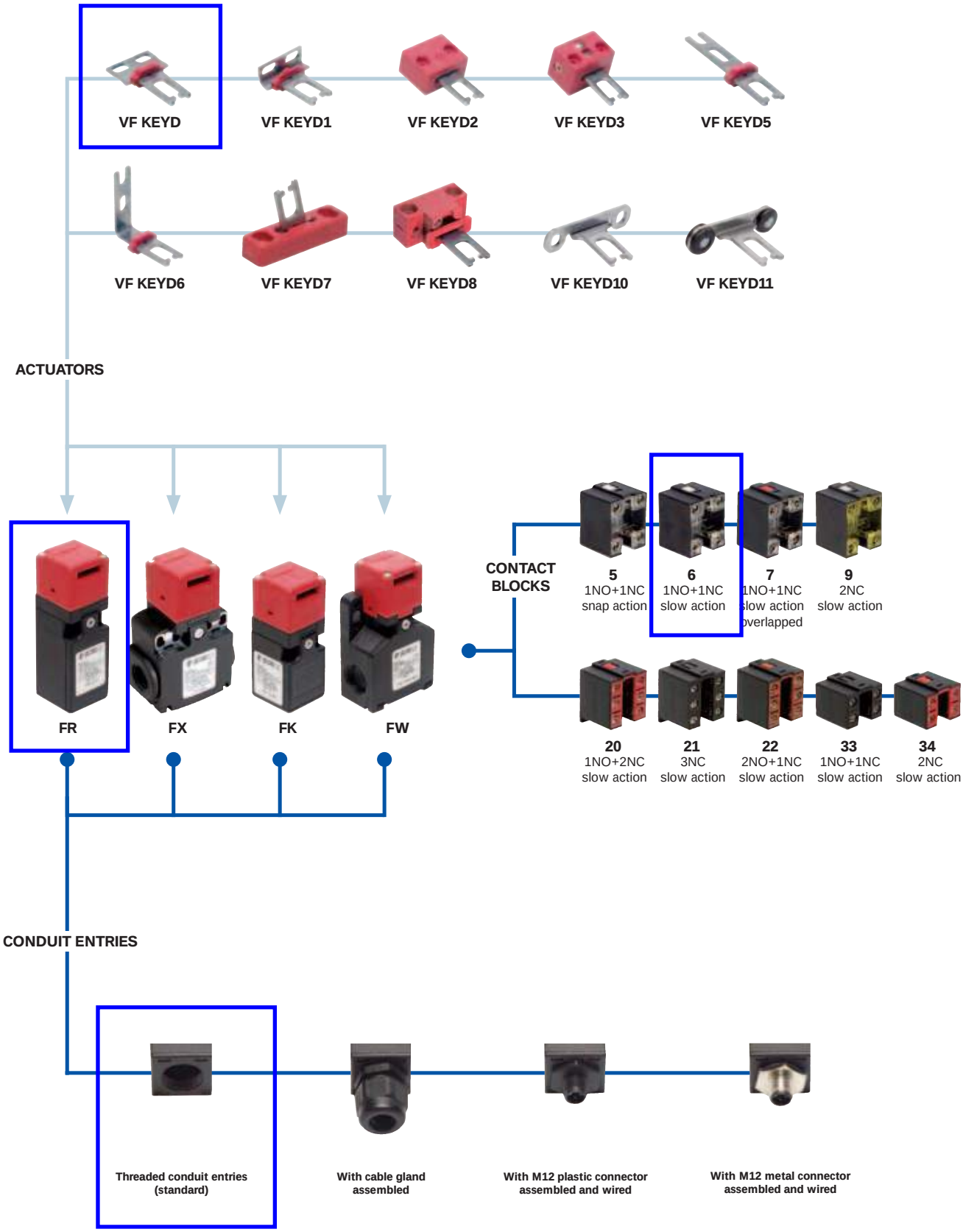

product option

accessory sold separately

Code structure

Attention! The feasibility of a code number does not mean the effective availability of a product. Please contact our sales office.

article — options

FR 693-E3D1XGM2K70

Housing

FR	polymer housing, one conduit entry
FX	polymer housing, two conduit entries
FW	polymer housing, three conduit entries

Contact blocks

5	1NO+1NC, snap action
6	1NO+1NC, slow action
7	1NO+1NC, slow action overlapped
9	2NC, slow action
20	1NO+2NC, slow action
21	3NC, slow action
22	2NO+1NC, slow action
33	1NO+1NC, slow action
34	2NC, slow action

Head type

92	detachable head (only for FW housing)
93	not detachable head (only for FR-FX-FK housing)

Actuator extraction force

	10 N (standard)
E3	30 N

Actuators

	without actuator (standard)
D	with straight actuator
D1	with right-angled actuator
D2	with jointed actuator
...	.....

Preinstalled cable gland or connectors

	no cable gland or connector (standard)
K21	with assembled cable gland suitable for Ø 6 to Ø 12 mm cables range
...	.....
K70	with 4 poles M12 plastic connector
...	.....

For the complete list of all combinations, please contact our technical office.

Threaded conduit entry

	PG 13,5 (standard) (only for FR-FX housing)
A	PG 11 (only for FR-FX housing)
M1	M16x1,5
M2	M20x1,5

Contacts type

	silver contacts (standard)
G	silver contacts gold plated 1 µm

External metallic parts

	zinc-plated steel (standard)
X	stainless steel

article — options

FK 3393-E3D1XGM1K22

Housing

FK	polymer housing, one conduit entry

Contact blocks

33	1NO+1NC, slow action
34	2NC, slow action

Actuator extraction force

	10 N (standard)
E3	30 N

Actuators

	without actuator (standard)
D	with straight actuator
D1	with right-angled actuator
D2	with jointed actuator
...	.....

Preinstalled cable gland

	no cable gland (standard)
K22	with assembled cable gland suitable for Ø 5 to Ø 10 mm cables range
K26	with assembled cable gland suitable for Ø 3 to Ø 7 mm cables range

Threaded conduit entry

	PG 11 (standard)
M1	M16x1,5

Contacts type

	silver contacts (standard)
G	silver contacts gold plated 1 µm

External metallic parts

	zinc-plated steel (standard)
X	stainless steel

Patented

Main data

- Polymer housing, from one to three conduit entries
- Protection degree IP67
- 9 contact blocks available
- 8 stainless steel actuators available
- M12 assembled connector versions
- Silver contacts gold plated versions

Markings and quality marks:

Approval IMQ:	EG610
Approval UL:	E131787
Approval CCC:	2007010305230013 (FR-FX-FK series)
Approval EZU:	1010151

Technical data

Housing

Made of glass-reinforced polymer, self-extinguishing, shock-proof thermoplastic resin and with double insulation ⧈
FR and FK series one conduit entry
FX series two conduit entries
FW series three knock out conduit entries

Protection degree:	IP67 according to EN 60529 (electrical contacts)

General data

Safety parameters:	see page 6/32
Ambient temperature:	from -25°C to +80°C

Version for operation in ambient temperature from -40°C to +80° C on request

Max operating frequency:	3600 operations cycles[1]/hour
Mechanical endurance:	1 million of operations cycles[1]
Max actuating speed:	0,5 m/s
Min. actuating speed:	1 mm/s
Actuator extraction force	10 N (30 N -E3 version)
Driving torque for installation:	see pages 6/1-6/10

(1) One operation cycle means two movements, one to close and one to open contacts, as foreseen by EN 60947-5-1 standard.

Cross section of the conductors (flexible copper wire)

Contact blocks 20, 21, 22, 33, 34:	min.	1 x 0,34 mm²	(1 x AWG 22)
	max.	2 x 1,5 mm²	(2 x AWG 16)
Contact blocks 5, 6, 7, 9:	min.	1 x 0,5 mm²	(1 x AWG 20)
	max.	2 x 2,5 mm²	(2 x AWG 14)

In conformity with standards:
IEC 60947-5-1, EN 60947-5-1, IEC 60204-1, EN 60204-1, EN 1088, EN ISO 12100-1, EN ISO 12100-2, IEC 60529, EN 60529, NFC 63-140, VDE 0660-200, VDE 0113, CENELEC EN 50013, BG-GS-ET-15.
Approvals:
IEC 60947-5-1, UL 508, GB14048.5-2001

In conformity with requirements requested by:
Low Voltage Directive 2006/95/EC, Machinery Directive 2006/42/EC and Electromagnetic Compatibility 2004/108/EC.
Positive contact opening in conformity with standards:
IEC 60947-5-1, EN 60947-5-1, VDE 0660-206.

⚠ **If not expressly indicated in this chapter, for the right installation and the correct utilization of all articles see requirements indicated from page 6/1 to page 6/10.**

	Electrical data		Utilization categories
without connector	Thermal current (Ith):	10 A	Alternate current: AC15 (50...60 Hz)
	Rated insulation voltage (Ui):	500 Vac 600 Vdc 400 Vac 500 Vdc for contact blocks 20, 21, 22, 33, 34	Ue (V) 250 400 500 Ie (A) 6 4 1 Direct current: DC13
	Conditional shot circuit current:	1000 A according to EN 60947-5-1	Ue (V) 24 125 250
	Protection against short circuits:	fuse 10 A 500 V type aM	Ie (A) 6 1,1 0,4
	Pollution degree:	3	
with 4 poles M12 connector	Thermal current (Ith):	4 A	Alternate current: AC15 (50...60 Hz) Ue (V) 24 120 250
	Rated insulation voltage (Ui):	250 Vac 300 Vdc	Ie (A) 4 4 4
	Protection against short circuits:	fuse 4 A 500 V type gG	Direct current: DC13
	Pollution degree:	3	Ue (V) 24 125 250 Ie (A) 4 1,1 0,4
with 8 poles M12 connector	Thermal current (Ith):	2 A	Alternate current: AC15 (50...60 Hz) Ue (V) 24
	Rated insulation voltage (Ui):	30 Vac 36 Vdc	Ie (A) 2
	Protection against short circuits:	fuse 2 A 500 V type gG	Direct current: DC13
	Pollution degree:	3	Ue (V) 24 Ie (A) 2

Description

These safety switches are ideal to control gates, sliding doors and other guards protecting dangerous parts of machine. The stainless steel actuator is fastened to the moving part of the guard, so it is removed from the switch on every opening of the guard. The switch mechanism guarantees that removing the actuator forces the positive opening of the electrical contacts. Easy to install, these switches can be applied to any kind of protection (with hinge, sliding and removable ones). Besides, the possibility to actuate the switch only with its actuator guarantees that the machine can be restarted only when the guard has been closed. All products (except FW series) are equipped with a particular mechanical hooking that does not allow the separation of the head from the body during its positioning.

Rotating heads

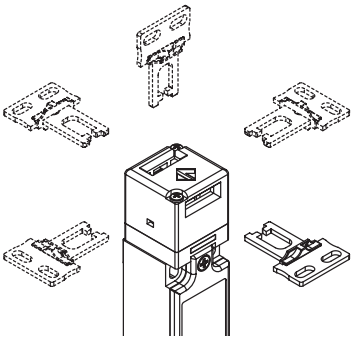

Removing the two fastening screws, in all switches, the head can be rotated in 90° steps.

Actuator regulation zone

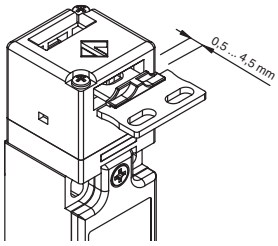

This switch has a wide backlash of the actuator into the head (4 mm) for an easier installation.
With closed door, check that the actuator doesn't knock straight against the head of the switch; it must be in the adjustment zone (0,5…4,5 mm)

Not detachable head

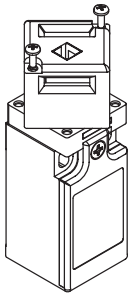

The action head type "93" is completely interchangeable and compatible with previous head type "92", but it has the advantage to be not detachable from the switch body even if it is always adjustable in 90° steps (Pizzato Elettrica patent). The new head is safer because it cannot be ruined during installation. The head fixing screws have been reduced to only two (instead of the previous four) and so the rotation operation will be quicker and cheaper.

Versions with 30 N actuator extraction force

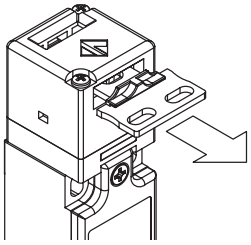

Versions with 30 N actuator holding force instead of the standard 10 N are available.

Installation examples

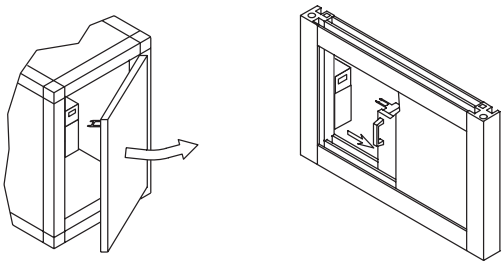

Limits of utilization

Do not use where dust and dirt may penetrate in any way into the head and deposit there, in particular where metal dust, concrete or chemicals are spread.
Do not use where explosive or inflammable gas is present.

Data type approved by IMQ, CCC and EZU

Rated insulation voltage (Ui): 500 Vac
400 Vac for contact blocks 20, 21, 22, 33, 34
Thermal current (Ith): 10 A
Protection against short circuits: fuse 10 A 500 V type aM
Protection degree: IP67
MV terminals (screw clamps)
Pollution degree 3
Utilization category: AC15
Operation voltage (Ue): 400 Vac (50 Hz)
Operation current (Ie): 3 A
Forms of the contact element: Zb, Y+Y, Y+Y+X, Y+Y+Y, Y+X+X
Positive opening of contacts on contact block 5, 6, 7, 9, 20, 21, 22, 33, 34

In conformity with standards: EN 60947-1, EN 60947-5-1 and subsequent modifications and completions, fundamental requirements of the Low Voltage Directive 2006/95/CE and subsequent modifications and completions.

Please contact our technical service for the list of approved products.

Data type approved by UL

Utilization categories Q300 (69 VA, 125-250 Vdc)
A600 (720 VA, 120-600 Vac)
Data of the housing type 1, 4X "indoor use only", 12, 13
For all contact blocks use 60 or 75 °C copper (Cu) conductor and wire size No. 12-14 AWG. Terminal tightening torque of 7,1 lb·in (0.8 Nm).

In conformity with standard: UL 508

Please contact our technical service for the list of approved products.

Dimensional drawings

Contacts type:

- R = snap action
- L = slow action
- LO = slow action overlapped

Contact blocks		polymer housing	polymer housing	polymer housing	polymer housing
		Switch without actuator	Switch without actuator	Switch without actuator conduit entries thread M20x1,5	Switch without actuator
		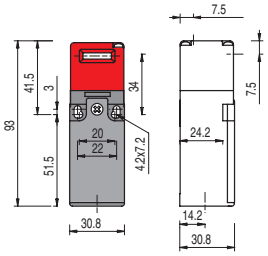	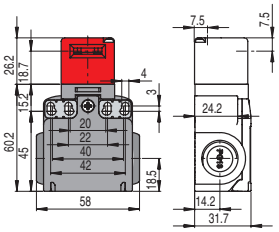	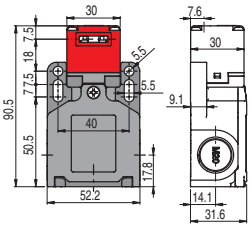	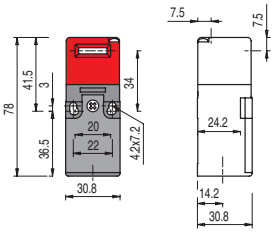
5	R	FR 593 1NO+1NC	FX 593 1NO+1NC	FW 592-M2 1NO+1NC	
		0 6.3 9.3 ∞ 4.6	0 6.3 9.3 ∞ 4.6	0 6.3 9.3 ∞ 4.6	
6	L	FR 693 1NO+1NC	FX 693 1NO+1NC	FW 692-M2 1NO+1NC	
		0 4.7 7.2 ∞ 7	0 4.7 7.2 ∞ 7	0 4.7 7.2 ∞ 7	
7	LO	FR 793 1NO+1NC	FX 793 1NO+1NC	FW 792-M2 1NO+1NC	
		0 6.6 9.1 ∞ 5	0 6.6 9.1 ∞ 5	0 6.6 9.1 ∞ 5	
9	L	FR 993 2NC	FX 993 2NC	FW 992-M2 2NC	
		0 6.5 9 ∞	0 6.5 9 ∞	0 6.5 9 ∞	
20	L	FR 2093 1NO+2NC	FX 2093 1NO+2NC	FW 2092-M2 1NO+2NC	
		0 5.3 7.8 ∞ 5.8	0 5.3 7.8 ∞ 5.8	0 5.3 7.8 ∞ 5.8	
21	L	FR 2193 3NC	FX 2193 3NC	FW 2192-M2 3NC	
		0 5.3 7.8 ∞	0 5.3 7.8 ∞	0 5.3 7.8 ∞	
22	L	FR 2293 2NO+1NC	FX 2293 2NO+1NC	FW 2292-M2 2NO+1NC	
		0 5.3 7.8 ∞ 5.8	0 5.3 7.8 ∞ 5.8	0 5.3 7.8 ∞ 5.8	
33	L	FR 3393 1NO+1NC	FX 3393 1NO+1NC	FW 3392-M2 1NO+1NC	FK 3393 1NO+1NC
		0 5.3 7.8 ∞ 5.6	0 5.3 7.8 ∞ 5.6	0 5.3 7.8 ∞ 5.6	0 5.3 7.8 ∞ 5.6
34	L	FR 3493 2NC	FX 3493 2NC	FW 3492-M2 2NC	FK 3493 2NC
		0 5.3 7.8 ∞	0 5.3 7.8 ∞	0 5.3 7.8 ∞	0 5.3 7.8 ∞
Min. force		10 N (18 N)	10 N (18 N)	10 N (18 N)	10 N (18 N)

All switches listed above are available in the version with 30N actuator extraction force. To obtain these products, the order code has to be changed adding the extension "-E3", for example FR 693-E3.

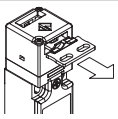

Min. force 30 N version	30 N (38 N)	30 N (38 N)	30 N (38 N)	30 N (38 N)

How to read travel diagrams

All measures in the diagrams are in mm

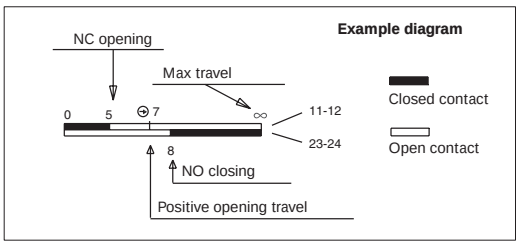

IMPORTANT:
NC contact has to be considered with inserted actuator. **In safety applications** it is necessary to activate the switch **at least up to the positive opening point** indicated in the diagrams with the symbol ⊖. Operate the switch **at least with the positive opening force**, indicated between brackets, below each article, next the value of minimum force.

Accessories See page 5/1

Items with code on the **green** background are available in stock

All measures in the drawings are in mm

Actuators stainless steel

IMPORTANT: These actuators must be used with FR, FX, FK and FW (e.g. FR 693)

Article	Description
VF KEYD	Straight actuator

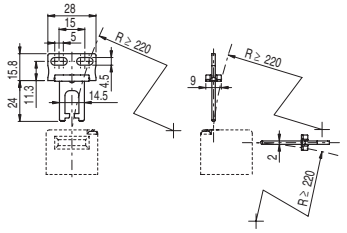

Article	Description
VF KEYD1	Right-angled actuator

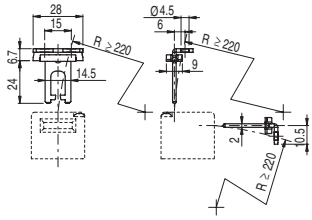

Article	Description
VF KEYD2	Jointed actuator

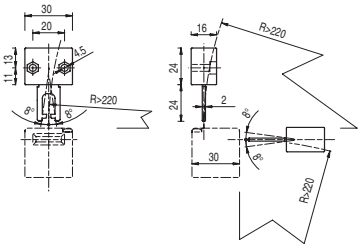

The actuator can flex in four directions for applications where the door alignment is not precise.

Article	Description
VF KEYD3	Jointed actuator adjustable in two directions

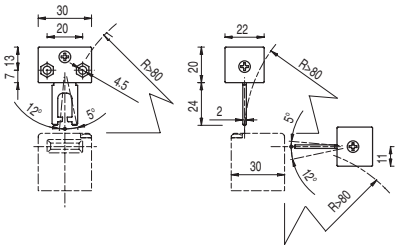

Actuator adjustable in two directions for doors with reduced dimensions.

Article	Description
VF KEYD5	Long actuator

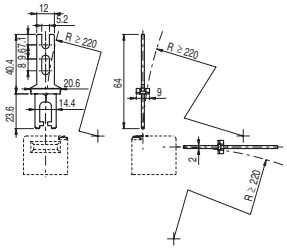

Article	Description
VF KEYD6	Right-angled long actuator

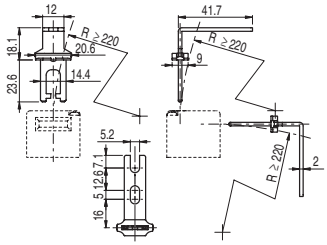

Article	Description
VF KEYD7	Jointed actuator adjustable in one direction

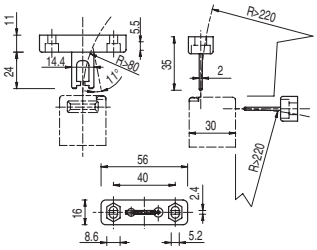

Actuator adjustable in one direction for doors with reduced dimensions.

Article	Description
VF KEYD8	Universal actuator

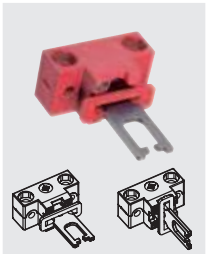

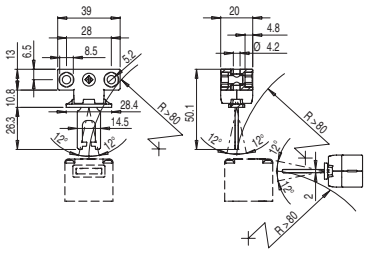

Joined and two directions adjustable actuator for doors with reduced dimensions. The actuator has two couples of fixing holes and it is possible to rotate the actuator-working plan (see picture).

Article	Description
VF KEYD10	Shaped actuator

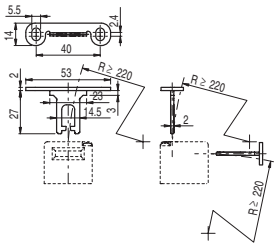

Article	Description
VF KEYD11	Shaped actuator

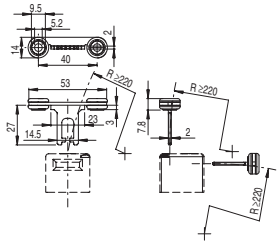

Enviro-Care
A WAMGROUP® Company

Conductivity Rod

This page intentionally left blank

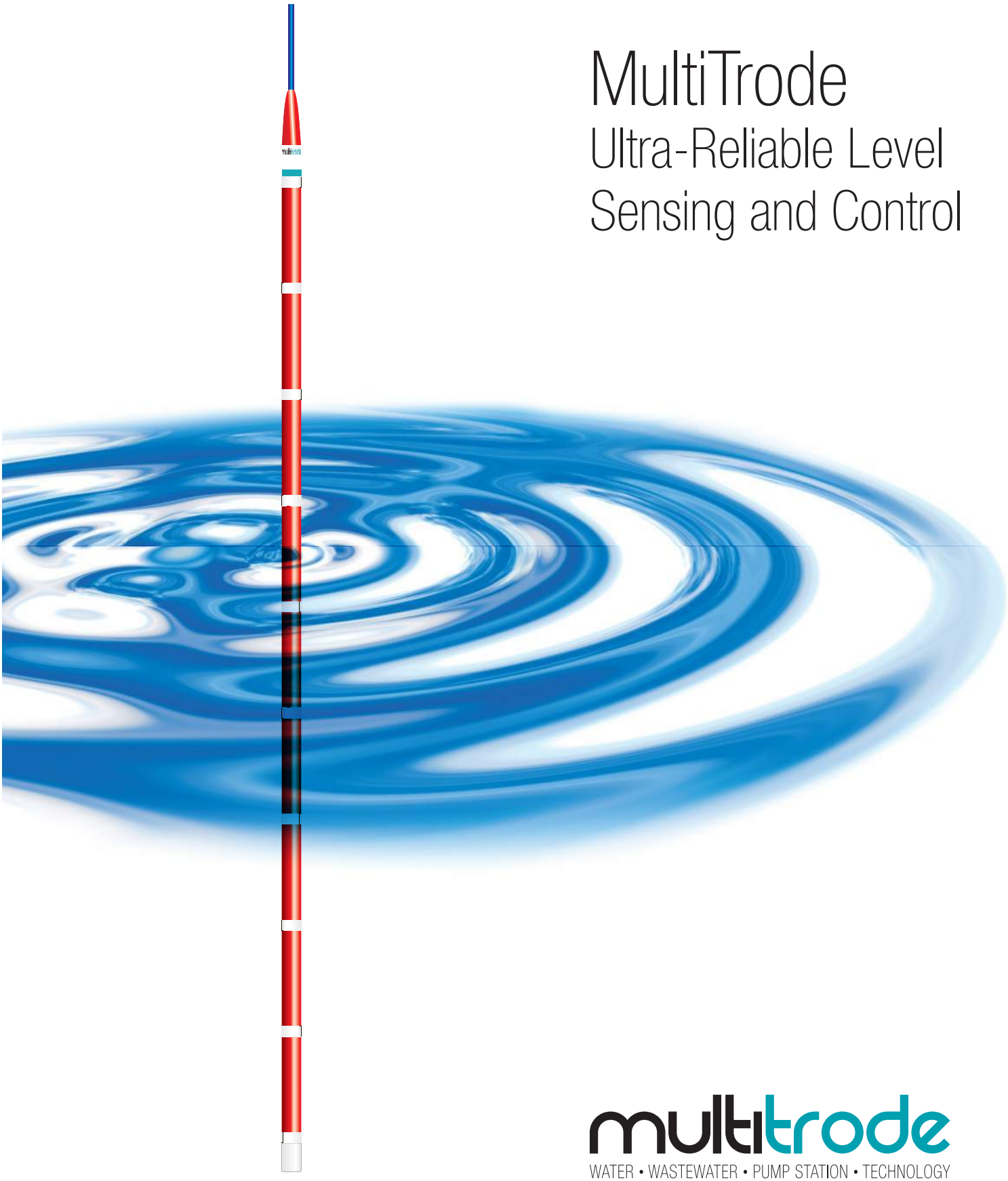

MultiTrode

Ultra-Reliable Level Sensing and Control

multitrode

WATER • WASTEWATER • PUMP STATION • TECHNOLOGY

The Probe... Dip it. Set it. Leave it.

Why is it easier to install than other level devices?

All you do is hang the Probe on its own cable into your wet well, using the bracket we supply. Installation is simple - any one of your technicians could do it in an hour or so. What's more, you install the Probe relatively low down in the wet well, so compared to ball floats it allows the well to be cleaned out more thoroughly. That means less debris build-up, odors and pump clogs.

MTISB Intrinsically Safe Barrier

The MTISB is used between MultiTrode Probes and control equipment. It eliminates the risk of dangerous energy entering the potentially explosive environment where the Probe is located. 5-channel (MTISB5) and 10-channel (MTISB10) barriers available.

MultiTrode's Probe is the most reliable and cost-effective level sensor available in the water and wastewater industry today.

- 10+ year lifetime
- Cost effective and virtually maintenance free
- Very low and reliable pump cut-out
- Unaffected by build up (fat, grease, sludge and foam)
- Reduces maintenance cost
- Intrinsically safe when installed with MTISB barrier
- Eliminates false readings
- Simple to install and maintain
- Cuts the risk of spills
- UL, ULC, CTick, and CE Approved

Why is it so Reliable?

There are no electronics and no moving parts - which results in a long lifetime. **That's why it gets a 10-year warranty!**

How would your Ultrasonic hold up to this application?

The MultiTrode Probe is unaffected by fat, foam, grease and sludge.

How does it work?

The Probe works by using the conductive properties of the water itself to complete a circuit with a controller. It's mounted near the inflow, allowing the turbulence to keep it clean. Even if a build-up does occur it's usually conductive (in wastewater) and so the Probe keeps right on working.

If cleaning is required the Probe is simply pulled through a squeegee that is part of the mounting bracket.

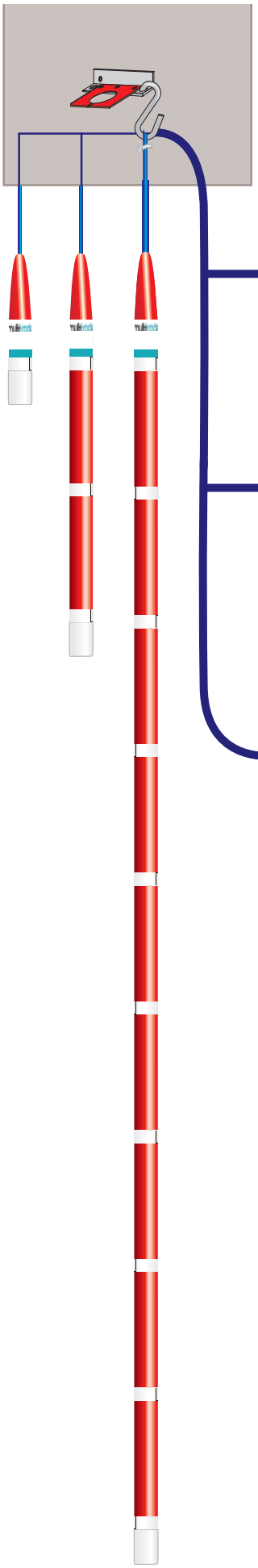

The Probe Connects To:

SCADA System

MultiSmart Pump Station Manager

Full control and monitoring with SCADA connectivity – please see the MultiSmart brochure for details.

MTIC with
10 Probe Inputs

MTDPC with
10 Probe Inputs

MTR with
2 Probe Inputs

MTRA with
3 Probe Inputs

Safe-TL or Safe-FS with
3 Probe Inputs
Includes thermal/seal motor protection

Ordering Information and Examples

Model Code	Probe Length	Number of Sensors	Sensor Separation
0.2 / 1-xx	8in / 0.2m	1	N/A
0.5 / 3-xx	16in / 0.5m	3	6in / 150mm
1.0 / 10-xx	40in / 1.0m	10	4in / 100mm
1.5 / 10-xx	60in / 1.5m	10	6in / 150mm
2.0 / 10-xx	80in / 2.0m	10	8in / 200mm
2.5 / 10-xx	96in / 2.5m	10	10in / 250mm
3.0 / 10-xx	115in / 3.0m	10	12in / 300mm
6.0 / 10-xx	224in / 6.0m	10	24in / 600mm
9.0 / 10-xx	368in / 9.0m	10	35in / 900mm

xx = 10 (for 33ft or 10m of cable); or 30 (for 100ft or 30m of cable)

Probes are supplied with a standard length of cable in either 33ft / 10m or in 100ft / 30m lengths. The Probe comes in sizes ranging from 8 inches to 30 feet. It is available with 1-sensor, 3-sensors or 10-sensors.

2.5 / 10 -10

Probe Length (meters)	Sensor Points	Cable Length (meters)
2.5	10	10

In the complicated world of water and wasterwater management, there is good reason why MultiTrode stands unrivalled amongst its peers: We are committed to a singular vision of developing the latest technological advancements to provide sophisticated solutions to every day challenges in the water and wastewater industries.

Key to our success is the importance we place on customer satisfaction and solution-based products to save you time and money. From pump station management systems to engineering support, MultiTrode encompasses it all. By investing heavily in R&D, we remain on the cutting edge of technology and always ahead of our competitors.

Our products are proven. Our results are tangible. MultiTrode is unrivalled.

MTCAT 7.3

MultiTrode, Inc - USA
990 South Rogers Circle, Suite 3
Boca Raton, Florida 33487
Tel: 561.994.8090 Fax: 561.994.6282
USsales@multitrode.com

MultiTrode - UK
Unit 5 Kingswood Court
Longmeadow
South Brent
Devon TQ10 9YS
Tel: +44 1752 547355 Fax: +44 1752 894615
UKsales@multitrode.com

MultiTrode Pty Ltd - Australia
Brisbane Technology Park
18 Brandl Street
Eight Mile Plains
Queensland 4113
Tel: +61 7 3340 7000 Fax: +61 7 3340 7077
AUsales@multitrode.com

MULTITRODE® and MULTISMART® are registered trademarks of MultiTrode Pty Ltd in Australia, USA, and Europe. Designs registered for the MultiSmart Pump Controller Remote and Base Modules in Australia, USA, Europe and China. Patents pending in Australia, USA, and Europe.

©2012 MultiTrode, Inc.
This publication is protected by copyright. No part of this publication may be reproduced by any process, electronic or otherwise, without the express written permission of MultiTrode Pty Ltd.

We Provide Environmentally Responsible Solutions

multitrode
WATER • WASTEWATER • PUMP STATION • TECHNOLOGY
Visit our website at www.multitrode.com

Enviro-Care
A WAMGROUP® Company

Electrically Actuated Ball Valve – 1”

This page intentionally left blank

DURAVALVE
ELECTRIC ACTUATORS

DuraValve, Inc.

DURAVALVE ELECTRIC ACTUATORS

Features and Specifications

FEATURES

- **10 sizes**
- **Torque:** 100-5000 In-Lbs.
- **Enclosures:**
  NEMA 4 Watertight Standard
  NEMA 7 Explosion Proof Optional
- **Materials:**
  Enclosure - Cast aluminum with a thermally bonded polyester powder coating.
  Output Shaft - Stainless Steel
  Fasteners - Stainless Steel
- **Voltages:**
  115 VAC, 60 Hz, 1 PH. PSC — Standard
  240 and 24 VAC — Optional
  12 and 24 VDC — Optional
  Thermal overload protection — Standard
  Wired for light indication — Standard
- **Limit Switches:**
  Two SPDT, Independently adjustable from 0 to 90 degrees
  15A, 1/2 HP 125, 250 VAC 0.5A, 125 VDC
- **Terminal Strip Connection:** AWG 14
- **Lubrication:** Permanent
- **Installation:** Universal
- **Temperature Limits:**
  -40 degrees F. to 150 Degrees F.
  (Heater required at 0 degees F. and below.)
- **CSA Certified:** Models through 3,840 In-Lbs.

OPTIONAL FEATURES

Voltages, heater-thermostat, additional limit switches, motor brake (required for butterfly valves), extended duty motors.

Note: Not All Options Available On All Models.

SPECIFICATIONS

Actuator Model	Output Torque (in-lb)	Duty Cycles	Standard Motor	90 Deg. Time Sec.	Locked Rotor Current/Amps	Manual Override	ISO-5211 Mtg. Pattern	Approximate Weight lbs.
DR-2A	100	75%	115 VAC, 60Hz, 1 Ph. PSC	2.5	.55	STD. (Except NEMA 7 & DC Motors)	F03/09	5
DR-2B	100	75%	115 VAC, 60Hz, 1 Ph. PSC	2.5	.55	STD. (Except NEMA 7 & DC Motors)	F04/11	5
DSR-5	200	25%	115 VAC, 60Hz, 1 Ph. PSC	5	.75	STD. (Except DC Motors)	F05/14	6
DSX-5	300	25%	115 VAC, 60Hz, 1 Ph. PSC	5	.99	STD. (Except DC Motors)	F05/14	6
DSH-10	400	25%	115 VAC, 60Hz, 1 Ph. PSC	10	.75	STD. NEMA 4 (Optional NEMA 7)	F07/17	13 (NEMA 7 16)
DMR-15	675	25%	115 VAC, 60Hz, 1 Ph. PSC	15	.75	STD. NEMA 4 (Optional NEMA 7)	F07/17	13 (NEMA 7 16)
DML-15	1000	25%	115 VAC, 60Hz, 1 Ph. PSC	15	1.1	STD. NEMA 4 (Optional NEMA 7)	F07/17	13 (NEMA 7 16)
DMH-30	1500	25%	115 VAC, 60Hz, 1 Ph. PSC	30	1.1	STD. NEMA 4 (Optional NEMA 7)	F07/17	13 (NEMA 7 16)
DLA-12	2000	100%	115 VAC, 60Hz, 1 Ph. PSC	12	1.5	STD.	SAE	30
DLX-14	3840	100%	115 VAC, 60Hz, 1 Ph. PSC	14	2.9	STD.	SAE	30
D5K-68	5000	100%	115 VAC, 60Hz, 1 Ph. PSC	68	2.9	STD.	SAE	100

DuraValve, Inc.
847-616-0430 • 800-776-1260 • FAX 847-616-0432 • www.duravalve.com

Dimensional Drawings

~~DR-2A &~~ DR-2B

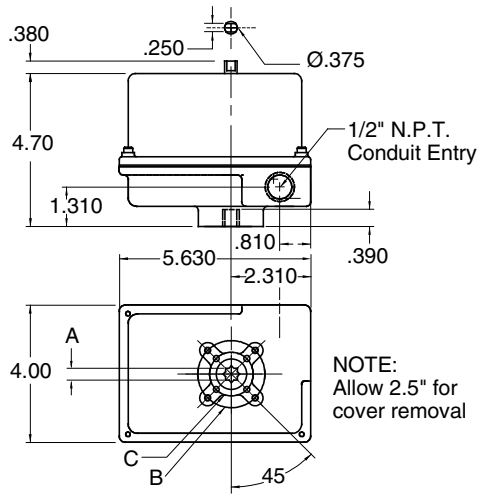

Model	ISO-5211 Mtg. Pattern.	A	B	C
DR-2A	F03	0.354 Star (9mm)	4, M5 TAP 0.44 DP. 1.968 B.C.	4, M5 TAP 0.44 1.417 B.C.
DR-2B	F04	0.433 Star (11mm)	4, M5 TAP 0.44 DP. 2.121 B.C.	4, M5 TAP 0.44 1.653 B.C.

DSH-10, DMR-15, DML-15 & DMH-30

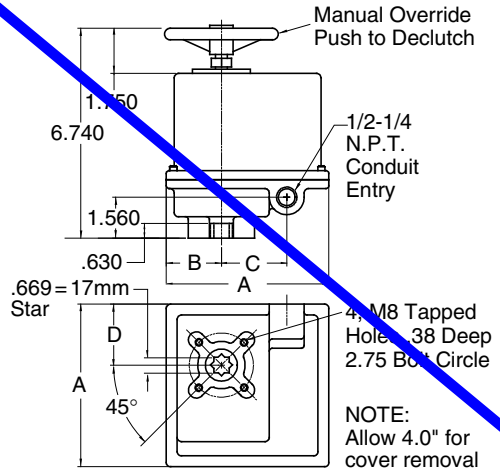

ISO-5211 - F07 Mounting Pattern

Enclosure	A	B	C	D
NEMA 4	7.0	2.30	2.81	2.63
NEMA 7	8.5	3.13	2.81	3.38

Note:
All dimensions in inches unless otherwise specified.

DSR-5 & DSX-5

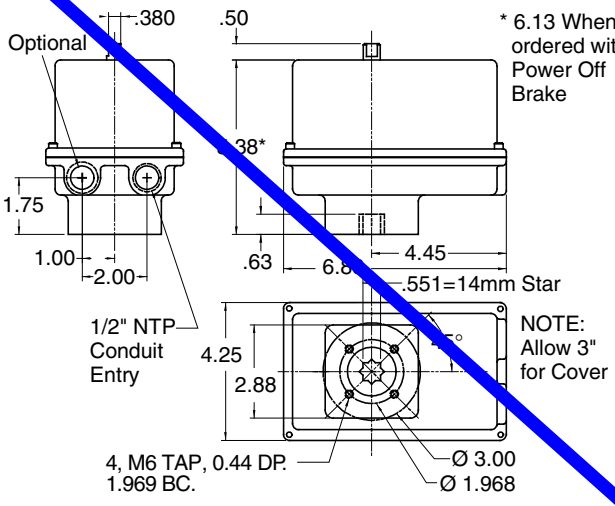

ISO-5211 - F05 Mounting Pattern

DLA-12 & DLX-14

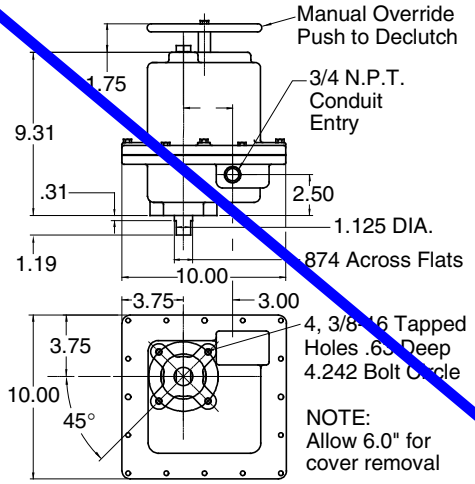

D5K-68

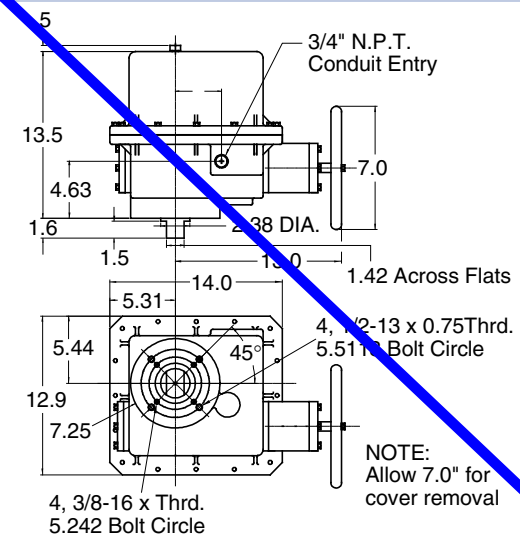

DURAVALVE ELECTRIC ACTUATORS

Wiring Diagrams

TYPICAL WIRING DIAGRAM

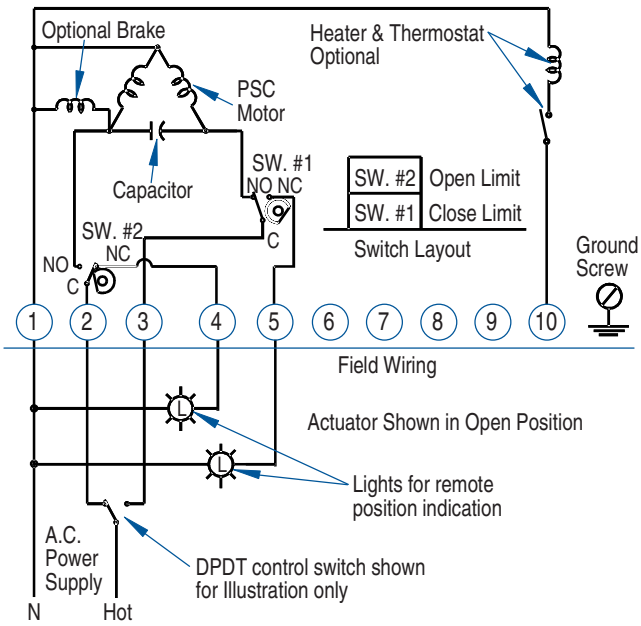

Notes:
Power to terminals 1 & 2 opens valve (CCW rotation).
Power to terminals 1 & 3 closes valve (CW rotation).
Terminals 4 & 5 for light indication.

TYPICAL WIRING DIAGRAM with TWO AUXILIARY SWITCHES

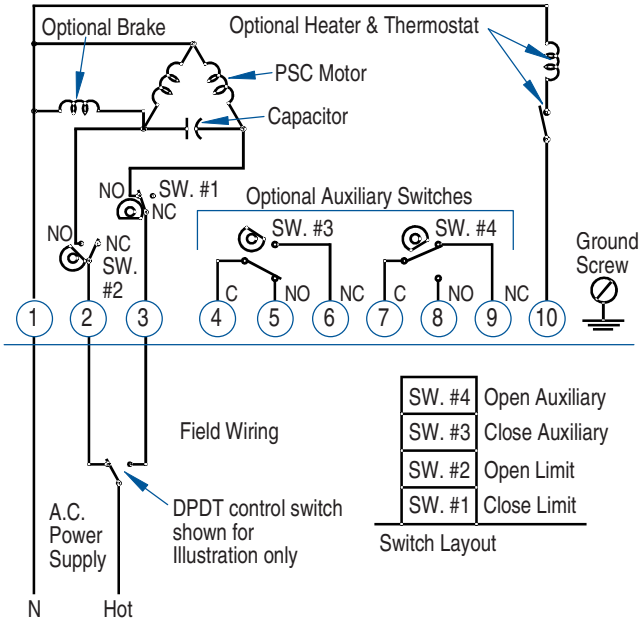

Notes:
Power to terminals 1 & 2 opens valve (CCW rotation).
Power to terminals 1 & 3 closes valve (CW rotation).
Terminals 4 through 9 for auxiliary switch connection.

Wiring diagram illustrates the actuator in the open position
actuators are shipped in the open position unless otherwise specified.

Ordering Information

When ordering please specify:

1. Model
2. Actuator Electrical Requirements
   a) Voltage
   b) Hertz
   c) Phase
3. Enclosure Type
   a) NEMA 4
   b) NEMA 4X
   c) NEMA 7
   d) NEMA 4 & 7
4. Optional Equipment Required

Note: The right is reserved to change or modify product design or construction without prior notice and without incurring any obligation to make such changes or modifications on products previously or subsequently sold.

DVEA 12-06

DuraValve, Inc.

Phone: 847-616-0430
Toll Free: 800-776-1260
FAX: 847-616-0432
www.duravalve.com

DURAVALVE MODEL V4000 BALL VALVE

2-PIECE FULL PORT STAINLESS STEEL

FEATURES AND SPECIFICATIONS

- 1/2" to 3" Sizes
- Maximum Pressure: 1/2" – 1-1/2" Sizes 1000 PSI
  2" Size 800 PSI
  2-1/2" and 3" Sizes 600 PSI
- Temperature Range: -20° F – 400° F
- Blowout Proof Stem
- ISO5211 Direct Mounting Pad
- Adjustable "Live Loaded" Stem Seal
- NPT Threads: ASME B1.20.1
- Optional Latch-Lock Handle

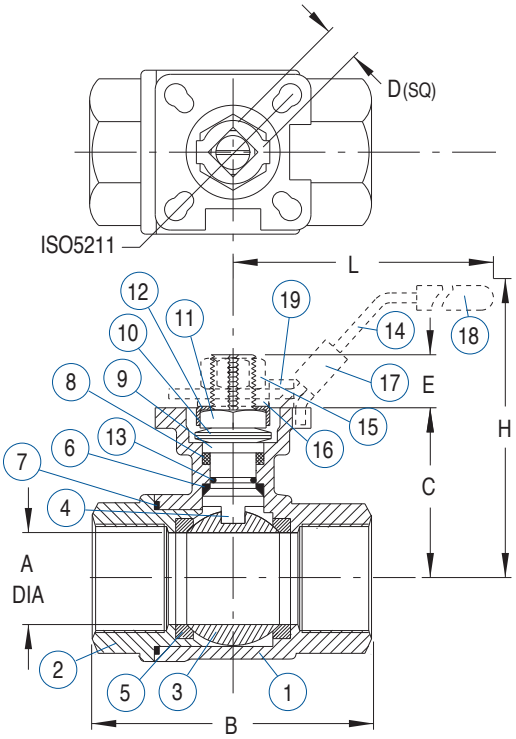

MATERIALS OF CONSTRUCTION

Item	Description	Material	Quantity
1.	Body	CF8M (316SS)	1
2.	Body End	CF8M (316SS)	1
3.	Ball	CF8M (316SS)	1
4.	Stem	316 SS	1
5.	Seat	PTFE	2
6.	Thrust Washer	RTFE	1
7.	Body Seal	PTFE	1
8.	Stem Packing	PTFE	1
9.	Gland Ring	304 SS	1
10.	Bellview Washer	304 SS	2
11.	Adjusting Nut	304 SS	1
12.	Lock Saddle	304 SS	1
13.	O'Ring	Viton®	1
14.	Handle*	304 SS	1
15.	Handle Nut*	304 SS	1
16.	Stem Washer*	304 SS	1
17.	Locking Device*	304 SS	1
18.	Handle Sleeve*	PVC	1
19.	Stop Pin*	304 SS	1

*Handle and associated components optional.

PRESSURE/TEMPERATURE CURVE

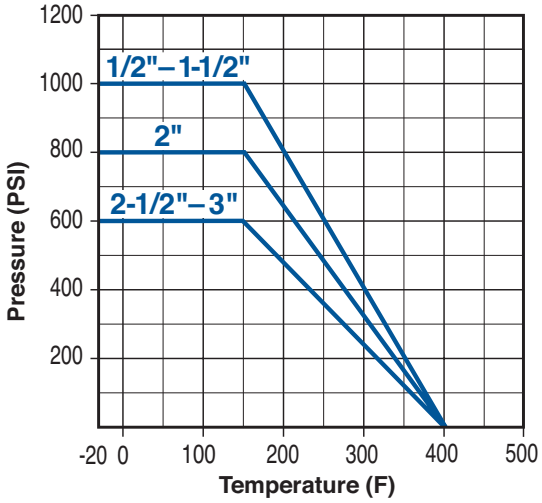

DIMENSIONS IN INCHES

Size	Part No.	A	B	C	D	E	H	L	ISO5211
1/2"	80600C	0.59	2.28	1.49	0.35	0.35	2.35	5.75	F03/F04
3/4"	80600D	0.78	2.56	1.67	0.35	0.35	2.94	5.75	F03/F04
1"	80600E	1.00	3.03	1.77	0.43	0.43	3.05	6.50	F04/F05
1-1/4"	80600F	1.26	3.54	2.03	0.43	0.43	3.30	6.50	F04/F05
1-1/2"	80600G	1.50	3.86	2.34	0.55	0.55	3.73	7.50	F05/F07
2"	80600H	1.97	4.67	2.70	0.55	0.55	4.08	7.50	F05/F07
2-1/2"	80600J	2.52	6.14	3.88	0.67	0.67	5.13	14.50	F07/F10
3"	80600K	3.00	7.32	4.25	0.67	0.67	5.50	14.50	F07/F10

DuraValve, Inc.

847-437-7000 • 800-776-1260 • FAX 847-437-7005 • www.duravalve.com

This page intentionally left blank

Enviro-Care
A WAMGROUP® Company

Solenoid Valve 1" & ½”

This page intentionally left blank

Features

- Wide range of pressure ratings, sizes, and resilient materials provide long service life and low internal leakage
- High flow valves for liquid, corrosive, and air/inert gas service
- Industrial applications include:
  - Car wash
  - Laundry equipment
  - Air compressors
  - Industrial water control
  - Pumps

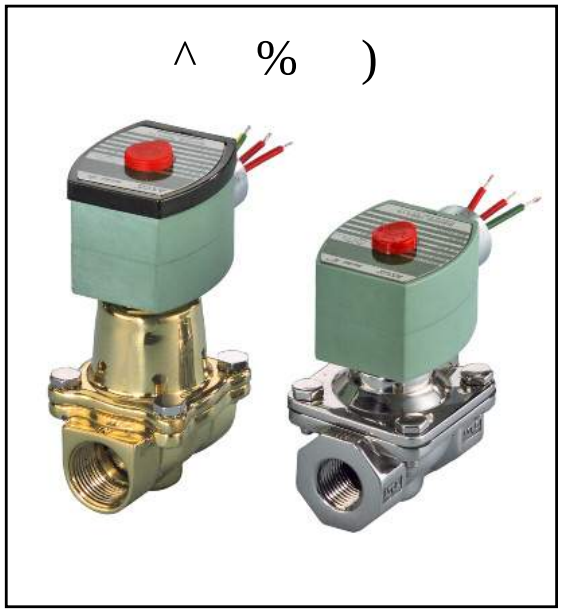

Construction

Valve Parts in Contact with Fluids		
Body	Brass	304 Stainless Steel*
Seals and Discs	NBR or PTFE	
Disc-Holder	PA	
Core Tube	305 Stainless Steel	
Core and Plugnut	430F Stainless Steel	
Springs	302 Stainless Steel	
Shading Coil	Copper	Silver

*Catalog Numbers 8210G127, 8210G129, 8210G132, 8210G133 have 316L Stainless Steel bodies.

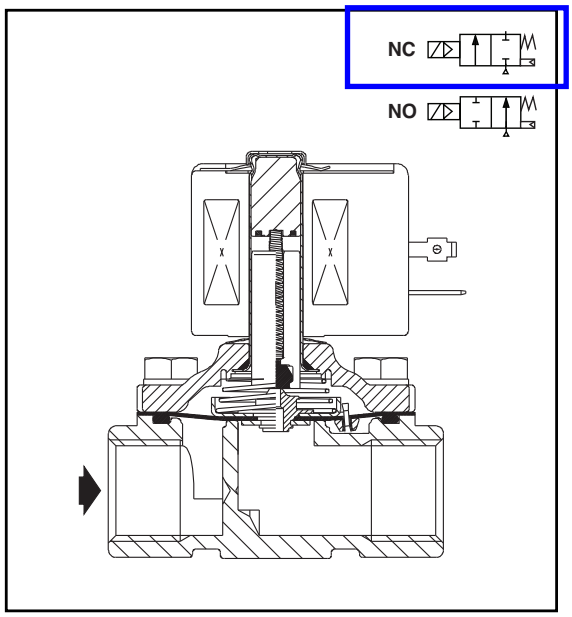

Electrical

Standard Coil and Class of Insulation	Watt Rating and Power Consumption				Spare Coil Part Number			
		AC			General Purpose		Explosionproof	
	DC Watts	Watts	VA Holding	VA Inrush	AC	DC	AC	DC
F	-	6.1	16	40	238210	-	238214	-
F	11.6	10.1	25	70	238610	238710	238614	238714
F	16.8	16.1	35	180	272610	~~97617~~	~~272614~~	~~97617~~
F	-	17.1	40	93	238610	-	238614	-
F	-	20	43	240	99257	-	99257	-
F	-	20.1	48	240	272610	-	272614	-
F	30.8	-	-	-	-	501695	-	501696
H	40.6	-	-	-	-	238910	-	238914

Standard Voltages: 24, 120, 240, 480 volts AC, 60 Hz (or 110, 220 volts AC, 50 Hz). 6, 12, 24, 120, 240 volts DC. Must be specified when ordering.
Other voltages available when required.

Nominal Ambient Temp. Ranges

RedHat II/RedHat AC: 32˚F to 125˚F (0˚C to 52˚C)

RedHat II DC: 32˚F to 104˚F (0˚C to 40˚C)
RedHat DC: 32˚F to 77˚F (0˚C to 25˚C)
(104˚F/40˚C occasionally)

8210G227 AC: 32˚F to 130˚F (0˚C to 54˚C)
DC: 32˚F to 90˚F (0˚C to 32˚C)

Refer to Engineering Section for details.

Solenoid Enclosures

Standard: RedHat II - Watertight, Types ~~1, 2, 3, 3S, 4, and~~ 4X; RedHat - Type I.

Optional: RedHat II - Explosionproof and Watertight, Types 3, 3S, 4, 4X, 6, 6P, 7, and 9; Red-Hat - Explosionproof and Watertight, Types 3, 4, 4X, 7, and 9.

(To order, add prefix "EF" to catalog number, except Catalog Numbers 8210B057, 8210B058, and 8210B059, which are not available with Explosionproof enclosures.)
See Optional Features Section for other available options.

Approvals

UL listed as indicated. CSA certified.
RedHat II meets applicable CE directives.
Refer to Engineering Section for details.

ATEX/IECEx certified with prefix "EV" as listed. *Refer to Optional Features Electrical Section for details.*

Specifications (English units)

Pipe Size (in)	Orifice Size (in)	Cv Flow Factor	Operating Pressure Differential (psi) Min.	Max. AC Air-Inert Gas	Max. AC Water	Max. AC Light Oil @ 300 SSU	Max. DC Air-Inert Gas	Max. DC Water	Max. DC Light Oil @ 300 SSU	Max. Fluid Temp. °F AC	Max. Fluid Temp. °F DC	Brass Body Catalog Number	Brass Body Const. Ref. ④	Brass Body UL ⑤ Listing	Stainless Steel Body Catalog Number	Stainless Steel Body Const. Ref. ④	Stainless Steel Body UL ⑤ Listing	Watt Rating/ Class of Coil Insulation ⑦ AC	Watt Rating/ Class of Coil Insulation ⑦ DC
NORMALLY CLOSED (Closed when de-energized), NBR or PTFE ② Seating																			
3/8	3/8	1.5	①	150	125	-	40	40	-	180	150	8210G073 ③	1P	●	8210G036 ③	1P	●	6.1/F	11.6/F
3/8	5/8	3	0	150	150	-	40	40	-	180	150	8210G093	5D	❍	-	-	-	10.1/F	11.6/F
3/8	5/8	3	5	200	150	135	125	100	100	180	150	8210G001 ▼	6D	❍	-	-	-	6.1/F	11.6/F
3/8	5/8	3	5	300	300	300	-	-	-	175	-	8210G006 ✓	5D	❍	-	-	-	17.1/F	-
1/2	7/16	2.2	①	150	125	-	40	40	-	180	150	8210G015 ③	2P	●	8210G037 ③	2P	●	6.1/F	11.6/F
1/2	5/8	4	0	150	150	-	40	40	-	180	150	8210G094 ✓	5D	❍	-	-	-	10.1/F	11.6/F
1/2	5/8	4	0	150	150	125	40	40		175	150	-	-	-	8210G087 ✓	7D	●	17.1/F	11.6/F
1/2	5/8	4	5	200	150	135	125	100	100	180	150	8210G002 ▼	6D	❍	-	-	-	6.1/F	11.6/F
1/2	5/8	4	5	300	300	300	-	-	-	175	-	8210G007	5D	❍	-	-	-	17.1/F	-
1/2	3/4	4	5	-	300	-	-	300	-	130	90	8210G227	5D	❍ †	-	-	-	17.1/F	40.6/H
3/4	5/8	4.5	0	150	150	125	40	40	-	175	150	-	-	-	8210G088 ✓	7D	●	17.1/F	11.6/F
3/4	3/4	5	5	125	125	125	100	90	75	180	150	8210G009 ▼	9D	❍	-	-	-	6.1/F	11.6/F
3/4	3/4	5	0	150	150	-	40	40	-	180	150	8210G095 ✓	8D	❍	-	-	-	10.1/F	11.6/F
3/4	3/4	6.5	5	250	150	100	125	125	125	180	150	8210G003 ▼	11D	❍	-	-	-	6.1/F	11.6/F
3/4	3/4	6	0	250	200	200	200	200	200	200	180	8210G026 ⑥ ‡ ◆	40P/10D	●				16.1F	30.8/F
1	1	13	0	150	125	125	135	120	120	180	180	8210G054 ‡ ◆	41D/31D	●	8210G089 ‡ ◆	45D/15D	●	16.1/F	30.8/F
1	1	13	5	150	150	100	125	125	125	180	150	8210G004 ▼	12D	❍				6.1/F	11.6/F
1	1	13.5	0	300	225	115	-	-	-	200	-	8210G027 ‡	42P	●	-	-	-	20.1/F	-
1	1	13.5	10	300	300	300	-	-	-	175	-	8210G078 ②	13P	-	-	-	-	17.1/F	-
1 1/4	1 1/8	15	0	150	125	125	135	120	120	180	180	8210G055 ‡ ◆	43D/32D	●	-	-	-	16.1/F	30.8/F
1 1/4	1 1/8	15	5	150	150	100	125	125	125	180	150	8210G008 ▼	16D	❍	-	-	-	6.1/F	11.6/F
1 1/2	1 1/4	22.5	0	150	125	125	135	120	120	180	180	8210G056 ‡ ◆	44D/33D	●	-		-	16.1/F	30.8/F
1 1/2	1 1/4	22.5	5	150	150	100	125	125	125	180	150	8210G022 ▼	18D	●	8210G127	-	-	6.1/F	11.6/F
2	1 3/4	43	5	150	125	90	50	50	50	180	150	8210G100	20P	●	8210G129	-	-	6.1/F	11.6/F
2 1/2	1 3/4	45	5	150	125	90	50	50	50	180	150	8210G101	21P	●	-	-	-	6.1/F	11.6/F
NORMALLY OPEN (Open when de-energized), NBR Seating (PA Disc-Holder, except as noted)																			
3/8	5/8	3	0	150	150	125	125	125	80	180	150	8210G033	23D	●	-	-	-	10.1/F	11.6/F
3/8	5/8	3	5	250	200	200	250	200	200	180	180	8210G011 ⑧ ⑨	39D	●	-	-	-	10.1/F	11.6/F
1/2	5/8	4	0	150	150	125	125	125	80	180	150	8210G034 ✓	23D	●	-	-	-	10.1/F	11.6/F
1/2	5/8	3	0	150	150	100	125	125	80	180	150		-	-	8210G030 ✓	37D	●	10.1/F	11.6/F
1/2	5/8	4	5	250	200	200	250	200	200	180	180	8210G012 ⑧ ⑨	39D	●	-	-	-	10.1/F	11.6/F
3/4	3/4	5.5	0	150	150	125	125	125	80	180	150	8210G035 ✓	25D	●	-	-	-	10.1/F	11.6/F
3/4	5/8	3	0	150	150	100	125	125	80	180	150	-	-	-	8210G038 ✓	38D	●	10.1/F	11.6/F
3/4	3/4	6.5	5	-	-	-	250	200	200	-	180	8210C013	24D	●	-	-	-	-	16.8/F
3/4	3/4	6.5	5	250	200	200	-	-	-	180	-	8210G013	46D	●	-	-	-	16.1/F	-
1	1	13	0	125	125	125	-	-	-	180	-	8210B057 ⑥ ⑩	34D	●	-	-	-	20/F	-
1	1	13	5	-	-	-	125	125	125	-	180	8210D014	26D	●	-	-	-	-	16.8/F
1	1	13	5	150	150	125	-	-	-	180	-	8210G014	47D	●	-	-	-	16.1/F	-
1 1/4	1 1/8	15	0	125	125	125	-	-	-	180	-	8210B058 ⑥ ⑩	35D	●	-	-	-	20/F	-
1 1/4	1 1/8	15	5	-	-	-	125	125	125	-	180	8210D018	28D	●	-	-	-	-	16.8/F
1 1/4	1 1/8	15	5	150	150	125	-	-	-	180	-	8210G018	48D	●	-	-	-	16.1/F	-
1 1/2	1 1/4	22.5	0	125	125	125	-	-	-	180	-	8210B059 ⑥ ⑩	36D	●	-	-	-	20/F	-
1 1/2	1 1/4	22.5	5	-	-	-	125	125	125	-	180	8210D032	29D	●	-	-	-	-	16.8/F
1 1/2	1 1/4	22.5	5	150	150	125	-	-	-	180	-	8210G032	49D	●	8210G132	-	-	16.1/F	-
2	1 3/4	43	5	-	-	-	125	125	125	-	150	8210 103	30P	●	-	-		-	16.8/F
2	1 3/4	43	5	125	125	125	-	-	-	180	-	8210G103	50P	●	8210G133	-	-	16.1/F	-
2 1/2	1 3/4	45	5	-	-	-	125	125	125	-	150	8210 104	27P	●	-	-	-	-	16.8/F
2 1/2	1 3/4	45	5	125	125	125	-	-	-	180	-	8210G104	51P	●	-			16.1/F	-

① 5 psi on Air; 1 psi on Water.
② Valve provided with PTFE main disc.
③ Valve includes ULtem (G.E. trademark) piston.
④ Letter "D" denotes diaphragm construction; "P" denotes piston construction.
⑤ ❍ Safety Shutoff Valve; ● General Purpose Valve.
Refer to Engineering Section (Approvals) for details.
⑥ Valves not available with Explosionproof enclosures.
⑦ On 50 hertz service, the watt rating for the 6.1/F solenoid is 8.1 watts.
⑧ AC construction also has PA seating.
⑨ No disc-holder.
⑩ Stainless steel disc-holder.
† UL listed for fire protection systems per UL429A 120/60, 110/50 24VDC, no prefix and voltage options offered.
‡ DC constructions must have solenoid mounted vertical and upright.
✓ ATEX/IECEx certified with prefix "EV".
▼ ATEX/IECEx certified for DC only with prefix "EV".
◆ Not available in 6 Volt DC. EF and HB prefix only.

Dimensions: inches (mm)

Const. Ref.		H	K	L	P	W
30	in	8.22	X	5.06	5.47	4.87
	mm	209	X	129	139	124
31	in	5.13	3.19	3.76	4.32	3.27
	mm	130	81	95	110	83
32	in	5.60	3.44	3.66	4.57	3.27
	mm	142	87	93	116	83
33	in	5.92	3.66	4.51	4.80	3.89
	mm	150	93	115	122	99
34	in	6.91	X	3.75	6.09	3.25
	mm	176	X	95	155	83
35	in	7.34	X	3.66	6.34	3.25
	mm	186	X	93	161	83
36	in	7.69	X	4.38	6.56	3.91
	mm	195	X	111	167	99
37	in	4.61	2.75	2.81	3.89	2.39
	mm	117	70	71	99	61
38	in	4.61	2.75	2.81	3.89	2.39
	mm	117	70	71	99	61
39	in	5.42	2.31	2.75	4.86	3.80
	mm	138	59	70	123	97
40	in	5.20	3.29	2.81	4.50	2.28
	mm	132	83	71	114	58
41	in	5.13	3.10	3.75	4.32	3.25
	mm	130	79	95	110	83
42	in	6.43	4.40	3.93	5.62	3.25
	mm	163	112	100	143	83
43	in	5.57	3.35	3.66	4.57	3.25
	mm	142	85	93	116	83
44	in	5.90	3.57	4.38	4.79	3.91
	mm	150	91	111	122	99
45	in	5.26	3.17	3.75	4.38	3.84
	mm	134	81	95	111	98
46	in	4.95	3.10	3.84	4.31	2.75
	mm	126	79	98	110	70
47	in	6.43	3.59	3.75	4.81	3.52
	mm	163	91	95	122	90
48	in	6.43	3.59	3.66	4.81	3.73
	mm	163	91	93	122	95
49	in	6.91	3.75	4.38	4.96	4.40
	mm	176	95	111	126	112
50	in	8.13	4.15	5.06	5.37	4.87
	mm	207	105	129	136	124
51	in	8.13	4.15	5.50	5.37	5.18
	mm	207	105	140	136	132

IMPORTANT: Valves may be mounted in any position, except as noted in specifications table.

Const. Ref. 10, 15, 31, 32, 33

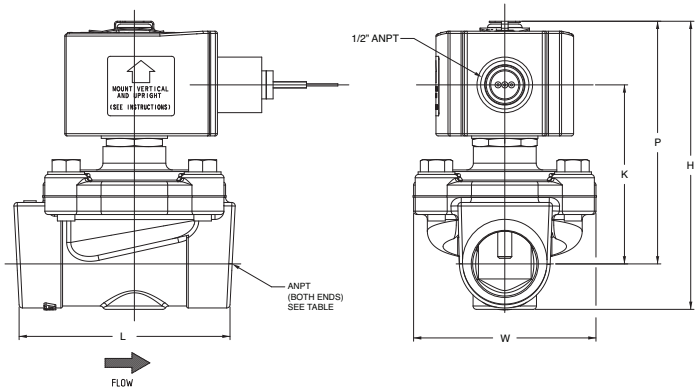

Const. Ref. 24, 34, 35, 36

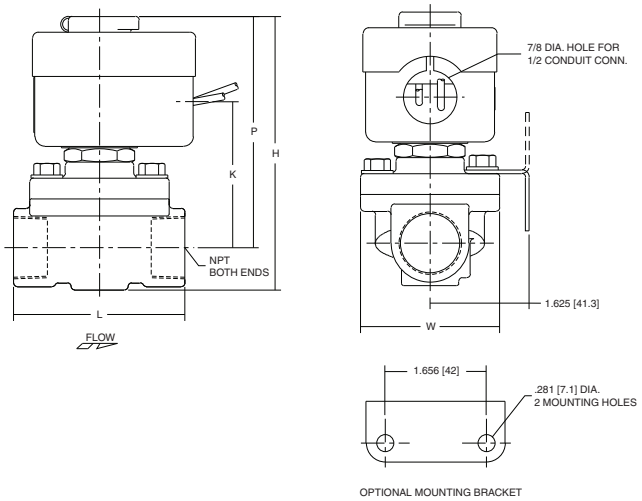

Const. Ref. 12, 16, 26, 28, 47, 48

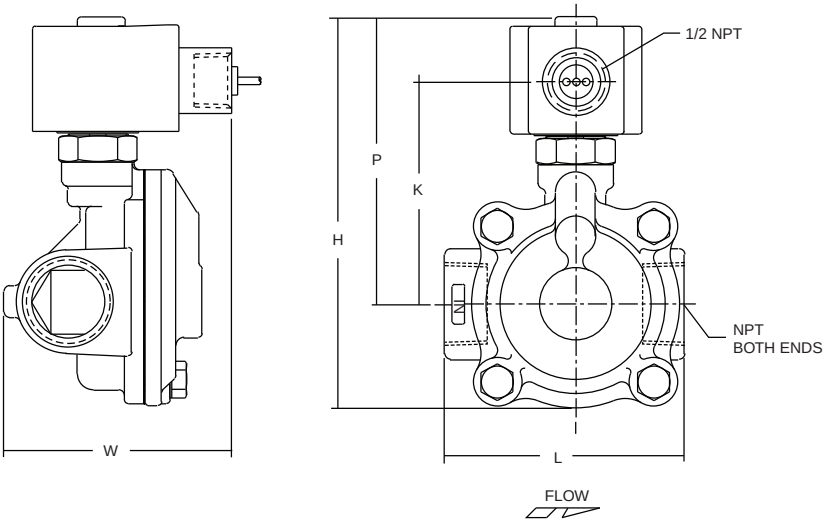

Dimensions: inches (mm)

Const. Ref.		H	K	L	P	W
1*	in	3.85	3.00	1.91	3.41	1.69
	mm	98	76	49	87	43
2*	in	4.17	3.25	2.28	3.63	1.69
	mm	106	83	58	92	43
5	in	3.84	2.31	2.75	3.28	2.28
	mm	98	59	70	83	58
6*	in	3.38	1.94	2.75	2.80	2.28
	mm	86	49	70	71	58
7	in	4.19	2.50	2.81	3.47	2.39
	mm	106	64	71	88	61
8	in	4.13	2.47	2.81	3.44	2.29
	mm	105	63	71	87	58
9*	in	3.66	2.10	2.81	2.96	2.28
	mm	93	53	71	75	58
10*	in	5.20	3.40	2.80	4.50	2.50
	mm	131	86	71	114	62
11*	in	4.16	2.66	3.84	3.52	2.75
	mm	106	68	98	89	70
12	in	5.64	3.15	3.75	4.01	3.36
	mm	143	80	95	102	85
13	in	4.44	3.22	3.75	4.19	5.81
	mm	113	82	95	106	147
15*	in	5.20	3.30	3.80	4.40	3.80
	mm	133	83	98	111	98
16	in	5.64	3.15	3.66	4.01	3.56
	mm	143	80	93	102	90
18*	in	6.11	3.30	4.38	4.16	3.92
	mm	155	84	111	106	100
20*	in	7.33	3.71	5.06	4.57	4.87
	mm	186	94	129	116	124
21*	in	7.33	3.71	5.50	4.57	4.87
	mm	186	94	140	116	124
23	in	4.35	2.65	2.75	3.79	2.28
	mm	110	67	70	96	58
24	in	5.06	X	3.78	4.44	2.75
	mm	129	X	96	113	70
25	in	4.64	2.81	2.81	3.94	2.28
	mm	118	71	71	100	58
26	in	6.53	X	3.75	4.91	3.19
	mm	166	X	95	125	81
27	in	8.22	X	5.50	5.47	4.87
	mm	209	X	140	139	124
28	in	6.53	X	3.66	4.91	3.19
	mm	166	X	93	125	81
29	in	7.03	X	4.38	5.06	4.40
	mm	179	X	111	129	112

* DC dimensions slightly larger.
IMPORTANT: Valves may be mounted in any position, except as noted in specifications table.

Const. Ref. 1, 2

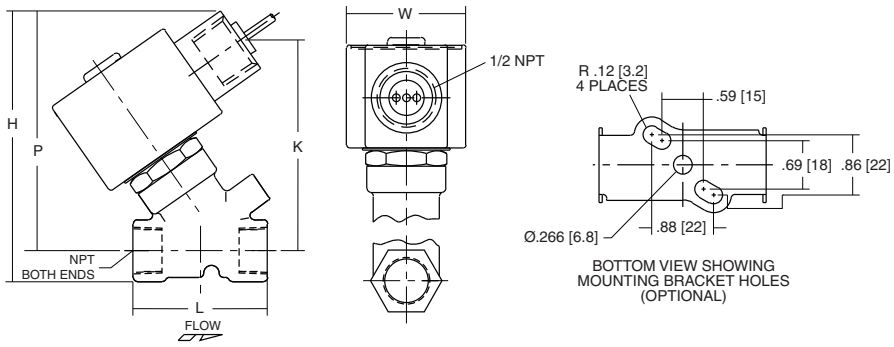

Const. Ref. 13

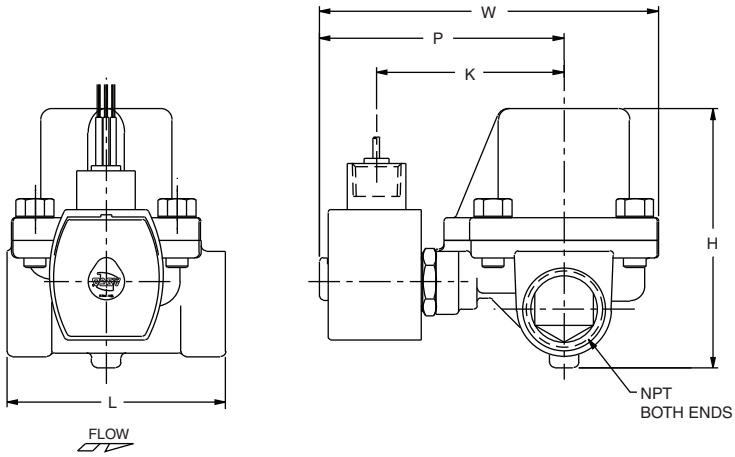

Const. Ref. 5-9, 11, 23 , 25, 37,38, 40-46

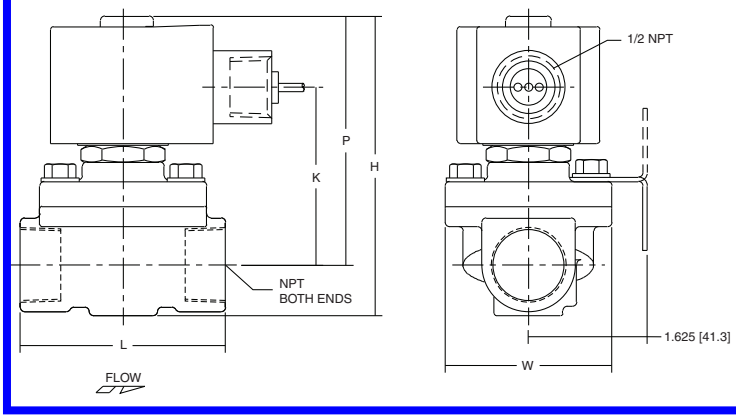

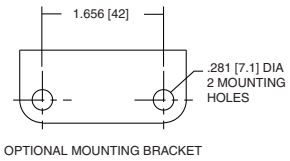

Features

- Wide range of pressure ratings, sizes, and resilient materials provide long service life and low internal leakage
- High flow valves for liquid, corrosive, and air/inert gas service
- Industrial applications include:
  - Car wash
  - Laundry equipment
  - Air compressors
  - Industrial water control
  - Pumps

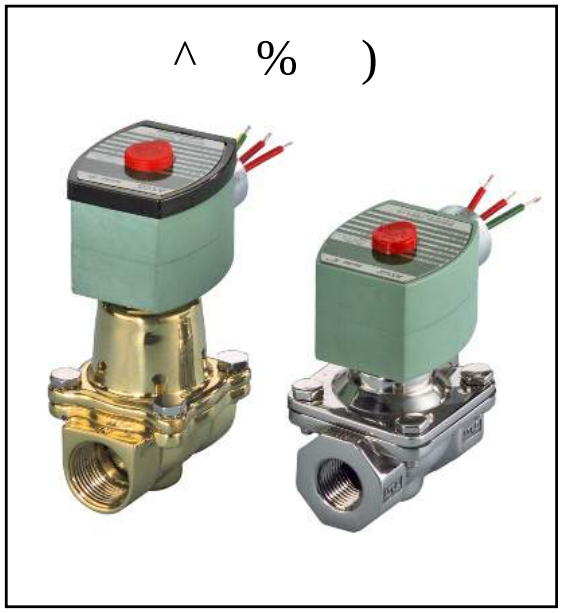

Construction

Valve Parts in Contact with Fluids		
Body	Brass	304 Stainless Steel*
Seals and Discs	NBR or PTFE	
Disc-Holder	PA	
Core Tube	305 Stainless Steel	
Core and Plugnut	430F Stainless Steel	
Springs	302 Stainless Steel	
Shading Coil	Copper	Silver

*Catalog Numbers 8210G127, 8210G129, 8210G132, 8210G133 have 316L Stainless Steel bodies.

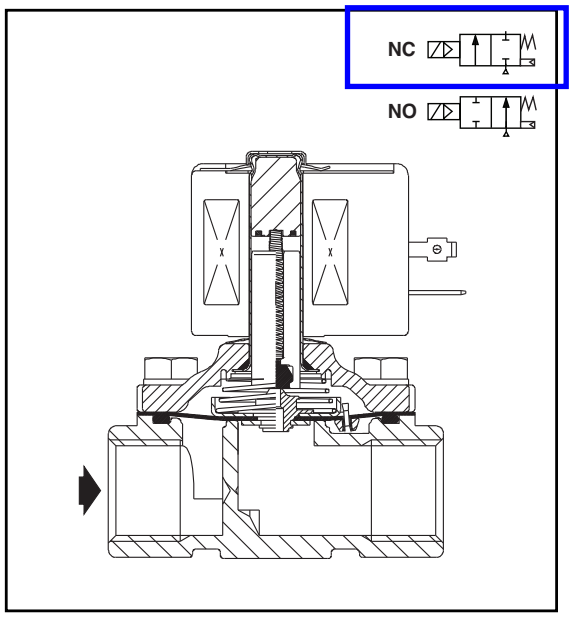

Electrical

Standard Coil and Class of Insulation	Watt Rating and Power Consumption				Spare Coil Part Number			
		AC			General Purpose		Explosionproof	
	DC Watts	Watts	VA Holding	VA Inrush	AC	DC	AC	DC
F	-	6.1	16	40	238210	-	238214	-
F	11.6	10.1	25	70	238610	238710	238614	238714
F	16.8	16.1	35	180	272610	~~97617~~	~~272614~~	~~97617~~
F	-	17.1	40	93	238610	-	238614	-
F	-	20	43	240	99257	-	99257	-
F	-	20.1	48	240	272610	-	272614	-
F	30.8	-	-	-	-	501695	-	501696
H	40.6	-	-	-	-	238910	-	238914

Standard Voltages: 24, 120, 240, 480 volts AC, 60 Hz (or 110, 220 volts AC, 50 Hz). 6, 12, 24, 120, 240 volts DC. Must be specified when ordering.
Other voltages available when required.

Nominal Ambient Temp. Ranges

RedHat II/RedHat AC: 32˚F to 125˚F (0˚C to 52˚C)

RedHat II DC: 32˚F to 104˚F (0˚C to 40˚C)
RedHat DC: 32˚F to 77˚F (0˚C to 25˚C)
(104˚F/40˚C occasionally)

8210G227 AC: 32˚F to 130˚F (0˚C to 54˚C)
DC: 32˚F to 90˚F (0˚C to 32˚C)

Refer to Engineering Section for details.

Solenoid Enclosures

Standard: RedHat II - Watertight, Types ~~1, 2, 3, 3S, 4, and~~ 4X; RedHat - Type I.

Optional: RedHat II - Explosionproof and Watertight, Types 3, 3S, 4, 4X, 6, 6P, 7, and 9; Red-Hat - Explosionproof and Watertight, Types 3, 4, 4X, 7, and 9.

(To order, add prefix "EF" to catalog number, except Catalog Numbers 8210B057, 8210B058, and 8210B059, which are not available with Explosionproof enclosures.)
See Optional Features Section for other available options.

Approvals

UL listed as indicated. CSA certified.
RedHat II meets applicable CE directives.
Refer to Engineering Section for details.

ATEX/IECEx certified with prefix "EV" as listed. *Refer to Optional Features Electrical Section for details.*

Specifications (English units)

Pipe Size (in)	Orifice Size (in)	Cv Flow Factor	Operating Pressure Differential (psi)							Max. Fluid Temp. °F		Brass Body			Stainless Steel Body			Watt Rating/ Class of Coil Insulation ⑦	
				Max. AC			Max. DC												
			Min.	Air-Inert Gas	Water	Light Oil @ 300 SSU	Air-Inert Gas	Water	Light Oil @ 300 SSU	AC	DC	Catalog Number	Const. Ref. ④	UL ⑤ Listing	Catalog Number	Const. Ref. ④	UL ⑤ Listing	AC	DC
NORMALLY CLOSED (Closed when de-energized), NBR or PTFE ② Seating																			
3/8	3/8	1.5	①	150	125	-	40	40	-	180	150	8210G073 ③	1P	●	8210G036 ③	1P	●	6.1/F	11.6/F
3/8	5/8	3	0	150	150	-	40	40	-	180	150	8210G093	5D	❍	-	-	-	10.1/F	11.6/F
3/8	5/8	3	5	200	150	135	125	100	100	180	150	8210G001 ▼	6D	❍	-	-	-	6.1/F	11.6/F
3/8	5/8	3	5	300	300	300	-	-	-	175	-	8210G006 ✓	5D	❍	-		-	17.1/F	-
7/8	7/16	3.3	①	150	125		40	40		180	150	8210G015 ②	2P	●	8210G037 ②	2P	●	6.1/F	11.6/F
1/2	5/8	4	0	150	150	-	40	40	-	180	150	8210G094 ✓	5D	❍	-	-	-	10.1/F	11.6/F
1/2	3/8	4	0	150	150	125	40	40	-	175	150	-	-	-	8210G087 ✓	7D	●	17.1/F	11.6/F
1/2	5/8	4	5	200	150	135	125	100	100	180	150	8210G002 ▼	6D	❍	-	-	-	6.1/F	11.6/F
1/2	5/8	4	5	300	300	300	-	-	-	175	-	8210G007	5D	❍	-	-	-	17.1/F	-
1/2	3/4	4	5	-	300	-	-	300	-	130	90	8210G227	5D	❍ †	-	-	-	17.1/F	40.6/H
3/4	5/8	4.5	0	150	150	125	40	40	-	175	150	-	-	-	8210G088 ✓	7D	●	17.1/F	11.6/F
3/4	3/4	5	5	125	125	125	100	90	75	180	150	8210G009 ▼	9D	❍	-	-	-	6.1/F	11.6/F
3/4	3/4	5	0	150	150	-	40	40	-	180	150	8210G095 ✓	8D	❍	-	-	-	10.1/F	11.6/F
3/4	3/4	6.5	5	250	150	100	125	125	125	180	150	8210G003 ▼	11D	❍	-	-	-	6.1/F	11.6/F
3/4	3/4	6	0	350	300	200	200	200	200	200	180	8210G026 ② ‡ ◆	40P/10D	●	-	-	-	16.1F	30.8/F
1	1	13	0	150	125	125	135	120	120	180	180	8210G054 ‡ ◆	41D/31D	●	8210G089 ‡ ◆	45D/15D	●	16.1/F	30.8/F
1	1	13	5	150	150	100	125	125	125	180	150	8210G004 ▼	12D	❍	-	-	-	6.1/F	11.6/F
1	1	13.5	0	300	225	115	-	-	-	200	-	8210G027 ‡	42P	●	-	-	-	20.1/F	-
1	1	13.5	10	300	300	300	-	-	-	175	-	8210G078 ②	13P		-	-	-	17.1/F	-
1 1/4	1 1/8	15	0	150	125	125	135	120	120	180	180	8210G055 ‡ ◆	43D/32D	●	-	-	-	16.1/F	30.8/F
1 1/4	1 1/8	15	5	150	150	100	125	125	125	180	150	8210G008 ▼	16D	❍	-	-	-	6.1/F	11.6/F
1 1/2	1 1/4	22.5	0	150	125	125	135	120	120	180	180	8210G056 ‡ ◆	44D/33D	●	-	-	-	16.1/F	30.8/F
1 1/2	1 1/4	22.5	5	150	150	100	125	125	125	180	150	8210G022 ▼	18D	●	8210G127	-	-	6.1/F	11.6/F
2	1 3/4	43	5	150	125	90	50	50	50	180	150	8210G100	20P	●	8210G129	-	-	6.1/F	11.6/F
2 1/2	1 3/4	45	5	150	125	90	50	50	50	180	150	8210G101	21P	●	-	-	-	6.1/F	11.6/F
NORMALLY OPEN (Open when de-energized), NBR Seating (PA Disc-Holder, except as noted)																			
3/8	5/8	3	0	150	150	125	125	125	80	180	150	8210G033	23D	●	-	-	-	10.1/F	11.6/F
3/8	5/8	3	5	250	200	200	250	200	200	180	180	8210G011 ⑧ ⑨	39D	●	-	-	-	10.1/F	11.6/F
1/2	5/8	4	0	150	150	125	125	125	80	180	150	8210G034 ✓	23D	●	-	-	-	10.1/F	11.6/F
1/2	5/8	3	0	150	150	100	125	125	80	180	150	-	-	-	8210G030 ✓	37D	●	10.1/F	11.6/F
1/2	5/8	4	5	250	200	200	250	200	200	180	180	8210G012 ⑧ ⑨	39D	●	-	-	-	10.1/F	11.6/F
3/4	3/4	5.5	0	150	150	125	125	125	80	180	150	8210G035 ✓	25D	●	-	-	-	10.1/F	11.6/F
3/4	5/8	3	0	150	150	100	125	125	80	180	150	-	-	-	8210G038 ✓	38D	●	10.1/F	11.6/F
3/4	3/4	6.5	5	-	-	-	250	200	200	-	180	8210C013	24D	●	-	-	-	-	16.8/F
3/4	3/4	6.5	5	250	200	200	-	-	-	180	-	8210G013	46D	●	-	-	-	16.1/F	-
1	1	13	0	125	125	125	-	-	-	180	-	8210B057 ⑥ ⑩	34D	●	-	-	-	20/F	-
1	1	13	5	-	-	-	125	125	125	-	180	8210D014	26D	●	-	-	-	-	16.8/F
1	1	13	5	150	150	125	-	-	-	180	-	8210G014	47D	●	-	-	-	16.1/F	-
1 1/4	1 1/8	15	0	125	125	125	-	-	-	180	-	8210B058 ⑥ ⑩	35D	●	-	-	-	20/F	-
1 1/4	1 1/8	15	5	-	-	-	125	125	125	-	180	8210D018	28D	●	-	-	-	-	16.8/F
1 1/4	1 1/8	15	5	150	150	125	-	-	-	180	-	8210G018	48D	●	-	-	-	16.1/F	-
1 1/2	1 1/4	22.5	0	125	125	125	-	-	-	180	-	8210B059 ⑥ ⑩	36D	●	-		-	20/F	-
1 1/2	1 1/4	22.5	5	-	-	-	125	125	125	-	180	8210D032	29D	●	-	-	-	-	16.8/F
1 1/2	1 1/4	22.5	5	150	150	125	-	-	-	180	-	8210G032	49D	●	8210G132	-		16.1/F	-
2	1 3/4	43	5	-	-	-	125	125	125	-	150	8210 103	30P	●	-	-	-	-	16.8/F
2	1 3/4	43	5	125	125	125	-	-	-	180	-	8210G103	50P	●	8210G133	-	-	16.1/F	-
2 1/2	1 3/4	45	5	-	-	-	125	125	125	-	150	8210 104	27P	●	-	-	-	-	16.8/F
2 1/2	1 3/4	45	5	125	125	125	-	-	-	180	-	8210G104	51P	●	-			16.1/F	-

① 5 psi on Air; 1 psi on Water.
② Valve provided with PTFE main disc.
③ Valve includes ULtem (G.E. trademark) piston.
④ Letter "D" denotes diaphragm construction; "P" denotes piston construction.
⑤ ❍ Safety Shutoff Valve; ● General Purpose Valve.
Refer to Engineering Section (Approvals) for details.

⑥ Valves not available with Explosionproof enclosures.
⑦ On 50 hertz service, the watt rating for the 6.1/F solenoid is 8.1 watts.
⑧ AC construction also has PA seating.
⑨ No disc-holder.
⑩ Stainless steel disc-holder.
† UL listed for fire protection systems per UL429A 120/60, 110/50 24VDC, no prefix and voltage options offered.

‡ DC constructions must have solenoid mounted vertical and upright.
✓ ATEX/IECEx certified with prefix "EV".
▼ ATEX/IECEx certified for DC only with prefix "EV".
◆ Not available in 6 Volt DC. EF and HB prefix only.

Dimensions: inches (mm)

Const. Ref.		H	K	L	P	W
30	in	8.22	X	5.06	5.47	4.87
	mm	209	X	129	139	124
31	in	5.13	3.19	3.76	4.32	3.27
	mm	130	81	95	110	83
32	in	5.60	3.44	3.66	4.57	3.27
	mm	142	87	93	116	83
33	in	5.92	3.66	4.51	4.80	3.89
	mm	150	93	114	122	99
34	in	5.91	X	3.75	6.09	3.25
	mm	150	X	95	155	83
35	in	7.34	X	3.66	6.34	3.25
	mm	186	X	93	161	83
36	in	7.66	X	4.38	6.56	3.91
	mm	1.95	X	111	167	99
37	in	4.61	2.75	2.81	3.89	2.39
	mm	117	70	71	99	61
38	in	4.61	2.75	2.81	3.89	2.39
	mm	117	70	71	99	61
39	in	5.42	2.31	2.75	4.86	3.80
	mm	138	59	70	123	97
40	in	5.20	3.29	2.81	4.50	2.28
	mm	132	83	71	114	58
41	in	5.13	3.10	3.75	4.32	3.25
	mm	130	79	95	110	83
42	in	6.43	4.40	3.93	5.62	3.25
	mm	163	112	100	143	83
43	in	5.57	3.35	3.66	4.57	3.25
	mm	142	85	93	116	83
44	in	5.90	3.57	4.38	4.79	3.91
	mm	150	91	111	122	99
45	in	5.26	3.17	3.75	4.38	3.84
	mm	134	81	95	111	98
46	in	4.95	3.10	3.84	4.31	2.75
	mm	126	79	98	110	70
47	in	6.43	3.59	3.75	4.81	3.52
	mm	163	91	95	122	90
48	in	6.43	3.59	3.66	4.81	3.73
	mm	163	91	93	122	95
49	in	6.91	3.75	4.38	4.96	4.40
	mm	176	95	111	126	112
50	in	8.13	4.15	5.06	5.37	4.87
	mm	207	105	129	136	124
51	in	8.13	4.15	5.50	5.37	5.18
	mm	207	105	140	136	132

IMPORTANT: Valves may be mounted in any position, except as noted in specifications table.

Const. Ref. 10, 15, 31, 32, 33

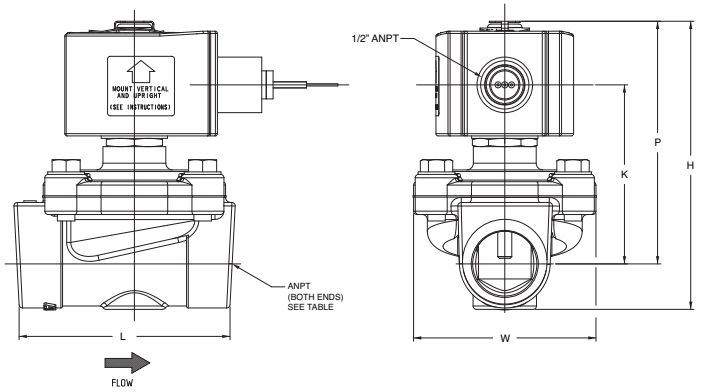

Const. Ref. 24, 34, 35, 36

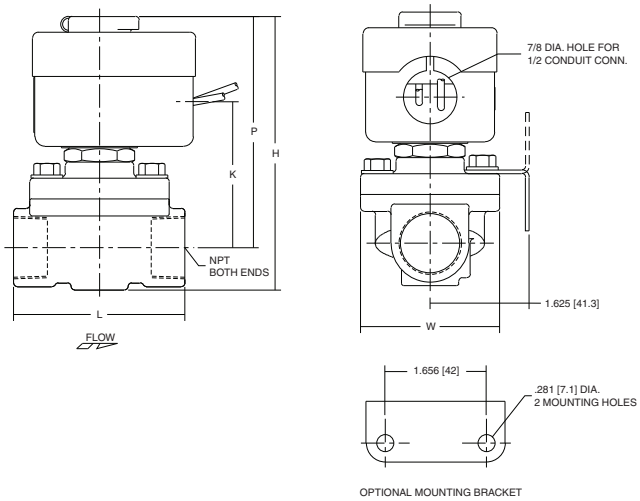

Const. Ref. 12, 16, 26, 28, 47, 48

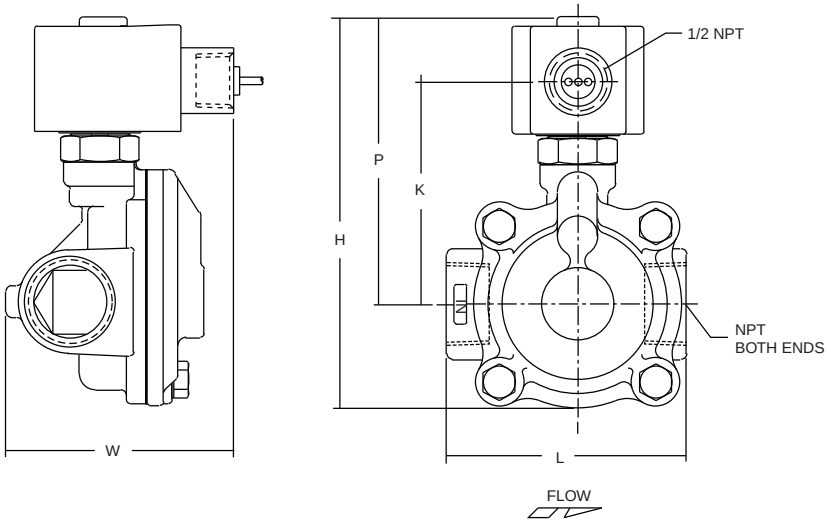

Dimensions: inches (mm)

Const. Ref.		H	K	L	P	W
1*	in	3.85	3.00	1.91	3.41	1.69
	mm	98	76	49	87	43
2*	in	4.17	3.25	2.28	3.63	1.69
	mm	106	83	58	92	43
5	in	3.84	2.31	2.75	3.28	2.28
	mm	98	59	70	83	58
6*	in	3.38	1.94	2.75	2.80	2.28
	mm	86	49	70	71	58
7	in	4.19	2.50	2.81	3.47	2.39
	mm	106	64	71	88	61
8	in	4.13	2.47	2.81	3.44	2.29
	mm	105	63	71	87	58
9*	in	3.66	2.10	2.81	2.96	2.28
	mm	93	53	71	75	58
10*	in	5.20	3.40	2.80	4.50	2.50
	mm	131	86	71	114	62
11*	in	4.16	2.66	3.84	3.52	2.75
	mm	106	68	98	89	70
12	in	5.64	3.15	3.75	4.01	3.36
	mm	143	80	95	102	85
13	in	4.44	3.22	3.75	4.19	5.81
	mm	113	82	95	106	147
15*	in	5.20	3.30	3.80	4.40	3.80
	mm	133	83	98	111	98
16	in	5.64	3.15	3.66	4.01	3.56
	mm	143	80	93	102	90
18*	in	6.11	3.30	4.38	4.16	3.92
	mm	155	84	111	106	100
20*	in	7.33	3.71	5.06	4.57	4.87
	mm	186	94	129	116	124
21*	in	7.33	3.71	5.50	4.57	4.87
	mm	186	94	140	116	124
23	in	4.35	2.65	2.75	3.79	2.28
	mm	110	67	70	96	58
24	in	5.06	X	3.78	4.44	2.75
	mm	129	X	96	113	70
25	in	4.64	2.81	2.81	3.94	2.28
	mm	118	71	71	100	58
26	in	6.53	X	3.75	4.91	3.19
	mm	166	X	95	125	81
27	in	8.22	X	5.50	5.47	4.87
	mm	209	X	140	139	124
28	in	6.53	X	3.66	4.91	3.19
	mm	166	X	93	125	81
29	in	7.03	X	4.38	5.06	4.40
	mm	179	X	111	129	112

* DC dimensions slightly larger.
IMPORTANT: Valves may be mounted in any position, except as noted in specifications table.

Const. Ref. 1, 2

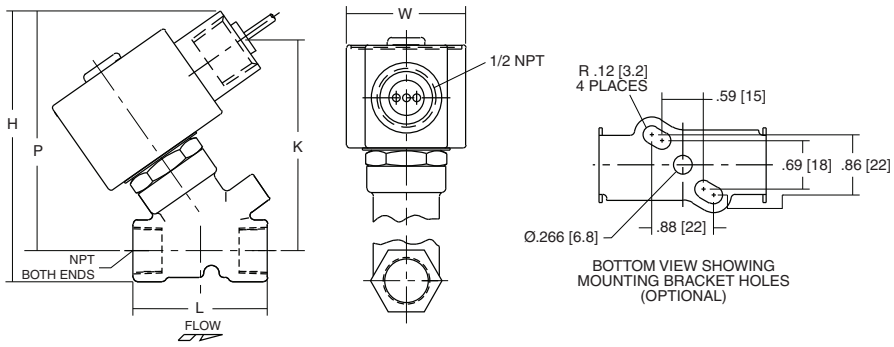

Const. Ref. 13

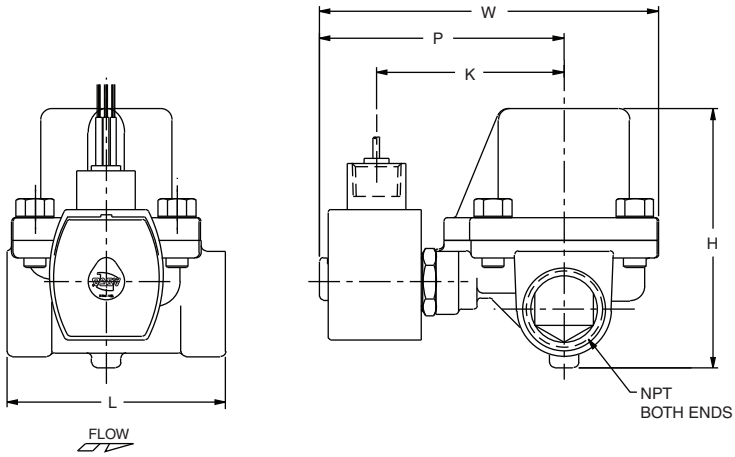

Const. Ref. 5-9, 11, 23 , 25, 37,38, 40-46

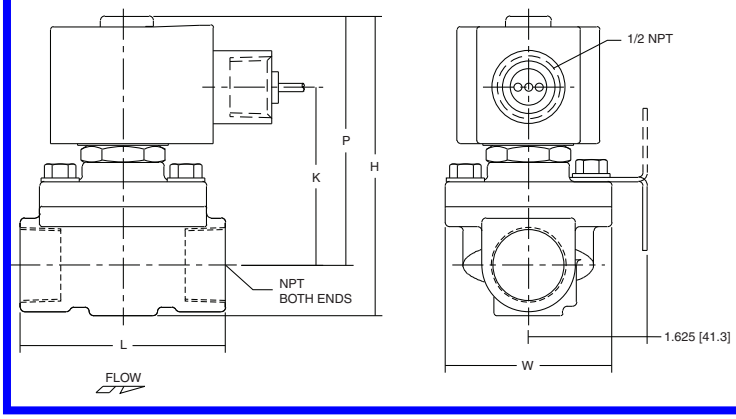

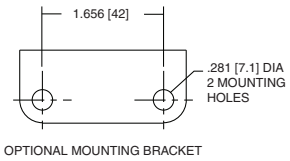

Enviro-Care
A WAMGROUP® Company

Water Hammer Eliminator

This page intentionally left blank

For Commercial Applications

Job Name _____ Contractor _____

Job Location _____ Approval _____

Engineer _____ Contractor's P.O. No. _____

Approval _____ Representative _____

Series 15M2

Water Hammer Arrestors

Sizes: ½" - 1" (15-25mm)

15M2

What is Water Hammer?

The noise from banging pipes is caused by shocks of high speed water flowing in the piping system when a fixture is suddenly closed. Sudden stoppage of the water (a non-compressible liquid) flowing at a given pressure and velocity causes a surge or spike of pressure and is called water hammer. When this occurs, a pressure wave travels back through the piping until it finds a point of relief.

Dishwashers, clothes washers, fast closing positive shutoff valves incorporated in the system all contribute to creating water shock which is not only annoying but damaging to pipes and appliances. The Watts Series 15M2 incorporates a pre-charged, permanent sealed air chamber to absorb the shock. The sealed chamber prevents the loss of air to the water and insures long and trouble-free life.

Features

- NPT solid hex brass adapter or solder end connection for easy installation
- Approved for installation with no access panel required
- May be installed in new or existing plumbing systems with a standard pipe tee vertically, horizontally or at any angle
- PDI Listed (PDI WH201)
- Maintenance free – piston is the only moving part
- Air pre-load is 60psi (4.2 bar)
- Factory air charged and permanently sealed

Standards

Standard: Listed by IAPMO, ASSE 1010 approved, ANSI A112.26.1M approved, PDI WH201 approved and certified.

Pressure - Temperature

Operating Pressure: Designed to operate on all domestic and commercial lines @ 150psi (10.6 bar) working pressure.

Temperature Range: 33°F to 180°F (0.5°C to 82°C).

Materials

Body:	Copper tubing
Piston:	Polypropylene
Adapter:	Brass
O-ring:	EPDM

Watts product specifications in U.S. customary units and metric are approximate and are provided for reference only. For precise measurements, please contact Watts Technical Service. Watts reserves the right to change or modify product design, construction, specifications, or materials without prior notice and without incurring any obligation to make such changes and modifications on Watts products previously or subsequently sold.

Sizing and Placement

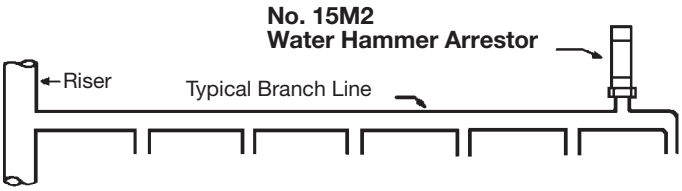

As shown, it has been established that the preferred location for the water hammer arrestor is at the end of the branch line between the last two fixtures served.

The location of the water hammer arrestor shown above applies to branch lines that do not exceed 20 ft. (6m) in length, from the start of the horizontal branch line to the last fixture supply on this branch line. When the branch line exceeds the 20 ft. (6m) length, an additional water hammer arrestor should be used. This practice is best defined by two rules which have been established to cover the placement of water hammer arrestors.

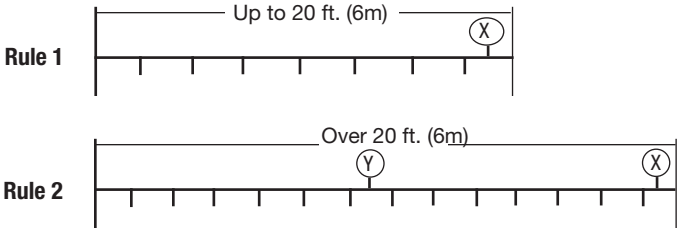

Rule 1 covers multiple fixture branch lines which do not exceed 20 ft. (6m) in length.

Explanation - Fixture-unit sizing and selection table is used to select the required PDI unit (water hammer arrestor).

Rule 2 covers multiple fixture branch lines which do exceed 20 ft. (6m) in length.

Explanation - Fixture-unit sizing and selection table is used to select the required PDI unit (water hammer arrestor). The sum of the fixture units rating of units X and Y shall be equal to or greater than the demand of the branches.

Dimensions - Weight

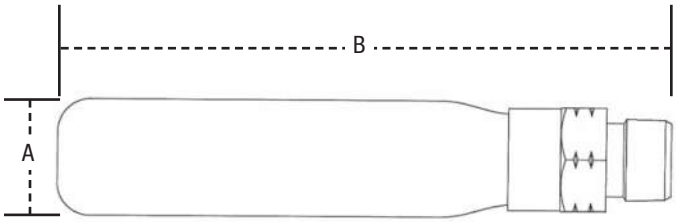

SIZE (DN)		DIMENSIONS				WEIGHT	
		A		B			
		in.	mm	in.	mm	(lbs)	(kgs)
Threaded							
½"	15M2-A	1⅛	28.5	5 15/16	150.9	0.5	0.2
¾"	15M2-B	1⅜	34.9	8 9/16	218.0	0.9	0.4
1"	15M2-C	1⅝	41.3	8 13/16	223.5	1.3	0.6
1"	15M2-D	2⅛	54.0	9 15/16	252.5	2.0	0.9
1"	15M2-E	2⅛	54.0	12 11/16	322.5	2.3	1.1
1"	15M2-F	2⅝	66.7	11 5/32	283.5	2.7	1.2

Sizing and Selection Table

SIZE (DN)	MODEL	ORDER CODE	CROSS FIXTURE UNITS	REF. PDI STANDARD
in. mm	*Threaded*			
½" 15	15M2-A	0750140	1-11	A
¾" 20	15M2-B	0750141	12-32	B
1" 25	15M2-C	0750142	33-60	C
1" 25	15M2-D	0750143	61-113	D
1" 25	15M2-E	0750144	114-154	E
1" 25	15M2-F	0750145	155-330	F

Fixture Units Sizing Information

FIXTURE	TYPE OF SUPPLY CONTROL	FIXTURE UNITS PUBLIC TOTAL	PUBLIC C.W.	PUBLIC H.W.	PRIVATE TOTAL	PRIVATE C.W.	PRIVATE H.W.
Water Closet 1.66 PF	Flush Valve	8	8	–	5	5	–
Water Closet 1.66 PF	Flush Tank	5	5	–	2.5	2.5	–
Pedestal Urinal 1.06 PF	Flush Valve	4	4	–	–	–	–
Stall or Wall Urinal	Flush Valve 1.06 PF	4	4	–	–	–	–
Stall or Wall Urinal	Flush Tank 1.06 PF	2	2	–	–	–	–
Lavatory	Faucet	2	1½	1½	1	1	1
Bathtub	Faucet	4	2	3	2	1½	1½
Shower Head	Mixing Valve	4	2	3	2	1	2
Bathroom Group	Flush Valve Closet	–	–	–	8	8	3
Bathroom Group	Flush Tank Closet	–	–	–	6	6	3
Separate Shower	Mixing Valve	–	–	–	2	1	2
Service Sink	Faucet	3	3	3	–	–	–
Laundry Tubs (1-3)	Faucet	–	–	–	3	3	3
Combination Fixture	Faucet	–	–	–	3	3	3

WATTS®

A Watts Water Technologies Company

ISO 9001-2008 CERTIFIED

USA: No. Andover, MA • Tel. (978) 688-1811 • Fax: (978) 794-1848 • www.watts.com
Canada: Burlington, ONT. • Tel. (905) 332-4090 • Fax: (905) 332-7068 • www.wattscanada.ca

© 2011 Watts

Enviro-Care
A WAMGROUP® Company

Water Strainer(s)

This page intentionally left blank

KECKLEY

Style SSB-7

Y-Strainer
Stainless Steel (ASTM A 351, Grade CF8M)
600 lb. Threaded
600 lb. Socket Weld

Cast 316 Stainless Steel Y-Strainer

APPLICATIONS

Steam, water, oil or gas where protection from foreign matter in a pipeline is required.

CONSTRUCTION

The Keckley Style SSB-7 stainers are constructed from rugged 316 stainless steel castings that are machined to exacting specifications.

Socket Weld bore is in compliance with ASME B16.11 unless otherwise specified.

FEATURES

The Keckley Style SSB-7 strainer features a machined groove in the body and cap for proper alignment and to ensure accurate reseating when servicing is required. This strainer has a straight threaded cap and is furnished standard with a NPT blow-off connection. The gasket is 304 stainless steel spiral wound and is compressed between the body and cap (for maximum strength and durability) and designed for both high pressure and high temperature service. Keckley Style SSB-7 strainers can be supplied with a stainless steel blow-off plug upon request.

SCREENS

Standard perforated 304 stainless steel screens are spot welded along the seam for maximum strength. Different size perforations and meshes are available in stainless steel, monel, and brass to meet specific media requirements. If media is not indicated, screens for *steam* will be supplied.

SELF CLEANING

Self cleaning is accomplished by opening the valve or drain plug connected to the blow-off port. **Warning:** See Maintenance Instructions on page S6 of the Strainer Information Section for additional precautions and detailed information on servicing the strainer.

WORKING PRESSURES - NON SHOCK

NOM. RATING	MEDIA	1/4" to 3"	8 mm to 80 mm
600# (THREADED & SOCKET WELD)	STEAM	600 PSI @ 1125ºF	4138 KPa @ 607ºC
	W.O.G.	1440 PSI @ 100ºF	9932 KPa @ 38ºC

KECKLEY

TECHNICAL DATA
DIMENSIONS AND WEIGHTS

Style SSB-7

Y-Strainer, 600 lb. Threaded & Socket Weld Stainless Steel (ASTM A 351, Grade CF8M)

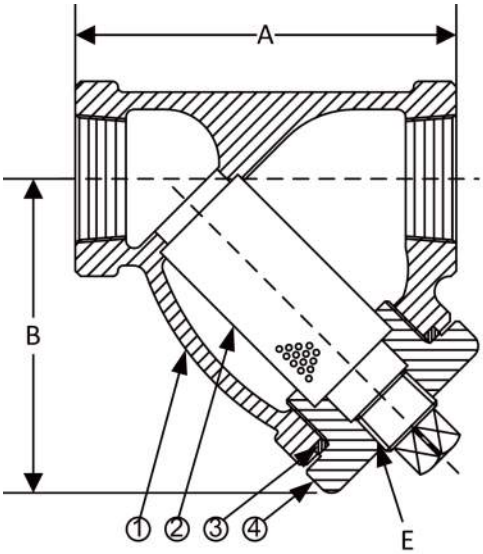

Threaded

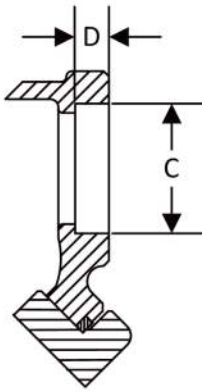

Socket Weld

PARTS LIST		
ITEM	DESCRIPTION	MATERIAL
1	Body	Stainless Steel (ASTM A 351, Grade CF8M)
2	Screen	Stainless Steel (304)
3	Gasket	Spiral Wound Stainless Steel (304)
4	Cap	Stainless Steel (ASTM A 351, Grade CF8M)

Optional: Blow-off Plug, Carbon Steel (ASTM A 105).
*Optional Body Materials Available in 304 and 400 Series SS, Alloy 20, Hastelloy, Inconel, Monel and Stellite..

STANDARD SCREENS SUPPLIED

SIZE		SCREEN GAGE	SCREEN PERFORATION					
			FOR STEAM		OPEN AREA	FOR LIQUID		OPEN AREA
in	mm		in	mm		in	mm	
1/4 to 3	8 to 80	22	3/64	1.2	33%	1/16	1.6	30%

Standard screens supplied are for **steam service**, unless otherwise specified.
Options: Other perforations, meshes, and screen materials are available.

SIZE		DIMENSIONS										WEIGHTS	
		A		B		C		D		E			
in	mm	in	mm	in	mm	in	mm	in	mm	in	mm	lbs	kgs
1/4	8	2-15/16	75	2-7/16	62	0.555	14	3/8	10	1/4	8	3	1
3/8	10	2-15/16	75	2-7/16	62	0.690	18	3/8	10	1/4	8	3	1
1/2	15	2-15/16	75	2-7/16	62	0.855	22	3/8	10	1/4	8	3	1
3/4	20	3-11/16	94	3	76	1.065	27	1/2	13	3/8	10	5	2
1	22	4-9/16	116	4-5/16	110	1.330	34	1/2	13	3/8	10	6	3
1-1/4	32	4-15/16	125	4-3/16	106	1.675	43	1/2	13	3/4	20	8	4
1-1/2	40	5-9/16	141	4-11/16	119	1.915	49	1/2	13	3/4	20	10	5
2	50	6-15/16	176	6-1/4	159	2.406	61	5/8	16	1	25	16	7
2-1/2	65	12	305	9-3/8	238	2.906	74	5/8	16	1-1/4	32	43	20
3	80	12	305	9-3/8	238	3.535	90	5/8	16	1-1/4	32	43	20

Certified dimensional drawings are available upon request.
†This table reflects only the nearest metric equivalents.

FLOW COEFFICIENTS

Size	C_V	Size	C_V	Size	C_V
1/4"	9.5	1"	30	2-1/2"	129.7
3/8"	9.5	1-1/4"	44.9	3"	161.3
1/2"	9.5	1-1/2"	61		
3/4"	18.7	2"	98		

TOTAL SCREEN AREA

Size	(in^2)	Size	(in^2)	Size	(in^2)
1/4"	2.75	1"	10.08	2-1/2"	78.14
3/8"	2.75	1-1/4"	12.79	3"	78.14
1/2"	2.75	1-1/2"	16.33		
3/4"	4.71	2"	27.04		

*See DETERMINING RATIOS on page S5 of the Strainer Information Section for calculating NET FREE AREA of the screen to inside pipe area.

PRESSURE vs. TEMPERATURE CHART

600# Threaded & Socket Weld Stainless Steel (ASTM A 351, Grade CF8M)

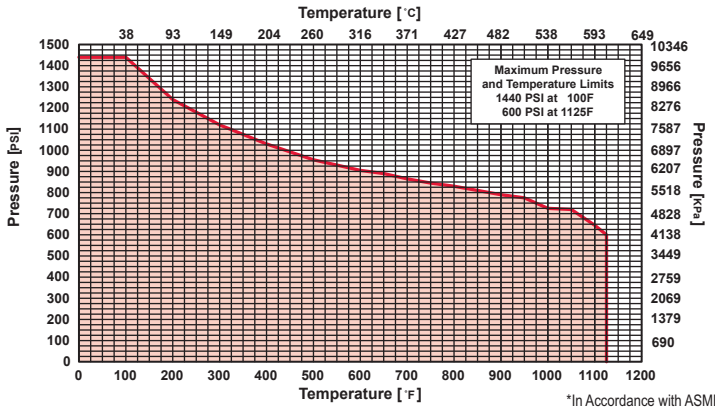

*In Accordance with ASME B16.34

KECKLEY

PRESSURE DROP CHART

Threaded "Y" Pattern Strainers (Styles B, BDI, E-150, F-150, F-300, SB, SB-7, SSB and SSB-7)

This pressure drop chart is based on the flow of clean water through the Keckley "Y" strainers listed above with screen perforations ranging from 3/64" through 1/8" and is additionally for use with those units equipped with a 20 mesh screen as standard.

TO USE CHARTS:

Find your desired rate of flow (GPM) on the left hand side of the chart. Follow its corresponding horizontal line to the point where it intersects the diagonal line indicating the strainer pipe size. From this point of intersection, follow the vertical line down to the bottom of the chart to determine the approximate pressure drop.

CORRECTION FACTORS:

For finer mesh screens that are backed with a perforated sheet, multiply the pressure drops shown at right by the following:

40 mesh	x 1.2
60 mesh	x 1.4
80 mesh	x 1.6
100 mesh	x 1.7

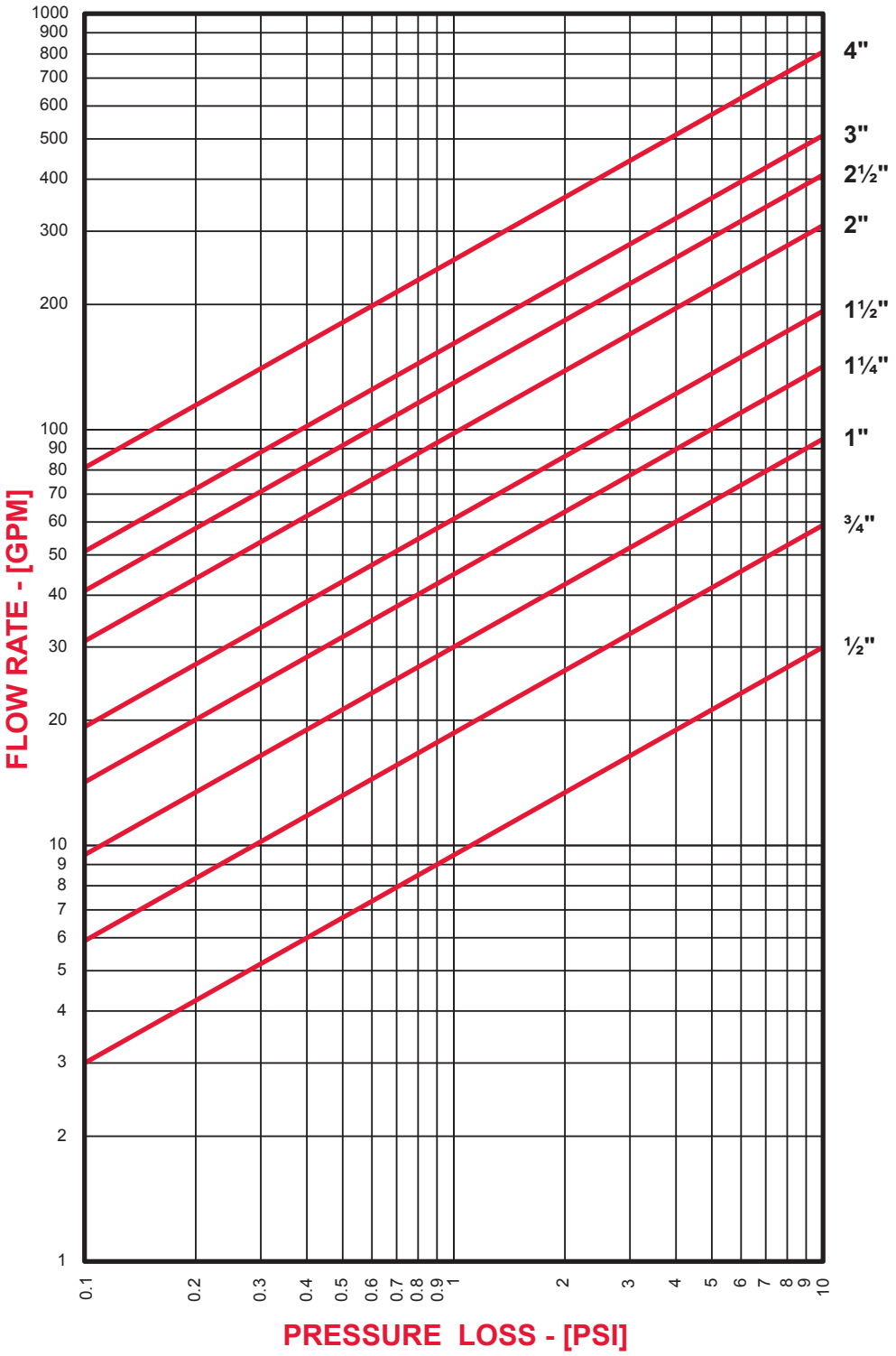

This page intentionally left blank

Enviro-Care
A WAMGROUP® Company

Pressure Gauge

This page intentionally left blank

Corrosion-Resistant Pressure Gauge

1/4 NPT Male Bottom Connection, 2-1/2" Dial

Measures	Pressure
For Use With	Air, Diesel Fuel, Gasoline, Hydraulic Fluid, Natural Gas, Water
Display Type	Dial
Dial Type	Dry
Dial Diameter	2 1/2"
Pipe Size	1/4
Scale Type	Single
Scale	psi
Environment Temperature Range	0° to 200° F
Process Temperature Range	0° to 200° F
Connection Type	Pipe
Pipe Connection Type	Threaded
Thread Type	NPT
Gender	Male
Case Material	304 Stainless Steel
Connection Material	316 Stainless Steel
Lens Material	Polycarbonate Plastic
Accuracy	±2%
Accuracy Scale	Mid Scale
Accuracy Grade	B
Connection Location	Bottom
Graduation Marks	2 psi
Numeric Increments	20 psi
Pressure Range	0 to 100 psi
RoHS	Not Compliant

Both the case material and connection threads are stainless steel, giving these gauges excellent corrosion resistance in harsh environments. Use them with pumps, filters, regulators, and in process lines to measure and display pressure.

This page intentionally left blank

Enviro-Care
A WAMGROUP® Company

Positive Displacement Pump

This page intentionally left blank

BÖRGER Rotary Lobe Pumps	Data sheet - Rotary Lobe Pump	20150825 Rev.: 1

Boerger, LLC
2860 Water Tower Place
Chanhassen, MN 55317

Tel.: 612-435-7300
Fax: 612-435-7301
E-mail: america@boerger.com

Customer: Enviro-Care Company
Pump Type: FL 518
Serial No.: 10000597
Code: PF5SARCFAAAAGCCC14Z **Delivery Date:** 6/5/2018
(please mention when ordering spare parts)

Conveying Product		Operating Data	
Name	Sludge - Primary/WAS	Location	Closed Building, Dry
Viscosity	1 cP	Hazardous Area	Not Classified
Solid Content	5-8%	Environmental Temp.	Ambient °F
Solid Size	-	Operating Mode	Continuous
Density/Specific Gravity	1.0	Suction Pressure	Flooded
Temperature	Ambient °F	Discharge Pressure	- psi
ph-value	Neutral	Differential Pressure	- psi

Performance	Flow	Differential Pressure	Shaft Speed
Min. Capacity	50.0 gpm	13.0 psi	57 rpm
Norm. Capacity			
Max. Capacity	350.0 gpm	13.0 psi	251 rpm

Code		Decoding	
1. - 3.	PF5	Pump Type	FL 518
4.	S	Gear Design (Bearings)	Standard
5.	A	Drive Shaft Design	1x Cylindrical drive shaft, Pos. 0
6.	R	Flow Direction	Reversible
7.	C	Lipseals / Inner Ring	Buna-N / Steel
8.	F	Pump Casing	ASTM A48 cast iron with MIP radial liners
9.	A	Cover & Axial Plates	Hardened steel
10.	A	Radial Liners	Hardened steel
11.	A	Holding Bushings	Steel
12.	A	Mechanical Seal	Duronit seal faces, Buna-N o-rings
13.	G	Rotor Design	Tri-lobe screw, replaceable tips
14.	C	Rotor / Tip Material	Buna-N
15.	C	O-Rings (static)	Buna-N
16.	C	Flange Gaskets	Buna-N
17.	1	Mounting Position	Feet down (M1)
18.	4	Series Index	4
19.	Z	Special Equipment	Temperature sensor in pump cover

Lubricants	
Intermediate Chamber	Mobil DTE 10 Excel 68
Timing Gear	Mobilgear 600 XP 220

Flanges (B1)	
Material	Galvanized Steel
Suction Side	6" ANSI 150-lb
Pressure Side	6" ANSI 150-lb

Drive Connection	
Coupling	Rotex 55 - lilac, Guard OSHA Orange
Bored	40 mm / 48 mm
Base Frame	Galvanized Steel
Configuration	In-Line

Gearing	
L-10 (B-10) Bearing Life	100,000 h

Drive Data	
Make / Model	Baldor VEM3774T / 07G082Y17G1
Power	10 hp
Speed	1760 rpm
Phase/Hz/Voltage	3/60/(230/460)
Enclosure	TEFC
Option	-
Option	-
Serial Number	F1802096015

Gear Reduction	
Make / Model	Nord SK32-N210TC
Output Speed	307 rpm
Gear Ratio	5.70:1
Option	-
Serial Number	202308839-100 28327605

Options:

Other:

BÖRGER Rotary Lobe Pumps	Data sheet - Rotary Lobe Pump	20150825 Rev.: 1

Boerger, LLC
2860 Water Tower Place
Chanhassen, MN 55317
Tel.: 612-435-7300
Fax: 612-435-7301
E-mail: america@boerger.com

Customer: Enviro-Care Company
Pump Type: FL 518
Serial No.: 10000598
Code: PF5SARCFAAAAGCCC14Z **Delivery Date:** 6/5/2018
(please mention when ordering spare parts)

Conveying Product		Operating Data	
Name	Sludge - Primary/WAS	Location	Closed Building, Dry
Viscosity	1 cP	Hazardous Area	Not Classified
Solid Content	5-8%	Environmental Temp.	Ambient °F
Solid Size	-	Operating Mode	Continuous
Density/Specific Gravity	1.0	Suction Pressure	Flooded
Temperature	Ambient °F	Discharge Pressure	- psi
ph-value	Neutral	Differential Pressure	- psi

Performance	Flow	Differential Pressure	Shaft Speed
Min. Capacity	50.0 gpm	13.0 psi	57 rpm
Norm. Capacity			
Max. Capacity	350.0 gpm	13.0 psi	251 rpm

Code		Decoding	
1. - 3.	PF5	Pump Type	FL 518
4.	S	Gear Design (Bearings)	Standard
5.	A	Drive Shaft Design	1x Cylindrical drive shaft, Pos. 0
6.	R	Flow Direction	Reversible
7.	C	Lipseals / Inner Ring	Buna-N / Steel
8.	F	Pump Casing	ASTM A48 cast iron with MIP radial liners
9.	A	Cover & Axial Plates	Hardened steel
10.	A	Radial Liners	Hardened steel
11.	A	Holding Bushings	Steel
12.	A	Mechanical Seal	Duronit seal faces, Buna-N o-rings
13.	G	Rotor Design	Tri-lobe screw, replaceable tips
14.	C	Rotor / Tip Material	Buna-N
15.	C	O-Rings (static)	Buna-N
16.	C	Flange Gaskets	Buna-N
17.	1	Mounting Position	Feet down (M1)
18.	4	Series Index	4
19.	Z	Special Equipment	Temperature sensor in pump cover

Lubricants	
Intermediate Chamber	Mobil DTE 10 Excel 68
Timing Gear	Mobilgear 600 XP 220

Flanges (B1)	
Material	Galvanized Steel
Suction Side	6" ANSI 150-lb
Pressure Side	6" ANSI 150-lb

Drive Connection	
Coupling	Rotex 55 - lilac, Guard OSHA Orange
Bored	40 mm / 48 mm
Base Frame	Galvanized Steel
Configuration	In-Line

Gearing	
L-10 (B-10) Bearing Life	100,000 h

Drive Data	
Make / Model	Baldor VEM3774T / 07G082Y17G1
Power	10 hp
Speed	1760 rpm
Phase/Hz/Voltage	3/60/(230/460)
Enclosure	TEFC
Option	-
Option	-
Serial Number	F1802096013

Gear Reduction	
Make / Model	Nord SK32-N210TC
Output Speed	307 rpm
Gear Ratio	5.70:1
Option	-
Serial Number	202308839-100 28327604

Options:

Other:

Performance curve

FL 518 Lobe Type G

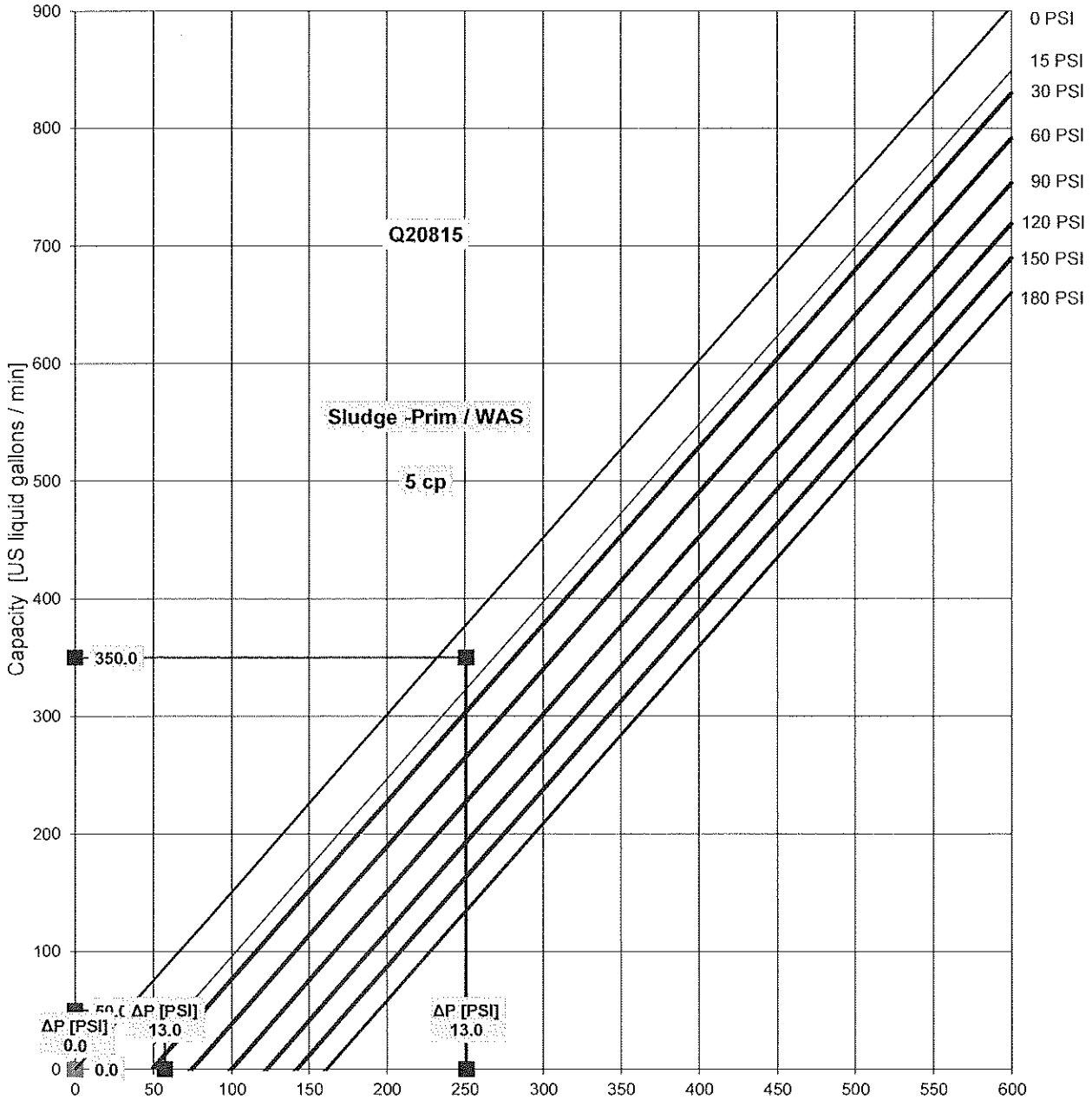

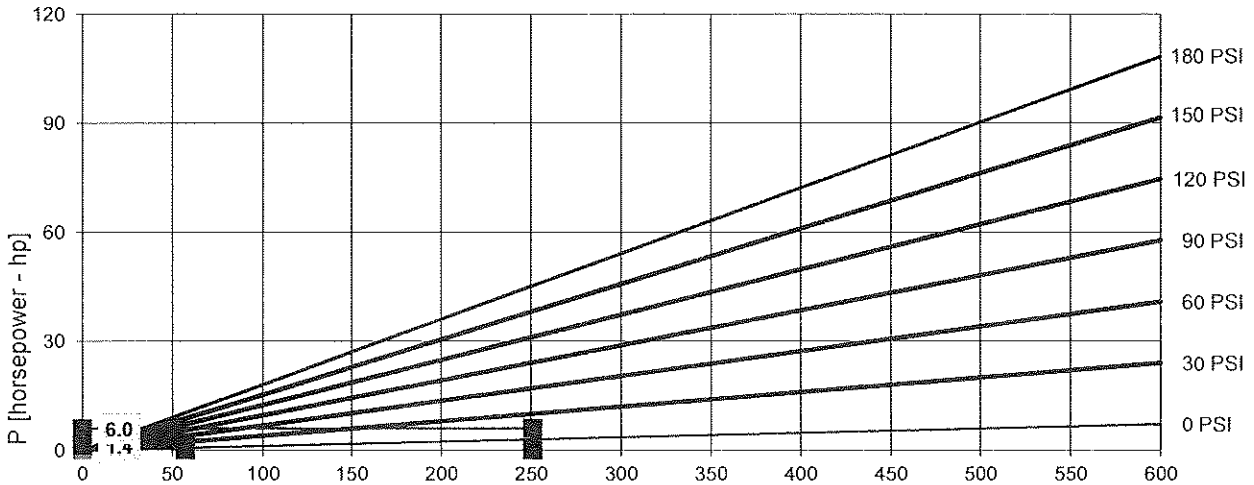

printed in 7/22/2016 by Boerger LLC - USA

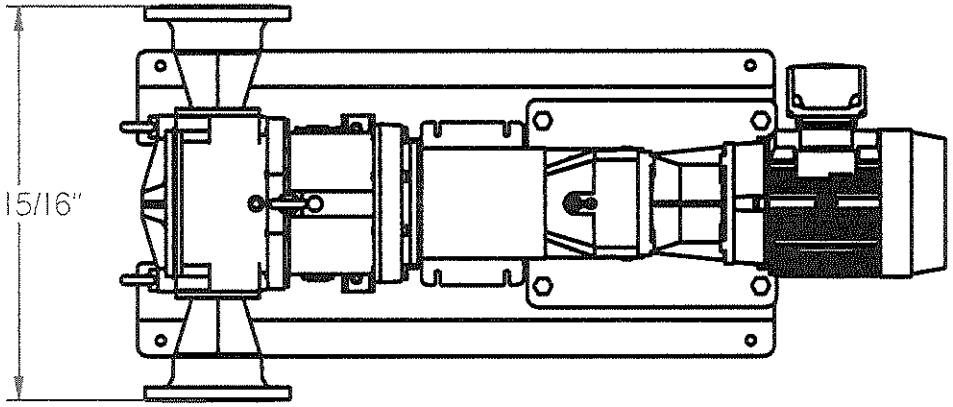

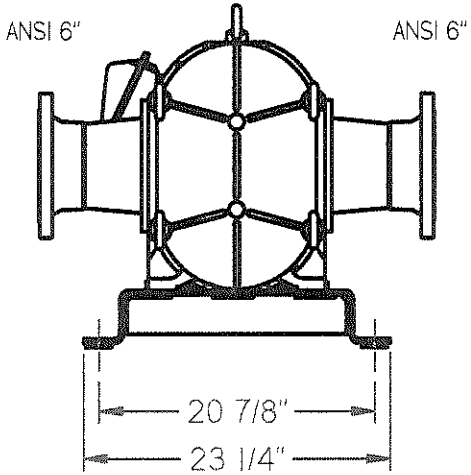

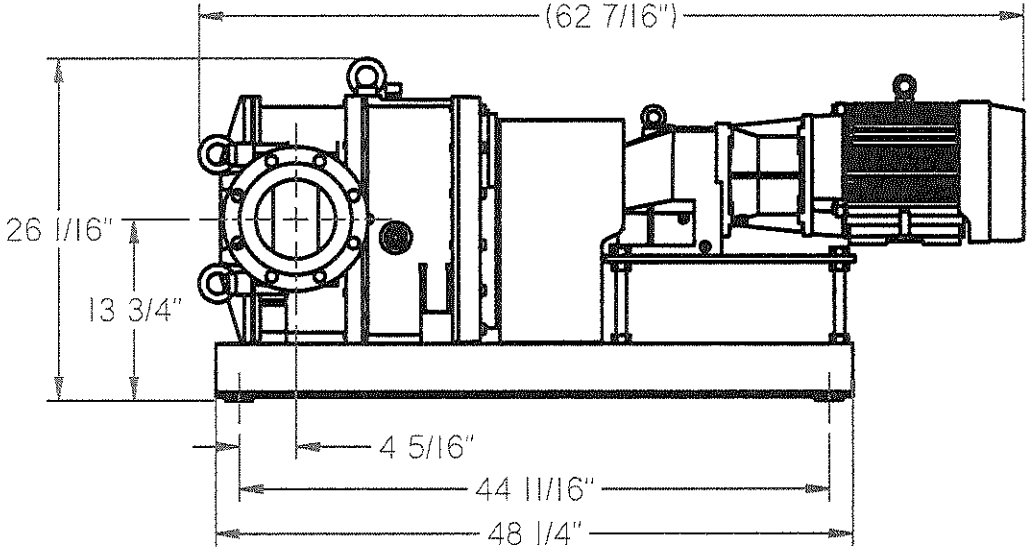

PROPRIETARY AND CONFIDENTIAL
THE INFORMATION CONTAINED IN THIS DRAWING IS THE SOLE PROPERTY OF Boerger, LLC. ANY REPRODUCTION IN PART OR AS A WHOLE WITHOUT THE WRITTEN PERMISSION OF Boerger, LLC IS PROHIBITED.

BOERGER, LLC
2860 Water Tower Place
Chanhassen, MN 55317
TEL: 612-435-7300
FAX: 612-435-7301

THIRD-ANGLE PROJECTION

BÖRGER

TITLE:
PUMP: FL 518
GEAR: SK32-210TC
POWER: 10 HP

ALL DIMENSIONS IN INCHES UNLESS OTHERWISE NOTED

TOLERANCES ± 1/2"

DO NOT SCALE DRAWING

	NAME	DATE
DRAWN	ccapper	06/27/13
CHECKED		

SHEET 1 OF 1

REV	DESCRIPTION	DATE	APPROVED

REVISION HISTORY

SIZE	DWG. NO.	REV
A	F510TN13KK211N-U0	0

Boerger dry run protection consists of a temperature sensing probe fitted into the front pump cover, and a digital temperature controller.

The controller is provided loose and is designed for flush panel mount.

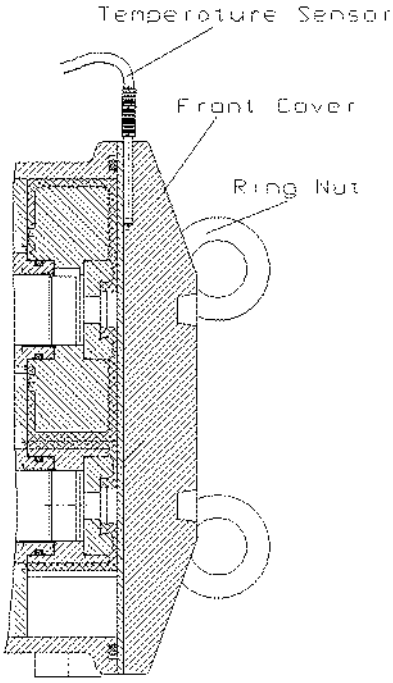

Temperature Sensor

- Pyromation model RT01 RTD Assembly
- Grade B tolerance, 100 ohm resistance
- 316ss sheath, ¼” diameter, 3” long
- 3-wire connection with 2” long stripped leads
- Teflon insulation, 84” long wire

Digital Temperature Controller (Provided Loose)

- Precision Digital NOVA PD570 Series
- Limit Controller
- 1/16 DIN Cutout
- Power 100-240 VAC
- Red LED Display
- Main output: 1 latching relay & 1 analog output
- Option: 1 alarm relay

BOERGER, LLC
2860 Water Tower Place
Chanhassen, MN 55317
p 612.435.7300
f 612.435.7301
e america@boerger.com
w www.boerger.com

RTD

Configuration Code RT01
RTD Assemblies with Extension Leadwire
Configuration Code RT02
RTD Assemblies with Sheath Terminations

The RTD elements illustrated and described on this page are designed to measure temperature in a variety of process and laboratory applications. These RTDs are specifically designed for use in two different process temperature ranges and will provide accurate and repeatable temperature measurement through a broad range. Low range RTDs are constructed using Teflon®-insulated, silver-plated copper internal leads with potting compounds to resist moisture penetration. High range RTDs are constructed with nickel internal leads inside swaged MgO insulated cable to allow higher temperature measurements at the RTD element and provide higher temperature lead protection along the sheath. The following tables allow customer selection of standard element materials, tolerances, sheath diameters, mounting fittings and terminations. Custom-built assemblies with non-standard specifications are available upon request.

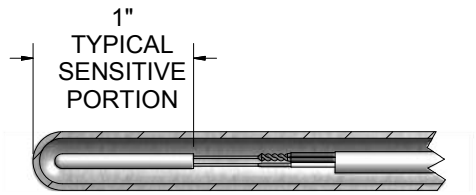

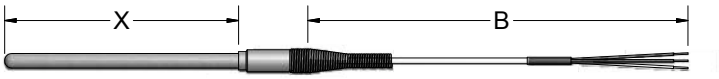

ORDER CODES

Example Order Number:

1-1	1-2(A)	1-3		1-4								
R1T185L	**48**	**3**	**-**	**003**	**-**	**Page RTD-2**	**-**	**Page RTD-3**	**-**	**Page RTD-4**	**-**	**Page RTD-5**

1-1 Single Platinum RTD Elements / 1-2 Available Sheath Diameters 316SS

CODE	TOLERANCE[1]	BASE RESISTANCE @ 0 ºC (R_0)	TEMPERATURE COEFFICIENT	CODE			
LOW RANGE WIRE WOUND (-200 to 200) ºC [-328 to 392] ºF				***1/8" O.D.***	***3/16" O.D.***	***1/4" O.D.***	***3/8" O.D.***
R1T185L	Grade B	100 Ω	α = 0.003 85 ºC^{-1}	28	38	48	68
R3T185L	Class AA	100 Ω	α = 0.003 85 ºC^{-1}	28	38	48	68
R5T185L	(1/5) Class B	100 Ω	α = 0.003 85 ºC^{-1}	28	38	48	68
R1T192L	Grade B	100 Ω	α = 0.003 92 ºC^{-1}	28	38	48	68
R3T192L	Class AA	100 Ω	α = 0.003 92 ºC^{-1}	28	38	48	68
LOW RANGE THIN FILM (-50 to 200) ºC [-58 to 392] ºF							
RBF185L	Class B	100 Ω	α = 0.003 85 ºC^{-1}	28	38	48	68
RAF185L	Class A	100 Ω	α = 0.003 85 ºC^{-1}	28	38	48	68
RBF195L	Class B	1000 Ω	α = 0.003 85 ºC^{-1}	28	38	48	68
HIGH RANGE WIRE WOUND (-200 to 600) ºC [-328 to 1112] ºF							
R1T185H	Grade B	100 Ω	α = 0.003 85 ºC^{-1}	28	38	48	68
RAT185H	Class A	100 Ω	α = 0.003 85 ºC^{-1}	28	38	48	68
R1T192H	Grade B	100 Ω	α = 0.003 92 ºC^{-1}	28	38	48	68

[1] Refer to RTD tolerance information in the general information section for calculations to determine specific tolerance at temperature.

1-4 Length

CODE
3 Digit 'X' Length

1-3 Element Connection

CODE	DESCRIPTION
2	2-wire
3	3-wire
4[1]	4-wire

[1] Not available in duplex

1-1 Duplex Platinum RTD Elements / 1-2 Available Sheath Diameters 316SS

CODE	TOLERANCE[1]	BASE RESISTANCE @ 0 ºC (R_0)	TEMPERATURE COEFFICIENT	CODE		
LOW RANGE WIRE WOUND (-200 to 200) ºC [-328 to 392] ºF				***3/16" O.D.***	***1/4" O.D.***	***3/8" O.D.***
R1T285L	Grade B	100 Ω	α = 0.003 85 ºC^{-1}	38	48	68
R3T285L	Class AA	100 Ω	α = 0.003 85 ºC^{-1}	38	48	68
R5T285L	(1/5) Class B	100 Ω	α = 0.003 85 ºC^{-1}	38	48	68
R1T292L	Grade B	100 Ω	α = 0.003 92 ºC^{-1}	38	48	68
R3T292L	Class AA	100 Ω	α = 0.003 92 ºC^{-1}	38	48	68
LOW RANGE THIN FILM (-50 to 200) ºC [-58 to 392] ºF						
RBF285L	Class B	100 Ω	α = 0.003 85 ºC^{-1}	38	48	68
RAF285L	Class A	100 Ω	α = 0.003 85 ºC^{-1}	38	48	68
RBF295L	Class B	1000 Ω	α = 0.003 85 ºC^{-1}	38	48	68
HIGH RANGE WIRE WOUND (-200 to 600) ºC [-328 to 1112] ºF						
R1T285H	Class B	100 Ω	α = 0.003 85 ºC^{-1}	38	48	68
RAT285H	Class A	100 Ω	α = 0.003 85 ºC^{-1}	38	48	68
R1T292H	Grade B	100 Ω	α = 0.003 92 ºC^{-1}	38	48	68

[1] Refer to RTD tolerance information in the general information section for calculations to determine specific tolerance at temperature.

1-2A

CODE	NOMINAL SHEATH DIAMETER (inches)	TIP DIA. O.D. (inches)	TIP LENGTH (inches)
88R48	1/2	1/4	1 1/4
68R38	3/8	3/16	1 1/4
48R28	1/4	1/8	1 1/4

REDUCED-TIP RTD's

Table 1-2A lists RTD elements with reduced tip sheaths. To order, use order code numbers from Tbl. 1-2A in place of straight sheath order code numbers from Tbl. 1-2. Other reduced tips are available upon request. EXAMPLE: R1T185L**88R483**-006.

Teflon® is a registered trademark of E. I. du Pont de Nemours and Company.

© 2006 Pyromation, Inc.

Configuration Code RT01
Configuration Code RT02
Optional Sheath Mounting Fittings and Bends

Select Sheath Mounting or Bend Options as desired from tables below.

COMPRESSION FITTING

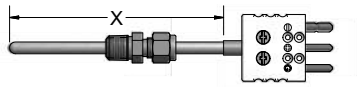

FIXED BUSHING

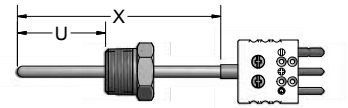

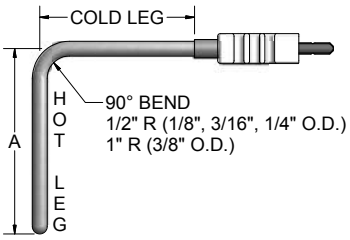

BAYONET CAP and SPRING (OPTION 13A)

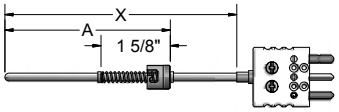

ADJUSTABLE FLANGE (OPTION 14)

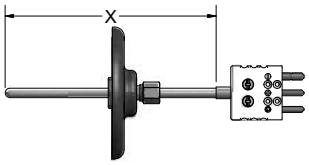

ORDER CODES

Example Order Number: **R5T185L483-006 - 01A,304 - PAGE RTD 3 - PAGE RTD 4 - PAGE RTD 5**

2

2-1 No Fitting or Bend Options

CODE	00

2-2 One-time Adjustable Compression Fittings

CODE	TYPE	NPT SIZE (inches)	PRESSURE RATED	AVAILABLE SHEATH DIAMETERS (inches)
01A	303 stainless steel	1/8	NO	1/8, 3/16, 1/4
05A	316 stainless steel	1/8	YES	1/8, 3/16, 1/4
05B	316 stainless steel	1/4	YES	1/8, 3/16, 1/4, 3/8
05C	316 stainless steel	1/2	YES	1/8, 1/4, 3/8
15A	Brass	1/8	NO	1/8, 3/16, 1/4
15B	Brass	1/4	NO	3/16, 1/4, 3/8
15C	Brass	1/2	NO	1/4, 3/8

2-3 Re-adjustable Compression Fittings

CODE	TYPE	NPT SIZE (inches)	AVAILABLE SHEATH DIAMETERS (inches)
10A	303 stainless steel	1/8	1/8, 3/16
10B	303 stainless steel	1/4	1/4, 3/8
10C	303 stainless steel	1/2	1/4, 3/8
12A	316 stainless steel	1/8	1/8, 3/16, 1/4
12B	316 stainless steel	1/4	1/8, 3/16, 1/4, 3/8
12C	316 stainless steel	1/2	1/8, 1/4, 3/8
11A	Brass	1/8	1/8, 3/16, 1/4
11B	Brass	1/4	1/8, 3/16, 1/4, 3/8
11C	Brass	1/2	1/4, 3/8
19C	Spring-loaded SS well fitting	1/2	3/16, 1/4

Teflon® gland standard 204 ºC [400 °F] max. For lava gland 649 ºC [1200 °F] max. opt. 10A and 10B only use letter suffix "L" after compression fitting order code. EXAMPLE: 10AL for lava gland.

2-6 Miscellaneous Options

CODE	TYPE	AVAILABLE SHEATH DIAMETER (inches)
13A _ _[1]	Spring-loaded bayonet fitting	1/8, 3/16
14	Adjustable flange with brass compression fitting	1/8, 3/16, 1/4, 3/8
16A	Spring-loaded adjustable bayonet compression fitting	1/8

[1] When ordering fixed bayonet fitting specify dimension "A". EXAMPLE: order code 13A06 is for a fixed bayonet adapter with 6" A Dimension.

2-5 Fixed Bushings

CODE 316 SS	MOUNTING THREAD NPT (inches)	AVAILABLE SHEATH DIAMETERS (inches)
8A _ _[1]	1/8	1/8, 3/16, 1/4
8B _ _[1]	1/4	1/8, 3/16, 1/4, 3/8
8C _ _[1]	1/2	1/8, 3/16, 1/4, 3/8
8D _ _[1]	3/4	1/8, 3/16, 1/4, 3/8

[1] When ordering fixed bushings, specify order code above, plus insertion length "U", as measured from hot tip to bottom of threaded bushing. EXAMPLE: order code 8A06 is 1/8" NPT, 316 SS bushing located 6" from hot tip.

2-4 Sheath Bends

CODE	DESCRIPTION
2 _ _	Sheath bent 45º
3 _ _	Sheath bent 90º

2" minimum hot leg length

When ordering bend options, specify hot leg dim. "A". EXAMPLE: order code 206 is a 45° bend with 6" hot leg. Total sheath length is Table 1 "X" length = hot leg plus cold leg.

Teflon® is a registered trademark of EI du Pont de Nemours and Company.

© 2006 Pyromation, Inc.

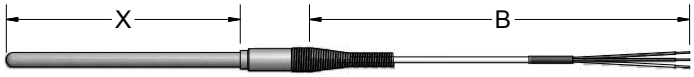

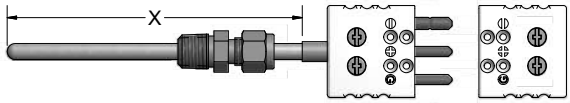

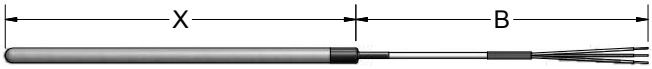

RT02 ORDER CODES RT01

Example Order Number:

R5T185L483-006-00 - 4, MC (3-1) **or R5T185L483-006-01A,304 - 16** (3-2) **- PAGE RTD-4 - PAGE RTD-5**

3-1 Plug and Jack Sheath Terminations

CODE	DESCRIPTION
4[1]	Standard plug
5[1]	Standard jack
6[2]	Miniature plug
7[2]	Miniature jack
	Options
MC	Mating connector
CL	Compression L bracket to hold plug to sheath
[1] If used with 3/8" O.D., option CL must be specified [2] Not available with 1/4" O.D. or 3/8" O.D. sheath	

3-1 Sheath Terminations

CODE	DESCRIPTION
22[1]	3" individual leads with terminal pins
[1] High temp RTDs are supplied with 1" long transition	

3-2 Leadwire transitions

(Requires Table 4 and 5 selections)

CODE	DESCRIPTION
13[1]	Same size transition with heat-shrink tubing 104 ºC [220 ºF]
15	Extension leadwire transition with relief spring 204 ºC [400 ºF]
16	Extension leadwire transition with heat-shrink tubing 104 ºC [220 ºF]
18[1]	Same size transition without heat-shrink tubing 204 ºC [400 ºF]
19	Extension leadwire transition without spring or heat-shrink tubing 204 ºC [400 ºF]
	Options
HT[2]	High temperature potting 538 ºC [1000 ºF] not available with option 13 or 16
[1] Not available with flex armor	
[2] Not available with option 13 or 16. When specifying high temp potting with Flex Armor option 19 must be selected.	

3-2 Threaded Fittings with Extension Leadwire

(Requires Table 4 and 5 selections)

CODE	DESCRIPTION
6HN23	1/2" x 1/2" NPT steel hex nipple
8HN23	1/2" x 1/2" NPT stainless steel hex nipple
9HP23	1/2" NPT stainless steel bushing (no process threads)
8RNDC23	3/4" process x 1/2" NPT stainless steel hex nipple

© 2006 Pyromation, Inc.

Select desired leadwire type by order code number, followed by desired length in inches.

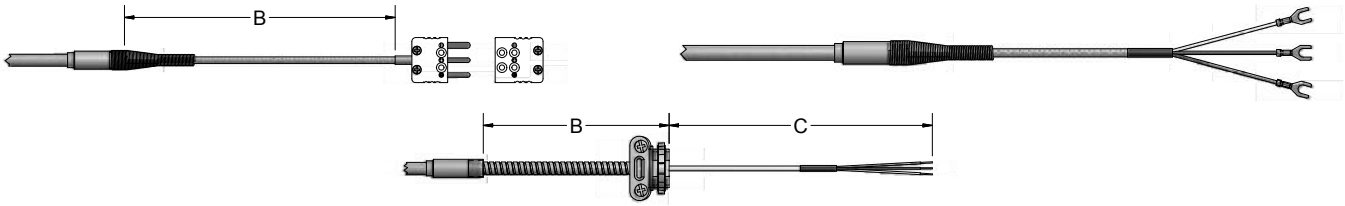

ORDER CODES

Example Order Number: **R5T185L483-006-01A,304-16 - T3 036 - PAGE RTD-5**

4 5

4 Extension Leadwire Type and B + C Dimension

CODE	DESCRIPTION	TEMP. RATING
FIBERGLASS		
F3J_ _ _	Fiberglass insulation - individual leads - stranded conductor (12" limit)	482 ºC [900 ºF]
F3_ _ _	Fiberglass insulation - stranded conductor	
F3A_ _ _	Fiberglass insulation - stranded conductor - flexible armor	
F3B_ _ _	Fiberglass insulation - stranded conductor - stainless steel overbraid	
TEFLON®		
T3J_ _ _	Teflon® insulation - individual leads - stranded conductor (12" limit)	204 ºC [400 ºF]
T3_ _ _	Teflon® insulation - stranded conductor	
T3A_ _ _	Teflon® insulation - stranded conductor - flexible armor	
T3B_ _ _	Teflon® insulation - stranded conductor - stainless steel overbraid	
M3_ _ _	Teflon® insulation - stranded conductor - stainless steel overbraid - Teflon® insulation	
T3M_ _ _	Teflon® insulation - stranded conductor - mylar shield	
T3MA_ _ _	Teflon® insulation - stranded conductor - mylar shield - flexible armor	
KAPTON®		
K3_ _ _	Kapton® insulation - stranded conductor	316 ºC [600 ºF]
K3A_ _ _	Kapton® insulation - stranded conductor - flexible armor	
K3B_ _ _	Kapton® insulation - stranded conductor - stainless steel overbraid	
SILICON RUBBER		
S3_ _ _	Teflon® insulation - stranded conductor - silicon rubber	204 ºC [400 ºF]
COIL CORDS		
C3060	PVC insulation - stranded conductor - coil cord - 60" extended length	104 ºC [220 ºF]
C3120	PVC insulation - stranded conductor - coil cord - 120" extended length	

Insert wire code number and 3 digit 'B' length in inches EXAMPLE: T3036 = 36" B length

For assemblies requiring leadwire beyond the flexible armor (illustrated in 'C' in drawing), insert 3 digit 'C' length after armor length.
EXAMPLE: F3A036 -012 = 36" B length with additional 12" 'C' length leads beyond armor.

All insulated leadwires in flexible armor are available with either extruded PVC or Teflon® covering over the flexible armor.
Substitute suffix codes T (Teflon®) or P (PVC) for the suffix 'A' code above. EXAMPLE: T3T is Teflon® covered armor.

Teflon® and Kapton® are registered trademarks of E. I. du Pont de Nemours and Company.

© 2006 Pyromation, Inc.

Select desired leadwire termination and options (if desired), by order code numbers below.

OPTION 3

OPTION 4, 4MC

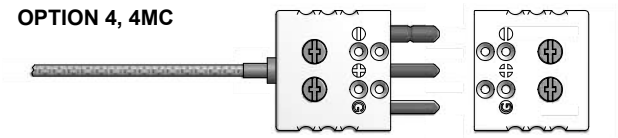

OPTION 8

OPTION 6, 6MC

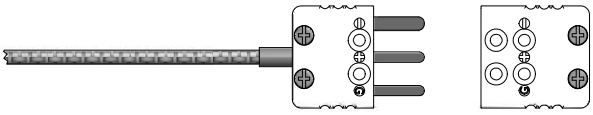

ORDER CODES

Example Order Number: **R5T185L483-006-01A,304-16-T3036 - 4, MC**

(5-1: 4, 5-2: MC)

5-1 Terminations

CODE	DESCRIPTION
0	Leads not stripped
2	2" split leads, 1/4" stripped
3	2" split leads with spade lugs
4	Standard plug
5	Standard jack
6	Miniature plug
7	Miniature jack
8	2" split leads with 1/4" female quick disconnects

5-2 Options

CODE	DESCRIPTION
BX	1/2" NPT BX connector with Options 0, 2, 3, or 8
CC	Plug or jack secured to leads with cable clamp
CG	Cord grip (1/2" NPT PVC)
MC	Mating connector
RB	Rubber boot

© 2006 Pyromation, Inc.

PROCESS & TEMPERATURE LIMIT CONTROLLERS

NOVA PD570 Series

- Thermocouple, RTD, & Process Input
- Universal Power Supply 100-240 VAC
- Latching Relay High or Low Limit Control
- 1 Latching Relay & 1 Alarm Relay
- Retransmitting 4-20 mA Output
- RS-485 Serial Communications Option
- Modbus® RTU/ASCII Communications
- Free Operating & Data Logging Software
- IP55 & IP65 Fronts
- 1/16 & 1/4 DIN Sizes
- 3 Year Warranty

PRECISION DIGITAL CORPORATION

PRECISION DIGITAL

www.predig.com

OPERATING DISPLAYS

Nova Limit Controllers have dual four-digit LEDs and display the PV, limit set point, relay status, and limit operation information.

Operating Display Navigation

To access additional operational information without the need to enter the setup menus, simply press the **SET/ENT** button.

Main Operating Display

- Displays process variable
- Displays the limit set point
- **Over** LED indicates when over limit conditions exist
- **Out** LED indicates latching relay status
- **ALM** alarm status LED indicator

System Condition

Over Limit Timer

Max/Min Input Value

EASY SETUP & PROGRAMMING

All programming of a Nova Limit Controller is done through the front panel. No switches or jumpers are required.

Front Panel Buttons

- Hold the **RST** button for 3 seconds when the unit is not in over limit conditions to reset the latching limit relay.
- Press the **SET/ENT** button to confirm an entered value. Hold the button for 3 seconds to enter or exit the setup groups. Press the **SET/ENT** button to access the next parameter when in a setup group.
- Press the **Up** button to increase numerical values including the set point or scroll through parameter options and group menus.
- Press the **Down** button to decrease numerical values including the set point or scroll through parameter options and group menus.
- Press the **LEFT** button to move to the next digit during numerical value programming.

Setup Group Menus

For easy setup parameter navigation, all parameters are grouped by category. To access the group menus, press and hold the **SET/ENT** button for 3 seconds. Navigate through the group menus using the **UP** or **DOWN** buttons as shown. To enter a group menu to access setup parameters, press the **SET/ENT** button.

Button	PV Display	Group Definition
ENT	PWd	Password
▲▼	G.CtL	Control Group
▲▼	G. In	Input Group
▲▼	G.ALn	Alarm Group
▲▼	G.rEt	Retransmission Group
▲▼	G.Con*	Communications Group*

*This group menu appears only on models with the serial communication option.

Menu Password

To prevent unauthorized changes to key parameters, a user defined lockout password must be entered to access the group menus that are not commonly used during operation. Enter the password at the prompt when navigating the group menus by pressing the **SET/ENT** button. The default password is 0.

Easy to Use Menu Structure

Each setup parameter is located in an associated menu group.

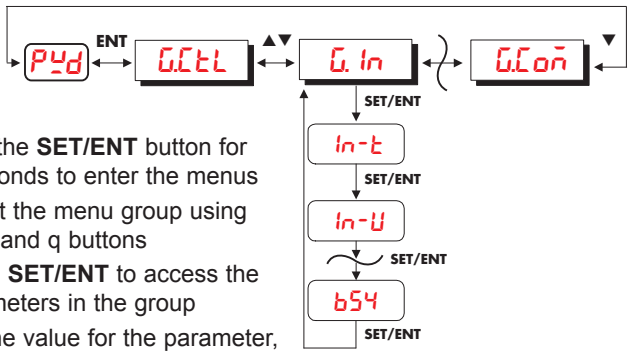

- Hold the **SET/ENT** button for 3 seconds to enter the menus
- Select the menu group using the p and q buttons
- Press **SET/ENT** to access the parameters in the group
- Set the value for the parameter, and use the **SET/ENT** button to select the next parameter
- Hold the **SET/ENT** button for 3 seconds to return to the operating display

For a complete list of setup parameters, their functions, and setting options, refer to the PD570 Series Instruction Manual.

PROCESS & TEMPERATURE INPUTS

Nova Controllers use a single universal input that accepts process and temperature inputs.

Thermocouple: J, K, T, E, R, B, S, L, N, U, W, Platinel II

RTD: Pt100 (0.00385), JPt100 (0.00392)

Process: -10 to 20 mV, 0 to 100 mV
0.4 to 2 V, 1 to 5 V, 0 to 10 V
4 to 20 mA input with a resistor shunt

GENERAL FEATURES

The PD570 Series of Limit Controllers come equipped with a limit control latching relay, alarm relay, and a 4-20 mA retransmitting output. These standard features make the Limit Controller an excellent process monitoring tool. Serial communications for Modbus or PC monitoring software expands the Limit Controller's capability.

Powerful Relay Functionality

All PD570 Series Limit Controllers have a 3 A Form C (SPDT) latching relay for use in limit control functions. All PD570 Series controllers also have a 1 A Form A (SPST) alarm relay.

- High or Low PV Limit Latching Relay
- Forward and Reverse (Fail-Safe) Latching and Alarm Relays
- High/Low and Set Point Deviation Alarms
- Fail-Safe and Standby Alarms
- Relay Delays and Reset Deadbands

Latching Relay Over Limit Control

When an over limit condition occurs, the latching relay will trigger. The relay must be reset manually and can only be reset once the input returns to normal operating conditions as established by the set point and programmable hysteresis.

4-20 mA Retransmitting Output

A 4-20 mA powered output is standard on all PD570 Series models. The output can be programmed to transmit over any input scale for any input type or based on the set point value.

Transmitter Loop Power Supply

The 4-20 mA retransmitting output may be configured to provide a 14 to 18 VDC @ 20 mA transmitter power supply.

Input Bias Adjustment

Up to five bias points set to specific input values can be used to provide precise offset adjustments through 4 bais zones. The controller will use the offset to create a smooth input value curve leading up to the bias points.

Max/Min Input Readings

Easily view the maximum or minimum input value reached during over limit conditions without entering the setup menus.

Display Over Limit Time

A timer to track the over limit times in minutes and seconds or hours and minutes is easily displayed from the operating menu.

Serial Communications & Adapters

Nova controllers with the serial communications option can be used for data acquisition or Modbus communication (RTU and ASCII). Nova controllers transmit via RS-485. The PDA7485 RS-232 to RS-485 and PDA8485 USB to RS-485 converters are available for use with the Nova Multi-Monitoring software or other PC applications.

NOVA PC SOFTWARE

Any Nova Controller with the serial communication option can be configured to interface with the Nova Multi-Monitoring PC software. Up to 30 controllers can be monitored and operated, and each can use independent data logging.

- Easy to Set Up and Use
- Connect up to 30 Nova Controllers
- View PV and Alarm Status
- Log, View, and Save Data in Spreadsheet Files
- Free Download from **www.predig.com**

Specifications

System Requirements: Windows® 95\98\ME\2000\XP
Communications: An RS-232 to RS-485 or USB to RS-485 converter may be used for communication with a PC and Nova Multi-Monitoring Software.
Number of Units: Up to 30 Nova Controllers
Baud Rate: 9,600 to 19,200 bps
Data Logging: Graph and save data as .hdr format. Each controller saves graphs independently. Data exportable in spreadsheet format.
Logging Interval: 1 second to 24 hours

Simultaneous Monitoring

Simultaneously monitor up to 30 Nova Controllers and view the PV, SP, and alarm status for all connected controllers. The main view screen also displays the basic model numbers of all connected units. Any series of Nova Controllers with the serial communication option may be monitored with this software.

Simultaneously View Up to 30 Nova Controllers

Remote Set Point Control and Indication

A detailed operation screen for each controller indicates the model number of the controller, the PV, SP, alarm conditions, high or low PV input, and the over limit condition timer. The set point, direction of operation (high or low limit control) and startup relay condition can all be set through this screen.

Data Acquisition

PV and SP data can be logged independently for each unit, and each can have a distinct file name, save location, and logging interval. This data can be graphed using the Data Viewer for quick and clear analysis. Logged data can be exported into spreadsheet format.

Download the Nova Multi-Monitoring Software Free at www.predig.com

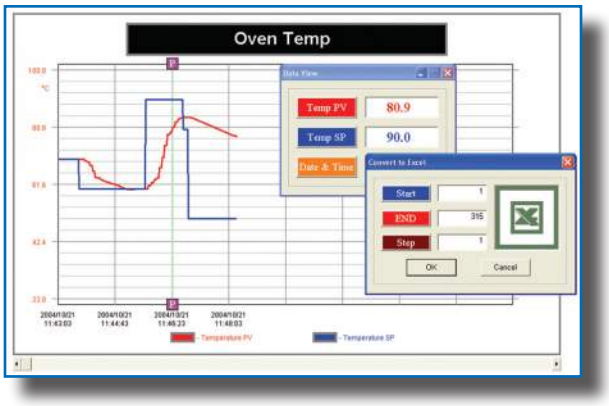

View Logged Data Graphs and Export Data

DIMENSIONS AND PANEL CUTOUTS

Units: inches (mm)

PD570

1/16 DIN (48 x 48)

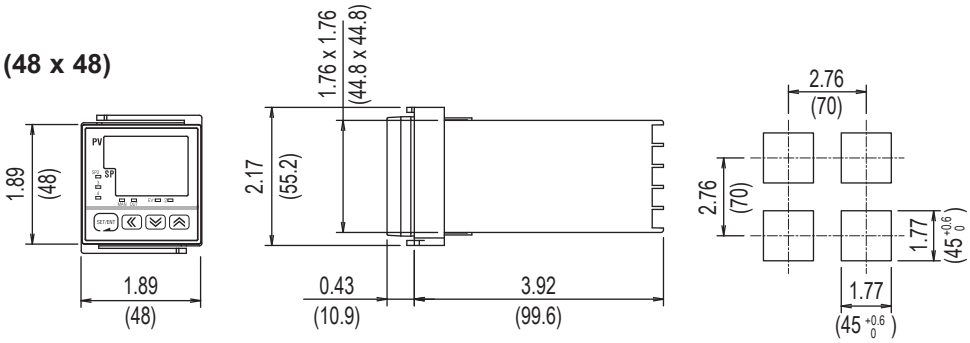

PD578

1/4 DIN (96 x 96)

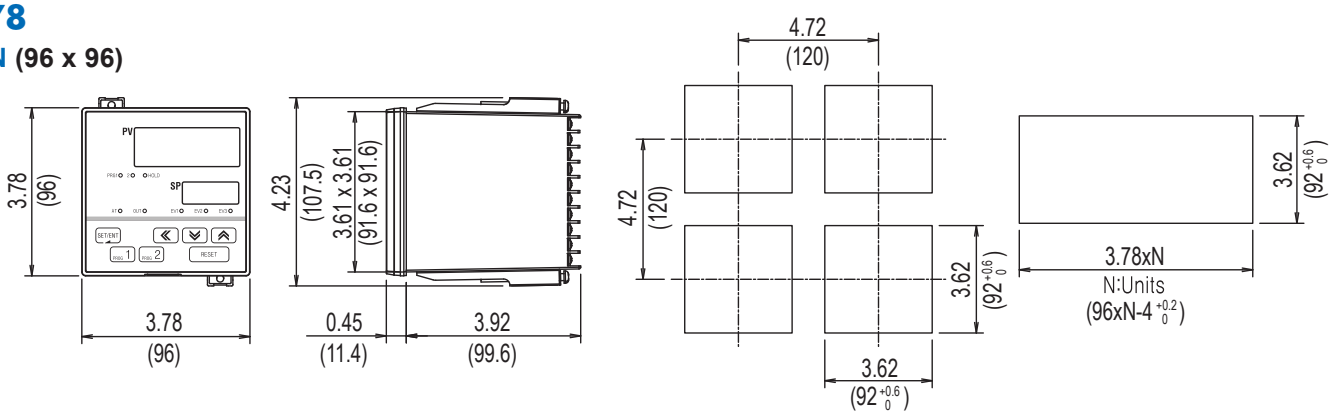

MODEL NUMBER GUIDE

The following guide describes the possible PD570 Series Nova Process & Temperature Limit Controller model numbers. Refer to the price list for the complete list of models and accessories.

P	D	5	7	0	-	6	R	A	-	1	0

Limit Controller

Size - DIN Cutout
- 0 = 1/16 DIN
- 8 = 1/4 DIN

Power
- 6 = 100-240 VAC

Display
- R = Red LED

Main Control Outputs
- A = 1 latching relay & 1 analog output

Options
- 10 = 1 alarm relay
- 14 = 1 alarm relay & RS-485

CONNECTIONS

PD570

: Options

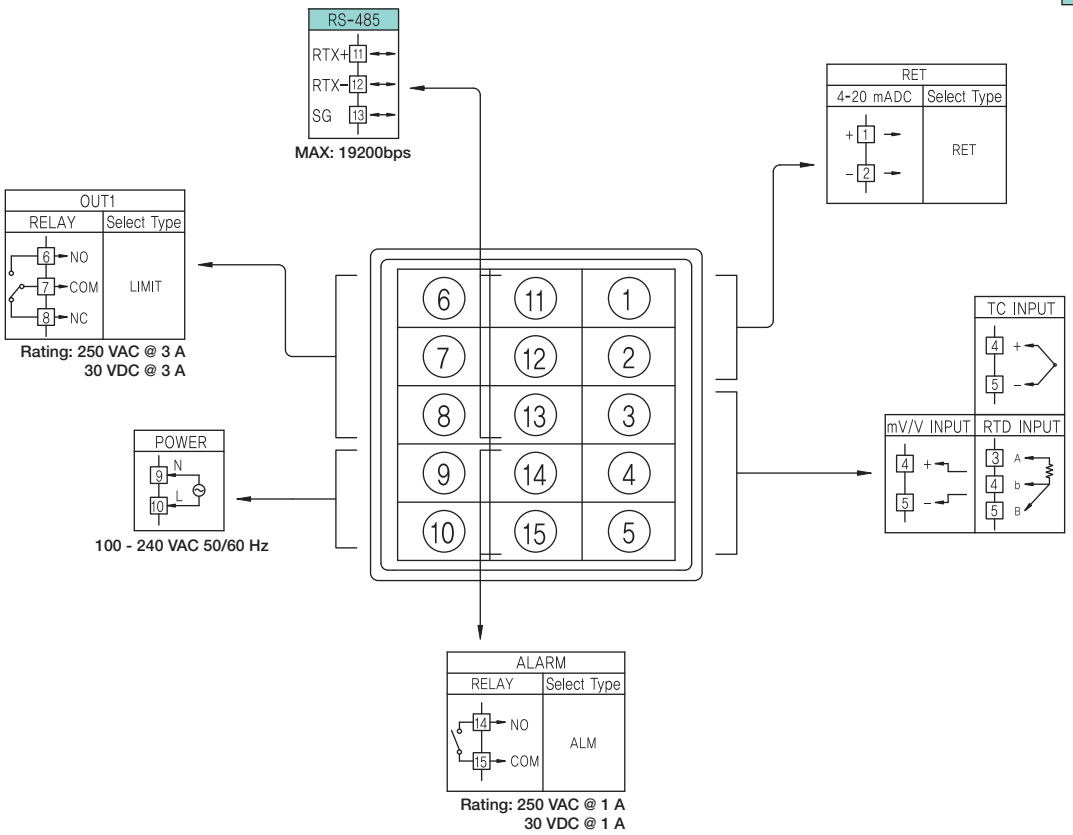

PD578

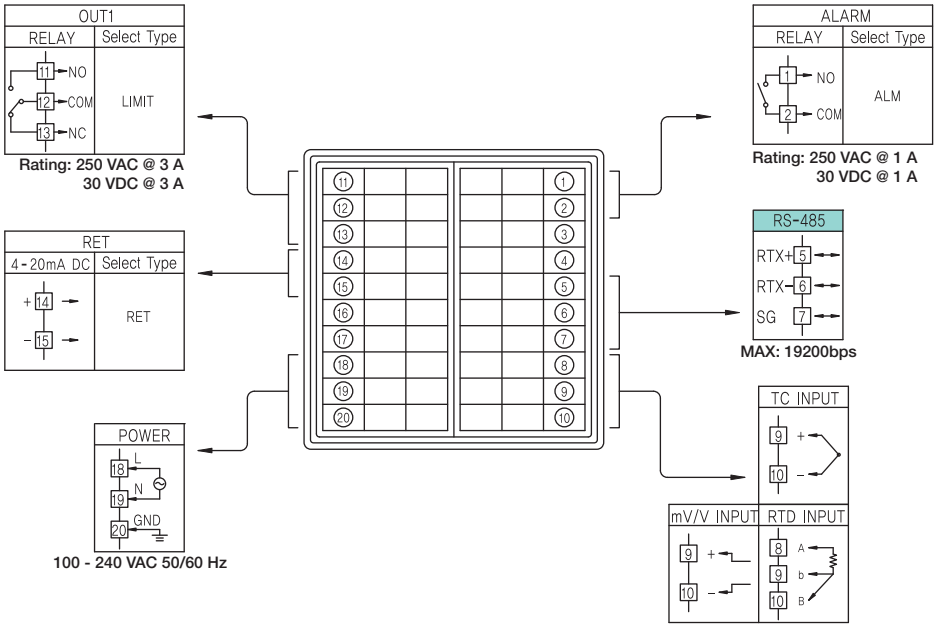

SPECIFICATIONS

Except where noted all specifications apply to operation at +25°C.

General

Display: Dual 4 digits, red LED, -1999 to 9999

DIN Sizes	PV Display Inch (mm)	SP Display Inch (mm)	Weight oz (g)
1/16	0.45 (11.3)	0.37 (9.5)	7.0 (198)
1/4	0.81 (20.5)	0.43 (11.0)	13.9 (394)

Front Panel: Panel gasket provided
1/16 DIN: IP65
1/4 DIN: IP55
Programming Methods: Four front panel buttons and Modbus
Number of Set Points: 1 limit control
Noise Filter: Programmable 1 to 120 seconds, or off
Display Update Rate: 4/second
Max/Min Display: Stored until reset by user or controller is turned off.
Password: Restricts modification of programmed settings.
Non-Volatile Memory: Settings stored for a minimum of 10 years.
Power: 100-240 VAC, 50/60 Hz, 10 W
Required Fuse: UL Recognized, 1 A, 250 V, slow-blow
Isolation: 2300 V input/output-to-power line; 4 kV relay output-to-input/output/power line.
Operating Temperature: 10 to 50°C
Storage Temperature: -40 to 85°C
Relative Humidity: 20 to 90% non-condensing
Enclosure: 1/16, & 1/4 DIN available; impact-resistant plastic; color: black
Approvals: UL & C-UL Recognized, CE Compliant
UL File Number: E244207; Process Control Equipment
Warranty: 3 years parts & labor
Extended Warranty: 1 or 2 years, refer to Price List for details.

Temperature Inputs

Inputs: Factory calibrated, field selectable: J, K, T, E, B, R, S, L, U, N, W, and Platinel II thermocouples and 100 Ω platinum RTD (0.00385 or 0.00392 curve)
Cold Junction Reference: Automatic or off
Offset Adjustment: Four programmable input bias zones
Sensor Break: Up or down scale, user selectable; display reads S.OPN;

Type		Range (ºC)	Range (ºF)	Accuracy*
Thermocouple	K1	-200 to 1370	-300 to 2500	>0ºC: ±0.1% FS ±1 count <0ºC: ±0.2% FS ±1 count
	K2	-199.9 to 999.9	0 to 2300	
	J	-199.9 to 999.9	-300 to 2300	
	T	-199.9 to 400.0	-300 to 750	
	E	-199.9 to 999.9	-300 to 1800	
	B	0 to 1800	32 to 3300	>400ºC: ±0.15% FS ±1 count <400ºC: ±5% FS ±1 count
	R	0 to 1700	32 to 3100	±0.15% FS ±1 count
	S	0 to 1700	32 to 3100	
	L	-199.9 to 900.0	-300 to 1600	>0ºC: ±0.1% FS ±1 count <0ºC: ±0.2% FS ±1 count
	U	-199.9 to 400.0	-300 to 750	
	N	-200 to 1300	-300 to 2400	>0ºC: ±0.1% FS ±1 count <0ºC: ±0.25% FS ±1 count
	W	0 to 2300	32 to 4200	±0.2% FS ±1 count
	Platinel II	0 to 1390	32 to 2500	±0.1% FS ±1 count
RTD	PtA	-199.9 to 850.0	-300 to 1560	±0.1% FS ±1 count
	PtB	-199.9 to 500.0	-199.9 to 999.9	
	PtC	-19.99 to 99.99	-4.0 to 212.0	±0.2% FS ±1 count
	JPtA	-199.9 to 500.0	-199.9 to 999.9	±0.1% FS ±1 count
	JPtB	-150.0 to 150.0	-199.9 to 300.0	

*Performance within recommended operating conditions (10 to 50 ºC, 20 to 90% RH)

Process Inputs

Inputs: Field selectable: 0.4 to 2.0 V, 1 to 5 V, 0 to 10 V, -10 to 20 mV, 0 to 100 mV. 4-20 mA input requires 100 Ω resistor connected across input terminals (order P/N: PDX-RES1).
Accuracy: ±0.1% FS ±1 count
Decimal Point: Up to 3 decimals: 9.999, 99.99, 999.9, or 9999
Calibration: All inputs are calibrated at the factory
Scale Range: User programmable over entire range
Transmitter Supply: 14 to 18 VDC @ 20 mA; available instead of retransmitting analog output; selection is made through the front panel.

Limit Control Relay and Indicators

Ratings: Latching, 1 Form C (SPDT); rated 3 A @ 30 VDC or 3 A @ 250 VAC resistive load
Relay Operation: User may select high or low limit operation, forward or reverse (fail-safe) mode.
Reverse Operation (Fail-Safe): Programmable; relay coil is energized in non-alarm condition. In case of power failure, relay will go to alarm state.
Forward Operation: Relay coil is energized in alarm condition. In case of power failure, relay will go to non-alarm state.
Hysteresis: 0-10% FS, user selectable; manual reset allowed after condition has been corrected.
Out LED: Relay status indicator. LED is on when relay is de-energized (during over limit conditions in reverse operation).
Over Limit LED: Over LED is on when system is in over limit condition. LED will go off once system returns to normal condition.
Over Limit Timer Display: Time stored since last occurrence of over limit condition or until controller is turned off.

Alarm Relay

Ratings: 1 Form A (SPST); rated 1 A @ 30 VDC or 1 A @ 250 VAC resistive load
High/Low Alarm: User may program alarm for absolute value, high or low operation, forward or reverse (fail-safe) mode.
Deviation Alarm: User may program relay for high, low, or high/low range deviation alarm, forward or reverse (fail-safe) mode.
Alarm Deadband: 0-100% FS, user selectable
Alarm Delay: 0 to 99 minutes and 59 seconds
Reverse Operation (Fail-Safe): Programmable; relay coil is energized in non-alarm condition. In case of power failure, relay will go to alarm state.
Forward Operation: Relay coil is energized in alarm condition. In case of power failure, relay will go to non-alarm state.
Auto Alarm Initialization: Normal and standby operation. Normal alarm will reflect the state of the input to the controller at all times. Standby alarm will not trigger if the change to alarm state is a result of power up cycle, set point change, or alarm configuration change.

4-20 mA Retransmitting Output

Scaling Range: 4-20 mA output can be scaled for any display
Accuracy: ±0.1% FS
Power: Internally powered 4-20 mA output
Isolation: 500 V input-to-output
Output Loop Resistance: 600 Ω max

Serial Communications

Compatibility: EIA-485
Protocols: PC, Modbus (ASCII, RTU)
Address: 1 to 99 (Max 31 units connected)
Baud Rate: 600 to 19,200 bps
Transmit Time Delay: 0 to 100 ms
Data: 7 or 8 bit, automatic when using Modbus protocol
Stop Bit: 1 or 2
Parity: None, even, or odd

PRECISION DIGITAL CORPORATION
89 October Hill Rd • Holliston MA 01746 USA • Tel (800) 343-1001 • Fax (508) 655-8990
PRECISION DIGITAL
www.predig.com

Product Catalog Information

Customer:

Enviro-Care

Job Name:

Frederick Winchester, VA

Beast - Septage Receiving Control Panel

Arranged By:

EleMech, Inc.
2275 White Oak Circle
Aurora, IL, 60502

Project Engineer:

Matt Stone

Date:

08/20/19

This page intentionally left blank

Catalog Cuts

E

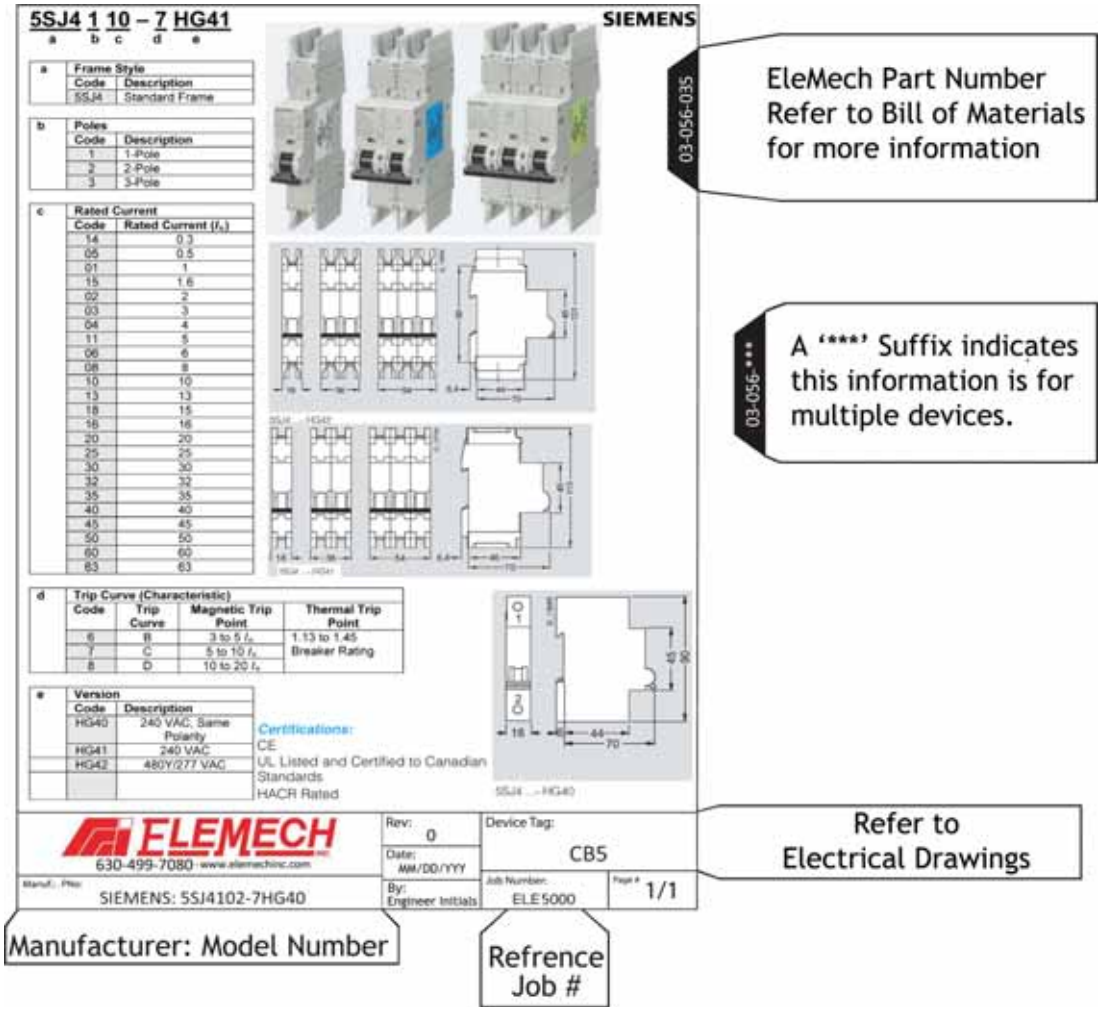

ELEMECH INC. 630-499-7080 · www.elemechinc.com	Rev: 0	Section: E	
	Date: 8/20/2019		
Section Name: Catalog Cuts	By: MBS	Job Number: EVC7837	Page # 1/1

C1.5WH6

PANDUIT

10-069-000

- **Base and covers sold separately**
- Non-slip cover design incorporates integral high friction lining to inhibit cover movement
- Cover flush with base provides greater wire capacity and improves aesthetics
- Easy cover removal makes changes to wiring quick and easy
- Available in various colors

Part Number	C1.5WH6
RoHS Compliancy Status	Compliant
Part Description	Covers duct to protect w ires, improve aesthetics and provides greater w ire capacity. Base and covers sold separately.
Product Type	Type C Cover for Flush Cover Wiring Duct
Material	Lead-Free PVC
Color	White
Length (ft.)	6
Length (m)	1.82
CE Compliant	Yes
Pricing Description	Duct Cover, PVC, 1.5"W X 6', White

C1WH6

PANDUIT

10-069-001

- **Base and covers sold separately**
- Non-slip cover design incorporates integral high friction lining to inhibit cover movement
- Cover flush with base provides greater wire capacity and improves aesthetics
- Easy cover removal makes changes to wiring quick and easy
- Available in various colors

Part Number	C1WH6
RoHS Compliancy Status	Compliant
Part Description	Covers duct to protect wires, improve aesthetics and provides greater wire capacity. Base and covers sold separately.
Product Type	Type C Cover for Flush Cover Wiring Duct
Material	Lead-Free PVC
Color	White
Length (ft.)	6
Length (m)	1.82
CE Compliant	Yes
Pricing Description	Duct Cover, PVC, 1"W X 6', White

Panduit Wiring Duct Approvals and Compliances

C2WH6

PANDUIT

10-069-002

- **Base and covers sold separately**
- Non-slip cover design incorporates integral high friction lining to inhibit cover movement
- Cover flush with base provides greater wire capacity and improves aesthetics
- Easy cover removal makes changes to wiring quick and easy
- Available in various colors

Part Number	C2WH6
RoHS Compliancy Status	Compliant
Part Description	Covers duct to protect wires, improve aesthetics and provides greater wire capacity.
Material	Lead-free PVC
Color	White
Length (ft.)	6
Length (m)	1.82
Pricing Description	Duct Cover, PVC, 2"W X 6', White
Min. Order UOM	FT
Min. Order Qty.	6
BOM Qty. (# of Pkgs.)	

Panduit Wiring Duct Approvals and Compliances

F1.5X3WH6

PANDUIT

10-069-005

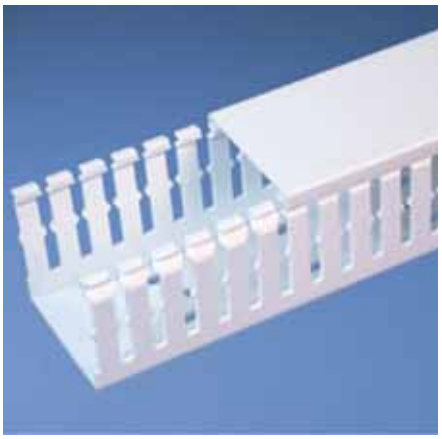

Specifications

- Made of lead-free PVC
- UL Recognized continuous use temperature: 122°F (50°C)
- UL94 Flammability Rating of V-0
- Conforms with NFPA 79-2002 section 14.3.1 requirement for flame retardant material
- Available in Light Gray and White
- Provided with mounting holes

Part Number	F1.5X3WH6
RoHS Compliancy Status	Compliant
Part Description	Narrow finger, slotted wiring duct.
Material	Lead–Free PVC
Color	White
CSA Certified	Yes
Length (ft.)	6
CE Compliant	Yes
CE Marking	Yes
Duct Size W x H (In.)	1.75 x 3.12
Duct Size W x H (mm)	44.5 x 79.2
Mounting Method	Standard Mounting Holes
Pricing Description	Slotted Duct,PVC,1.5"X3"X6',White

F1X3WH6

PANDUIT

10-069-007

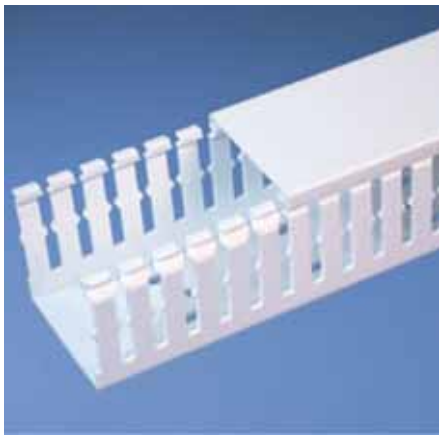

Specifications

- Made of lead-free PVC
- UL Recognized continuous use temperature: 122°F (50°C)
- UL94 Flammability Rating of V-0
- Conforms with NFPA 79-2002 section 14.3.1 requirement for flame retardant material
- Available in Light Gray and White
- Provided with mounting holes

Part Number	F1X3WH6
RoHS Compliancy Status	Compliant
Part Description	Narrow finger, slotted wiring duct.
Material	Lead–Free PVC
Color	White
CSA Certified	Yes
Length (ft.)	6
CE Compliant	Yes
CE Marking	Yes
Duct Size W x H (In.)	1.26 x 3.12
Duct Size W x H (mm)	32.0 x 79.2
Mounting Method	Standard Mounting Holes
Pricing Description	Slotted Duct,PVC,1"X3"X6',White

Panduit Wiring Duct Approvals and Compliances

F2X3WH6

PANDUIT

10-069-008

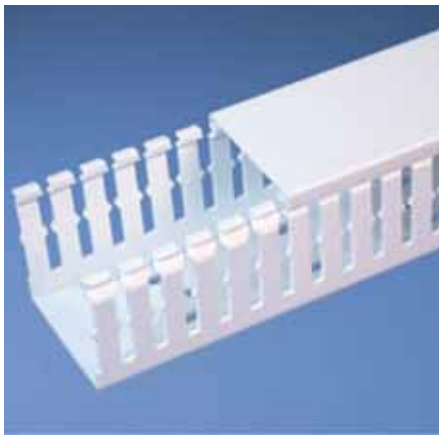

Specifications

- Made of lead-free PVC
- UL Recognized continuous use temperature: 122°F (50°C)
- UL94 Flammability Rating of V-0
- Conforms with NFPA 79-2002 section 14.3.1 requirement for flame retardant material
- Available in Light Gray and White
- Provided with mounting holes

Part Number	F2X3WH6
RoHS Compliancy Status	Compliant
Part Description	Narrow finger, slotted wiring duct.
Material	Lead–Free PVC
Color	White
CSA Certified	Yes
Length (ft.)	6
CE Marking	Yes
Duct Size W x H (In.)	2.25 x 3.12
Duct Size W x H (mm)	57.2 x 79.2
Mounting Method	Standard Mounting Holes
Pricing Description	Slotted Duct,PVC,2"X3"X6',White
Slot Width (In.)	0.20
Slot Width (mm)	5.0

DIN RAILS

IBOCO Integrated Panel Management

42-063-007

Catalog Number	Lengths per Pack
G1	12
G1F	12
G1F1	24
OMEGA 2F	20
OMEGA 2F1	40*
OMEGA 3	20
OMEGA 3F	20
OMEGA 3F1	40*
OMEGA 3FD	20
OMEGA 3A	10
OMEGA 3AF	10
OMEGA 3AF1	20*
OMEGA 3AFD	10
OMEGA 3B	10
OMEGA 3B1	10*
OMEGA 75	2

Treated with galvanic zinc plating and passivation (gal Zn 8c according to Din 50960)
Minimum thickness 6 microns
Standard length: 2 meters (6'6¾")

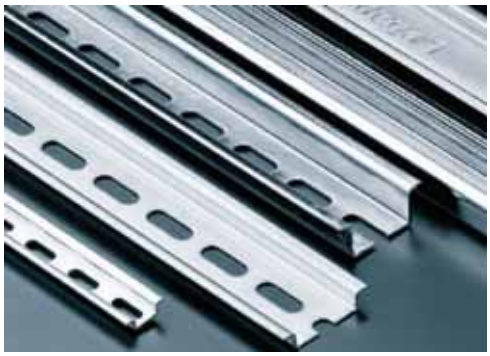

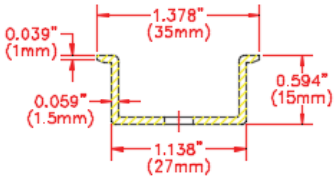

FRONT SECTION

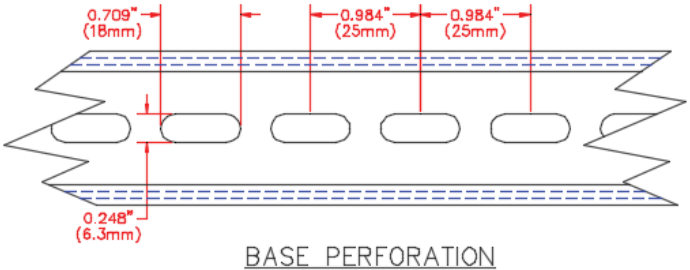

BASE PERFORATION

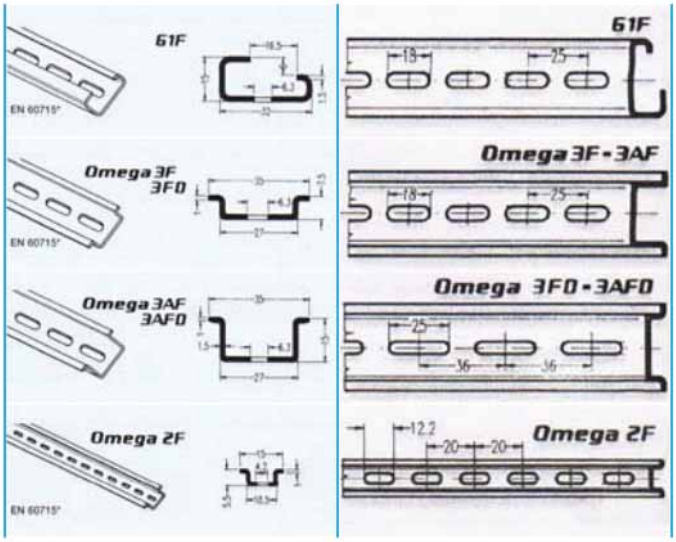

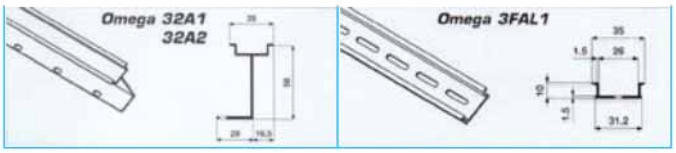

ELEMECH INC. 630-499-7080 · www.elemechinc.com	Rev: 0	Device Tag:
	Date: 8/20/2019	
Manuf.: . PNo: Iboco: Omega 3 AF	By: MBS	Job Number: EVC7837
		Page # 1/1

Wire – MTW Type

51-000-062

CONDUCTORS:
- 22 AWG - 8AWG Stranded Tinned Copper per ASTM B-33
- 22 AWG - 10 AWG Solid Tinned Copper per ASTM M-33

INSULATION:
- Color-Coded Polyvinyl Chloride (PVC)

TEMPERATURE RANGE/ VOLTAGE RATING:
- UL 1011/1015/1028/BC-5W2: 105°C/600V
- UL MTW: 90°C/600V
- CSA AWM I A/B & TEW: 105°C/600V

FLAME COMPLIANCES:
- UL VW-1
- CSA FT-1

INDUSTRY APPROVALS:
- UL Standard 758 - Styles 1011/1015/1028/1032/1230/1231/1335/1344
- UL Standard 1063 - MTW
- UL Standard 1426 - BC-5W2: 16 AWG - 8 AWG
- CSA AWM I A/B & TEW
- UL THHW
- UL CT Tray Rated
- SAE J378

STANDARD COLORS:
- Black, Orange, Blue, Violet, White, Yellow, Brown, Green/Yellow, Red, Green, Gray

OPTIONS:
- Stripes available upon request (minimums may apply)
- Other copper constructions available upon request (minimums may apply)

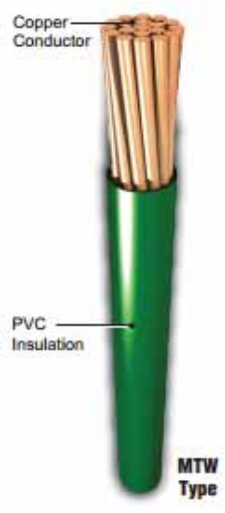

Catalog Number	Description
F22027	22 AWG (7/.0096) TC AWM 1015
F20037	20 AWG (10/30) TC AWM 1015
F18054	18 AWG (16/30) TC AWM 1015
F16032	16 AWG (26/30) TC AWM 1015
F14037	14 AWG (41/30) TC AWM 1015
F12024	12 AWG (65/30) TC AWM 1015
F10012	10 AWG (105/30) TC AWM 1015
F08010	8 AWG (7X19/29) TC AWM 1028

TEW/MTW Wire (Tinned Copper) Applications:

- This tinned copper hook up wire may be used for wiring of machine tools, appliances, and control cabinets.

UL LISTED

Multi 9

Schneider Electric

03-058-119

UL 489 / CSA C22.2 No 5 / IEC/EN 60947-2 / GB 14048-2

C60BP are multi-standard miniature circuit breakers and branch circuit protection as defined by UL 489. It combines following functions:

- circuit protection against short-circuit currents
- circuit protection against overload currents
- tripping and fault indication by the addition of auxiliaries.

Number of 18 mm (0.71 in.) poles	Rating (A) 25°C/77°F	Breaking capacity (kA rms) AIR UL 489 / CSA C22.2 No 5				Icu IEC 60947-2			
	Voltage (Ue)	277 V ∿	240 V ∿	120 V ∿	60 V ⎓	440 V ∿	415 V ∿	240 V ∿	60 V ⎓
1P	0.5 to 35	10	14	14	10	-	3	10	20
	40 to 63	-	10	10	10	-	3	10	20
	Voltage (Ue)	480Y/277 V ∿		240 V ∿	125 V ⎓	440 V ∿	415 V ∿	240 V ∿	125 V ⎓
2P	1 to 25	10		14	10	6	10	20	-
	30 to 35	10		14	-	6	10	20	-
3P	1 to 35	10		14	-	6	10	20	-
2P/3P	40 to 63	-		10	-	6	10	20	-

Electrical diagrams

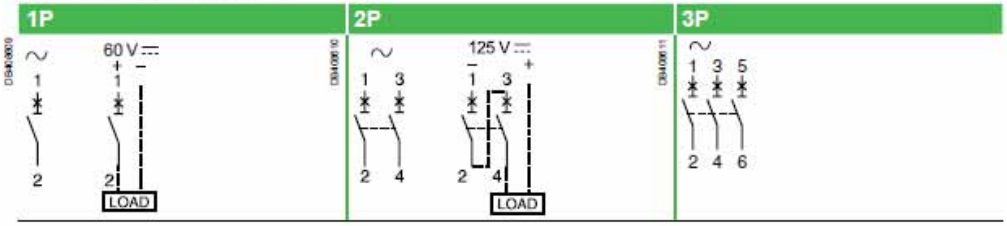

Catalogue numbers

Tunnel terminal connection

Type	UL489 and CSA voltages	1P				2P			3P		
Auxiliaries		Remote indication and tripping, see page 43									
Rating (In)		Curve Z	C	D (=K)	Width in 9 mm modules	Curve C	D (=K)	Width in 9 mm modules	Curve C	D (=K)	Width in 9 mm modules
C60BP											
0.5	480Y/277 V and 240 V	M9F44170	M9F42170	M9F43170	2	-	-	4	-	-	6
1		M9F44101	M9F42101	M9F43101		M9F42201	M9F43201		M9F42301	M9F43301	
2		M9F44102	M9F42102	M9F43102		M9F42202	M9F43202		M9F42302	M9F43302	
3		M9F44103	M9F42103	M9F43103		M9F42203	M9F43203		M9F42303	M9F43303	
4		M9F44104	M9F42104	M9F43104		M9F42204	M9F43204		M9F42304	M9F43304	
5		M9F44105	M9F42105	M9F43105		M9F42205	M9F43205		M9F42305	M9F43305	
6		M9F44106	M9F42106	M9F43106		M9F42206	M9F43206		M9F42306	M9F43306	
8		M9F44108	M9F42108	M9F43108		M9F42208	M9F43208		M9F42308	M9F43308	
10		M9F44110	M9F42110	M9F43110		M9F42210	M9F43210		M9F42310	M9F43310	
15		M9F44115	M9F42115	M9F43115		M9F42215	M9F43215		M9F42315	M9F43315	
20		M9F44120	M9F42120	M9F43120		M9F42220	M9F43220		M9F42320	M9F43320	
25		M9F44125	M9F42125	M9F43125		M9F42225	M9F43225		M9F42325	M9F43325	
30		M9F44130	M9F42130	M9F43130		M9F42230	M9F43230		M9F42330	M9F43330	
35		M9F44135	M9F42135	M9F43135		M9F42235	M9F43235		M9F42335	M9F43335	
40	240 V only	M9F44140	M9F42140	M9F43140	2	M9F42240	M9F43240	4	M9F42340	M9F43340	6
45		M9F44145	M9F42145	M9F43145		M9F42245	M9F43245		M9F42345	M9F43345	
50		M9F44150	M9F42150	M9F43150		M9F42250	M9F43250		M9F42350	M9F43350	
63		M9F44163	M9F42163	M9F43163		M9F42263	M9F43263		M9F42363	M9F43363	

Weight (g / oz)

Circuit-breaker	
Type	C60BP
1P	130 g / 4.58 oz
2P	260 g / 9.17 oz
3P	390 g / 13.76 oz

Dimensions (mm / inches)

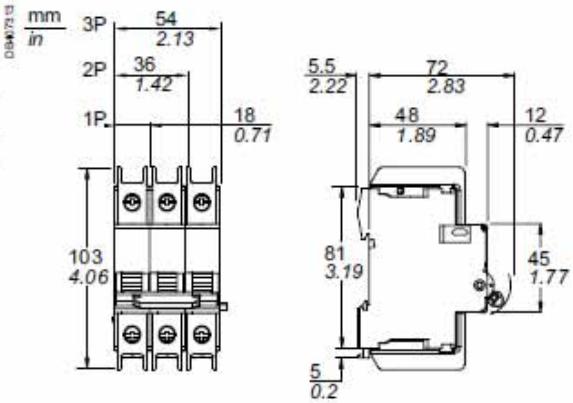

C60BPTunnel terminal

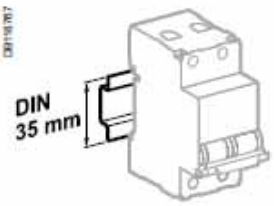

Clip on DIN rail 35 mm.

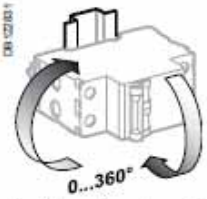

Indifferent position of installation.

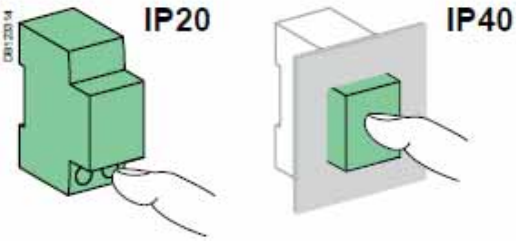

Technical data

Main characteristics			
Insulation voltage (Ui)			500 V
Service breaking capacity (Ics)		In alternating current	75 % of Icu
		In direct current	100 % of Icu
Pollution degree			3
Rated impulse withstand voltage (Uimp)			6 kV
Thermal tripping	Reference temperature		25°C / 77°F
Magnetic tripping	Z curve	In alternating current	3 In ± 20 %
		In direct current	4.2 In ± 20 %
	C curve	In alternating current	8.5 In ± 20 %
		In direct current	12 In ± 20 %
	D curve (=K curve)	In alternating current	12 In ± 20 %
		In direct current	17 In ± 20 %

Additional characteristics		
Degree of protection (IEC 60529)	Device only	IP20
	Device in modular enclosure	IP40 Insulation class II
Endurance (O-C)	Electrical	10,000 cycles
	Mechanical	20,000 cycles
Operating temperature		-30°C to +70°C / -22°F to 158°F
Storage temperature		-40°C to +80°C / -40°F to 176°F
Tropicalization (IEC 60068-1)		Treatment 2 (relative humidity 95 % at 55°C / 131°F)
Dissipated power		See page 68

DataTuff Industrial Ethernet Cord Sets (RJ45). Cat 5e 4-Pair, 24 AWG – Heavy Duty Oil- & Sunlight-Resistant Black Jackets

IP67 interface complies with the EtherNet/IP specification (IEC 61076-3-106 Variant 1)

BELDEN

57-009-008

- **Cord Sets (RJ45)**
  Cat 6 or Cat 5e UTP or FTP with solid 24 AWG conductors and industrial-grade sunlight/oil resistant jackets. Suitable for use in IP67 or IP20 installations.

IP20 Cord Set

Shielded with Solid Conductors (ref: Belden Bonded-Pair Cable 7929A)
Cable Rating NEC: CMR, CMX-Outdoor CEC: CMR FT4. MSHA

Belden Part No.	IP Rating	Length meters (Ft.)	Tethered Cap	Package Quantity
E504001 010S1	IP67	1 m (3.3 ft.)	Yes	1
E504002 010S1	IP67	2 m (6.6 ft.)	Yes	1
E504003 010S1	IP67	3 m (9.8 ft.)	Yes	1
E504005 010S1	IP67	5 m (16.4 ft.)	Yes	1
E504025 010S1	IP67	25 m (82 ft.)	Yes	1
E505001 010S1	IP20	1 m (3.3 ft.)	–	1
E505002 010S1	IP20	2 m (6.6 ft.)	–	1
E505003 010S1	IP20	3 m (9.8 ft.)	–	1
E505005 010S1	IP20	5 m (16.4 ft.)	–	1

General Description:

2 meter (6.6 ft.), Shielded with solid conductors (ref: Belden Bonded-Pair Cable 7958A). Cable Rating NEC: CMR, CMX-Outdoor. CEC: CMR FT4. MSHA. 600V AWM Rated.

Item #	Putup	Ship Weight	Color	Notes	Item Desc
E505002 010S1	1 EA	0.226 LB	BLACK		CORDSET IP20 C6A FTP SO 2M BK

General Description:

2 meter (6.6 ft.), Shielded with solid conductors (ref: Belden Bonded-Pair Cable 7953A). Cable Rating NEC: CMR. CEC: CMR FT4. 600V AWM Rated.

Applicable Specifications and Agency Compliance (Overall)

Applicable Standards & Environmental Programs

EU Directive 2002/95/EC (RoHS):	Yes
EU RoHS Compliance Date (mm/dd/yyyy):	01/01/2006
MII Order #39 (China RoHS):	EUP 50

Notes (Overall)

Notes: For additional information about this product, visit our web site at http://www.belden.com

Cable

Description:	4 pair, 23 AWG bare copper, Polyolefin Insulation, Bonded pairs, Overall Beldfoil® Shield, Industrial Grade PVC, Oil Res, Sun Res, CMR, FT4. 600V AWM Rated.
Part Number:	7953A
Shielding:	Aluminum Foil-Polyester Tape
Electrical Performance:	Category 6A
Maximum Operating Voltage:	300 V RMS (600 V AWM Rated)
Applicable Standards:	ANSI/TIA-568-C.2, ISO/IEC 11801, EtherNet/IP(tm) Specification, UL 1666 Riser

ELEMECH INC.
630-499-7080 · www.elemechinc.com

Rev: 0	Device Tag: CBL2		
Date: 8/20/2019			
Manuf.: . PNo: Belden: E505002-010S1	By: MBS	Job Number: EVC7837	Page # 1/1

Zelio® Plug-in Relays
RXM

Telemecanique

06-058-011

RXM•AB2F7

RXM Miniature Relays (page 4)

2 pole relays; 12 A, 1/2 hp (IEC rating = 12 A)
3 pole relays; 10 A, 1/3 hp (IEC rating = 10 A)
4 pole relays; 8 A, 1/3 hp (IEC rating = 6 A)
4 pole relays; 3 A (low level), 1/16 hp (IEC rating = 3 A)

- Mechanical "relay status" indicator on all relays
- Pilot light option available
- Manual operator optional for all relays
- Built-in marking area

Insulation characteristics

Rated insulation voltage (Ui)		250 V (IEC), 300 V (UL, CSA)
Rated impulse withstand voltage (Uimp)		3.6 kV (1.2/50 µs)
Dielectric strength (rms voltage)	Between coil and contact	2,500 Vac
	Between poles	2,500 Vac
	Between contacts	1,500 Vac

Contact characteristics

Relay type			**RXM2AB•••**	**RXM3AB•••**	**RXM4AB•••**
Number and type of contacts (see page 12)			DPDT	3PDT	4PDT
Contact materials			AgNi		
Conventional thermal current (Ith)	For ambient temperature ≤ 131 °F (55 °C)		12 A	10 A	6 A
Rated operational current	Conforming to IEC in utilization category AC-1	N.O.	12 A	10 A	6 A
		N.C.	6 A	5 A	3 A
	Conforming to UL Resistive @277 Vac, hp @120 Vac		12 A, 1/2 hp	10 A, 1/3 hp	8 A, 1/3 hp
Maximum operating rate In operating cycles/hour	No load		18,000		
	Under load		1,200		
Switching voltage	Maximum		250 Vac/Vdc		
Switching capacity	Minimum		10 mA on 17 V		
	Maximum		3,000 VA	2,500 VA	1,500 VA
Utilization coefficient			20%		
Mechanical durability in millions of operating cycles			10		
Electrical durability in millions of operating cycles	Resistive load		0.1		

Coil characteristics

Average consumption		AC	1.2 VA
		DC	0.9 W
Drop-out voltage threshold		AC	≥ 0.15 Uc
		DC	≥ 0.1 Uc
Operating time (response time)	Between coil energization and making of the N.O. contact	AC	20 ms
		DC	20 ms
	Between coil de-energization and making of the N.C. contact	AC	20 ms
		DC	20 ms

Coil voltage Uc			**12 V**	**24 V**	**48 V**	**110 V**	**120 V**	**125 V**	**220 V**	**230 V**	**240 V**
Relay coil voltage codes			**JD**	**BD**	**ED**	**FD**	—	**GD**	**MD**	—	—
DC	Average resistance at 68 °F (20 °C) ± 10%		160 Ω	650 Ω	2,600 Ω	11,000 Ω	—	11,000 Ω	14,000 Ω	—	—
	Operating voltage limits	Min.	9.6 V	19.2 V	38.4 V	88 V	—	100 V	176 V	—	—
		Max.	13.2 V	26.4 V	52.8 V	121 V	—	138 V	242 V	—	—
Relay coil voltage codes			—	**B7**	**E7**	—	**F7**	—	**M7**	**P7**	**U7**
AC	Average resistance at 68 °F (20 °C) ± 15%		—	180 Ω	770 Ω	—	4,430 Ω	—	15,000 Ω	15,000 Ω	15,500 Ω
	Operating voltage limits	Min.	—	19.2 V	38.4 V	—	96 V	—	176 V	184 V	192 V
		Max.	—	26.4 V	52.8 V	—	132 V	—	242 V	253 V	264 V

Environment

Dielectric strength	2000 V AC (between poles) 2000 V AC (between coil and contact) 1300 V AC (between contacts)
Product certifications	CSA GOST Lloyds UL
Standards	EN/IEC 61810-1 UL 508 CSA C22.2 No 14

Telemecanique

06-058-011

Miniature relays with lockable test button, without LED

Coil Voltage	Number and type of contacts - Thermal current (Ith)								
	DPDT - 12 A			3PDT - 10 A			4PDT - 6 A		
	Catalog Number	Weight		Catalog Number	Weight		Catalog Number	Weight	
		lb.	kg		lb.	kg		lb.	kg
12 Vdc	RXM2AB1JD	0.082	0.037	RXM3AB1JD	0.084	0.038	RXM4AB1JD	0.080	0.036
24 Vdc	RXM2AB1BD	0.082	0.037	RXM3AB1BD	0.084	0.038	RXM4AB1BD	0.080	0.036
48 Vdc	RXM2AB1ED	0.082	0.037	RXM3AB1ED	0.084	0.038	RXM4AB1ED	0.080	0.036
110 Vdc	RXM2AB1FD	0.082	0.037	RXM3AB1FD	0.084	0.038	RXM4AB1FD	0.080	0.036
220 Vdc	—	—	—	—	—	—	RXM4AB1MD	0.080	0.036
24 Vac	RXM2AB1B7	0.082	0.037	RXM3AB1B7	0.084	0.038	RXM4AB1B7	0.080	0.036
48 Vac	RXM2AB1E7	0.082	0.037	RXM3AB1E7	0.084	0.038	RXM4AB1E7	0.080	0.036
120 Vac	RXM2AB1F7	0.082	0.037	RXM3AB1F7	0.084	0.038	RXM4AB1F7	0.080	0.036
230 Vac	RXM2AB1P7	0.082	0.037	RXM3AB1P7	0.084	0.038	RXM4AB1P7	0.080	0.036
240 Vac	—	—	—	—	—	—	RXM4AB1U7	0.080	0.036
Miniature relays with lockable test button, with LED									
12 Vdc	RXM2AB2JD	0.082	0.037	RXM3AB2JD	0.084	0.038	RXM4AB2JD	0.080	0.036
24 Vdc	RXM2AB2BD	0.082	0.037	RXM3AB2BD	0.084	0.038	RXM4AB2BD	0.080	0.036
48 Vdc	RXM2AB2ED	0.082	0.037	RXM3AB2ED	0.084	0.038	RXM4AB2ED	0.080	0.036
110 Vdc	RXM2AB2FD	0.082	0.037	RXM3AB2FD	0.084	0.038	RXM4AB2FD	0.080	0.036
125 Vdc	—	—	—	—	—	—	RXM4AB2GD	0.080	0.036
24 Vac	RXM2AB2B7	0.082	0.037	RXM3AB2B7	0.084	0.038	RXM4AB2B7	0.080	0.036
48 Vac	RXM2AB2E7	0.082	0.037	RXM3AB2E7	0.084	0.038	RXM4AB2E7	0.080	0.036
120 Vac	RXM2AB2F7	0.082	0.037	RXM3AB2F7	0.084	0.038	RXM4AB2F7	0.080	0.036
230 Vac	RXM2AB2P7	0.082	0.037	RXM3AB2P7	0.084	0.038	RXM4AB2P7	0.080	0.036

Miniature relays

RXM2●●●●● RXM3●●●●● RXM4●●●●●

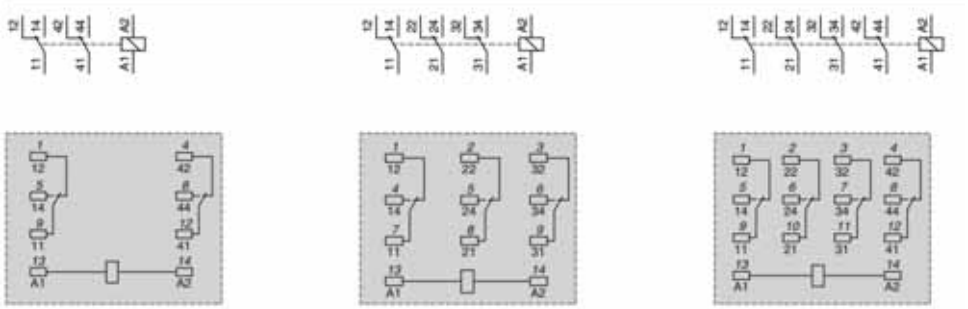

Resistive load AC

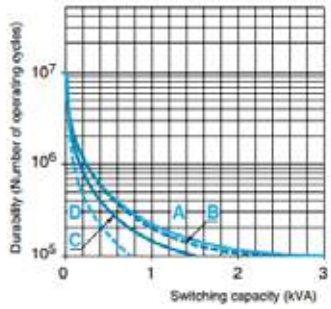

RXM ●●●●●● — Common view | RXM 2 — Pin side view | RXM 3 | RXM 4

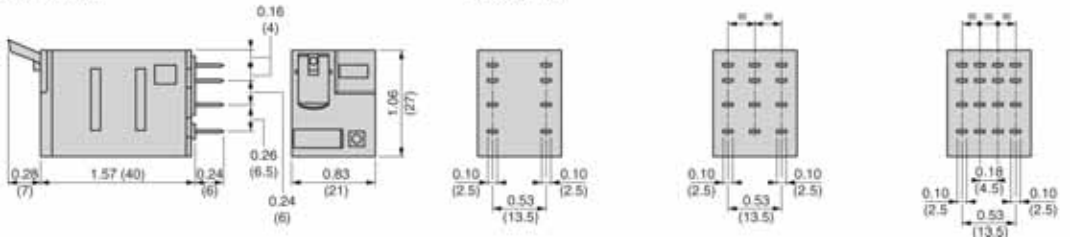

ELEMECH INC. 630-499-7080 · www.elemechinc.com	Rev: 0	Device Tag: CR1-15	
	Date: 8/20/2019		
Manuf.: . PNo: Square D: RXM3AB2F7	By: MBS	Job Number: EVC7837	Page # 2/2

RXZS2

bus jumper for Zelio Relay RXZ sockets with separate contacts

06-058-012

Main

Commercial Status	Commercialised
Range of product	Zelio Relay
Accessory / separate part type	Jumper
Accessory / separate part designation	Bus jumper
Sale per indivisible quantity	10

Complementary

Product compatibility	Socket RXZ
Accessory / separate part destination	All RXZ sockets with separate contacts
[Ith] conventional free air thermal current	5 A
Product weight	0.005 kg

Ordering and shipping details

Category	21128 - ZELIO ICE CUBE RELAY ACCESSORIES
Discount Schedule	CP2
GTIN	00785901924098
Nbr. of units in pkg.	10
Package weight(Lbs)	0.01
Stock Code	Stock - Normally stocked in distribution facility
Returnability	Y
Country of origin	CN

Sockets

Telemecanique

38-058-003

RXZE2S108M

Complementary

[Ith] conventional free air thermal current	12 A 5 A with bus jumper
[Ue] rated operational voltage	< 250 V
Tightening torque	<= 1 N.m (M3 screw(s))
Fixing mode	By screw mounting on panel Clip-on mounting on 35 mm symmetrical DIN rail
Marking	CE
Width	27 mm
Product weight	0.058 kg 0.07 kg

Environment

Standards	IEC 61984
Product certifications	CSA UL
Ambient air temperature for storage	-40...85 °C
Ambient air temperature for operation	-40...55 °C
IP degree of protection	IP20 conforming to EN/IEC 60529
Dielectric strength	2500 V
RoHS EUR status	Compliant
RoHS EUR conformity date	0801

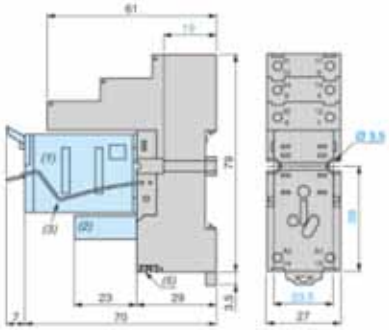

1 Relay
2 Protection Module
3 Carriage Stirrup
5 2 Links connection

Approvals for Sockets:

RXZE2S111M

Complementary

[Ith] conventional free air thermal current	10 A 5 A with bus jumper
[Ue] rated operational voltage	< 250 V
Tightening torque	<= 1 N.m (M3 screw(s))
Fixing mode	By screw mounting on panel Clip-on mounting on 35 mm symmetrical DIN rail
Marking	CE
Width	27 mm
Product weight	0.066 kg

Environment

Standards	IEC 61984
Product certifications	CSA UL
Ambient air temperature for storage	-40...85 °C
Ambient air temperature for operation	-40...55 °C
IP degree of protection	IP20 conforming to EN/IEC 60529
Dielectric strength	2500 V
RoHS EUR status	Compliant
RoHS EUR conformity date	0801

Dimensions

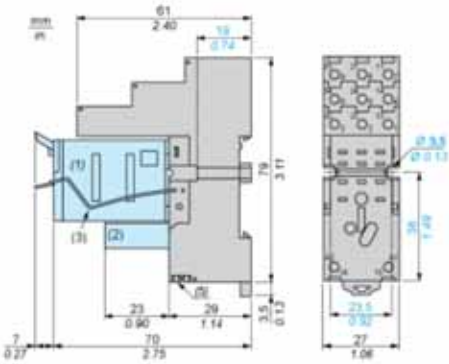

(1) Relays
(2) Protection module
(3) Maintaining clamp
(4) 2 elongated holes Ø 3.5 mm x 6.5 mm / Ø 0.13 in. x 0.25 in.
(5) 2 bus jumpers

Approvals for Sockets:

RXZE2S114M

Complementary

[Ith] conventional free air thermal current	10 A 5 A with bus jumper
[Ue] rated operational voltage	< 250 V
Tightening torque	<= 1 N.m (M3 screw(s))
Fixing mode	By screw mounting on panel Clip-on mounting on 35 mm symmetrical DIN rail
Marking	CE
Width	27 mm
Product weight	0.058 kg 0.07 kg

Environment

Standards	IEC 61984
Product certifications	CSA UL
Ambient air temperature for storage	-40...85 °C
Ambient air temperature for operation	-40...55 °C
IP degree of protection	IP20 conforming to EN/IEC 60529
Dielectric strength	2500 V
RoHS EUR status	Compliant
RoHS EUR conformity date	0801

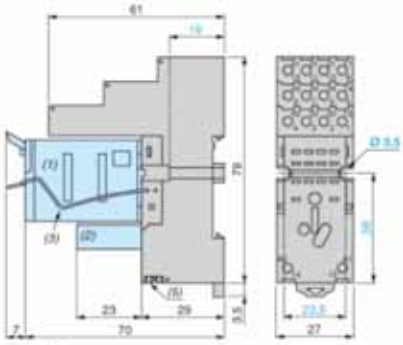

1 Relay
2 Protection Module
3 Carriage Stirrup
5 2 Links connection

Approvals for Sockets:

ELEMECH INC. 630-499-7080 · www.elemechinc.com	Rev: 0	Device Tag: CR1-15
	Date: 8/20/2019	
Manuf.: . PNo: Square D: RXZE2S111M	By: MBS	Job Number: EVC7837
		Page # 1/1

Item No. 57.504.9055.0

wieland

Earth terminal WK 4 SL/ U /V0

Ground DIN rail terminal block with screw connection for mounting on TS 35 and TS 32, nominal cross section 4 mm², width 6 mm, color green/yellow

42-063-004

Rated impulse voltage	8 kV
Pollution degree	3
Closing plate required	No
Length	51 mm
Type of insulation material	Thermoplastic
Cross section UL	22-10 AWG
Cross section CSA	20-10 AWG
Maximum cross section fine stranded	4 mm²
Wire strip length	9 mm
Torque conductor mounting	0.5 Nm
Torque rail mounting	0,5

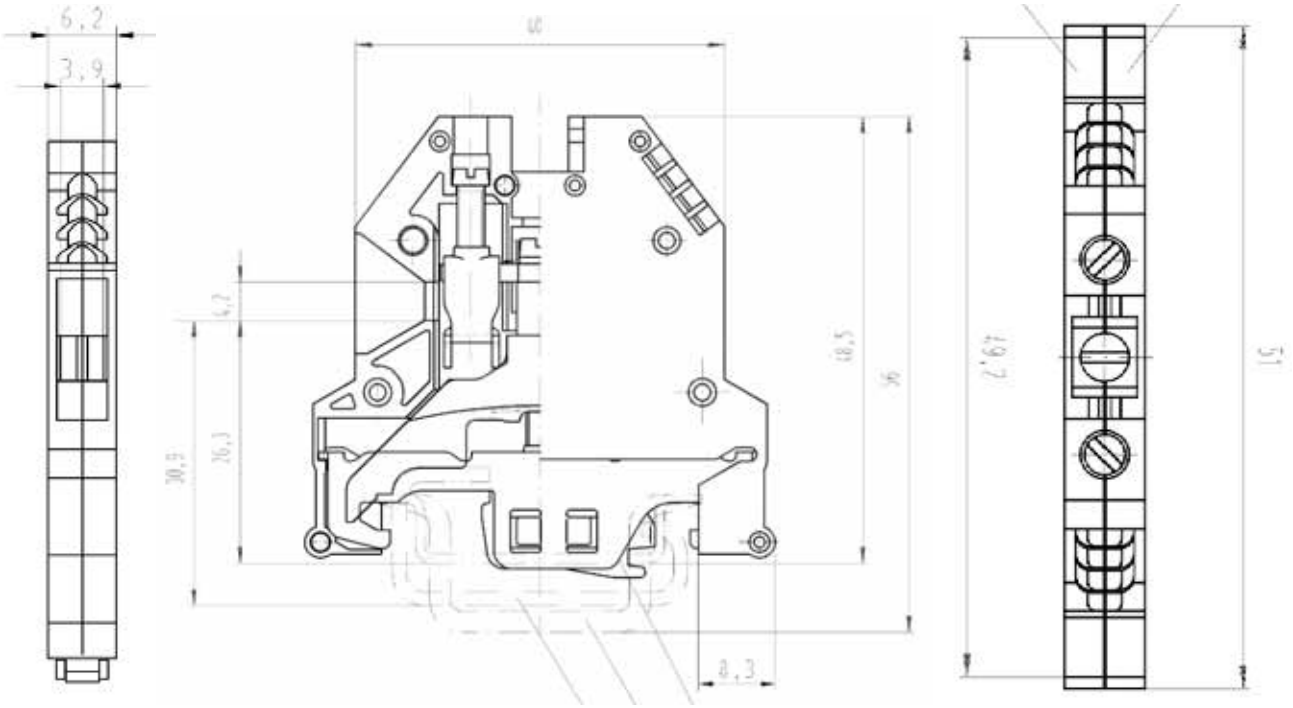

ELEMECH INC.
630-499-7080 · www.elemechinc.com

Rev: 0	Device Tag: DB,TB		
Date: 8/20/2019			
Manuf.: . PNo: Wieland: 57.504.9055.0	By: MBS	Job Number: EVC7837	Page # 1/1

wieland

General Data

Part No: 07.311.4053.1
Description: End Cover – Black
Type of end plate – Yes
Snap in - Yes
Inflammability Class of insulation material acc. With UL94 – V0

07-063-000

ELEMECH INC. 630-499-7080 · www.elemechinc.com	Rev: 0	Device Tag: DB1	
	Date: 8/20/2019		
Manuf.: . PNo: Wieland: 07.311.4053.1	By: MBS	Job Number: EVC7837	Page # 1/1

Cross connectors, (jumper bars) uninsulated

wieland

07-063-001

Type	Part no.	Std. pack
WKM 4/15	**6 mm spacing Screw: M 3**	
2pole 9215 - 2	Z7.210.3227.0	50
3pole 9215 - 3	Z7.210.3327.0	50
4pole 9215 - 4	Z7.210.3427.0	50
5pole 9215 - 5	Z7.210.3527.0	50
6pole 9215 - 6	Z7.210.3627.0	50
70pole 9215 M-70	Z7.210.3027.0	10

General

Colour	Other
Type	Cross connector
Modular spacing	6 mm
Number of bridged clamps	4
Mounting method	Screwable
Insulated	No

Accessories

Type	Cross connector
Mounting method	Screwable
Insulated	No
Colour	Other
Number of bridged clamps	4
Modular spacing	6 mm

ELEMECH INC. 630-499-7080 · www.elemechinc.com	Rev: 0	Device Tag: DB1	
	Date: 8/20/2019		
Manuf.: . PNo: Wieland: Z7.210.3427	By: MBS	Job Number: EVC7837	Page # 1/1

07-063-002

wieland

Multi-tier blocks with screw connection

selos 10S

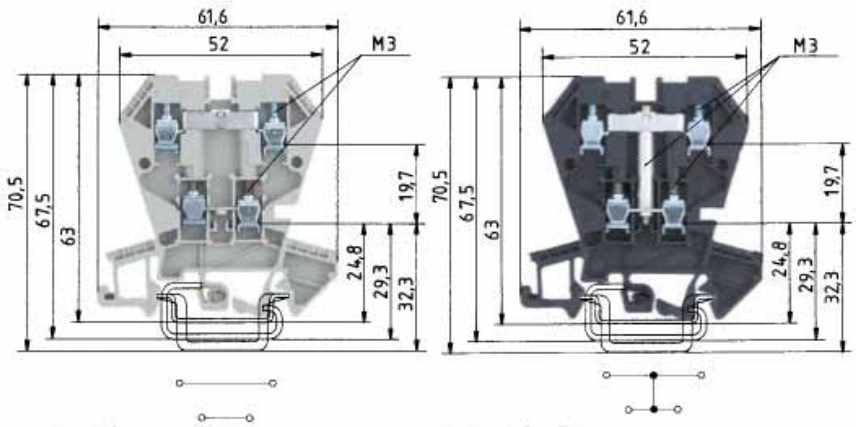

0344 Ex II 2GD IM2
Ex e I/II
EN 60947-7-1:2002
EN 60947-7-2:2002

		WK 4 E/U				WK 4 E/U /VB			
		fine-stranded	solid	V	A	fine-stranded	solid	V	A
		0.5-4mm²	0.5-4mm²	400V/6kV/3[3]	32	0.5-4mm²	0.5-4mm²	400V/6kV/3	32
UL ratings	Field/factory wiring	No. 22-10 AWG		300V	20	No. 22-10 AWG		300V	20
CSA ratings		No. 20-12 AWG		300V	10	No. 20-12 AWG		300V	10
KEMA 02 ATEX 2114 U[1] EN 60079-0/EN 60079-7		0.5-4mm²	0.5-4mm²	275V	24/24[2]	0.5-4mm²	0.5-4mm²	275V	24
Width	Wire strip length	6mm			9mm	6mm			9mm
Approvals		ATEX LR				LR			

		Type	Part No.	Std. Pack	Type	Part No.	Std. Pack
Multi-tier block	gray	WK 4 E/U	57.404.7055.0	100			
Multi-tier block, vert. connected	black				WK 4 E/U/VB SCHWARZ	57.404.6955.1	100
Multi-tier ground block	green/yellow						
Function block	red						
Function block	orange						
Accessories							
1. Mounting rail TS 35, DIN rail 7.5 mm high	L = 2 m	35 x 27 x 7,5 EN 60715	98.300.0000.0	1	35 x 27 x 7,5 EN 60715	98.300.0000.0	1
Mounting rail TS 35, DIN rail, 15 mm high	L = 2 m	35 x 24 x 15 EN 60715	98.360.0000.0	1	35 x 24 x 15 EN 60715	98.360.0000.0	1
Mounting rail TS 32, G rail*	L = 2 m	9006 EN 60715 G-32	98.190.0000.0	1	9006 EN 60715 G-32	98.190.0000.0	1
2. End clamp with U-foot*	10mm wide	WE 1/U	Z5.523.5753.0	100	WE 1/U	Z5.523.5753.0	100
End clamp TS 35, with screw	8mm wide	9708/2 S 35	Z5.522.8553.0	100	9708/2 S 35	Z5.522.8553.0	100
End clamp TS 35, without screw	8mm wide	9708	Z5.522.7053.0	100	WEF 1/35	Z5.523.9353.0	100
3. End plate	gray	AP 4 E	07.311.4055.0	10	AP 4 E	07.311.4055.0	10
	blue						
4. Partition	gray	TW 4 E	07.311.5055.0	10	TW 4 E	07.311.5055.0	10
	blue						
5. Cross connector with screws	2 pole	9215-2	Z7.210.3227.0	50	9215-2	07.210.3227.0	1
for top tier	3 pole	9215-3	Z7.210.3327.0	50	9215-3	07.210.3327.0	1
	up to 6 pole	9215-6	Z7.210.3627.0	50	9215-6	07.210.3627.0	1
Jumper comb for lower tier block	2 pole	IVBS WK 4 E-2	Z7.256.4227.0	10	IVBS WK 4 E-2	Z7.256.4227.0	10
insulated, angled	up to 6 pole	IVBS WK 4 E-6	Z7.256.4627.0	10	IVBS WK 4 E-6	Z7.256.4627.0	10
Jumper comb for lower tier block	2 pole	IVB WK 4 E-2	Z7.255.2227.0	10	IVB WK 4 E-2	Z7.255.2227.0	10
insulated, straight	up to 6 pole	IVB WK 4 E-6	Z7.255.2627.0	10	IVB WK 4 E-6	Z7.255.2627.0	10
6. Partition plate with marking facility							
7. Single cover with marking facility		AD VB 4/15 GELB	04.326.2953.8	10	AD VB 4/15 GELB	04.326.2953.8	10
8. Cover with warning symbol over 4 blocks							

For more accessories see pages 60-77
For marking systems see pages 70-75

[1] Please note the mounting instructions on the cover page.
[2] With/without jumper
[3] With end plates 500 V/6 kV/3
* Do not use in Ex environments.
[4] Ratings to adjacent feed-through blocks of the same series and size
[5] For the current carrying capability of the mounting rail see AT catalog section **facts** & DATA.

ELEMECH INC. 630-499-7080 · www.elemechinc.com	Rev: 0	Device Tag: DB1	
	Date: 8/20/2019		
Manuf.: . PNo: Wieland: 57.404.6955.1	By: MBS	Job Number: EVC7837	Page # 1/1

ABB SwitchLine
Non-fusible disconnect switches
Compact, Heavy duty
16A – 2000A, 600V

ABB

09-001-A010

Catalog number	3 pole	OT16F3	OT25F3	OT40F3	OT63F3	OT80F3	OT30F3	OT60F3	OT100F3
General purpose amp rating	A	20	30	40	60	80	30	60	100
Catalog reference	Page #	1.10	1.10	1.10	1.10	1.10	1.11	1.11	1.11
Approvals①									
	2 pole	—	—	—	—	—	—	—	—
	3 pole	CSA C22.2 No.14	CSA C22.2 No.14	CSA C22.2 No.14	CSA C22.2 No.14	CSA C22.2 No.14	CSA C22.2 No.4	CSA C22.2 No.4	CSA C22.2 No.4
	4 pole	CSA C22.2 No.14	CSA C22.2 No.14	CSA C22.2 No.14	CSA C22.2 No.14	CSA C22.2 No.14	CSA C22.2 No.4	CSA C22.2 No.4	CSA C22.2 No.4
Technical ratings CSA,UL②									
Max operating voltage	V	600	600	600	600	600	600VAC / 250VDC	600VAC / 250VDC	600VAC / 250VDC
Max horsepower rating									
Three phase									
208V	HP	3	7.5	10	15	20	10	20	25
240V	HP	5	7.5	10	15	20	10	20	30
480V	HP	10	15	20	30	40	20	40	50
600V	HP	10	20	25	30	40	30	40	50
Single phase									
120V	HP	1	1.5	2	2	2	2	3	5
240V	HP	2	3	5	7.5	10	5	7.5	15
Technical ratings IEC②									
Rated insulation and operational voltage. AC20 and DC20③	V	750	750	750	750	750	750	750	750
Rated thermal current, I_{th}									
AC 20/DC 20 open	A	25	32	40	63	80	40	63	115
AC 20/DC 20 enclosed	A	25	32	40	63	80	40	63	115
AC 21A ≤ 500V	A	16	25	40	63	80	40	63	100
690V	A	16	25	40	63	80	40	63	100
Rated operational power AC23									
400/415V	kW	7.5	9	11	22	37	15	18.5	37
690V	kW	7.5	9	11	15	18.5	15	15	37
Physical characteristics									
Weight ④ 3 pole	Kg	0.11	0.11	0.11	0.27	0.27	0.36	0.36	0.36
Dimension 3 pole	H mm	68	68	68	91	91	100	100	100
	W mm	35	35	35	53	53	70	70	70
	D mm	56	56	56	72	72	75	75	75
Accessories									
Terminal lug kit		Integral	Integral	Integral	Integral	Integral	Integral	Integral	Integral
Terminal shroud		•	•	•	•	•	•	•	•
Auxiliary contact		•	•	•	•	•	•	•	•
Handle CSA/UL/NEMA type									
Type 1, 3R, 12		•	•	•	•	•	•	•	•
Type 1, 3R, 4, 4X, 12		•	•	•	•	•	•	•	•
Handle type									
Selector		•	•	•	•	•	•	•	•
Pistol		•	•	•	•	•	•	•	•
Conversion kits									
6 pole		•	•	•	•	•	•	•	•
Transfer		•	•	•	•	•	•	•	•
Bypass		•	•	•	•	•	•	•	•
Mechanical interlock		•	•	•	•	•	•	•	•
Electrical interlock		—	—	—	—	—	—	—	—

• = Available
— = Not available

CSA approved, UL listed, IEC rated, CE marked

① CSA 22.2 No.4 (UL98) —CSA File #LR58077, UL File # E101914 , CSA 22.2 No. 14 (UL508) —CSA File #LR58247, UL File # E63822

ELEMECH INC. 630-499-7080 · www.elemechinc.com	Rev: 0	Device Tag: DS1	
	Date: 8/20/2019		
Manuf.: . PNo: ABB: OT63F3 Assembly	By: MBS	Job Number: EVC7837	Page # 1/1

PENTAIR

Hoffman®

11-035-142

PANELS FOR TYPE 3R, 4, 4X, 12 AND 13 ENCLOSURES

Catalog Number	Material	Panel Size D x E (in.)	Panel Size D x E (mm)	Panel Gauge or Thickness	Edge Flanges	T (in.)	T (mm)	Number of Holes
A42P42G	Conductive steel	39.00 x 39.00	991 x 991	12 ga.	4	0.75	19	8
A48P24	Painted steel	45.00 x 21.00	1143 x 533	12 ga.	2	0.75	19	6
A48P24G	Conductive steel	45.00 x 21.00	1143 x 533	12 ga.	2	0.75	19	6
A48P30	Painted steel	45.00 x 27.00	1143 x 686	12 ga.	4	0.75	19	6
A48P30G	Conductive steel	45.00 x 27.00	1143 x 686	12 ga.	4	0.75	19	6
A48P36	Painted steel	45.00 x 33.00	1143 x 838	12 ga.	4	0.75	19	8
A48P36G	Conductive steel	45.00 x 33.00	1143 x 838	12 ga.	4	0.75	19	8
A48P36SS6	Stainless Steel	45.00 x 33.00	1143 x 838	12 ga.	4	0.75	19	8
A48P36AL	Aluminum	45.00 x 33.00	1143 x 838	0.10 in./3 mm	4	0.75	19	8
A48P42	Painted steel	45.00 x 39.00	1143 x 991	12 ga.	4	0.75	19	8
A48P42G	Conductive steel	45.00 x 39.00	1143 x 991	12 ga.	4	0.75	19	8
A48P48	Painted steel	44.00 x 44.00	1118 x 1118	10 ga.	4	0.88	22	8
A48P48G	Conductive steel	44.00 x 44.00	1118 x 1118	10 ga.	4	0.88	22	8
A54P42	Painted steel	50.00 x 38.00	1270 x 965	12 ga.	4	0.75	19	8
A54P42G	Conductive steel	50.00 x 38.00	1270 x 965	10 ga.	4	0.75	19	8
A60P24	Painted steel	57.00 x 21.00	1448 x 533	12 ga.	4	0.75	19	6
A60P24G	Conductive steel	57.00 x 21.00	1448 x 533	12 ga.	4	0.75	19	6
A60P30	Painted steel	57.00 x 27.00	1448 x 686	12 ga.	4	0.75	19	6
A60P30G	Conductive steel	57.00 x 27.00	1448 x 686	12 ga.	4	0.75	19	6
A60P36	Painted steel	57.00 x 33.00	1448 x 838	12 ga.	4	0.75	19	8
A60P36G	Conductive steel	57.00 x 33.00	1448 x 838	12 ga.	4	0.75	19	8
A60P36SS6	Stainless Steel	57.00 x 33.00	1448 x 838	12 ga.	4	0.75	19	8
A60P36AL	Aluminum	57.00 x 33.00	1448 x 838	0.10 in./3 mm	4	0.75	19	8
A60BFP42	Painted steel	56.00 x 38.00	1422 x 965	10 ga.	4	0.88	22	10
A60BFP42G	Conductive steel	56.00 x 38.00	1422 x 965	10 ga.	4	0.88	22	10
A60P48	Painted steel	56.00 x 44.00	1422 x 1118	10 ga.	4	0.88	22	12
A60P48G	Conductive steel	56.00 x 44.00	1422 x 1118	10 ga.	4	0.88	22	12
A60P60	Painted steel	56.00 x 56.00	1422 x 1422	10 ga.	4	0.88	22	10
A60P60G	Conductive steel	56.00 x 56.00	1422 x 1422	10 ga.	4	0.88	22	10
A72P36	Painted steel	69.00 x 33.00	1753 x 838	12 ga.	4	0.75	19	8
A72P36G	Conductive steel	69.00 x 33.00	1753 x 838	12 ga.	4	0.75	19	8
A72P60	Painted steel	68.00 x 56.00	1727 x 1422	10 ga.	4	0.88	22	12
A72P60G	Conductive steel	68.00 x 56.00	1727 x 1422	10 ga.	4	0.88	22	12
A72P72	Painted steel	68.00 x 68.00	1727 x 1727	10 ga.	4	0.88	22	10
A72P72G	Conductive steel	68.00 x 68.00	1727 x 1727	10 ga.	4	0.88	22	10

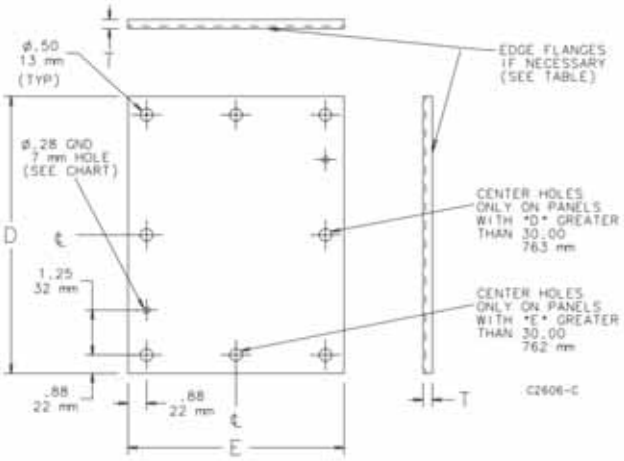

ELEMECH INC.
630-499-7080 · www.elemechinc.com

Manuf.: . PNo: Hoffman: A-48P36	Rev: 0	Device Tag: EN1	
	Date: 8/20/2019		
	By: MBS	Job Number: EVC7837	Page # 1/1

CONTINUOUS HINGE WITH 3-POINT LATCH TYPE 4X WALL-MOUNT ENCLOSURES

PENTAIR

11-035-724

ENCLOSURE CATALOG NUMBER	ENCLOSURE DIMENSIONS (IN.)	SUB-PANEL CATALOG NUMBER
A-AHCBSS6LP3PT-W/MOD	A x B x C	A APB

NOTE:

1. 3PT INDICATES 3-POINT LATCH
2. MOD INDICATES PAINTED WHITE (CUSTOM)
3. "W" INDICATES PAINTED WHITE (CUSTOM)

APPLICATION

These enclosures feature Hoffman's exclusive POWERGLIDE™ Handle with 3-point latching, ideal for indoor or outdoor applications that require corrosion protection, convenient access, and padlocking security.

SPECIFICATIONS

- 14 gauge Type 304 or 316L stainless steel bodies and doors
- Seams continuously welded and ground smooth
- Seamless foam-in-place gasket
- Rolled lip around three sides of door
- Internal 3-point latch and Type 316L stainless steel padlocking POWERGLIDE Handle
- Remove door by pulling stainless steel continuous hinge pin
- Data pocket is high-impact thermoplastic
- Collar studs provided for mounting optional panels
- Exterior hardware on Type 316L stainless steel enclosures matches enclosure material
- Bonding provision on door; grounding stud on body

INDUSTRY STANDARDS

UL 508A Listed; Type 3R, 4, 4X, 12; File No. E61997
cUL Listed per CSA C22.2 No 94; Type 3R, 4, 4X, 12; File No. E61997

NEMA/EEMAC Type 3R, 4, 4X, 12, 13
IEC 60529, IP66
Meets NEMA Type 3RX requirements

FINISH

Door, sides, top and bottom have smooth #4 brushed finish. Handle is electropolished.

ACCESSORIES

See also Accessories.
Panels for Type 3R, 4, 4X, 12 and 13 Enclosures
Steel and Stainless Steel Window Kits
H2OMIT™ Vent Drains, Type 4X
H2OMIT™ Thermoelectric Dehumidifier

MODIFICATION AND CUSTOMIZATION

Hoffman excels at modifying and customizing products to your specifications. Contact your local Hoffman sales office or distributor for complete information.

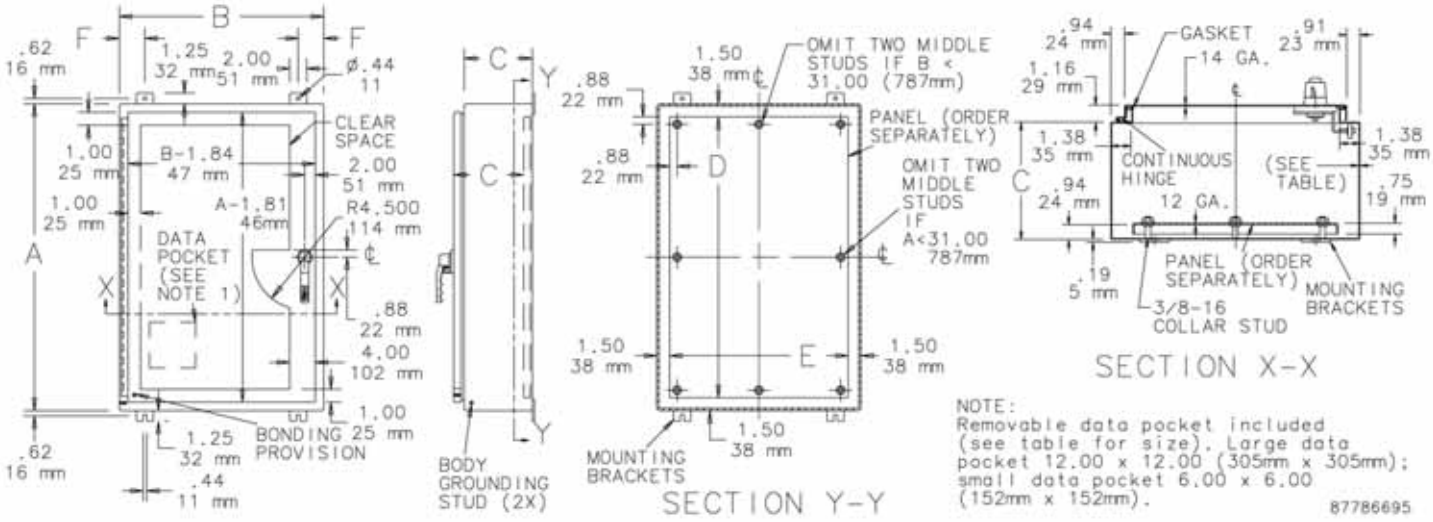

ELEMECH INC.
630-499-7080 · www.elemechinc.com

Rev: 0	Device Tag: EN1
Date: 8/20/2019	
By: MBS	Job Number: EVC7837
	Page # 1/1

Manuf.: . PNo: Hoffman: A-48H3608SSLP3PT

Blackburn

15-011-000

Copper Connectors
T&B Catalog Number: L70
UPC Number: 78378613002
Status: Active
Description:

Type L - Copper Single Conductor, One-Hole Mount for Conductor Range 14 Sol.-4 Str.

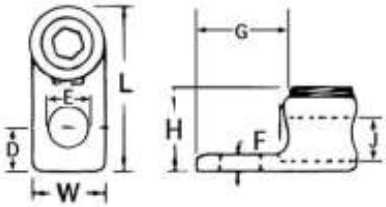

Features

	Cold forged from pure electrolytic copper with 99 percent conductivity.

General

Style	Type L - Copper Single Conductor, One-Hole Mount
Material	Copper
Wire Range	14 Sol.-4 Str.

Dimension Information

Length (inches)	1 1/8
Width (inches)	17/32
Height (inches)	35/64
D (inches)	9/32
E (inches)	9/32
F (inches)	3/32
G (inches)	21/32
J (inches)	9/32

Packaging

T&B Inner Pack	100
Package in Units	1000
T&B Sold in UOM	Each
T&B Weight Per UOM	3.32 lbs. per 100

Notes

	Available with screwdriver slot head screws only.
	UL 486A tested.

Certifications

RoHS Compliance	Yes

Certifications

File Nbr:
E9809

For further technical assistance, please contact us...

Thomas & Betts - USA
8155 T&B Blvd.
Memphis, TN 38125
www.tnb.com

T&B Technical Support
MS 3B-50
8155 T&B Blvd.
Memphis, TN 38125

Hours: 7AM - 6PM CDT
Monday-Friday
Phone: (888) 862-3289
Fax: (901) 252-1321
Email:techsupport@tnb.com

Flexible Heaters

Flexible Heater Installation Methods

Flexible Heater Pressure Sensitive Adhesive (PSA)

17-451-001

PSA

For ease of attachment specify PSA. Installation is simple: just peel off the protective liner and apply. It will adhere to most clean smooth surfaces. Care must be taken when installing to attain a smooth, consistent, uniform bond to achieve maximum results.

Maximum Temperature:
Continuous – 300°F (149°C)
Intermittent – 500°F (260°C)

Recommended Watt Density:
Under 5 W/in^2 (0.78 W/cm^2)

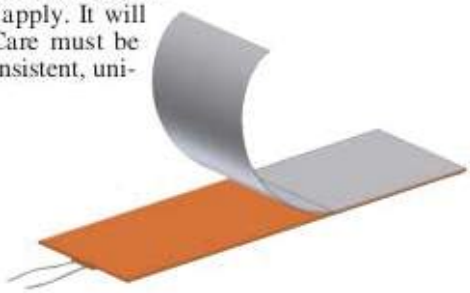

PSA Plus

A layer of aluminum foil is vulcanized to the back of the heater for added heat dissipation prior to the application of PSA.

UL Recognized: U.S. & Canada E65652

CSA Certified: 043099

Tempco PN: **SHS80707**
SILICONE RUBBER HEATER
3.000" W x 5.000" L
12" Teflon® leads in location A
Wire construction
Pressure sensitive adhesive
75 watts, 120 volts

Tempco PN: **SHS80708**
SILICONE RUBBER HEATER
4.500" W x 6.500" L
12" Teflon® leads in location A
Wire construction
Pressure sensitive adhesive
150 watts, 120 volts

ELEMECH INC. 630-499-7080 · www.elemechinc.com	Rev: 0	Device Tag: HTR1	
	Date: 8/20/2019		
Manuf.: . PNo: Tempco: SHS80708	By: MBS	Job Number: EVC7837	Page # 1/1

Zelio® Plug-In Relays

RPM power relays

Telemecanique

06-058-024

General characteristics

Conforming to standards			IEC/EN 61810-1 (iss. 2), UL 508, CSA C22-2 n° 14
Product certifications			cULus File E164862 CCN NLDX, NLDX7; cURus File E164862 CCN NLDX2, NLDX8; CSA; CE; RoHS compliant
Ambient air temperature around the device	Storage	°C (F)	- 40... + 85 (-40... +185)
	Operation	°C (F)	- 40... + 55 (-40... +131)
Vibration resistance conforming to IEC/EN 60068-2-6	In operation		3 gn (10...150 Hz/± 1 mm / 5g/5 cycles)
	Not operating		5 gn (10...150 Hz/± 1 mm / 5g/5 cycles)
Degree of protection	Conforming to IEC/EN 60529		IP 40
Shock resistance conforming to IEC/EN 60068-2-27	Opening		15 gn
	Closing		15 gn
Protection category			RT I
Mounting position			Any

Insulation characteristics

Rated insulation voltage (Ui)	Conforming to IEC/EN 60947	V	250 (IEC), 300 (UL, CSA)
Rated impulse withstand voltage (Uimp)		kV	4 (1.2/50 µs)
Dielectric strength (rms voltage)	Between coil and contact	∼ V	1550
	Between poles	∼ V	1550
	Between contacts	∼ V	1500

Contact characteristics

Relay type				RPM1•••	RPM2•••	RPM3•••	RPM4•••
Number and type of contacts				1 C/O	2 C/O	3 C/O	4 C/O
Contact materials				AgNi			
Conventional thermal current (Ith)	For ambient temperature ≤ 55 °C		A	15			
Rated operational current in utilization categories AC-1 and DC-1	Conforming to IEC	NO	A	15			
		NC	A	7.5			
	Conforming to UL		A	15			
Switching current	Minimum		mA	10			
Switching voltage	Maximum		V	∼/⎓ 250 (IEC)			
	Minimum		V	17			
Nominal load (resistive)			A	15 / 250 ∼ V			
			A	15 / 28 ⎓ V			
Switching capacity	Maximum	∼	VA	3750			
		⎓	W	420			
	Minimum		mW	170			
Maximum operating rate In operating cycles/hour	No-load			18 000			
	Under load			1200			
Utilization coefficient				20 %			
Mechanical durability	In millions of operating cycles			10			
Electrical durability In millions of operating cycles	Resistive load			0.1		0.06	
	Inductive load			See curves below			

Electrical durability of contacts
Resistive load ∼

Reduction coefficient for inductive load ∼ (depending on power factor cos φ)

Maximum switching capacity on resistive load ⎓

ELEMECH INC. 630-499-7080 · www.elemechinc.com	Rev: 0	Device Tag: IR1-17	
	Date: 8/20/2019		
Manuf.: . PNo: Square D: RPM12F7	By: MBS	Job Number: EVC7837	Page # 1/2

Telemecanique

06-058-024

Power relays without LED (sold in lots of 10)

Control circuit voltge	Number and type of contacts - Thermal current (Ith) 1 C/O - 15 A Catalog number	Weight	2 C/O - 15 A Catalog number	Weight	3 C/O - 15 A Catalog number	Weight	4 C/O - 15 A Catalog number	Weight
V		kg		kg		kg		kg
⎓ 12	RPM11JD	0.026	RPM21JD	0.036	RPM31JD	0.054	RPM41JD	0.071
⎓ 24	RPM11BD	0.026	RPM21BD	0.036	RPM31BD	0.054	RPM41BD	0.071
⎓ 48	RPM11ED	0.026	RPM21ED	0.036	RPM31ED	0.054	RPM41ED	0.071
⎓ 110	RPM11FD	0.026	RPM21FD	0.036	RPM31FD	0.054	RPM41FD	0.071
∿ 24	RPM11B7	0.026	RPM21B7	0.036	RPM31B7	0.054	RPM41B7	0.071
∿ 48	RPM11E7	0.026	RPM21E7	0.036	RPM31E7	0.054	RPM41E7	0.071
∿ 120	RPM11F7	0.026	RPM21F7	0.036	RPM31F7	0.054	RPM41F7	0.071
∿ 230	RPM11P7	0.026	RPM21P7	0.036	RPM31P7	0.054	RPM41P7	0.071

Power relays with LED (sold in lots of 10)

⎓ 12	RPM12JD	0.026	RPM22JD	0.036	RPM32JD	0.054	RPM42JD	0.071
⎓ 24	RPM12BD	0.026	RPM22BD	0.036	RPM32BD	0.054	RPM42BD	0.071
⎓ 48	RPM12ED	0.026	RPM22ED	0.036	RPM32ED	0.054	RPM42ED	0.071
⎓ 110	RPM12FD	0.026	RPM22FD	0.036	RPM32FD	0.054	RPM42FD	0.071
∿ 24	RPM12B7	0.026	RPM22B7	0.036	RPM32B7	0.054	RPM42B7	0.071
∿ 48	RPM12E7	0.026	RPM22E7	0.036	RPM32E7	0.054	RPM42E7	0.071
∿ 120	RPM12F7	0.026	RPM22F7	0.036	RPM32F7	0.054	RPM42F7	0.071
∿ 230	RPM12P7	0.026	RPM22P7	0.036	RPM32P7	0.054	RPM42P7	0.071

Dimensions (mm):

Power relays

RPM 1

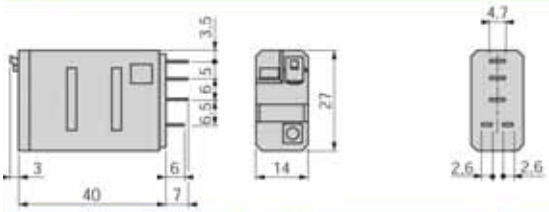

Common side view

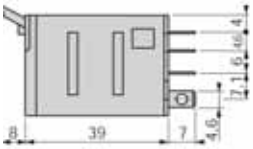

RPM2

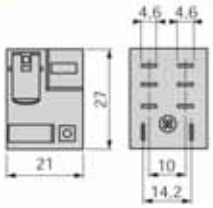

RPM 3

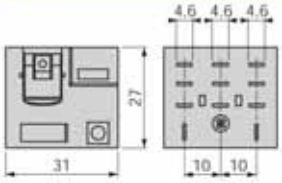

RPM 4

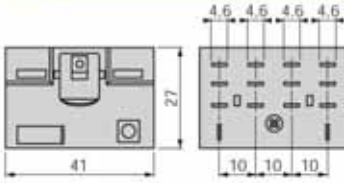

ELEMECH INC. 630-499-7080 · www.elemechinc.com	Rev: 0	Device Tag: IR1-17	
	Date: 8/20/2019		
Manuf.: . PNo: Square D: RPM12F7	By: MBS	Job Number: EVC7837	Page # 2/2

Sockets

Telemecanique

06-058-027

RPZF1

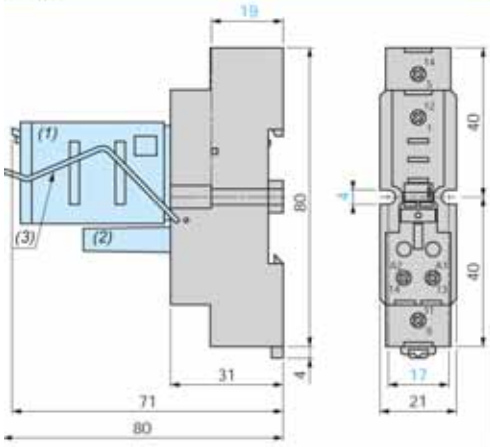

RPZF2

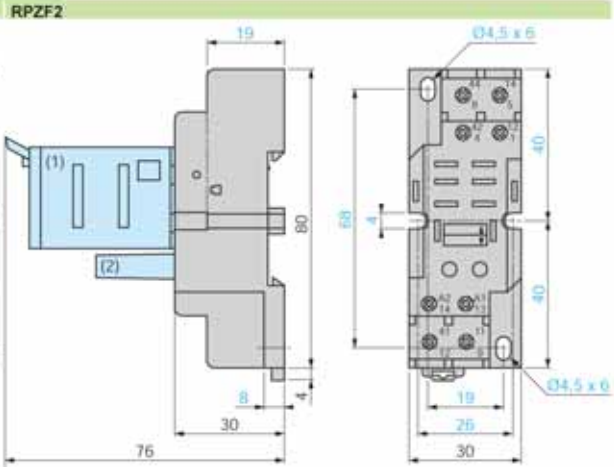

Common side view

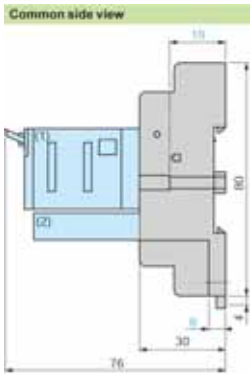

RPZF3

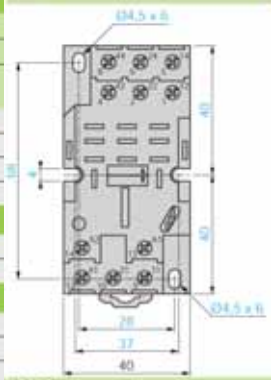

RPZF4

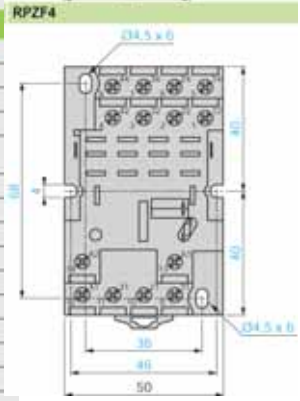

Socket characteristics

Socket type			RPZF1	RPZF2	RPZF3 / RPZF4
Relay types used			RPM1●●●	RPM2●●●	RPM3●●● / RPM4●●●
Protection module types used			RXM02●●● RXM04●●●	RXM02●●● RXM04●●●	RUW24●●● / RUW24●●●
Contact terminal arrangement			Mixed		
Wire connection method			Screw clamp terminals		
Product certifications			cURus File E172326 CCN SWIV2, SWIV8; CSA; CE; RoHS compliant		
Conforming to standards			IEC 61984, CE		
Electrical characteristics					
Conventional thermal current (Ith)		A	16		
Maximum operating voltage		V	250 (IEC)		
Insulation characteristics					
Between adjacent output contacts		Vrms	2500		
Between input and output contacts		Vrms	2500		
Between contacts and DIN rail		Vrms	2500		
General characteristics					
Ambient air temperature around the device	Operation	°C	- 40…+ 55		
	Storage	°C	- 40…+ 85		
Degree of protection	Conforming to IEC/EN 60529		IP 20		
Connection	Solid wire without cable end, 1 conductor		0.5…1.5 mm² - AWG 20…AWG 16	0.5…2.5 mm² - AWG 20…AWG 14	
	Solid wire without cable end, 2 conductors		0.5…1.5 mm² - AWG 20…AWG 16	0.5…2.5 mm² - AWG 20…AWG 14	
	Flexible wire with cable end, 1 conductor		0.25…1 mm² - AWG 22…AWG 17	0.25…1.5 mm² - AWG 22…AWG 16	
	Flexible wire with cable end, 2 conductors		0.25…1 mm² - AWG 22…AWG 17	0.25…1.5 mm² - AWG 22…AWG 16	
Maximum tightening torque / Screw size		Nm	1 / M3 screw	1 / M3.5 screw	
Mounting			35 mm DIN rail / panel mount		
Mounting on DIN rail			By red plastic clip		
Terminal referencing			IEC, NEMA		
Compatibility with the metal hold-down clip			Yes	No	
Timer module compatibility			No		Yes
Protection module			RXM040W, RXM041●●, RXM021●●		RUW24●●
Clip-in ID tags			No		
Wire connection method	Screw clamp terminals		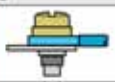		

Sockets

Contact terminal arrangement	Connection	Relay type	Sold in lots of	Catalog number	Weight kg
Mixed	Screw clamp terminals	RPM1●●●	10	RPZF1	0.042
		RPM2●●●	10	RPZF2	0.054
		RPM3●●●	10	RPZF3	0.072
		RPM4●●●	10	RPZF4	0.094

c UL us

ELEMECH INC.
630-499-7080 · www.elemechinc.com

Rev: 0	Device Tag: IR1-17		
Date: 8/20/2019			
Manuf.: . PNo: Square D: RPZR235	By: MBS	Job Number: EVC7837	Page # 1/1

Motor Load Monitors (Power Factor)
CM-LWN
2 SPDT Relay Outputs

34-001-003

Ordering Table

Supply voltage	Part Number
	Current ranges: 0.5…5 A;
24…240 V AC/DC	1SVR 450 335 R 0000
110…130 V AC	1SVR 450 330 R 0000
220…240 V AC	1SVR 450 331 R 0000
380…440 V AC	1SVR 450 332 R 0000
480…500 V AC	1SVR 450 334 R 0000
	Current ranges: 2…20 A;
24…240 V AC/DC	1SVR 450 335 R 0100
110…130 V AC	1SVR 450 330 R 0100
220…240 V AC	1SVR 450 331 R 0100
380…440 V AC	1SVR 450 332 R 0100
480…500 V AC	1SVR 450 334 R 0100

Mechanical View

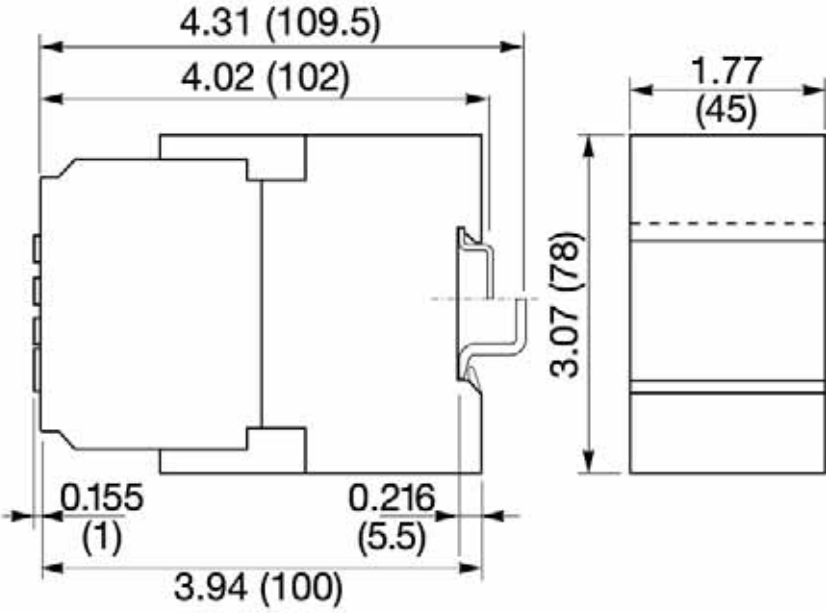

Inches (Millimeters)

ELEMECH INC. 630-499-7080 · www.elemechinc.com	Rev: 0	Device Tag: LM1,2	
	Date: 8/20/2019		
Manuf.: . PNo: ABB: 1SVR 450 330 R0100	By: MBS	Job Number: EVC7837	Page # 1/2

Technical Data

Input		
Supply voltage - power consumption	A1-A2	24...240 V AC/DC - 8.4 VA
	A1-A2	110...130 V AC - 3.6 VA
	A1-A2	220...240 V AC - 3.6 VA
	A1-A2	380...440 V AC - 3.6 VA
	A1-A2	480...500 V AC - 3.6 VA
Tolerance of supply voltage		-15 % ... +10 %
Supply voltage frequency AC versions		50...60 Hz
Supply voltage frequency 24...240 V AC/DC version		15...400 Hz
Time Delay		Starting time (Time S) and (response) time delay (Time R)
Timing error over the supply voltage range		≤ 0.5 %
Timing error over the temperature range		≤ 0.06 % / °C
Measuring Circuit		
Measuring circuit inputs		L1, L2, L3
Voltage range		24…240 V AC/DC, 110...500 V AC in 5 ranges
Measuring current input - output		L1/k - L1/l
		Version 5 A / Version 20 A
Current range		0.5...5 A / 2...20 A
Possible overload current input		25 A for 3 s / 100 A for 3 s
Hysteresis (referring to the j angle, in °)		4°
Response time		≤300 ms
Display of Operating Status		
Supply voltage		LED, green
cos φ min.		LED, red
cos φ max.		LED, red
Output	15-16/18, 25-26/28	2 relays, each with SPDT contacts for cos φ min. and cos φ max., normally energized
Rated voltage	VDE 0110, IEC 947-1	400 V
Rated switching voltage max.		400 V AC
Rated switching current	AC 12 (resistive)	4 A (at 230 V)
	AC 15 (inductive)	3 A (at 230 V)
	DC 12 (resistive)	4 A (at 24 V)
	DC 13 (inductive)	2 A (at 24 V)
Mechanical life		30 x 10^6 operations
Electrical life (acc. to AC 12 / 230 V / 4 A)		1 x 10^5 operations
Short-circuit proof, max. fuse rating		5 A / fast acting
General Data		
Rated impulse withstand voltage Vimp		4 kV
Operating temperature		-25°C ... +65°C
Storage temperature		-40°C ... +85°C
Mounting to DIN rail (EN 50022)		Snap-on mounting/Screw mounting using an adapter
Wire size stranded with wire end ferrule		2 x 14 AWG (2 x 2.5 mm^2)
Weight		Approx. 0.66 lb (300 g)

34-001-003

Series 17 and 27 Intrinsically Safe Controls

100-237-001

- Cannot Ignite Flammable Materials
- Solid State Reliability
- Up to 470K Ohm/cm Sensitivity (Series 17)
- Internal Surge Suppression
- SPST Contacts (Series 17)
- SPDT Contacts (Series 27)
- Can Be Used for Single Level or Differential Service

Series 17 – FM Approved

Series 17 is FM Approved for use in Class I or II, Division 1, Groups A-G hazardous atmospheres. SPST isolated contacts. Field adjustable sensitivity by use of external resistors.

Series 27 – UL-CSA Approved

Series 27 is UL approved for use in Class I, Groups A, B, C, D; Class II, Groups E, F, G; and Class III hazardous locations. SPDT output contacts. UL Pilot Duty rated.

CSA Certified for Class 1, Groups A, B, C and D; Class II, Groups E, F and G; Class III

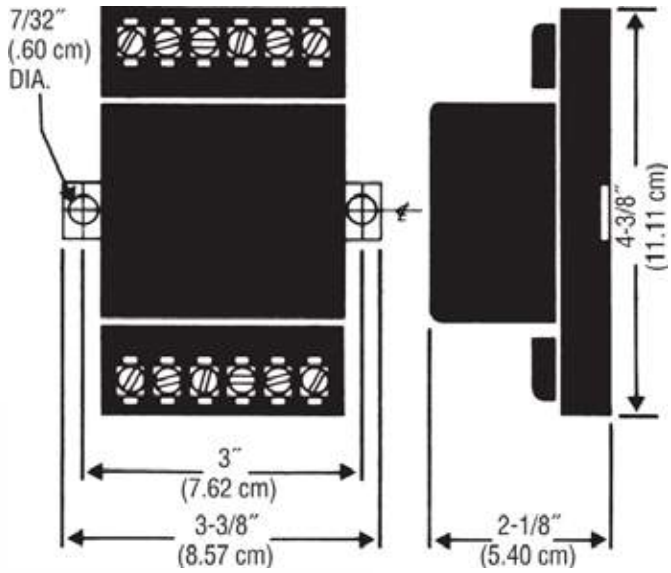

How to Order

Use the **Bold** characters from the chart below to construct a product code.

17 X X X X

Series
17– FM Approved **27**– UL Approved

Mode of Operation
A – Direct **B** – Inverse

Supply Voltage
1 – 120 VAC **2** – 240 VAC[1] **3** – 24 VAC[2]

Sensitivity (ohms)[3]
D – 3K **E** – 10K **G** – 100K **X** – (17 only)[3]

Enclosure
0 – None **1** – NEMA 1 **4** – NEMA 4

Notes:
1. 240V standard in Series 17. Non-standard, but available in Series 27.
2. 24V available only in Series 17.
3. Series 27 only. Series 17 includes a full set of resistors (3.3K, 4.7K, 10K, 47K, 100K, 220K, 470K ohms) to allow modification of sensitivity in the field. Product code symbol in this position for

Specifications

Contact Design	
Series 17	1 N.O. & 1 N.C. Isolated Contacts
Series 27	1 N.O. & 1 N.C. (1 form C)
Contact Rating (24/120/240VAC)	8 amp Resistive
Mode of Operation	Direct/Inverse, factory set
Sensitivity	
Series 17	0-470K ohm, field adjustable
Series 27	0-100K ohm, factory set
Primary Voltage	
Series 17	24 VAC, 120 VAC, 240 VAC (+10%/-15%) 50/60 Hz
Series 27	120 VAC, 240 VAC (+10%/-15%) 50/60Hz
Secondary Voltage	
Series 17	13 VAC, 4 mA
Series 27	11 VAC, 2.3 mA
Temperature	-40°F to +150°F (-40°C to +65°C)
Approvals	
Series 17	FM File # 1G9A1.AX
Series 27	U.L. 913 File # E44570
Connections	All screw type connections

Series 17

ELEMECH INC.
630-499-7080 · www.elemechinc.com

Rev: 0	Device Tag: LR1-3	
Date: 8/20/2019		
Manuf.: . PNo: Gems Sensors: 27A1E0	Job Number: EVC7837	Page # 1/1
By: MBS		

30.5 mm Push Buttons

Pilot Lights

Allen-Bradley

32-005-048

800 T ___ – P T ___ 16 G

a b c d e f g

a

Protection Rating	
Code	Description
T	Metal, Type 4/13
H	Plastic, Type 4/4X/13

c

Power Module Type		
800T Type 4/13	Description	800H Type 4/4X/13
Code		Code
P	Transformer (or dual input)	PR
Q	Full voltage/ Universal	QR

d

Lamp Test Options	
Code	Description
Blank	No test option
T	Push-to-test
D	Dual input — diode▲
DT	Dual input — transformer relay
Note: Push-to-test supplied with factory jumpered contact block.	

e

Illumination Options	
Code	Description
Blank	Incandescent
H	LED+

f

Voltage	
Transformer	
Code	Description
16	120V AC 50/60 Hz
26	240V AC 50/60 Hz
46	480V AC 50/60 Hz
56	600V AC 50/60 Hz
Full Voltage — Incandescent	
12	12V AC/DC
24	24V AC/DC
48	48V AC/DC
10	120V AC/DC
20	240V AC/DC
Universal — LED	
2	12…130V AC/DC
Dual Input	
16	120V AC
24	24V AC/DC (Dual input diode only)

g

Lens Color		
Code	Color	Glass Code ▲
Blank	No lens	Blank
A	Amber	D
B	Blue	E
C	Clear	F
G	Green	H
R	Red	J
W	White	K

Specifications+

Electrical Ratings		
Contact ratings		Refer to the contact ratings tables on page 10-4.
Dielectric strength		2200V for one minute, 1300V for one minute (Logic Reed)
Electrical design life cycles		1 000 000 at max. rated load, 200 000 at max. rated load (Logic Reed)
Mechanical Ratings		
Vibration		10…2000 Hz, 1.52 mm displacement (peak-to-peak) max./ 10 G max. (except Logic Reed)
Shock		1/2 cycle sine wave for 11 ms ≥ 25 G (contact fragility) and no damage at 100 G
Degree of protection		Type 1/4/12/13 (800T); Type 1/4/4X/12/13 (800H); EN/IEC 60529 IP66/65
Mechanical design life cycles		
Push buttons	(Momentary, non-illuminated)	10 000 000 min.
	(Momentary, illuminated)	250 000 min.
	(Push-pull/twist-to-release)	250 000 min.
Selector switches	(Non-illuminated)	1 000 000 min.
	(Illuminated, key-operated)	200 000 min.
Potentiometers		25 000 min.
All other devices		200 000 min.
Contact operation		Shallow, mini, and low-voltage contact blocks: Slow, double make and break Logic Reed and sealed switch contact blocks: Single break magnetic
Wire gauge/Terminal screw torque		#18…14 AWG (#18…10 Max Duty) / 6…8 lb•in
Typical operating forces Operators without contact blocks		Flush, extended button, standard mushroom, jumbo plastic mushroom: 2 lbs max. Jumbo and extended aluminum mushroom head: 3.95 lbs max. Maintained selector switch: 3.6 in•lb max.
Spring return selector switches		3.6 in•lb to stop, 0.2 in•lb to return
Illuminated push buttons and push-to-test pilot lights		5 lb max.
2-position push-pull		8.0 lb max. push or pull
3-position push-pull		8 lb max. push to in position or pull to center position (15 lb max. pull to out position)
Twist-to-release or push-pull		9 lbs max. push or pull 30 in•oz max. twist, 6 in•oz minimum return
Potentiometer		Rotational torque 3…12 in•oz; stopping torque 12 in•lb (minimum)
Contact blocks	Standard	1 lb
	Logic Reed	1 lb max.
	Sealed switch	3 lb max. at 0.205 in. plunger travel
	Stackable sealed switch	1 lb max.
	MaxDuty	1.4 lb max.
	PenTUFF	1.4 lb max.
	Self Monitoring	1.6 lb
Environment		
Temperature range	Operating	-40…+131 °F (-40…+55 °C)
	Storage	-40…+185 °F (-40…+85 °C)
Note: Operating temperatures below freezing are based on the absence of moisture and liquids. Consult your local Rockwell Automation sales office or Allen-Bradley distributor for use in lower temperature applications.		
Humidity		50…95% RH from 77…140 °F (25…60 °C) per Procedure IV of MIL-STD-810C, Method 507.1 cycling test

ELEMECH INC. 630-499-7080 · www.elemechinc.com	Rev: 0	Device Tag: LT1-6,10,1
	Date: 8/20/2019	
Manuf.: . PNo: Allen-Bradley: 800H-PR16	By: MBS	Job Number: EVC7837
		Page # 1/1

Replacement Color Caps

30.5 mm Accessories

Allen-Bradley

32-005-042

	800T/H Pilot Light Color Caps		
	Standard*	Push-to-Test*	18 mm
Color	Cat. No.	Cat. No.	Cat. No.
Amber	**800T-N26A**	**800T-N42**	**800T-N122A**
Blue	**800T-N26B**	**800T-N43**	**800T-N122B**
Clear	**800T-N26C**	**800T-N45**	800T-N122C
Green	**800T-N26G**	**800T-N41**	**800T-N122G**
Red	**800T-N26R**	**800T-N40**	**800T-N122R**
White	**800T-N26W**	**800T-N44**	**800T-N122W**

Auxiliary Contacts

Allen-Bradley

22-005-010

Auxiliary Contact Blocks for Front Mounting ❶

- 2- and 4-pole
- Quick and easy mounting without tools
- Electronic-compatible contacts down to 17V, 5 mA
- Mutual positive guidance to the main contactor poles (except for L types)
- Models with equal function with several terminal numbering choices

L = Late break / Early make

Auxiliary contact blocks for front installation ❸

- 2 and 4 poles
- Quick and easy mounting without tools
- Contacts compatible with electronics
- Mutual positive quidance with the main contactor poles (except for L types)
- Models with equal function with several terminal numbering choises

L = late break / early make

N.O.	N.C.	Connection Diagrams	For Use With	Cat. No.
0	2	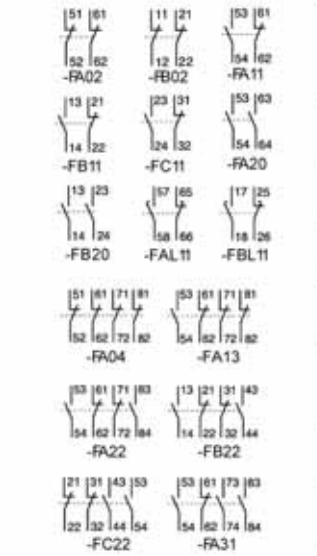	100-C all C30⊗00…C85⊗00	100-FA02 100-FB02
1	1		100-C all C30⊗00…C85⊗00 C09⊗10…C23⊗10	100-FA11 100-FB11 100-FC11
2	0		100-C all C30⊗00…C85⊗00	100-FA20 100-FB20
1L	1L		100-C all C30⊗00…C85⊗00	100-FAL11 100-FBL11
0	4		100-C all	100-FA04
1	3		100-C all	100-FA13
2	2		100-C all C30⊗00…C85⊗00 C09⊗10…C23⊗10	100-FA22 100-FB22 100-FC22
3	1		100-C all C09⊗10…C23⊗10	100-FA31 100-FC31
4	0		100-C all	100-FA40
1+1L	1+1L		100-C all	100-FAL22

Bulletin 100-C Contactors

Allen-Bradley

22-005-012

104-C ___ D ___ ___

Rated Amps

Code	N.O. Contacts
0	No Contact
2	1 N.O.

Code	N.C. Contacts
0	No Contact
2	1 N.C.

Hz \ V	120
60Hz	D

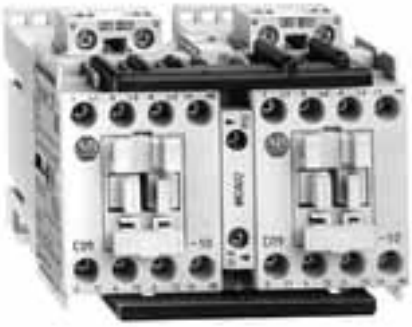

Reversing AC- and DC-Operated Contactors

I_e [A]		Ratings for Switching AC Motors — AC-2, AC-3, AC-4										Auxiliary Contacts Installed per Contactor		
		3-Phase kW (50 Hz)				Hp (60 Hz)								
						1-Phase		3-Phase						
AC-3	AC-1	230V	400V/415V	500V	690V	115V	230V	200V	230V	460V	575V	N.O.	N.C.*	Cat. No.
9	32	3	4	4	4	1/2	1-1/2	2	2	5	7-1/2	1	1	104-C09⊗22
12	32	4	5.5	5.5	5.5	1/2	2	3	3	7-1/2	10	1	1	104-C12⊗22
16	32	5.5	7.5	7.5	7.5	1	3	5	5	10	15	1	1	104-C16⊗22
23	32	7.5	11	13	10	2	3	5	7-1/2	15	15	1	1	104-C23⊗22
30	65	10	15	15	15	2	5	7-1/2	10	20	25	0	1	104-C30⊗02
												1	1	104-C30⊗22
37	65	11	18.5/20	20	18.5	3	5	10	10	25	30	0	1	104-C37⊗02
												1	1	104-C37⊗22
43	85	13	22	25	22	3	7.5	10	15	30	30	0	1	104-C43⊗02
												1	1	104-C43⊗22
60	100	18.5	32	37	32	5	10	15	20	40	50	0	1	104-C60⊗02
												1	1	104-C60⊗22
72	100	22	40	45	40	5	15	20	25	50	60	0	1	104-C72⊗02
												1	1	104-C72⊗22
85	100	25	45	55	45	7-1/2	15	25	30	60	60	0	1	104-C85⊗02
												1	1	104-C85⊗22
97	130	30	55	55	55	10	15	30	30	75	75	0	1	**104-C97⊗02**
												1	1	**104-C97⊗22**

* The N.C. auxiliary contact is supplied as part of the mechanical/electrical interlock.

⊗ Coil Voltage Code and Terminal Position

The Cat. No. as listed is incomplete. Select a coil voltage code from the table below to complete the Cat. No. Example: 120V, 60Hz: **Cat. No. 100-C09⊗10** becomes **Cat. No.100-C09D10**.

[V] / Hz	12	24	32	36	42	48	100	100-110	110	120	127	200	200-220	208	208-240	220-230	230	230-240	240	277	347	380	380-400	400	400-415	440	480	500	550	600
50 Hz	R	K	V	W	X	Y	KP	—	D	P	S	KG	L	—	—	F	—	VA	T	—	—	—	N	—	G	B	—	M	C	—
60 Hz	Q	J	—	V	—	X	—	KP	—	D	—	—	KG	H	L	—	—	—	A	T	I	E	—	—	—	N	B	—	—	C
50/60 Hz	—	KJ	—	—	—	KY	KP	—	KD	—	—	KG	KL‡	—	—	KL‡	KF	—	KA	—	—	—	—	KN	—	KB	—	—	—	—

‡ Not available on 100/104-C90 or -C97 contactors.

DC Voltages [V]		9	12	24	36	48	48-72	60	64	72	80	110	110-125	115	125	220	220-250	230	250
100-C09...C43	Standard	ZR	ZQ	ZJ	ZW	ZY	—	ZZ	ZB	ZG	ZE	ZD	—	ZP	ZS	ZA	—	ZF	ZT
	with Integrated Diode	—	—	DJ	—	—	—	—	—	—	—	—	—	—	—	—	—	—	—
	Electronic with Integrated Diode	—	EQ	EJ	—	—	EY	—	—	—	—	—	ED	—	—	—	EA	—	—
100-C60...C97	with Integrated Diode	DR	DQ	DJ	DW	DY	—	DZ	DB	DG	DE	DD	—	DP	DS	DA	—	DF	DT

ELEMECH INC.
630-499-7080 · www.elemechinc.com

Rev: 0	Device Tag: M1-F/R		
Date: 8/20/2019			
Manuf.: . PNo: Allen-Bradley: 104-C09D22	By: MBS	Job Number: EVC7837	Page # 1/1

Allen-Bradley

Bulletin 100-C Contactors

22-005-000

100-C ___ D ___ ___

- Rated Amps
- N.O. Contacts
- N.C. Contacts

V / Hz	120
60Hz	D

Ie [A] AC-3 460V	Ie [A] AC-1 40°C	Ratings for Switching AC Motors - AC-2, AC-3, AC-4: kW (50 Hz) 230V	kW (50 Hz) 380V 415V 400V	kW (50 Hz) 500V	kW (50 Hz) 690V	HP (60 Hz) 1∅ 115V	HP (60 Hz) 1∅ 230V	HP (60 Hz) 3∅ 200V	HP (60 Hz) 3∅ 230V	HP (60 Hz) 3∅ 460V	HP (60 Hz) 3∅ 575V	Aux. Contacts N.O.	Aux. Contacts N.C.	Cat. No.	⊗
9	25	3	4	4	4	1/3	1	2	2	5	7-1/2	1	0	100-C09⊗10	
												0	1	100-C09⊗01	
12	25	4	5.5	5.5	5.5	1/2	2	3	3	7-1/2	10	1	0	100-C12⊗10	
												0	1	100-C12⊗01	
16	32	5.5	7.5	7.5	7.5	1	3	5	5	10	10	1	0	100-C16⊗10	
												0	1	100-C16⊗01	
23	32	7.5	11	11	10	2	3	5	7-1/2	15	15	1	0	100-C23⊗10	
												0	1	100-C23⊗01	
30	45	10	15	15	15	2	5	7-1/2	10	20	20	0	0	100-C30⊗00	
												1	0	100-C30⊗10	
												0	1	100-C30⊗01	
37	50	11	18.5	18.5	18.5	3	5	10	10	25	25	0	0	100-C37⊗00	
												1	0	100-C37⊗10	
												0	1	100-C37⊗01	
43	63	13	22	22	22	3	7-1/2	10	15	30	30	0	0	100-C43⊗00	
												1	0	100-C43⊗10	
												0	1	100-C43⊗01	
60	90	18.5	30	30	30	5	10	15	20	40	40	0	0	100-C60⊗00	
												1	0	100-C60⊗10	
												0	1	100-C60⊗01	
72	90	22	37	37	37	5	15	20	25	50	50	0	0	100-C72⊗00	
												1	0	100-C72⊗10	
												0	1	100-C72⊗01	
85	100	25	45	45	45	7-1/2	15	25	30	60	60	0	0	100-C85⊗00	
												1	0	100-C85⊗10	
												0	1	100-C85⊗01	

⊗ Coil Voltage Code and Terminal Position

The Cat. No. as listed is incomplete. Select a coil voltage code from the table below to complete the Cat. No. Example: 120V, 60Hz: **Cat. No. 100-C09⊗10** becomes **Cat. No.100-C09D10**.

[V] / Hz	12	24	32	36	42	48	100	100-110	110	120	127	200	200-220	208	208-240	220-230	230	230-240	240	277	347	380	380-400	400	400-415	440	480	500	550	600
50 Hz	R	K	V	W	X	Y	KP	—	D	P	S	KG	L	—	—	F	—	VA	T	—	—	—	N	—	G	B	—	M	C	—
60 Hz	Q	J	—	V	—	X	—	KP	—	D	—	—	KG	H	L	—	—	—	A	T	I	E	—	—	—	N	B	—	—	C
50/60 Hz	—	KJ	—	—	—	KY	KP	—	KD	—	—	KG	KL‡	—	—	KL‡	KF	—	KA	—	—	—	—	KN	—	KB	—	—	—	—

‡ Not available on 100/104-C90 or -C97 contactors.

DC Voltages [V]		9	12	24	36	48	48-72	60	64	72	80	110	110-125	115	125	220	220-250	230	250
100-C09...C43	Standard	ZR	ZQ	ZJ	ZW	ZY	—	ZZ	ZB	ZG	ZE	ZD	—	ZP	ZS	ZA	—	ZF	ZT
	with Integrated Diode	—	—	DJ	—	—	—	—	—	—	—	—	—	—	—	—	—	—	—
	Electronic with Integrated Diode	—	EQ	EJ	—	—	EY	—	—	—	—	—	ED	—	—	—	EA	—	—
100-C60...C97	with Integrated Diode	DR	DQ	DJ	DW	DY	—	DZ	DB	DG	DE	DD	—	DP	DS	DA	—	DF	DT

ELEMECH INC.
630-499-7080 · www.elemechinc.com

Rev: 0	Device Tag: M2		
Date: 8/20/2019			
Manuf.: . PNo: Allen-Bradley: 100-C09D10	By: MBS	Job Number: EVC7837	Page # 1/1

MS116, MS132, MO132 manual motor starters
Main accessories

22-001-007

Suitable for	Auxiliary contacts N.O.	Auxiliary contacts N.C.	Description	Part Number	Product Hierarchy 1800001 Order Code
Auxiliary contacts – mountable on the front					
MS116, MS132, MO132, MO165, MS132-T	1	1		HKF1-11	1SAM201901R1001
	1	0		HKF1-10	1SAM201901R1003
	0	1		HKF1-01	1SAM201901R1004
	2	0		HKF1-20	1SAM201901R1002
Auxiliary contacts – mountable on the right					
MS116, MS132, MO132, MO165, MS132-T	1	1	max. 2 pieces	HK1-11	1SAM201902R1001
	2	0	max. 2 pieces	HK1-20	1SAM201902R1002
	0	2	max. 2 pieces	HK1-02	1SAM201902R1003
	2	0	with lead contacts	HK1-20L	1SAM201902R1004
Signaling contacts – mountable on the right					
MS116, MS132, MO132, MO165, MS132-T	1	1	for tripped alarm, max. 2 pieces	SK1-11	1SAM201903R1001
	2	0	for tripped alarm, max. 2 pieces	SK1-20	1SAM201903R1002
	0	2	for tripped alarm, max. 2 pieces	SK1-02	1SAM201903R1003
MS132, MS132-T	1	1	for short-circuit alarm, max. 2 pieces	CK1-11	1SAM301901R1001
	2	0	for short-circuit alarm, max. 2 pieces	CK1-20	1SAM301901R1002
	0	2	for short-circuit alarm, max. 2 pieces	CK1-02	1SAM301901R1003

MS116 manual motor starters

22-001-019

MS116-16

Thermal setting range (Amps)	Single-phase horsepower ratings ①		3-phase horsepower ratings			Catalog number
	120V	240V	240V	480V	600V	
MS116						
0.10 – 0.16	—	—	—	—	—	MS116-0.16
0.16 – 0.25	—	—	—	—	—	MS116-0.25
0.25 – 0.40	—	—	—	—	—	MS116-0.40
0.40 – 0.63	—	—	—	—	—	MS116-0.63
0.63 – 1.0	—	—	—	1/2	1/2	MS116-1.0
1.0 – 1.6	—	1/10	—	3/4	3/4	MS116-1.6
1.6 – 2.5	—	1/6	1/2	1	1.5	MS116-2.5
2.5 – 4.0	1/8	1/3	1	2	3	MS116-4.0
4.0 – 6.3	1/4	1/2	1.5	3	5	MS116-6.3
6.3 – 10	1/2	1.5	3	5	7.5	MS116-10
8.0 – 12	1/2	2	3	7.5	10	MS116-12
10.0 – 16	1	2	5	10	10	MS116-16

Main dimensions mm, *inches*

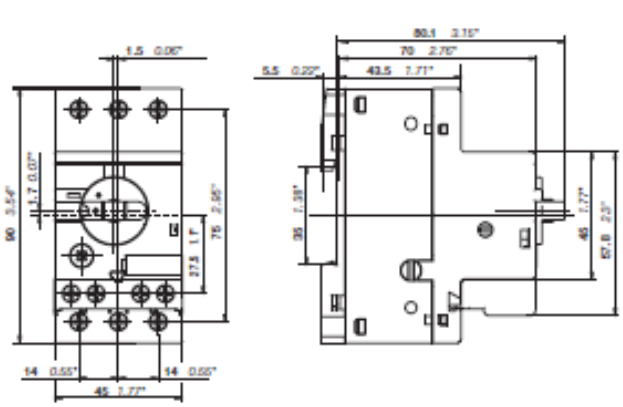

MS116 ≤ 16 A & MS116-HKF1-11 ≤ 16 A

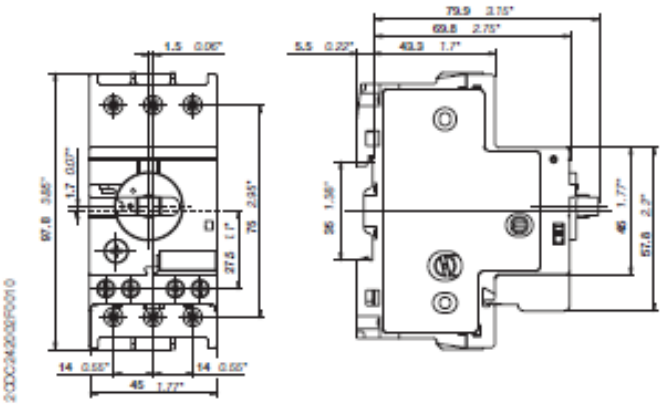

MS116 ≥ 20 A & MS116-HKF1-11 ≥ 20 A

ELEMECH INC. 630-499-7080 · www.elemechinc.com	Rev: 0	Device Tag: MMP1	
	Date: 8/20/2019		
Manuf.: . PNo: ABB: MS116-4.0	By: MBS	Job Number: EVC7837	Page # 1/2

Technical data

22-001-019

Main circuit – Utilization characteristics according to IEC/EN

Type		MS116	MS132	MO132	MS132-T
Standards		IEC/EN 60947–2, IEC/EN 60947-4-1, IEC/EN 60947-1			
Rated operational voltage U_e		690 V AC	690 V AC / 250 V DC	690 V AC	690 V AC
Rated frequency		50/60 Hz	DC, 50/60 Hz	50/60 Hz	50/60 Hz
Trip class		10A	10 (10A for 1SAM350000R1001)	-	10
Number of poles		3			
Duty time		100 %			
Mechanical durability		100000 cycles			
Electrical durability	up to 16 A	100000 cycles			
	20 ... 32 A	50000 cycles			
Rated impulse withstand voltage U_{imp}		6 kV			
Rated insulation voltage U_i		690 V			
Rated operational current I_e		See ordering details			
Rated instantaneous short-circuit current setting I_i		See ordering details			
Rated service short-circuit breaking capacity I_{cs}		See table "Short-circuit breaking capacity and back-up fuses"			
Rated ultimate short-circuit breaking capacity I_{cu}		See table "Short-circuit breaking capacity and back-up fuses"			

Main circuit – Utilization characteristics according to UL/CSA

Type		MS116, MS132, MO132
Standards		UL 508, CSA 22.2 No. 14
Maximum operational voltage		600 V AC
Manual motor controller ratings		See table "UL 508 – Manual motor controller"
Trip rating		125 % FLA
Motor ratings	Horse power	See table "Motor rating, three phase"
	Full load amps (FLA)	See table "Motor rating, three phase"
	Locked rotor amps (LRA)	See table "Motor rating, three phase"

HMIGTO4310

advanced touchscreen panel 640 x 480 pixels VGA- 7.5" - TFT - 96 MB

26-044-017

Main

Range of product	Magelis GTO
Product or component type	Advanced touchscreen panel
Display colour	65536 colours
Display size	7.5 inch
Supply	External source
Battery type	Lithium battery for internal RAM, autonomy: 100 days, charging time = 5 d, battery life = 10 yr

Complementary

Terminal type	Touchscreen display
Display type	Backlit colour TFT LCD
Display resolution	640 x 480 pixels VGA
Touch sensitive zone	1024 x 1024
Touch panel	Resistive film, 1000000 cycles
Backlight lifespan	50000 hours (white) at 25 °C
Brightness	16 levels - control by software 16 levels - control by touch panel
Character font	ASCII Chinese (simplified Chinese) Japanese (ANK, Kanji) Korean Taiwanese (traditional Chinese)
[Us] rated supply voltage	24 V DC
Supply voltage limits	19.2...28.8 V
Inrush current	<= 30 A
Power consumption in W	<= 5.5 W (when backlight is dimmed) <= 5 W (when backlight is OFF) <= 8 W (when power is not supplied to external devices) <= 12 W
Local signalling	SD card LED (green)faded card is not inserted or is not being accessed SD card LED (green)steady card is inserted COM2 LED (yellow)faded no data transmission COM2 LED (yellow)steady data is being transmitted Status LED (clear)faded power supply (OFF) Status LED (red)steady power supply (ON) Status LED (orange)flashing software starting up Status LED (green)steady operating Status LED (green)steady offline
Software designation	Vijeo Designer configuration software >= V6.1
Memory description	96 MB flash (EPROM)
Data backed up	512 kB internal RAM (SRAM)
Data storage equipment	SDHC card <= 32 GB SD card <= 32 GB

26-044-017

Downloadable protocols	Modbus TCP Schneider Electric Modicon Third party protocols Siemens Simatic Third party protocols Rockwell Automation Allen-Bradley Third party protocols Omron Sysmac Third party protocols Mitsubishi Melsec FIPWAY Schneider Electric Modicon Modbus Plus Schneider Electric Modicon Uni-TE Schneider Electric Modicon Modbus Schneider Electric Modicon
Integrated connection type	Ethernet RJ45, interface: IEEE 802.3 Ethernet RJ45, interface: 10BASE-T/100BASE-TX USB 2.0 port mini B USB USB 2.0 port USB type A COM2 serial link RJ45, interface: RS485, transmission rate: 187.5 kbps compatible with Siemens MPI COM2 serial link RJ45, interface: RS485, transmission rate: 2400...115200 bps COM1 serial link SUB-D 9, interface: RS232C, transmission rate: 2400...115200 bps
Product mounting	Flush mounting
Fixing mode	By 4 screw clamps
Front material	PPT
Enclosure material	PPT
Type of cooling	Natural convection
Width	218 mm
Height	173 mm
Depth	60 mm
Product weight	1.2 kg

Environment

Standards	EN 61131-2 IEC 61000-6-2 UL 508
Product certifications	CE C-Tick CULus KCC
Ambient air temperature for operation	0...55 °C
Ambient air temperature for storage	-20...60 °C
Relative humidity	10...90 % without condensation
Operating altitude	< 2000 m
IP degree of protection	IP65 front panel conforming to IEC 60529 IP20 rear panel conforming to IEC 60529
NEMA degree of protection	NEMA 4X front panel (indoor use)
Shock resistance	147 m/s² 3 chocs in each direction X, Y and Z conforming to EN/IEC 61131-2
Vibration resistance	1 gn (f = 9...150 Hz) conforming to EN/IEC 61131-2 X, Y, Z directions for 10 cycles (approx. 100 min) 3.5 mm (f = 5...9 Hz) conforming to EN/IEC 61131-2 X, Y, Z directions for 10 cycles (approx. 100 min)
Resistance to electrostatic discharge	6 kV contact discharge conforming to IEC 61000-4-2 level 3

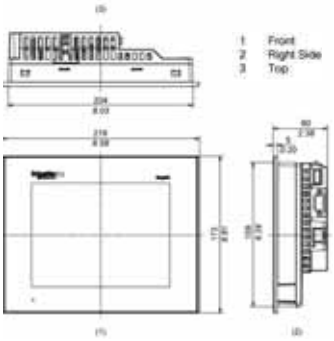

Schneider Electric

ELEMECH INC. 630-499-7080 · www.elemechinc.com	Rev: 0	Device Tag: OIU1	
	Date: 8/20/2019		
Manuf.: . PNo: Modicon: HMIGTO4310	By: MBS	Job Number: EVC7837	Page # 2/2

E1 Plus Solid-State Overload Relays

Allen-Bradley

28-005-037

Bulletin 193-EE – Three-Phase Devices

- Selectable Trip Class (10, 15, 20, 30)
- Selectable Auto/Manual-Auto Reset
- Screw-Type Control Terminals

Mounts to Contactor	Adjustment Range (A)	Cat. No. ❶
100-C09…100-C23	0.1…0.5	193-EEAB
	0.2…1.0	193-EEBB
	1.0…5.0	193-EECB
	3.2…16	193-EEDB
	5.4…27	193-EEEB
100-C30…100-C43	5.4…27	193-EEED
	9…45	193-EEFD
100-C60…100-C85	18…90	193-EEGE

Specifications

Cat. No.		193-ED1_B, 193-EE_B, and 592-EE_T
Main Circuits		
Rated Insulation Voltage U_i		690V AC
Rated Impulse Strength U_{imp}		6 kV AC
Rated Operating Voltage U_e		690V AC (IEC) / 600V AC (CSA/UL)
Terminal Cross-Sections:	Terminal Type	
	Terminal Screw	M5
Flexible-Stranded with Ferrule	Single Conductor Torque	2.5…16 mm² 2.5 N·m
	Two Conductor Torque	2.5…10 mm² ❶ 3.4 N·m
Coarse-Stranded / Solid	Single Conductor Torque	2.5…25 mm² 2.5 N·m
	Two Conductor Torque	6…16 mm² ❶ 3.4 N·m
Stranded / Solid	Single Conductor Torque	14…6 AWG 22 lb-in
	Two Conductor Torque	14…6 AWG ❶ 30 lb-in
Pozidrive Screwdriver Size		2
Slotted Screwdriver (mm)		1 x 6
Hexagon Socket Size (mm)		—
Control Circuits		
Rated Insulation Voltage U_i		690V AC
Rated Impulse Strength U_{imp}		6 kV AC
Rated Operating Voltage U_e		690V AC (IEC) / 600V AC (CSA/UL)
Rating Designation		B600
Rated Operating Current I_e		N.O. / N.C.
AC-15	12…120V	3 / 2
	220…240V	1.5 / 1.5
	380…480V	0.75 / 0.75
	500…600V	0.6 / 0.6
DC-13, at L/R ≤ 15 ms	24V	1.1 / 1.1
	110V	0.4 / 0.4
	220V	0.2 / 0.2
	440V	0.08 / 0.08
Thermal Current I_{the}		5 A
Contact Reliability		17V, 5 mA
Screw Terminal Cross-Sections:	Terminal Screw	M3
Flexible-Stranded with Ferrule	Single Conductor Torque	0.5…2.5 mm² 0.55 N·m
	Two Conductor Torque	0.25…1.5 mm² 0.55 N·m
Coarse-Stranded / Solid	Single Conductor Torque	0.5…4 mm² 0.55 N·m
	Two Conductor Torque	0.2…2.5 mm² 0.55 N·m
Stranded / Solid	Single Conductor Torque	24…10 AWG 5 lb-in
	Two Conductor Torque	24…12 AWG 5 lb-in
Screwdriver (mm)		#1 Pozidrive / 0.6 x 3.5 slotted
Cage Clamp Cross-Sections:		
Flexible-Stranded with Ferrule		0.25…1 mm²
Coarse-Stranded / Solid		0.2…1.5 mm²
Stranded / Solid		24…14 AWG

Environmental Ratings		
Ambient Temperature	Storage	-40…85°C (-40…185°F)
	Operating	-20…60°C (-4…140°F)
Humidity	Operating	5…95%, non-condensing
	Damp Heat	per IEC 68-2-3 and IEC 68-2-30
Vibration (per IEC 68-2-6)		3 G
Shock (per IEC 68-2-27)		30 G
Maximum Altitude		2000 m
Pollution Environment		Pollution Degree 3
Degree of Protection		IP20
Protection		
Type of Relay		Ambient Compensated, Time Delay, Phase
Nature of Relay		Solid-State
Trip Rating		120% FLA
Trip Class	Type ED	10
	Type EE	10, 15, 20, 30
Reset Mode	Type ED	Manual
	Type EE	Automatic or Manual
Electromagnetic Compatibility		
Electrostatic Discharge Immunity	Test Level	8 kV Air Discharge 6 kV Contact Discharge
	Performance Level	1 ❶❷
RF Immunity	Test Level	10 V/m
	Performance Level	1 ❶❷
Electrical Fast Transient/Burst Immunity	Test Level	4 kV
	Performance Level	1 ❶❷
Surge Immunity	Test Level	2 kV (L-E) 1 kV (L-L)
	Performance Level	1 ❶❷

Standards Compliance

IEC/EN 60947-4-1
IEC/EN 60947-5-1
CSA 22.2 No. 14
UL 508

Certifications

CE
cULus Listed
C-Tick
CCC

ELEMECH INC.
630-499-7080 · www.elemechinc.com

Rev: 0	Device Tag: OL1,2
Date: 8/20/2019	
By: MBS	Job Number: EVC7837
Manuf.: . PNo: Allen-Bradley: 193-EECB	Page # 1/1

Bulletin 800T/H

30.5 mm Push Buttons

Emergency Stop Operators

Allen-Bradley

29-005-117

2-Position Red Trigger Action Twist-to-Release, Non-Illuminated

- Tamper resistant – front-of-panel mounting and non-removable operator head
- Compliant with global E-stop standards, including EN ISO 13850 and EN 60947-5-5

Cat. No. 800T-TFXJET6

Cat. No. 800T-TFXLET6

Cat. No. 800T-TFXK6

Cat. No. 800H-TFRXT6

	Operator Position		Type 4/13			Type 4/4X/13
	Out	In	45 mm Plastic	63 mm Metal	Key Release	45 mm Plastic
Contact Type			Cat. No.∗❄‡	Cat. No.∗§	Cat. No.∗♣	Cat. No.∗❄‡
No contacts	—	—	**800T-TFXT6**	**800T-TFXLT6**	**800T-TFXK6**	**800H-TFRXT6**
1 N.C.	X	O	800T-TFXT6D2	800T-TFXLTD2	800T-TFXK6D2	800H-TFRXT6D2
1 N.O. - 1 N.C.	O X	X O	**800T-TFXT6A**	800T-TFXLT6A	**800T-TFXK6A**	**800H-TFRXT6A**
1 S.M.C.B.➤	X	O	800TC-TFXT6D4S	800TC-TFXLT6D4S	800TC-TFXK6D4S	800HC-TFRXT6D4S

∗ For finger-safe contact block terminals, add a **C** to the cat. no. Example: Cat. No. 800T**C**-TFXT6 or 800H**C**-TFRXT6.
❄ To order a device with a jumbo (60 mm) plastic head add the letter **J** after **X**. Example: Cat. No. 800T-TFX**J**T6A or 800H-TFRX**J**T6A.
‡ To order a jumbo head device with "E-STOP" printed on the cap add the letters **JE** after **X**. Example: Cat. No. 800T-TFX**JE**T6 or 800H-TFRX**JE**T6.
§ To order a device with "E-STOP" engraved on the cap add the letter **E** after **L**. Example: Cat. No. 800TC-TFXL**E**T6D4S.
♣ Provided with two DO18 keys.
➤ Self-monitoring contact block.

Standards Compliance

UL 508

CCC

Certifications

UL Listed
(File No. E14840, E10314
Guide No. NKCR, NOIV)

CSA Certified
(File No. LR1234, LR11924)

CSA C22.2, No. 14

EN/IEC: 60947-5-1

800	T		– T	FX	T	6	D2
	a	*b*		*c*	*d*		*e*

a

Protection Rating	
Code	Description
T	Metal, Type 4/13
H	Plastic, Type 4/4X/13

b

Finger-Safe Guards	
Code	Description
Blank	No guards
C	Guards on terminals

c

Head Type‡		
800T Type 4/13 Code	Description	800H Type 4/4X/13 Code
FX	Standard (45 mm) mushroom head	FRX
FXJ	Jumbo (60 mm) mushroom head	FRXJ
FXJE	Jumbo (60 mm) mushroom head with "E-STOP"	FRXJE
FXK	45 mm mushroom head key release	—
FXL	63 mm anodized aluminum head	—
FXLE	63 mm anodized aluminum head with "E-STOP"	—

d

Release Function	
Code	Color
Blank	Key release⌘
T	Twise release

Note: X = Closed/O = Open
⌘ Configurable only with **FXK** head type.

e

Contact Block(s)			
Code	Operator Position Out	Operator Position In	Description
Blank	—	—	No contacts on operator
Standard			
D1	O	X	1 N.O.
D2	X	O	1 N.C.
D4	X	O	1 N.C.L.B.
A	O X	X O	1 N.O. - 1 N.C.
A1	O X	X O	1 N.O. - 1 N.C.L.B.
A5	X X	O O	2 N.C.L.B.
Pen*TUFF* (Low Voltage)			
D1V	O	X	1 N.O.
D2V	X	O	1 N.C.
D4V	X	O	1 N.C.L.B.
AV	O X	X O	1 N.O. - 1 N.C.
Class 1, Div. 2/Zone 2			
Logic Reed			
D1R	O	X	1 N.O.
D2R	X	O	1 N.C.
AR	O X	X O	1 N.O. - 1 N.C.
Sealed Switch			
D1P	O	X	1 N.O.
D2P	X	O	1 N.C.
AP	O X	X O	1 N.O. 1 N.C.
Stackable Sealed Switch			
D1Y	O	X	1 N.O.
D2Y	X	O	1 N.C.
AY	O X	X O	1 N.O. - 1 N.C.

30.5 mm Push Buttons

Allen-Bradley

29-005-002

800 T ___ – A 1 ___ A

a b c d e f

a

Protection Rating	
Code	Description
T	Metal, Type 4/13
H	Plastic, Type 4/4X/13

b

Finger-Safe Guards	
Code	Description
Blank	No guards
C	Guards on terminals

c

Operator Type		
800T Type 4/13	Description	800H Type 4/4X/13
Code		Code
A	Flush head	AR
B	Extended head	BR
D	Mushroom head	DR
DX	Mushroom head less color cap	DRX
—	Bootless guarded head	GR
—	Booted head	R*

d

Color Cap	
Code	Description
Blank	Used only when ordering Operator Type DX/DRX
1	Green
2	Black
3	Orange●

Color Cap	
Code	Description
4	Grey●
5	White●
6	Red
7	Blue
9	Yellow

e

Special Mushroom Head	
Code	Description
J§	Jumbo mushroom head — plastic
L§	Jumbo mushroom head — metal

Note: Special mushroom head options only apply to mushroom head operator type code D/DR (Table c).

f

Contact Block(s)	
Code	Description
Blank	No contacts
Standard	
D1	1 N.O.
D2	1 N.C.
D3	1 N.O.E.M.
D4	1 N.C.L.B.
D5	1 N.O. (Mini)
D6	1 N.C. (Mini)
A1	1 N.C.L.B. - 1 N.O.
A2	2 N.O.‡
A4	2 N.C.
A7	1 N.C.L.B. - 1 N.C.
A	1 N.O. - 1 N.C.
B	2 N.O. - 2 N.C.

Certifications

UL Listed
(File No. E14840, E10314
Guide No. NKCR, NOIV)

CSA Certified
(File No. LR1234, LR11924)

CSA C22.2, No. 14

Specifications*

Electrical Ratings		
Contact ratings		Refer to the contact ratings tables on page 10-4.
Dielectric strength		2200V for one minute, 1300V for one minute (Logic Reed)
Electrical design life cycles		1 000 000 at max. rated load, 200 000 at max. rated load (Logic Reed)
Mechanical Ratings		
Vibration		10…2000 Hz, 1.52 mm displacement (peak-to-peak) max./ 10 G max. (except Logic Reed)
Shock		1/2 cycle sine wave for 11 ms ≥ 25 G (contact fragility) and no damage at 100 G
Degree of protection		Type 1/4/12/13 (800T); Type 1/4/4X/12/13 (800H); EN/IEC 60529 IP66/65
Mechanical design life cycles		
Push buttons	(Momentary, non-illuminated)	10 000 000 min.
	(Momentary, illuminated)	250 000 min.
	(Push-pull/twist-to-release)	250 000 min.
Selector switches	(Non-illuminated)	1 000 000 min.
	(Illuminated, key-operated)	200 000 min.
Potentiometers		25 000 min.
All other devices		200 000 min.
Contact operation		Shallow, mini, and low-voltage contact blocks: Slow, double make and break Logic Reed and sealed switch contact blocks: Single break magnetic
Wire gauge/Terminal screw torque		#18…14 AWG (#18…10 Max Duty) / 6…8 lb•in
Typical operating forces Operators without contact blocks		Flush, extended button, standard mushroom, jumbo plastic mushroom: 2 lbs max. Jumbo and extended aluminum mushroom head: 3.95 lbs max. Maintained selector switch: 3.6 in•lb max.
Spring return selector switches		3.6 in•lb to stop, 0.2 in•lb to return
Illuminated push buttons and push-to-test pilot lights		5 lb max.
2-position push-pull		8.0 lb max. push or pull
3-position push-pull		8 lb max. push to in position or pull to center position (15 lb max. pull to out position)
Twist-to-release or push-pull		9 lbs max. push or pull 30 in•oz max. twist, 6 in•oz minimum return
Potentiometer		Rotational torque 3…12 in•oz; stopping torque 12 in•lb (minimum)
Contact blocks	Standard	1 lb
	Logic Reed	1 lb max.
	Sealed switch	3 lb max. at 0.205 in. plunger travel
	Stackable sealed switch	1 lb max.
	MaxDuty	1.4 lb max.
	PenTUFF	1.4 lb max.
	Self Monitoring	1.6 lb
Environment		
Temperature range	Operating	-40…+131 °F (-40…+55 °C)
	Storage	-40…+185 °F (-40…+85 °C)
Note: Operating temperatures below freezing are based on the absence of moisture and liquids. Consult your local Rockwell Automation sales office or Allen-Bradley distributor for use in lower temperature applications.		
Humidity		50…95% RH from 77…140 °F (25…60 °C) per Procedure IV of MIL-STD-810C, Method 507.1 cycling test

ELEMECH INC.
630-499-7080 · www.elemechinc.com

Rev: 0	Device Tag: PB2		
Date: 8/20/2019			
Manuf.: . PNo: Allen-Bradley: 800H-AR2D1	By: MBS	Job Number: EVC7837	Page # 1/1

Modicon M340 automation platform
Discrete I/O modules

Schneider Electric

33-044-127

Discrete input modules

Type of current	Input voltage	Connection by (1)	IEC/EN 61131-2 conformity	No. of channels (common)	Reference	Weight kg
~	100...120 V	Screw or spring-type 20-way removable terminal block	Type 3	16 isolated inputs (1 x 16)	**BMX DAI 1604**	0.115

Characteristics of AC input modules

Module				BMX DAI 1604
Number of inputs				16
Commons		Number		1
Connection				Spring or screw-type 20-way removable terminal block
Nominal input values		Voltage	V	100...120 ~
		Current	mA	3
		Frequency	Hz	50/60
Input limit values	At state 1	Voltage	V	≥ 74
		Current	mA	≥ 2.5
	At state 0	Voltage	V	≤ 20
		Current	mA	≤ 1
	Frequency		Hz	47...63
	Sensor power supply (ripple included)		V	85...132
	Current peak on activation	At nominal voltage	mA	240
Input impedance at nominal voltage and F = 55 Hz			kΩ	13
Response time (filtering)		Activation	ms	15
		Deactivation	ms	20
IEC/EN 61131-2 conformity				Type 1
Compatibility with 2-wire/3-wire sensors				IEC/EN 60947-5-2
Protection of inputs				Use one 0.5 A fast-blow fuse per group of channels
Insulation resistance			MΩ	>10 at 500 V ⎓
Dielectric strength			V rms	1,500 - 50/60 Hz for 1 minute (up to 4,000 m)
Type of input				Resistive
Sensor voltage control threshold		OK	V	> 82
		Fault	V	< 40
Reliability	MTBF in hours	At $T_{ambient}$ = 30°C		1,504,958
Consumption		Typical	mA	See power consumption table page 43427-EN/2
Maximum dissipated power			W	3.8
Temperature derating				None

- Electrical qualities and self-extinguishing capacity of insulating materials: UL 746C, UL 94.
- Hazardous areas calssification: CSA 22.2 No. 213, Class I, Division 2, Groups A, B, C and D.

ELEMECH INC. 630-499-7080 · www.elemechinc.com	Rev: 0	Device Tag: PLC1	
	Date: 8/20/2019		
Manuf.: . PNo: Modicon: BMXDAI1604	By: MBS	Job Number: EVC7837	Page # 1/1

Modicon M340 automation platform

Power supply modules

Schneider Electric

33-044-132

Power supply modules *(1)*						
Line supply	**Available power** *(2)*				**Reference**	**Weight kg**
	3.3 V ⎓ *(3)*	**24 V rack ⎓** *(3)*	**24 V sensor ⎓** *(4)*	**Total**		
100...240 V ∼	8.3 W	16.8 W	10.8 W	20 W	**BMX CPS 2000**	0.300

∼ power supply module				**BMX CPS 2000**	
Primary	Voltages	Nominal	**V**	100...240 ∼	
		Limit (ripple included)	**V**	85...264 ∼	
	Frequencies	Nominal/limit	**Hz**	50-60/47-63	
	Power	Apparent	**VA**	70	
	Current	Input nominal I rms	**A rms**	0.61 at 115 V ∼; 0.31 at 240 V ∼	
	Initial power-up at 25°C *(1)*		**V**	**120 ∼**	**240 ∼**
		I inrush	**A**	≤ 30	≤ 60
		I^2t on activation	**A^2s**	≤ 0.5	≤ 2
		It on activation	**As**	0.03	0.06
	Micro-break duration	Line (accepted)	**ms**	≤ 10	
	Integrated protection			With internal fuse (not accessible)	
Secondary	Useful power	Max. overall	**W**	20	
		Max. on 3.3 V ⎓ and 24 V ⎓ rack output voltages	**W**	16.8	
	3.3 V ⎓ voltage *(2)*	Nominal voltage	**V**	3.3	
		Nominal current	**A**	2.5	
		Power (typical)	**W**	8.3	
	24 V rack ⎓ voltage *(3)*	Nominal voltage	**V**	24 ⎓	
		Nominal current	**A**	0.7	
		Typical power	**W**	16.8	
	24 V ⎓ sensor voltage *(4)*	Nominal voltage	**V**	24 ⎓	
		Nominal current	**A**	0.45	
		Typical power	**W**	10.8	
	Integrated protection on the voltages *(5)*			Yes, against overloads, short-circuits and overvoltages	
Maximum dissipated power			**W**	8.5	
Insulation	Dielectric strength	Primary/secondary (24 V/3.3 V)	**V rms**	1500	
		Primary/secondary (sensor 24 V)	**V rms**	2300	
		Primary/ground	**V rms**	1500	
		24 V sensor output/ground	**V rms**	500	
	Insulation resistance	Primary/secondary and primary/ground	**MΩ**	≥ 100	

Modicon M340 automation platform

Schneider Electric

33-044-135

Racks

Description	Type of module to be inserted	No. of slots (1)	Reference	Weight kg
Racks	BMX CPS power supply, BMX P34 processor, I/O modules and application-specific modules (counter, motion control and communication)	4	**BMX XBP 0400**	0.630
		6	**BMX XBP 0600**	0.790
		8	**BMX XBP 0800**	0.950
		12	**BMX XBP 1200**	1.270

Accessories

Description	For use with	Unit reference	Weight kg
Shielding connection kits comprising: - a metal bar - two sub-bases	BMX XBP 0400 rack	**BMX XSP 0400**	0.280
	BMX XBP 0600 rack	**BMX XSP 0600**	0.310
	BMX XBP 0800 rack	**BMX XSP 0800**	0.340
	BMX XBP 1200 rack	**BMX XSP1200**	0.400
Spring clamping rings Sold in lots of 5	Cables with 1.5…6 mm² cross-section	**STB XSP 3010**	0.050
	Cables with 5…11 mm² cross-section	**STB XSP 3020**	0.070
Protective covers (replacement parts) Sold in lots of 5	Unoccupied slots on BMX XBP ●●00 rack	**BMX XEM 010**	0.005

(1) Number of slots taking the processor module, I/O modules and application-specific modules (excluding power supply module).

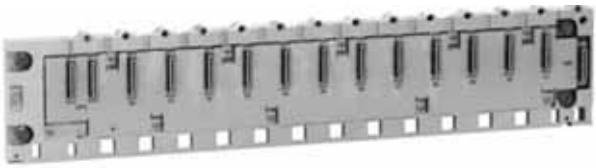

BMX XBP 1200

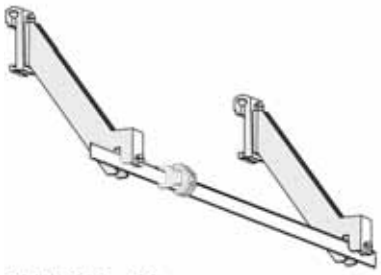

BMX XSP ●●00

STB XSP 30●0

ELEMECH INC. 630-499-7080 · www.elemechinc.com	Rev: 0	Device Tag: PLC1	
	Date: 8/20/2019		
Manuf.: . PNo: Modicon: BMXXBP0600	By: MBS	Job Number: EVC7837	Page # 1/1

Modicon M340 automation platform

Processor modules

Schneider Electric

33-044-138

Performance BMX P34 20, 4 racks

1,024 discrete I/O **256 analog I/O** **36 application-specific channels**	4,096 Kb integrated	2 Ethernet Modbus/ TCP networks	Modbus serial link Ethernet network	**BMX P34 2020**	0.205

Characteristics and performance

Processor

					BMX P34 2020
Maximum configuration	No. of racks	4, 6, 8 or 12 slots			2
	Max. number of slots for processor and modules (excluding power supply module)				24
Functions	Max. no. *(1)*	Discrete I/O			512
		Analog I/O			128
		Control channels			Programmable loops (via CONT-CTL process control EFB library)
		Application-specific channels	Number		20
			Type		Counter modules 2 channels (60 kHz) ou 8 channels (10 kHz) Motion control module 2 channels with PTO outputs "*Pulse Train Output*" for servo drives Serial link integrated in processor (except BMX P34 2030 model)
		Motion control			Module 2 channels with PTO outputs "Pulse Train Output" for servo drives
					–
	Integrated connections	Ethernet Modbus/TCP			1 RJ45 port, 10/100 Mbit/s, with Transparent Ready class B10 standard web server
		CANopen master bus			–
		Serial link			1 RJ45 port, Modbus master/slave RTU/ASCII or character mode (non-isolated RS 232C/RS 485), 0.3...38.2 Kbit/s
		USB port			1 slave port, 12 Mbit/s
	Communication module	Ethernet Modbus/TCP 10/100 Mbit/s			1 RJ45 port, with: - Transparent Ready class B30 standard web server with BMX NOE 0100 module - Transparent Ready class C30 configurable web server with BMX NOE 0110 module
	Real-time clock	RTC			Yes. Backed up: Typical 6 weeks during 5 years and 4 weeks during 10 years, at 40 °C (operating temperature), 30 °C (storage temperature)
Internal user RAM	Total capacity			**Kb**	2,048
	Program, constants and symbols			**Kb**	1,792
	Data			**Kb**	128
Memory card	Supplied as standard (reference BMX RMS 008MP)				Backup of program, constants, symbol and data
					Activation of standard web server, class B10 Standard Web server area 2 Mb
	To be ordered separately (BMX RMS 008MPF or BMX RMS 008MPF reference)				–
					–
					Activation of standard web server, class B10 Standard Web server area 2 Mb
Maximum size of object areas	Located internal bits	Maximum		**bits**	16,250 %Mi
		Default		**bits**	256 %Mi
	Located internal data	Maximum		**Bytes**	32,464 %MWi internal words, 32,760 %KWi constant words
		Default		**Bytes**	512 %MWi internal words, 128 %KWi constant words
	Max. unlocated internal data			**Kb**	128 *(2)*
Application structure	Master task				1 cyclic or periodic
	Fast task				1 periodic
	Auxiliary tasks				–
	Event tasks				32 (including 2 with priority)
Execution time for one instruction	Boolean			**µs**	0.18
	On words or fixed point arithmetic	% MS single-length		**µs**	0.38
		% MD double-length		**µs**	0.26
	On floating points	% MF		**µs**	1.74
No. of Kinstructions executed per ms	100% Boolean			**Kinst/ ms**	5.4
	65% Boolean and 35% fixed arithmetic			**Kinst/ ms**	4.2
System overhead	Master task			**ms**	1.05
	Fast task			**ms**	0.20
Power consumption		With 24 V ⎓ voltage		**mA**	95

ELEMECH INC. 630-499-7080 · www.elemechinc.com	Rev: 0	Device Tag: PLC1	
	Date: 8/20/2019		
Manuf.: . PNo: Modicon: BMXP342020	By: MBS	Job Number: EVC7837	Page # 1/1

Modicon M340 automation platform

Discrete I/O modules

33-044-147

Discrete output modules						
Type of current	Output voltage	Connection by *(1)*	IEC/EN 61131-2 conformity	No. of channels (common)	Reference	Weight kg
⎓ or ∼ relay	24 V ⎓/2 A, 240 V ∼/2 A	Screw or spring-type 20-way removable terminal block	Yes	16 non-protected outputs (2 x 8)	**BMX DRA 1605**	0.150

Characteristics of relay output modules

Module				BMX DRA 1605			
Number of inputs				16			
Commons		Number		2			
Connection				al block			
Limit operating voltages		DC	V	24...125 ⎓ (resistive load)			
		AC	V	200...264 ∼ (Cos φ = 1)			
Thermal current			A	2			
Switching load		Minimum	mA	1 at 5 V ⎓			
Electrical life				**24 V**	**100 V**	**200 V**	**240 V**
AC load		Power cos φ = 0.7	VA	–		300 *(1)*, 80 *(2)*	240 *(1)*, 72 *(2)*
		Power cos φ = 0.35	VA	–		200 *(1)*, 60 *(2)*	120 *(1)*, 36 *(2)*
DC load		Power	W	24 *(1)*, 7.2 *(2)*	10 *(1)*, 3 *(2)*	–	–
Voltage				**24 V**	**100 V**	**200 V**	**240 V**
AC load	Resistive loads AC-12	Power	VA	–			
	Inductive loads AC-15 (cos φ = 0.3)	Power	VA	–		200 *(1)*, 60 *(2)*	120 *(1)*, 36 *(2)*
	Inductive loads AC-14 (cos φ = 0.7)	Power	VA	–		300 *(1)*, 80 *(2)*	240 *(1)*, 72 *(2)*
DC load	Resistive loads DC-12	Power	W	24 *(4)*, 40 *(13)*	–		
	Inductive loads DC-13 *(14)*	Power	W	24 *(1)*, 7.2 *(2)*	10 *(1)*, 3 *(2)*	–	
Response time		Activation	ms	< 10			
		Deactivation	ms	< 12			
Built-in protection	Against overloads and short-circuits			None. Use a fast-blow fuse per channel or group of channels			
	Against AC inductive overvoltages			None. Use an RC circuit or ZNO surge limiter appropriate to the voltage in parallel on each output			
	Against DC inductive overvoltages			None. Use a discharge diode on each output			
Insulation resistance			MΩ	> 10 at 500 V ⎓			
Dielectric strength			V rms	2,000 - 50/60 Hz for 1 minute			
Consumption		Typical	mA	See power consumption table page 43427-EN/2			
Dissipated power			W	3			
Temperature derating				None			

Sync DIN Rail Power Supply
24V 30W 1 Phase (NEC Class 2) / DRS-24V30W1NZ

37-323-009

Model Number: DRS-24V30W1NZ
Unit Weight: 0.11 kg (0.24 lb)
Dimensions (L x W x D): 75 x 21 x 89.5 mm (2.95 x 0.83 x 3.52 inch)

Safety Standards

CB Certified for worldwide use

Sync DIN Rail Power Supply

Model Number	Input Voltage Range	Rated Output Voltage	Rated Output Current
DRS-24V30W1NZ	85-264Vac (120-375Vdc)	24Vdc	1.25A

Model Numbering

DR	S –	24V	30W	1	N	Z
DIN Rail	Product Series S – Sync Series	Output Voltage	Output Power	Single Phase	NEC Class 2	Without DC OK Relay Contact

Specifications

Input Ratings / Characteristics

Nominal Input Voltage		100-240Vac
Input Voltage Range		85-264Vac
Nominal Input Frequency		50-60Hz
Input Frequency Range		47-63Hz
DC Input Voltage Range*		120-375Vdc
Input Current		< 0.55A @ 115Vac, < 0.35A @ 230Vac
Efficiency at 100% Load		> 87.5% @ 115Vac, > 88.0% @ 230Vac
Max Power Dissipation	0% load	< 0.5W @ 115Vac & 230Vac
	100% load	< 4.5W @ 115Vac & 230Vac
Max Inrush Current (Cold Start)		< 20A @ 115Vac, < 40A @ 230Vac
Leakage Current (Neutral to PE terminal)		< 0.5mA @ 264Vac

*Fulfills test conditions for DC input. Safety approval for DC input can be obtained upon request.

Output Ratings / Characteristics**

Nominal Output Voltage	24Vdc
Factory Set Point Tolerance	24Vdc ± 2%
Output Voltage Adjustment Range	24-28Vdc
Output Current	1.25A (30W max.)
Output Power	30W
Line Regulation	< 0.5% (@ 85-264Vac, 100% load)
Load Regulation	< 1.0% (@ 85-264Vac, 0-100% load)
PARD*** (20MHz)	< 75mVpp @ > 0°C to 70°C < 150mVpp @ 0°C to -20°C
Rise Time	< 30ms @ nominal input (100% load)
Start-up Time	< 2,500ms @ 115Vac (100% load) < 1,000ms @ 230Vac (100% load)
Hold-up Time	> 20ms @ 115Vac (100% load) > 100ms @ 230Vac (100% load)
Dynamic Response (Overshoot & Undershoot O/P Voltage)	± 5% @ 85-264Vac input, 0-100% load (Slew Rate: 0.1A/µS, 50% duty cycle @ 5Hz to 1KHz)
Start-up with Capacitive Loads	3,000µF Max

**For power de-rating from < -10°C to -20°C, and 55°C to 70°C, see power de-rating on page 3.
***PARD is measured with an AC coupling mode, 5cm wires, and in parallel with 0.1µF ceramic capacitor & 47µF electrolytic capacitor.

Mechanical

Case Cover / Chassis		Plastic
Dimensions (L x W x D)		75 x 21 x 89.5 mm (2.95 x 0.83 x 3.52 inch)
Unit Weight		0.11 kg (0.24 lb)
Indicator		Green LED (DC OK)
Cooling System		Convection
Terminal	Input	3 Pins (Rated 300V/16A)
	Output	2 Pins (Rated 300V/16A)
Wire	Input / Output	AWG 22-12 / AWG 20-12
Mounting Rail		Standard TS35 DIN Rail in accordance with EN 60715
Noise (1 Meter from power supply)		Sound Pressure Level (SPL) < 25dBA

Environment

Surrounding Air Temperature	Operating	-20°C to +70°C (Cold start at -40°C @ 40% load)
	Storage	-40°C to +85°C
Power De-rating		-10°C to -20°C de-rate power by 2% / °C > 55°C de-rate power by 3.33% / °C
Operating Humidity		5 to 95% RH (Non-Condensing)
Operating Altitude		0 to 2,000 Meters (6,560 ft.)
Shock Test	Non-Operating	IEC60068-2-27, Half Sine Wave: 50G for a duration of 11ms; 3 times per direction, 9 times in total
	Operating	IEC 60068-2-27, Half Sine Wave: 10G for a duration of 11ms; 1 time in X axis
Vibration	Non-Operating	IEC 60068-2-6, Random: 5-500Hz; 2.09G_{rms}, 20 min per axis for all X, Y, Z directions
	Operating	IEC 60068-2-6, Sine Wave: 10-500Hz; 2G peak; displacement of 0.35mm; 1 octave per min; 60 min per axis for all X, Y, Z directions
Pollution Degree		2

Protections

Overvoltage	< 34.8V, SELV Output, Latch Mode
Overload / Overcurrent	105~160% of rated load current, Hiccup Mode, Non-Latching (Auto-Recovery)
Over Temperature	< 75°C Surrounding Air Temperature @ 100% load, Latch Mode
Short Circuit	Hiccup Mode, Non-Latching (Auto-recovery when the fault is removed)
Internal Fuse	T3.15A
Degree of Protection	IP20
Protection Against Shock	Class I with PE* connection

*PE: Primary Earth

37-323-009

Reliability Data

MTBF	Telcordia SR-332	> 700,000 hrs	I/P: 115Vac & 230Vac, O/P: 100% load, Ta: 25°C
	MIL-HDBK-217F	260,000 hrs	I/P: 115Vac & 230Vac, O/P: 100% load, Ta: 25°C
Expected Cap Life Time		10 years (115ac & 230Vac, 50% load @ 40°C)	

Safety Standards / Directives

Safety Entry Low Voltage		SELV (EN 60950)
Electrical Safety	TUV Bauart	EN 60950-1
	UL/cUL recognized	UL 60950-1, CSA C22.2 No. 60950-1 (File No. E191395)
	CB Scheme	IEC 60950-1, Limited Power Source (LPS)
Industrial Control Equipment	UL/cUL listed	UL 508 and CSA C22.2 No. 107.1-01 (File No. E315335)
Class 2 Power Supply	UL/cUL recognized	UL 60950-1, CSA C22.2 No. 60950-1(File No. E191395)
CE		In conformance with EMC Directive 2004/108/EC and Low Voltage Directive 2006/95/EC
Material and Parts		RoHS Directive 2011/65/EU Compliant
Galvanic Isolation	Input to Output	3.0KVac
	Input to Ground	3.0KVac
	Output to Ground	0.5KVac

Dimensions

L x W x D: 75 x 21 x 89.5 mm [2.95 x 0.83 x 3.52 inch]

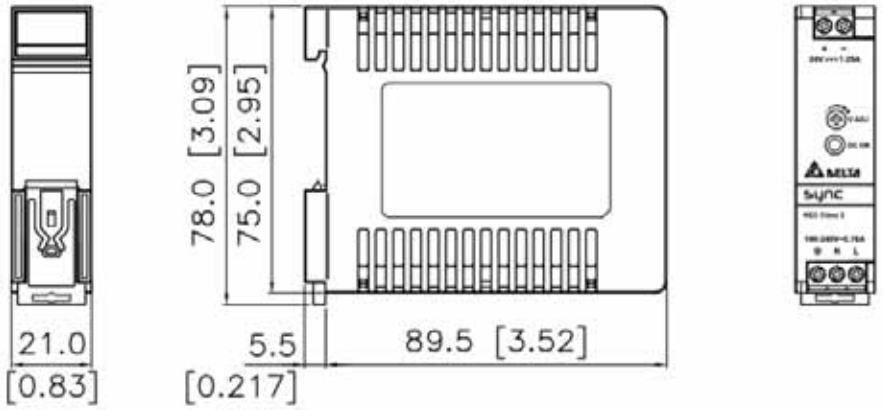

ELEMECH INC. 630-499-7080 · www.elemechinc.com	Rev: 0	Device Tag: PS1	
	Date: 8/20/2019		
Manuf.: . PNo: Delta: DRS-24V30W1NZ	By: MBS	Job Number: EVC7837	Page # 3/3

Softstarters
Type PSR

Directives and standards

No. 2006/95/EC	Low voltage equipment
No. 2004/108/EC	Electromagnetic compability
EN 60947-1	Low voltage switchgear and control gear – Part 1: General rules
EN 60947-4-2	AC semiconductor motor controllers and starters
UL 508	Industrial Control Equipment
CSA C22.2 No 14	Industrial Control Equipment

ABB

88-001-002

Rated operational voltage U_e, 208...600 V AC

Rated control supply voltage, U_s, 100...240 V AC, 50/60 Hz

IEC				UL/CSA					Catalog number
Rated operational power			current	Rated operational power				current	
230 V	400 V	500 V		200 / 208 V	220 / 240 V	440 / 480 V	550 / 600 V		
P_e kW	P_e kW	P_e kW	I_e A	P_e hp	P_e hp	P_e hp	P_e hp	FLA A	
0.75	1.5	2.2	3.9	0.5	0.75	2	2	3.4	PSR3-600-70
1.5	3	4	6.8	1	1.5	3	5	6.1	PSR6-600-70
2.2	4	4	9	2	2	5	7.5	9	PSR9-600-70
3	5.5	5.5	12	3	3	7.5	10	11	PSR12-600-70
4	7.5	7.5	16	3	5	10	10	15.2	PSR16-600-70
5.5	11	15	25	7.5	7.5	15	20	24.2	PSR25-600-70
7.5	15	18.5	30	7.5	10	20	25	28	PSR30-600-70
7.5	18.5	22	37	10	10	25	30	34	PSR37-600-70
11	22	30	45	15	15	30	40	46.2	PSR45-600-70
15	30	37	60	20	20	40	50	59.4	PSR60-600-70
22	37	45	72	20	25	50	60	68	PSR72-600-70
22	45	55	85	25	30	60	75	80	PSR85-600-70
30	55	55	105	30	40	75	100	104	PSR105-600-70

Rated operational voltage U_e, 208...600 V AC

Rated control supply voltage, U_s, 24 V AC/DC

0.75	1.5	2.2	3.9	0.5	0.75	2	2	3.4	PSR3-600-11
1.5	3	4	6.8	1	1.5	3	5	6.1	PSR6-600-11
2.2	4	4	9	2	2	5	7.5	9	PSR9-600-11
3	5.5	5.5	12	3	3	7.5	10	11	PSR12-600-11
4	7.5	7.5	16	3	5	10	10	15.2	PSR16-600-11
5.5	11	15	25	7.5	7.5	15	20	24.2	PSR25-600-11
7.5	15	18.5	30	7.5	10	20	25	28	PSR30-600-11
7.5	18.5	22	37	10	10	25	30	34	PSR37-600-11
11	22	30	45	15	15	30	40	46.2	PSR45-600-11
15	30	37	60	20	20	40	50	59.4	PSR60-600-11
22	37	45	72	20	25	50	60	68	PSR72-600-11
22	45	55	85	25	30	60	75	80	PSR85-600-11
30	55	55	105	30	40	75	100	104	PSR105-600-11

Accessories

88-001-002

For softstarter type	Catalog number
Connection kit	
PSR3...PSR16 with MS116 or MS132	PSR16-MS116
PSR25...PSR30 with MS132-12 ... MS132-32	PSR30-MS132
PSR37...PSR45 with MS450	PSR45-MS450
PSR60...PSR105 with MS495	PSR105-MS495
Fan	
PSR3...PSR45	PSR-FAN3-45A
PSR60...PSR105	PSR-FAN60-105A
Terminal enlargements	
PSR60...PSR105 Wire range mm^2 1 x 10...50 mm^2, 2 x 10...25 mm^2	PSLW-72
FieldBusPlug connection accessory	
PSR3...PSR105	PS-FBPA

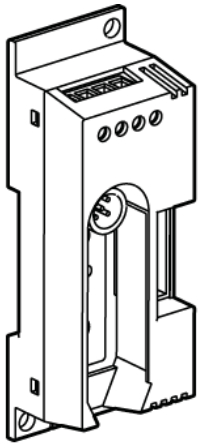

PSR-FBPA

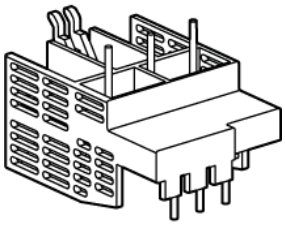

PSR16-MS116

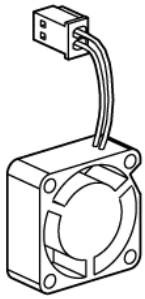

PSR-FAN

ELEMECH INC. 630-499-7080 · www.elemechinc.com	Rev: 0	Device Tag: SMS1	
	Date: 8/20/2019		
Manuf.: . PNo: ABB: PSR6-600-70	By: MBS	Job Number: EVC7837	Page # 2/3

Technical data

ABB

88-001-002

Softstarter types	PSR3	PSR6	PSR9	PSR12	PSR16	PSR25	PSR30	PSR37	PSR45	PSR60	PSR72	PSR85	PSR105
Rated insulation voltage U_i	600 V												
Rated operational voltage U_e	208...600 V +10%/-15%, 50/60 Hz ±5%												
Rated control supply voltage U_s	100...240 V AC, 50/60Hz ±5% or 24 V AC/DC, +10%/-15%,												
Starting capacity at I_e	4 x I_e for 6 sec.												
Number of starts per hour	See table below for details												
standard	10[1]												
with aux. fan	20[1]												
Ambient temperature													
during operation	-25...+60 °C (-13...+140 F)[2]												
during storage	-40...+70 °C (-40...+158 F)												
Maximum altitude	4000 m (13123 ft)[3]												
Degree of protection													
main circuit	IP20							IP10					
control circuit	IP20												
Power consumption													
Supply circuit													
at 100...240 V AC	12 VA							10 VA					
at 24 V AC/DC	5 W												
Max. Power loss at rated I_e	0.7 W	2.9 W	6.5 W	11.5 W	20.5 W	25 W	36 W	5.5 W	8.1 W	3.6 W	5.2 W	7.2 W	6.6 W
Connectable cable area													
main circuit	1 x 0.75...2.5 mm² (19...14 AWG)					1 x 2.5...10 mm² (14...8 AWG)		1 x 6...35 mm² (10...2 AWG)		1 x 10...95 mm² (8...4/0 AWG)			
	2 x 0.75...2.5 mm² (19...14 AWG)					2 x 2.5...10 mm² (14...8 AWG)		2 x 6...16 mm² (10...6 AWG)		2 x 6...35 mm² (10...2 AWG)			
control circuit	1 x 0.75...2.5 mm² (19...14 AWG)					1 x 0.75...2.5 mm² (19...14 AWG)							
	2 x 0.75...2.5 mm² (19...14 AWG)					2 x 0.75...1.5 mm² (19...16 AWG)							
Signal relays for run signal													
resistive load	3 A					3 A							
AC-15 (contactor)	0.5 A					0.5 A							
for top of ramp signal													
resistive load	–					3 A							
AC-15 (contactor)	–					0.5 A							
LED													
for On/Ready	Green												
for Run/Top of ramp	Green												
Settings													
Ramp time during start	1...20 sec.												
Ramp time during stop	0...20 sec.												
Initial and end voltage	40...70%												

[1] Valid for 50% on time and 50% off time. If other data is required, contact your local ABB office.
[2] Above 40 °C (104 °F) up to max. 60 °C (140 °F) reduce the rated current with 0.8% per °C (0.44% per °F).
[3] When used at high altitudes, above 1000 meters (3281 ft) up to 4000 meters (13123 ft), de-rate the rated current using the following formula.

$[\% \text{ of } I_e = 100 - \frac{x-1000}{150}]$ x = actual altitude of the softstarter in meter. $[\% \text{ of } I_e = 100 - \frac{y-3280}{497}]$ y = actual altitude of the softstarter in feet.

For derating of voltage, contact your local ABB office.

Number of starts per hour using PSR softstarters

Starts/hour without auxiliary fan

Motor current I_e	10	20	30	40	50	60	80	100
3 A	PSR3							PSR6
6 A	PSR6					PSR9		
9 A	PSR9			PSR12			PSR16	PSR25
12 A	PSR12			PSR16	PSR25		PSR30	
16 A	PSR16	PSR25			PSR30		PSR37	
25 A	PSR25	PSR30	PSR37			PSR45		PSR60
30 A	PSR30	PSR37		PSR45		PSR60		PSR72
37 A	PSR37	PSR45		PSR60		PSR72	PSR85	PSR105
45 A	PSR45		PSR60		PSR72	PSR85	PSR105	-
60 A	PSR60		PSR72	PSR85	PSR105		-	-
72 A	PSR72	PSR85	PSR105		-	-	-	-
85 A	PSR85	PSR105		-	-	-	-	-
105 A	PSR105	-	-	-	-	-	-	-

Starts/hour with auxiliary fan

Motor current I_e	10	20	30	40	50	60	80	100
3 A	PSR3							
6 A	PSR6							PSR9
9 A	PSR9				PSR12			
12 A	PSR12					PSR16	PSR25	
16 A	PSR16		PSR25				PSR30	
25 A	PSR25		PSR30	PSR37				PSR45
30 A	PSR30		PSR37		PSR45			
37 A	PSR37		PSR45				PSR60	
45 A	PSR45			PSR60			PSR72	
60 A	PSR60			PSR72		PSR85	PSR105	-
72 A	PSR72			PSR85	PSR105		-	-
85 A	PSR85		PSR105		-	-	-	-
105 A	PSR105		-	-	-	-	-	-

Data based on an ambient temperature of 40° (104 °F), starting current of 4 x I_e and ramp time 6 seconds. For more optimized selection or to use PSR for heavy-duty starts, please use the softstarter selection tool.

30.5 mm Push Buttons

Selector Switches

Allen-Bradley

39-005-009

800 T _____ – J 2 _____ C

a b c d e f

a

Protection Rating	
Code	Description
T	Metal, Type 4/13
H	Plastic, Type 4/4X/13

b

Finger-Safe Guards	
Code	Description
Blank	No guards
C	Guards on terminals

c

Knob Insert Colors		
800T Type 4/13	Description	800H Type 4/4X/13
Code		Code
J	White	JR
JX	Packet of colored inserts*	JRX
Metal Wing Lever Colors®		
Code	Color	Code
JA	Red	—
JG	Grey	—

d

Knob/Lever Type Operators	
Standard Knob	
Code	Operator Function
2	Maintained
4	Spring return from left
5	Spring return from right
91	Spring return from both
Knob Lever®	
Code	Operator Function
17	Maintained
18	Spring return from left
19	Spring return from right
20	Spring return from both
Metal Wing Lever®	
Code	Operator Function
11	Maintained
15	Spring return from left
16	Spring return from right
141	Spring return from both
Coin Slot®	
Code	Operator Function
10	Spring return from both

e

Cam Option‡▲	
Code	Description
Blank	KB7 cam (std.)
KA1	KA1 cam
KA7	KA7 cam

e (cont'd)

Cam Option‡▲	
Code	Description
KC1	KC1 cam
KC7	KC7 cam
KD7	KD7 cam
KE7§	KE7 cam
KQ1	KQ1 cam
KQ7	KQ7 cam
KR1§	KR1 cam
KR7§	KR7 cam
KT1§	KT1 cam
KT7§	KT7 cam
KU7§	KU7 cam

f

Contact Blocks	
Code	Description
Blank	No contacts on operator
Standard	
A	1 N.O. - 1 N.C. 1-**800T-XA** on white side
B	2 N.O. - 2 N.C. 2-**800T-XA**s — 1 on white side/1 on black side
PenTUFF (Low Voltage)	
AV	1 N.O. - 1 N.C. 1-**800T-XAV** on white side
BV	2 N.O. - 2 N.C. 2-**800T-XAV**s — 1 on white side/1 on black side

f (cont'd)

Contact Blocks▲	
Code	Description
Blank	No contacts
Class 1, Div. 2/Zone 2	
Logic Reed	
AR	1 N.O. - 1 N.C. 1-**800T-XAR** on white side
BR	2 N.O. - 2 N.C. 2-**800T-XAR**s — 1 on white side/1 on black side
Sealed Switch	
AP	1 N.O. - 1 N.C. 1-**800T-XAP** on white side
BP	2 N.O. - 2 N.C. 2-**800T-XAP**s — 1 on white side/1 on black side
Stackable Sealed Switch	
AY	1 N.O. - 1 N.C. 1-**800T-XAY** on white side
BY	2 N.O. - 2 N.C. 2-**800T-XAY**s — 1 on white side/1 on black side

* One insert of each color (blue, green, orange, red, and yellow).
® Only available on Bul. 800T, Type 4/13 operators.
‡ If an overlapping cam is required, consult your local distributor.
§ Not available with wing levers.
▲ See Table 1 for cam selections and associated targets.

Specifications*

Electrical Ratings		
Contact ratings		Refer to the contact ratings tables on page 10-4.
Dielectric strength		2200V for one minute, 1300V for one minute (Logic Reed)
Electrical design life cycles		1 000 000 at max. rated load, 200 000 at max. rated load (Logic Reed)
Mechanical Ratings		
Vibration		10…2000 Hz, 1.52 mm displacement (peak-to-peak) max./ 10 G max. (except Logic Reed)
Shock		1/2 cycle sine wave for 11 ms ≥ 25 G (contact fragility) and no damage at 100 G
Degree of protection		Type 1/4/12/13 (800T); Type 1/4/4X/12/13 (800H); EN/IEC 60529 IP66/65
Mechanical design life cycles		
Push buttons	(Momentary, non-illuminated)	10 000 000 min.
	(Momentary, illuminated)	250 000 min.
	(Push-pull/twist-to-release)	250 000 min.
Selector switches	(Non-illuminated)	1 000 000 min.
	(Illuminated, key-operated)	200 000 min.
Potentiometers		25 000 min.
All other devices		200 000 min.
Contact operation		Shallow, mini, and low-voltage contact blocks: Slow, double make and break Logic Reed and sealed switch contact blocks: Single break magnetic
Wire gauge/Terminal screw torque		#18…14 AWG (#18…10 Max Duty) / 6…8 lb•in
Typical operating forces Operators without contact blocks		Flush, extended button, standard mushroom, jumbo plastic mushroom: 2 lbs max. Jumbo and extended aluminum mushroom head: 3.95 lbs max. Maintained selector switch: 3.6 in•lb max.
Spring return selector switches		3.6 in•lb to stop, 0.2 in•lb to return
Illuminated push buttons and push-to-test pilot lights		5 lb max.
2-position push-pull		8.0 lb max. push or pull
3-position push-pull		8 lb max. push to in position or pull to center position (15 lb max. pull to out position)
Twist-to-release or push-pull		9 lbs max. push or pull 30 in•oz max. twist, 6 in•oz minimum return
Potentiometer		Rotational torque 3…12 in•oz; stopping torque 12 in•lb (minimum)
Contact blocks	Standard	1 lb
	Logic Reed	1 lb max.
	Sealed switch	3 lb max. at 0.205 in. plunger travel
	Stackable sealed switch	1 lb max.
	MaxDuty	1.4 lb max.
	PenTUFF	1.4 lb max.
	Self Monitoring	1.6 lb
Environment		
Temperature range	Operating	-40…+131 °F (-40…+55 °C)
	Storage	-40…+185 °F (-40…+85 °C)
Note: Operating temperatures below freezing are based on the absence of moisture and liquids. Consult your local Rockwell Automation sales office or Allen-Bradley distributor for use in lower temperature applications.		
Humidity		50…95% RH from 77…140 °F (25…60 °C) per Procedure IV of MIL-STD-810C, Method 507.1 cycling test

Certifications

UL Listed
(File No. E14840, E10314
Guide No. NKCR, NOIV)

CSA Certified
(File No. LR1234, LR11924)

CSA C22.2, No. 14

ELEMECH INC.
630-499-7080 · www.elemechinc.com

Manuf.: . PNo: Allen-Bradley: 800H-JR2A	Rev: 0	Device Tag: SS1,2,4-9	
	Date: 8/20/2019		
	By: MBS	Job Number: EVC7837	Page # 1/1

800T/H 30.5 mm

3-Position Selector Switch Devices, Non-Illuminated

39-005-011

800	T	___	– J	2	___	C
	a	b	c	d	e	f

a

Protection Rating	
Code	Description
T	Metal, Type 4/13
H	Plastic, Type 4/4X/13

b

Finger-Safe Guards	
Code	Description
Blank	No guards
C	Guards on terminals

c

Knob Insert Colors		
800T Type 4/13	Description	800H Type 4/4X/13
Code		Code
J	White	JR
JX	Packet of colored inserts★	JRX
Metal Wing Lever Colors‡		
Code	Color	Code
JA	Red	—
JG	Grey	—

d

Knob/Lever Type Operators	
Standard Knob	
Code	Operator Function
2	Maintained
4	Spring return from left
5	Spring return from right
91	Spring return from both
Knob Lever‡	
Code	Operator Function
17	Maintained
18	Spring return from left
19	Spring return from right
20	Spring return from both
Metal Wing Lever‡	
Code	Operator Function
11	Maintained
15	Spring return from left
16	Spring return from right
141	Spring return from both
Coin Slot‡	
Code	Operator Function
10	Spring return from both

e

Cam Option§Δ	
Code	Description
Blank	KB7 cam (std.)
KA1	KA1 cam
KA7	KA7 cam

Cam Option§Δ	
Code	Description
KC1	KC1 cam
KC7	KC7 cam
KD7	KD7 cam
KE7♣	KE7 cam
KQ1	KQ1 cam
KQ7	KQ7 cam
KR1♣	KR1 cam
KR7♣	KR7 cam
KT1♣	KT1 cam
KT7♣	KT7 cam
KU7♣	KU7 cam

f

Contact Blocks	
Code	Description
Blank	No contacts on operator
Standard	
A	1 N.O. - 1 N.C. 1-**800T-XA** on white side
B	2 N.O. - 2 N.C. 2-**800T-XA**s — 1 on white side/1 on black side
Pen**TUFF** (Low Voltage)	
AV	1 N.O. - 1 N.C. 1-**800T-XAV** on white side
BV	2 N.O. - 2 N.C. 2-**800T-XAV**s — 1 on white side/1 on black side
Code	Description
Blank	No contacts
Class 1, Div. 2	
Logic Reed	
AR	1 N.O. - 1 N.C. 1-**800T-XAR** on white side
BR	2 N.O. - 2 N.C. 2-**800T-XAR**s — 1 on white side/1 on black side
Sealed Switch	
AP	1 N.O. - 1 N.C. 1-**800T-XAP** on white side
BP	2 N.O. - 2 N.C. 2-**800T-XAP**s — 1 on white side/1 on black side
Stackable Sealed Switch	
AY	1 N.O. - 1 N.C. 1-**800T-XAY** on white side
BY	2 N.O. - 2 N.C. 2-**800T-XAY**s — 1 on white side/1 on black side

- CE Marked
- CSA Certified — File Nos. LR1234, LR11924
- CSA C22.2 — No. 14
- EN/IEC 60947-5-1
- EN/IEC 60947-5-5
- EN ISO 13850
- UL Listed — File Nos. E14840, E10314; Guide Nos. NKCR, NOIV, NISD

Table 1. Cam and Contact Block Functionality Table

Contact Block Suffix Code	Contact Block Side	Circuits	Cam Codes																																								
			KB7 (Std.)			KA1			KA7			KC1			KC7			KD7			KE7			KQ1			KQ7			KR1			KR7			KT1			KT7			KU7		
A / B / H / C	White	A	X	O	O	X	O	O	O	O	X	O	O	X	X	O	O	O	O	X	X	O	O	X	O	X	X	O	X	X	O	X	X	O	X	O	O	X	X	O	O	X	O	O
		B	O	O	X	O	X	O	O	X	O	O	X	O	O	X	O	O	X	O	O	X	X	O	X	O	O	X	O	O	X	O	O	X	O	X	O	O	O	O	X	O	X	O
B / H / C	Black	A	X	O	O	X	O	O	O	O	X	O	O	X	X	O	O	X	O	O	O	O	X	O	O	X	X	O	O	O	O	X	X	O	O	O	O	X	X	O	O	O	O	X
		B	O	O	X	O	X	O	O	X	O	X	O	O	O	O	X	O	X	O	X	X	O	O	X	O	O	X	O	X	X	O	O	X	X	X	X	O	O	X	X	X	X	O
H / C	White	A	X	O	O	X	O	O	O	O	X	O	O	X	X	O	O	O	O	X	X	O	O	X	O	X	X	O	X	X	O	X	X	O	X	O	O	X	X	O	O	X	O	O
		B	O	O	X	O	X	O	O	X	O	O	X	O	O	X	O	O	X	O	O	X	X	O	X	O	O	X	O	O	X	O	O	X	O	X	O	O	O	O	X	O	X	O
C	Black	A	X	O	O	X	O	O	O	O	X	O	O	X	X	O	O	X	O	O	O	O	X	O	O	X	X	O	O	O	O	X	X	O	O	O	O	X	X	O	O	O	O	X
		B	O	O	X	O	X	O	O	X	O	X	O	O	O	O	X	O	X	O	X	X	O	O	X	O	O	X	O	X	X	O	O	X	X	X	X	O	O	X	X	X	X	O

Note: X = Closed/O = Open

630-499-7080 · www.elemechinc.com

Rev: 0	Device Tag: SS3	
Date: 8/20/2019	Job Number: EVC7837	Page # 1/1
By: MBS		

Manuf.: . PNo: Allen-Bradley: 800H-JR5A

Metal-Oxide Varistors (MOVs)

Radial Lead Varistors > LA Varistor Series

Littelfuse

40-170-A000

PART NUMBER	MODEL SIZE DISC DIA. (mm)	DEVICE MODEL NUMBER BRAND-ING	MAXIMUM RATING (85°C) CONTINUOUS V_{RMS} $V_{M(AC)}$ (V)	V_{DC} $V_{M(DC)}$ (V)	TRANSIENT ENERGY 10 x 1000µs W_{TM} (J)	PEAK CURRENT 8 x 20µs I_{TM} (A)	SPECIFICATIONS (25°C) VARISTOR VOLT-AGE AT 1mA DC TEST CURRENT V_{NOM} MIN (V)	V_{NOM} MAX (V)	MAXIMUM CLAMPING VOLTAGE 8 x 20µs V_C (V)	I_{PK} (A)	TYPICAL CAPACI-TANCE f = 1MHz C (pF)
V130LA1	7	1301	130	175	11	1200	184	255	390	10	180
V130LA2	7	1302	130	175	11	1200	184	228	340	10	180
V130LA5	10	1305	130	175	20	2500	184	228	340	25	450
V130LA10A	14	130L10	130	175	38	4500	184	228	340	50	1000
V130LA20A	20	130L20	130	175	70	6500	184	228	340	100	1900
V130LA20B	20	130L20B	130	175	70	6500	184	220	325	100	1900

Absolute Maximum Ratings For ratings of individual members of a series, see Device Ratings and Specifications chart

	LA SERIES	UNITS
Continuous:		
Steady State Applied Voltage:		
AC Voltage Range ($V_{M(AC)RMS}$)	130 to 1000	V
DC Voltage Range ($V_{M(DC)}$)	175 to 1200	V
Transients:		
Peak Pulse Current (I_{TM})		
For 8/20µs Current Wave (See Figure 2)	1200 to 6500	A
Single Pulse Energy Range		
For 10/1000µs Current Wave (W_{TM})	11 to 360	J
Operating Ambient Temperature Range (T_A)	-55 to 85	°C
Storage Temperature Range (T_{STG})	-55 to 125	°C
Temperature Coefficient (αV) of Clamping Voltage (V_C) at Specified Test Current	<0.01	%/°C
Hi-Pot Encapsulation (Isolation Voltage Capability)	2500	V
(Dielectric must withstand indicated DC voltage for one minute per MIL-STD 202, Method 301)		
Insulation Resistance	1000	MΩ

Agency Approvals

Agency	Agency Approval	Agency File Number
c UL us	UL1449	E320116
VDE	CECC 42201-006 IEC 61051-1 IEC 61051-2 IEC 60950-1 (Annex Q) for 14mm and 20mm only	116895
CSA	22.2-1	91788
	CECC 42201-006 IEC 61051-1 IEC 61051-2 IEC 60950-1 (Annex Q) for 14mm and 20mm only	E1273/F

ELEMECH INC.
630-499-7080 · www.elemechinc.com

Manuf.: . PNo: Littelfuse: V130LA10A Assembly	Rev: 0	Device Tag: SUP1	
	Date: 8/20/2019		
	By: MBS	Job Number: EVC7837	Page # 1/1

STP Series Pluggable

Surge-Trap®

SURGE PROTECTIVE DEVICE

DIN-RAIL PLUGGABLE SPD FOR
ANSI/UL 1449 TYPE 1 AND 2 APPLICATIONS

Mersen
Expertise, our source of energy

40-030-002

RATINGS:

- **Volts (U_n):** 120-690VAC
- **Nominal Discharge Current Rating (I_n):** 10-20kA
- **Surge Capacity:** 75kA
- **Short-Circuit Current Rating (SCCR):** 200kA

APPROVALS:

- ANSI/UL 1449 4th Edition, Type 1 Component Assembly SPD, File E210793
- ANSI/IEEE C62.41.1, C62.41.2, C62.45
- RoHS Compliant

GENERAL PRODUCT SPECIFICATIONS

Mounting:	35mm DIN-Rail	Operating & Storage Temperature:	– 40°C to + 85°C
Wire Range:	4-14AWG Solid / Stranded CU	Visual End of Life Indicator:	RED = End of Life
Terminal Torque:	35.4 lbs-in	Remote End of Life Indicator:	NO/NC Dry Contact
Degree of Protection:	IP 20	Frequency:	50-60 Hz
Flammability:	UL94 V0		

1-POLE, SINGLE-PHASE, 2-WIRE

Catalog Number	Nominal Voltage (VAC)	Maximum Continuous Operating Voltage (MCOV, VAc)				Voltage Protection Rating (VPR, VAC)				replacement plug	I_n (kA)
		L-N	L-G	N-G	L-L	L-N	L-G	N-G	L-L	L-1	
STP120P07(M)	120	175	-	-	-	600	-	-	-	SP07U175	20
STP230P07(M)	240	275	-	-	-	600	-	-	-	SP07U275	20
STP277P07(M)	277	320	-	-	-	600	-	-	-	SP07U320	20
STP347P07(M)	347	420	-	-	-	800	-	-	-	SP07U420	10

2-POLE, SPLIT-PHASE, 3-WIRE

Catalog Number	Nominal Voltage (VAC)	Maximum Continuous Operating Voltage (MCOV, VAc)				Voltage Protection Rating (VPR, VAC)				replacement plug	I_n (kA)
		L-N	L-G	N-G	L-L	L-N	L-G	N-G	L-L	L1, L2	
STP240S07(M)	120/240	175	-	-	350	600	-	-	1800	SP07U175	20
STP480S07(M)	240/480	275	-	-	550	600	-	-	1200	SP07U275	20

3-POLE, 3-PHASE DELTA, 4-WIRE

Catalog Number	Nominal Voltage (VAC)	Maximum Continuous Operating Voltage (MCOV, VAc)				Voltage Protection Rating (VPR, VAC)				replacement plug	I_n (kA)
		L-N	L-G	N-G	L-L	L-N	L-G	N-G	L-L	L1, L2, L3	
STP240D07(M)	240	-	275	-	550	-	900	-	1800	SP07U275	20
STP480D07(M)	480	-	550	-	1100	-	1500	-	3000	SP07U550	10

3-POLE, 3-PHASE WYE, 4-WIRE

Catalog Number	Nominal Voltage (VAC)	Maximum Continuous Operating Voltage (MCOV, VAc)				Voltage Protection Rating (VPR, VAC)				replacement plug	I_n (kA)
		L-N	L-G	N-G	L-L	L-N	L-G	N-G	L-L	L1, L2, L3	
STP208Y07(M)	120/208	175	-	-	350	600	-	-	1200	SP07U175	20
STP480Y07(M)	277/480	320	-	-	640	1500	-	-	2500	SP07U320	20
STP600Y07(M)	347/600	420	-	-	840	1500	-	-	2500	SP07U420	10
STP690Y07(M)	400/690	550	-	-	1100	1500	-	-	2500	SP07U550	10

STP Series Pluggable

Surge-Trap®

Mersen — Expertise, our source of energy

40-030-002

DIMENSIONS - STP SERIES

poles	a	
	IN	MM
1 Pole	0.69	17.5
2 Pole	1.38	35
3 Pole	2.07	52.5
4 Pole	2.76	70

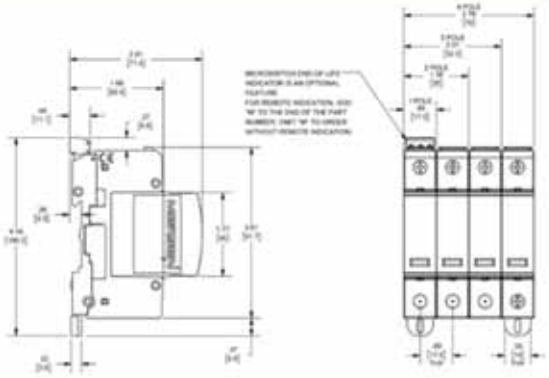

WIRING DIAGRAMS

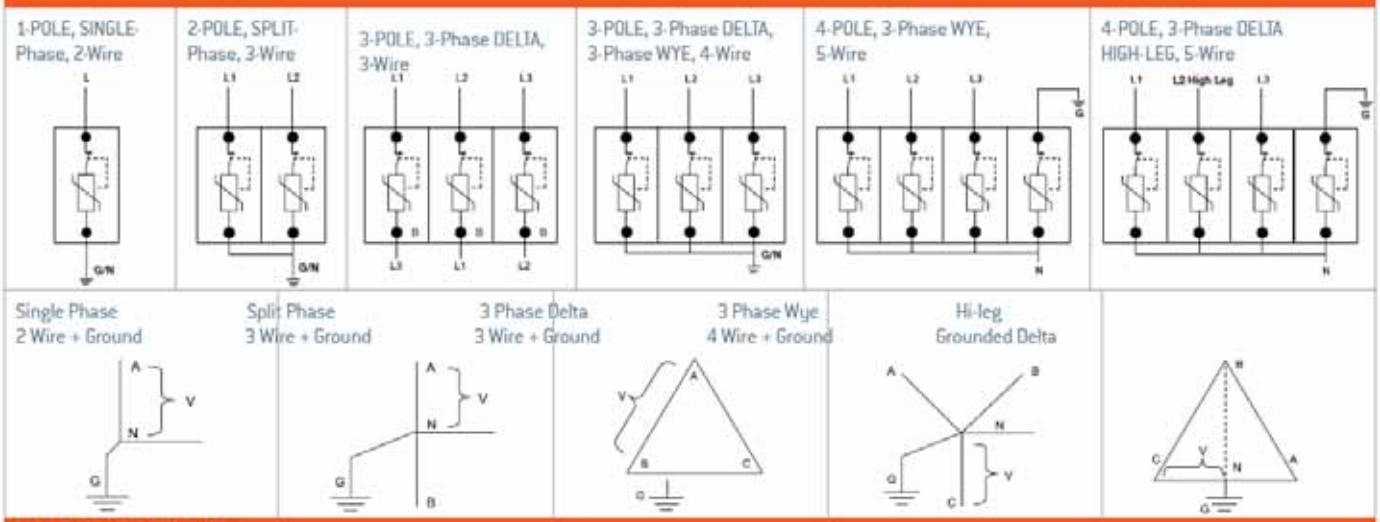

REMOTE STATUS INDICATOR

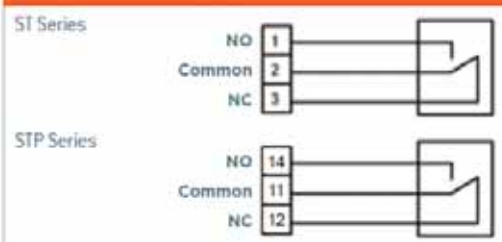

Signal Wire Range	#16 to #30 AWG
Terminal Torque	2.2 lb-in
Cont. between Comm + NO	Product Offline, Not Protected
Cont. between Comm + NC	Product Online, Protected
125 VAC - 3A max	

ST and STP Series: *for remote indication, add "M" to the end of the catalog number. For example, ST4803PYGM.*

ELEMECH INC. 630-499-7080 · www.elemechinc.com	Rev: 0	Device Tag: SUR1	
	Date: 8/20/2019		
Manuf.: . PNo: Mersen: STP120P07	By: MBS	Job Number: EVC7837	Page # 2/2

FL SWITCH SFN…24VAC

Five- and Eight-Port Standard Function Ethernet Switch with Narrow Housings for 24 V AC Power

33-098-002

Industrial Ethernet Switch - FL SWITCH SFN 5TX - 2891152

Technical data

Ambient conditions

Ambient temperature (storage/transport)	-20 °C ... 70 °C
Permissible humidity (operation)	5 % ... 95 % (non-condensing)
Permissible humidity (storage/transport)	5 % ... 95 % (non-condensing)
Air pressure (operation)	86 kPa ... 5 kPa (up to 1500 m above mean sea level)
Air pressure (storage/transport)	66 kPa ... 108 kPa (up to 3500 m above mean sea level)

Interfaces

Interface 1	Ethernet (RJ45)
No. of ports	5 (RJ45 ports)
Connection method	RJ45
Note on connection method	Auto negotiation and autocrossing
Transmission physics	Ethernet in RJ45 twisted pair
Transmission speed	10/100 MBit/s

Function

Basic functions	Unmanaged switch / auto negotiation, complies with IEEE 802.3, store and forward switching mode
Status and diagnostic indicators	LEDs: U_S, link and activity per port

Network expansion parameters

Cascading depth	Network, linear, and star structure: any
Maximum conductor length (twisted pair)	100 m

Supply voltage

Supply voltage	24 V DC
Residual ripple	3.6 V_{PP} (within the permitted voltage range)
Supply voltage range	9 V DC ... 32 V DC
Typical current consumption	90 mA (at U_S = 24 V DC)
Max. current consumption	205 mA (at 9 V DC)

General

Mounting type	DIN rail
Type AX	Block design
Net weight	416.1 g
Housing material	Aluminum

Standards and Regulations

Electromagnetic compatibility	Conformance with EMC Directive 2004/108/EC
Developed in acc. with standard	IEC 61000-6.2
Test standard	IEC 61000-4-2 (ESD)
Test result	Criterion B

ELEMECH INC. 630-499-7080 · www.elemechinc.com	Rev: 0	Device Tag: SW1	
	Date: 8/20/2019		
Manuf.: . PNo: Phoenix: 2891152	By: MBS	Job Number: EVC7837	Page # 1/1

General-Purpose Encapsulated Transformers

EATON
Powering Business Worldwide

41-018-A040

Standards and Certifications

- UL listed
- CSA certified

Listed

Enclosures

Eaton encapsulated transformers, Types EP and EPT, use a NEMA 3R rated enclosure as standard.

120 x 240 Volts to 120/240 Volts ①

kVA	Full Capacity Taps FCAN	FCBN	Type	°C Temp. Rise	Frame	Wiring Diagram Number	Weight Lbs (kg)	Weathershield	Style Number
0.5	—	—	EP	115	FR57P	3E	16 (7)	Indoor–Outdoor	**S10N11P51P**
1	—	—	EP	115	FR67P	3E	31 (14)	Indoor–Outdoor	**S10N11P01P**
1.5	—	—	EP	115	FR67P	3E	42 (19)	Indoor–Outdoor	**S10N11P16P**
2	—	—	EP	115	FR68P	3E	42 (19)	Indoor–Outdoor	**S10N11P02P**
3	—	—	EP	115	FR176	3E	55 (25)	Indoor–Outdoor	**S10N11S03N**
5	—	—	EP	115	FR177	3E	113 (51)	Indoor–Outdoor	**S10N11S05N**
7.5	—	—	EP	115	FR178	3E	123 (56)	Indoor–Outdoor	**S10N11S07N**
10	—	—	EP	115	FR179	3E	193 (88)	Indoor–Outdoor	**S10N11S10N**
15	—	—	EP	115	FR180	3E	216 (98)	Indoor–Outdoor	**S10N11S15N**
25	—	—	EP	115	FR182	3E	375 (170)	Indoor–Outdoor	**S10N11S25N**

240 x 480 Volts to 120/240 Volts Stainless Steel ②

kVA	Full Capacity Taps FCAN	FCBN	Type	°C Temp. Rise	Frame	Wiring Diagram Number	Weight Lbs (kg)	Weathershield	Style Number
3	—	—	EP	115	FR176	3A	65 (30)	Indoor–Outdoor	**S20N11S03SS**
5	—	—	EP	115	FR177	3A	113 (51)	Indoor–Outdoor	**S20N11S05SS**
7.5	—	—	EP	115	FR178	3A	123 (56)	Indoor–Outdoor	**S20N11S07SS**
10	—	—	EP	115	FR179	3A	193 (88)	Indoor–Outdoor	**S20N11S10SS**
15	—	—	EP	115	FR180	3A	205 (93)	Indoor–Outdoor	**S20N11S15SS**
25	—	—	EP	115	FR182	3A	375 (170)	Indoor–Outdoor	**S20N11S25SS**

208 Volts to 120/240 Volts ③

kVA	Full Capacity Taps FCAN	FCBN	Type	°C Temp. Rise	Frame	Wiring Diagram Number	Weight Lbs (kg)	Weathershield	Style Number
0.5	—	—	EP	115	FR57P	26A	16 (7)	Indoor–Outdoor	**S29N11P51P**
1	—	—	EP	115	FR67P	26A	31 (14)	Indoor–Outdoor	**S29N11P01P**
1.5	—	—	EP	115	FR67P	26A	42 (19)	Indoor–Outdoor	**S29N11P16P**
2	—	—	EP	115	FR68P	26A	42 (19)	Indoor–Outdoor	**S29N11P02P**
3	—	—	EP	115	FR176	26A	65 (30)	Indoor–Outdoor	**S29N11S03N**
5	—	—	EP	115	FR177	26A	113 (51)	Indoor–Outdoor	**S29N11S05N**
7.5	—	—	EP	115	FR178	26A	123 (56)	Indoor–Outdoor	**S29N11S07N**
10	—	—	EP	115	FR179	26A	193 (88)	Indoor–Outdoor	**S29N11S10N**
15	—	—	EP	115	FR180	26A	216 (98)	Indoor–Outdoor	**S29N11S15N**
25	—	—	EP	115	FR182	26A	395 (179)	Indoor–Outdoor	**S29N11S25N**

Notes

For 304 grade stainless steel enclosure, replace 10th character of catalog number with an "SS" suffix, e.g., P48G11S03SS
For 316 grade stainless steel enclosure, replace 10th character of catalog number with an "S6" suffix, e.g., P48G11S03S6.
For other ratings or catalog numbers not shown, or for special enclosure types (including stainless steel), refer to Eaton. Frame drawings/dimensions information begins on **Page V2-T2-215**.

EATON
Powering Business Worldwide

240 x 480 Volts to 120/240 Volts

kVA	Full Capacity Taps FCAN	FCBN	Type	°C Temp. Rise	Frame	Wiring Diagram Number	Weight Lbs (kg)	Weathershield	Style Number
0.050	—	—	EP	115	FR52	3A	7 (3)	Indoor–Outdoor	**S20N11S81N**
0.075	—	—	EP	115	FR54	3A	7 (3)	Indoor–Outdoor	**S20N11S85N**
0.100	—	—	EP	115	FR54	3A	7 (3)	Indoor–Outdoor	**S20N11S82N**
0.150	—	—	EP	115	FR55	3A	8 (4)	Indoor–Outdoor	**S20N11S83N**
0.25	—	—	EP	115	FR57P	3A	12 (5)	Indoor–Outdoor	**S20N11P26P**
0.5	—	—	EP	115	FR57P	3A	16 (7)	Indoor–Outdoor	**S20N11P51P**
0.75	—	—	EP	115	FR58AP	3A	26 (12)	Indoor–Outdoor	**S20N11P76P**
1	—	—	EP	115	FR67P	3A	31 (14)	Indoor–Outdoor	**S20N11P01P**
1.5	—	—	EP	115	FR67P	3A	42 (19)	Indoor–Outdoor	**S20N11P16P**
2	—	—	EP	115	FR68P	3A	42 (19)	Indoor–Outdoor	**S20N11P02P**
3	—	—	EP	115	FR176	3A	65 (30)	Indoor–Outdoor	**S20N11S03N**
3	②	②	EP	115	FR176	3A	65 (30)	Indoor–Outdoor	**S20K11S03N**
5	—	—	EP	115	FR177	3A	113 (51)	Indoor–Outdoor	**S20N11S05N**
5	②	②	EP	115	FR177	9A	105 (48)	Indoor–Outdoor	**S20K11S05N**
7.5	—	—	EP	115	FR178	3A	105 (48)	Indoor–Outdoor	**S20N11S07N**
7.5	②	②	EP	115	FR178	9A	123 (56)	Indoor–Outdoor	**S20K11S07N**
10	—	—	EP	115	FR179	3A	193 (88)	Indoor–Outdoor	**S20N11S10N**
10	②	②	EP	115	FR179	9A	193 (88)	Indoor–Outdoor	**S20K11S10N**
15	—	—	EP	115	FR180	3A	216 (98)	Indoor–Outdoor	**S20N11S15N**
15	③	③	EP	115	FR180	23A	216 (98)	Indoor–Outdoor	**S20L11S15N**
25	—	—	EP	115	FR182	3A	385 (175)	Indoor–Outdoor	**S20N11S25N**
25	③	③	EP	115	FR182	23A	375 (170)	Indoor–Outdoor	**S20L11S25N**
37.5	③	③	EP	115	FR300A	248A	735 (334)	Indoor–Outdoor	**S20L11S37** ④

600 Volts to 120/240 Volts

kVA	Full Capacity Taps FCAN	FCBN	Type	°C Temp. Rise	Frame	Wiring Diagram Number	Weight Lbs (kg)	Weathershield	Style Number
0.5	—	2 at –5%	EP	115	FR57P	2I	16 (7)	Indoor–Outdoor	**S60G11P51P**
0.75	—	2 at –5%	EP	115	FR58AP	2I	26 (12)	Indoor–Outdoor	**S60G11P76P**
1	—	2 at –5%	EP	115	FR67P	2I	31 (14)	Indoor–Outdoor	**S60G11P01P**
1.5	—	2 at –5%	EP	115	FR67P	2I	42 (19)	Indoor–Outdoor	**S60G11P16P**
2	—	2 at –5%	EP	115	FR68P	2I	42 (19)	Indoor–Outdoor	**S60G11P02P**
3	—	2 at –5%	EP	115	FR176	2I	65 (30)	Indoor–Outdoor	**S60G11S03N**
5	—	2 at –5%	EP	115	FR177	2I	105 (48)	Indoor–Outdoor	**S60G11S05N**
7.5	—	2 at –5%	EP	115	FR178	2I	123 (56)	Indoor–Outdoor	**S60G11S07N**
10	—	2 at –5%	EP	115	FR179	2I	193 (88)	Indoor–Outdoor	**S60G11S10N**
15	—	4 at –2.5%	EP	115	FR180	527A	216 (98)	Indoor–Outdoor	**S60J11S15N**
25	—	4 at –2.5%	EP	115	FR182	527A	385 (175)	Indoor–Outdoor	**S60J11S25N**
25	2 at 2.5%	4 at –2.5%	EP	115	FR132	83B	395 (180)	Indoor–Outdoor	**S60M11S25N**

Notes

① Contact Eaton for availability of 0.05–0.25 kVA designs.
② 1 at +10% FCBN at 240 volts; 2 at +5% FCBN at 480 volts.
③ 2 at +5% FCBN at 240 volts; 4 at +2.5% FCBN at 480 volts.
④ Floor-mount only.

Contact your local Eaton sales office for CE Mark transformer requirements. For other ratings or styles not shown, or for special enclosure types (including stainless steel), refer to Eaton. Frame drawings/dimensions information begins on **Page V2-T2-213**.

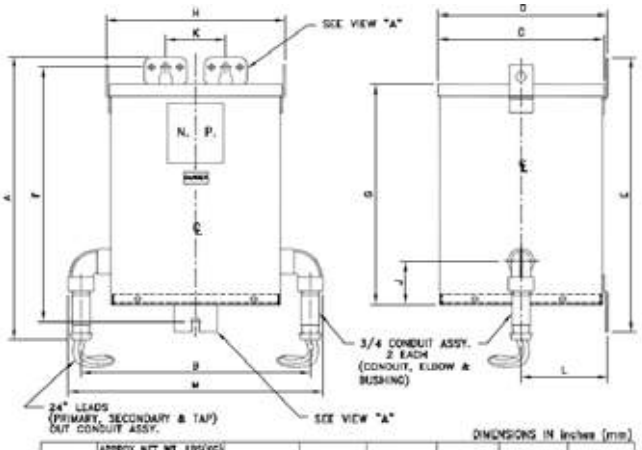

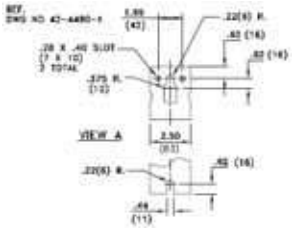

DIMENSIONS IN Inches (mm)

FRAME	APPROX NET WT. LBS(KG) ALUMINUM	COPPER	A	B	C	D	E	F
FR177H	113(51)	120(56)	16.53(420)	13.79(350)	9.67(246)	9.89(251)	16.15(410)	14.90(378)
			G	H	J	K	L	M
			12.83(326)	10.06(256)	2.50(64)	3.50(89)	5.06(129)	15.54(395)

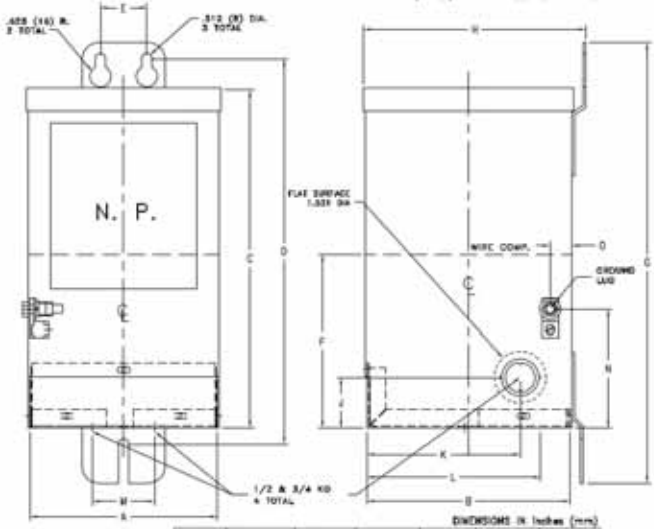

DIMENSIONS IN Inches (mm)

FRAME	A	B	C	D	E	F
FR177P	5.53(141)	6.00(152)	10.00(254)	11.40(251)	1.37(35)	5.12(130)
	G	H	J	K	L	M
	13.00(331)	6.56(167)	1.50(38)	4.52(115)	5.11(130)	1.85(47)
	N	O				
	3.50(89)	0.64(16)				

Rev1 = MAR/10

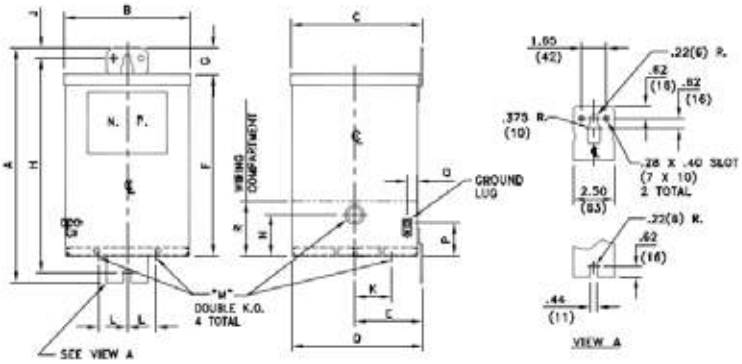

DIMENSIONS IN In(mm)

FRAME	APPROX NET WT LBS(KG) ALUMINUM	COPPER	A	B	C	D	E	F	G	H	J
FR176	65(30)	69(31)	14.25(362)	7.69(195)	8.00(203)	7.94(202)	4.09(103)	11.06(281)	1.63(41)	13.00(330)	.63(16)
				K	L	M	N	R	P	Q	
				2.25(57)	1.75(44)	.5, .75(13,19)	2.50(64)	3.32(84)	2.00(51)	.65(17)	

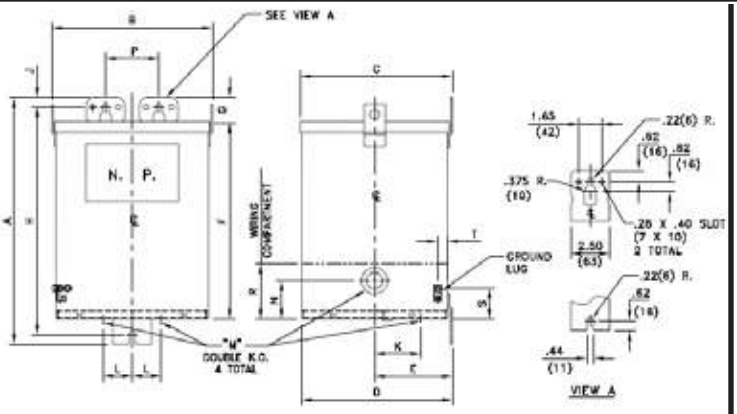

DIMENSIONS IN In(mm)

FRAME	APPROX NET WT LBS(KG) ALUMINUM	COPPER	A	B	C	D	E	F	G	H
FR176	123(55)	132(60)	16.00(405)	10.38(264)	9.69(251)	9.80(249)	5.09(129)	12.52(326)	1.63(41)	14.75(375)
			J	K	L	M	N	P	R	
			.63(16)	3.00(76)	1.88(48)	.75, 1.25(19, 32)	2.50(64)	3.46(88)	3.61(92)	
								S	T	
								2.00(51)	.65(17)	

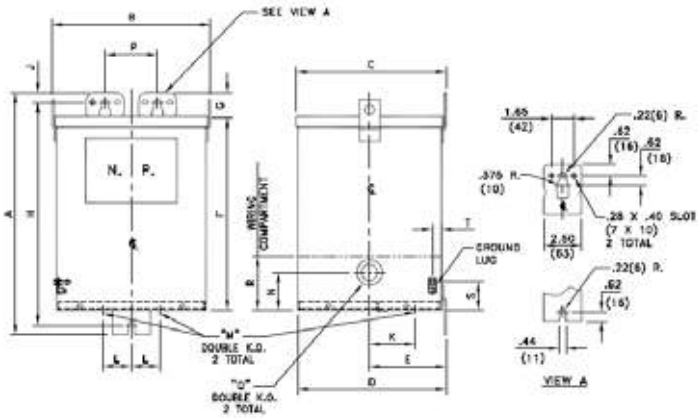

DIMENSIONS IN In(mm)

FRAME	APPROX. NET WT LBS(KG) ALUMINUM	COPPER	A	B	C	D	E	F	G	H	J
FR178	193(87)	222(101)	19.00(483)	13.38(340)	10.50(267)	10.46(266)	5.43(138)	15.85(402)	1.63(41)	17.75(451)	.63(16)
			K	L	M		N	P	Q		R
			3.38(86)	1.88(48)	.75, 1.25 (19, 32)		2.50(64)	3.46(88)	1.00, 1.50 (25, 38)		3.75(95)
										S	T
										2.00(51)	.65(17)

ELEMECH INC.
630-499-7080 · www.elemechinc.com

Rev: 0	Device Tag: T1		
Date: 8/20/2019			
By: MBS	Job Number: EVC7837	Page # 3/3	

Manuf.: . PNo:
Cutler-Hammer: S20N11P16PSS Assembly

41-018-A040

fasis

wieland

42-063-000

2,5 mm²/5 mm Width

Type		Part no.	Std. pack
Marking strips, unmarked			
9705 A/5/10		04.242.5053.0	25
Marking strips, marked			
9705 A/5/9 B	1 - 9	04.842.4953.0	25
9705 A/5/10 B*		04.842.5053.0	25
9705 A/5/10 B	1 - 10	04.845.0153.0	25
	11 - 20	04.845.0253.0	25
	21 - 30	04.845.0353.0	25
	31 - 40	04.845.0453.0	25
	41 - 50	04.845.0553.0	25
	51 - 60	04.845.0653.0	25
	61 - 70	04.845.0753.0	25
	71 - 80	04.845.0853.0	25
	81 - 90	04.845.0953.0	25
	91 - 100	04.845.1053.0	25
	⏚ (10 x)	04.855.0053.0	25
	⏚ (10 x)	04.855.0153.0	25
	+ (10 x)	04.855.0253.0	25
	– (10 x)	04.855.0353.0	25
	L1 (10 x)	04.855.0453.0	25
	L2 (10 x)	04.855.0553.0	25
	L3 (10 x)	04.855.0653.0	25
	PE (10 x)	04.855.0753.0	25
	SL (10 x)	04.855.3153.0	25
	N (10 x)	04.855.3253.0	25
	F1 (10 x)	04.855.0953.0	25
	F2 (10 x)	04.855.1053.0	25
L1, L2, L3, N, PE	(2 x)	04.855.0853.0	25
with enlarged marking area			
9705 AL/5/10		04.242.5153.0	25

*Custom marking upon request

4 mm²/6 mm Width

Type		Part no.	Std. pack
Marking strips, unmarked			
9705 A/6/10		04.242.6053.0	25
Marking strips, marked			
9705 A/6/9 B	1 - 9	04.842.5953.0	25
9705 A/6/10 B*		04.842.6053.0	25
9705 A/6/10 B	1 - 10	04.846.0153.0	25
	11 - 20	04.846.0253.0	25
	21 - 30	04.846.0353.0	25
	31 - 40	04.846.0453.0	25
	41 - 50	04.846.0553.0	25
	51 - 60	04.846.0653.0	25
	61 - 70	04.846.0753.0	25
	71 - 80	04.846.0853.0	25
	81 - 90	04.846.0953.0	25
	91 - 100	04.846.1053.0	25
	⏚ (10 x)	04.856.0053.0	25
	⏚ (10 x)	04.856.0153.0	25
	+ (10 x)	04.856.0253.0	25
	– (10 x)	04.856.0353.0	25
	L1 (10 x)	04.856.0453.0	25
	L2 (10 x)	04.856.0553.0	25
	L3 (10 x)	04.856.0653.0	25
	PE (10 x)	04.856.0753.0	25
	SL (10 x)	04.856.3153.0	25
	N (10 x)	04.856.3253.0	25
	F1 (10 x)	04.856.0953.0	25
	F2 (10 x)	04.856.1053.0	25
L1, L2, L3, N, PE	(2 x)	04.856.0853.0	25
with enlarged marking area			
9705 AL/6/10		04.242.6353.0	25

*Custom marking upon request

10 mm²/10 mm Width

Type	Part no.	Std. pack
marked for 5 blocks (every 2nd tag) *		
9705 A/5/10/5 B	04.842.5553.0	25

16 mm²/12 mm Width

Type	Part no.	Std. pack
marked for 5 blocks (every 2nd tag) *		
9705 A/6/10/5 B	04.842.6553.0	25

35 mm²/16 mm Width

Type	Part no.	Std. pack
marked for 5 blocks (every 2nd tag) *		
9705 A/8/10/5 B	04.842.8553.0	25

* indicate required marking with part no.

ELEMECH INC. 630-499-7080 · www.elemechinc.com	Rev: 0	Device Tag: TB,DB
	Date: 8/20/2019	
Manuf.: . PNo: Wieland: 04.242.6353-CUSTOM	By: MBS	Job Number: EVC7837
		Page # 1/1

Item No. Z5.522.8553.0

End bracket 9708 / 2 S 35

End clamp for mounting rail TS 35

wieland

42-063-009

Item No.	Z5.522.8553.0
EAN	4015573141766
order unit	100 Piece(s)

Technical data

Accessories

ArticlePrice	udp_no_price
Colour	Black
Inflammability class of insulation material acc. with UL94	V2
Width/grid dimension	8 mm
Latching	Screwable
Length	49 mm
Material	Metal
Mounting method	DIN rail (top hat rail) 35/7,5 mm

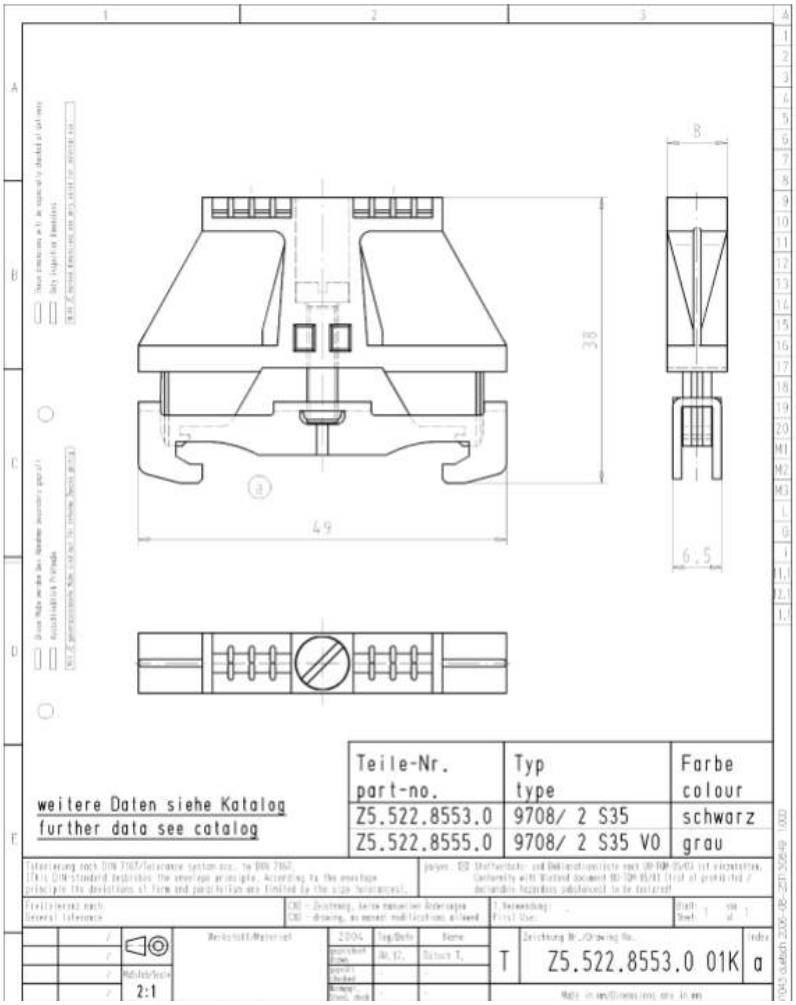

ELEMECH INC.
630-499-7080 · www.elemechinc.com

Rev: 0	Device Tag: TB,DB		
Date: 8/20/2019			
Manuf.: . PNo: Wieland: Z5.522.8553	By: MBS	Job Number: EVC7837	Page # 1/1

Item No. Z7.281.1227.0

Insulated jumper bar IVBWK 4 - 2

Cross connector, insulated for DIN rail terminal blocks type WK ..., 2 -pole

wieland

42-063-015

Item No.	Z7.281.1227.0
EAN	4015573156081
order unit	10 Piece(s)

Technical data

Accessories

ArticlePrice	
Colour	Yellow
Type	Cross connector
Modular spacing	5.95 mm
Number of bridged clamps	2
Mounting method	Screwable
Insulated	Yes

Type	Part no.	Std. pack
for terminal blocks type		
WK 2,5/U	**5 mm spacing Screw: M 2.5**	
WK 2,5 - 4 KOI/U		
WK 2,5 U/8113 S/H		
WKN 2,5 E/U		
2pole VB WK 2,5-2	Z7.280.0227.0	10
3pole VB WK 2,5-3	Z7.280.0327.0	10
4pole VB WK 2,5-4	Z7.280.0427.0	10
5pole VB WK 2,5-5	Z7.280.0527.0	10
6pole VB WK 2,5-6	Z7.280.0627.0	10
80pole VB WK 2,5 M-80	Z7.280.0027.0	10
WKM 2,5/15	**5 mm spacing Screw: M 2.5**	
WKM 2,5 F1/15		
WKM 2,5 F2/15		
WKM 2,5/2 S 2,8 1 K/15		
WKM 2,5 TP1 O/15		
WKM 2,5 TP2 O/15		
2pole VB WKM 2,5/15-2	Z7.215.4227.0	50
3pole VB WKM 2,5/15-3	Z7.215.4327.0	50
4pole VB WKM 2,5/15-4	Z7.215.4427.0	50
5pole VB WKM 2,5/15-5	Z7.215.4527.0	50
6pole VB WKM 2,5/15-6	Z7.215.4627.0	50
60pole VB WKM 2,5/15 M-60	Z7.215.4027.0	10
WK/3 S/IW/U	**6 mm spacing Screw: M 3**	
WK/3 - 6 S/IW/U		
WK/4 S/IW/U		
WK/4-8 S/IW/U		
2pole VB WK/...S/IW/U-2	Z7.281.3227.0	10
3pole VB WK/...S/IW/U-3	Z7.281.3327.0	10
4pole VB WK/...S/IW/U-4	Z7.281.3427.0	10
5pole VB WK/...S/IW/U-5	Z7.281.3527.0	10
6pole VB WK/...S/IW/U-6	Z7.281.3627.0	10
20pole VB WK/...S/IW/U-20	Z7.281.3027.0	10

Type	Part no.	Std. pack
WK 4/U	**6 mm spacing Screw: M 3**	
WK 4TKS D/U		
WK 4 3 S 1 K/U		
WK 4 3-6 S 1 K/U		
WK 4 5 S 2,8 1 K/U		
WK 4 3 S 1 K/IW/U		
WK 4 3-6 S 1 K/IW/U		
WK 4/U F1		
WK 4/U F2		
2pole VB WK 4-2	Z7.281.0227.0	10
3pole VB WK 4-3	Z7.281.0327.0	10
4pole VB WK 4-4	Z7.281.0427.0	10
5pole VB WK 4-5	Z7.281.0527.0	10
6pole VB WK 4-6	Z7.281.0627.0	10
70pole VB WK 4 M-70	Z7.281.0027.0	10
WK 4/D 1/2 U	**6 mm spacing Screw: M 3**	
WK 4/D 2/2 U		
2pole VB WK 4 D..-2	Z7.281.6227.0	10
3pole VB WK 4 D..-3	Z7.281.6327.0	10
4pole VB WK 4 D..-4	Z7.281.6427.0	10
5pole VB WK 4 D..-5	Z7.281.6527.0	10
6pole VB WK 4 D..-6	Z7.281.6627.0	10
70pole VB WK 4 D.. M-70	Z7.281.6027.0	10
WKM 4/15	**6 mm spacing Screw: M 3**	
WK 4/D EU		
WK 4 E/U for upper tier block		
WK 4 E/U GU ORANGE		
WK 4 E/U GO		
WK 4 E/U G2		
WK 4 E/U G1 ORANGE		
WK 4 E/U G-URL		
WK 4 E/U G-ULR		
WK 4 E/U VB SCHWARZ		
2pole 9215 - 2	Z7.210.3227.0	50
3pole 9215 - 3	Z7.210.3327.0	50
4pole 9215 - 4	Z7.210.3427.0	50
5pole 9215 - 5	Z7.210.3527.0	50
6pole 9215 - 6	Z7.210.3627.0	50
70pole 9215 M-70	Z7.210.3027.0	10

Type	Part no.	Std. pack
WK 4/3-6 SKO	**6 mm spacing Screw: M 3**	
2pole 2072/2	Z7.220.0227.0	50
3pole 2072/3	Z7.220.0327.0	50
4pole 2072/4	Z7.220.0427.0	50
5pole 2072/5	Z7.220.0527.0	50
6pole 2072/6	Z7.220.0627.0	50
70pole 2072/M	Z7.210.1027.0	10
WK/5 S/U	**6 mm spacing Screw: M 3**	
WK/5-10 S/U		
WK/3-6 S/U		
WK/4 S/U		
WK/4-8 S/U		
2pole 9703/6-2	Z7.211.0227.0	50
3pole 9703/6-3	Z7.211.0327.0	50
4pole 9703/6-4	Z7.211.0427.0	50
5pole 9703/6-5	Z7.211.0527.0	50
6pole 9703/6-6	Z7.211.0627.0	50
70pole 9703/6 M-70	Z7.211.0027.0	10

ELEMECH INC.

630-499-7080 · www.elemechinc.com

Manuf.: . PNo: Wieland: Z7.281.1227	Rev: 0	Device Tag: TB1	
	Date: 8/20/2019		
	By: MBS	Job Number: EVC7837	Page # 1/1

wieland

42-063-001

Datasheet

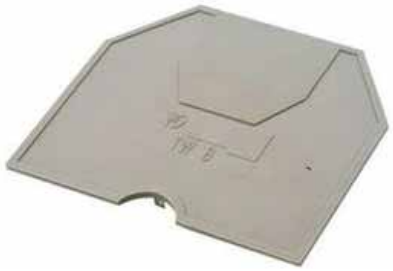

Art.No. 07.311.0155.0

End plate AP 2,5 -4 /V0

End plate for DIN rail terminal blocks type WK ..., color gray

Art.No.	07.311.0155.0
EAN	4015573392663
Order unit	10 pieces

Approvals

Technical data

General

Colour	Grey
Type of end plate	Yes
Type of partition	No
Thickness	1.5 mm
Snap in	Yes
Inflammability class of insulation material acc. with UL94	V0

Accessories

Type of end plate	Yes
Type of partition	No
Colour	Grey
Thickness	1.5 mm
Snap in	Yes
Inflammability class of insulation material acc. with UL94	V0

Feed-through blocks with screw connection

selos

wieland

42-063-003

UL wire connection versions

[1] or 2x no. 14 sol/str AWG
or 2x no. 16 sol/str AWG
or 2x no. 18 sol/str AWG
or 3x no. 20 sol/str AWG or 3x no. 22 sol/str AWG

[2] or 2x no. 12 sol/str AWG
or 2x no. 16 sol/str AWG
or 3x no. 18 sol/str AWG or 3x no. 22 sol/str AWG

[3] or 2x no. 12 sol/str AWG
or 2x no. 14 sol/str AWG
or 3x no. 16 sol/str AWG

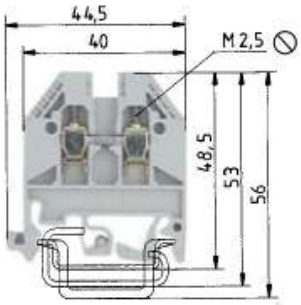

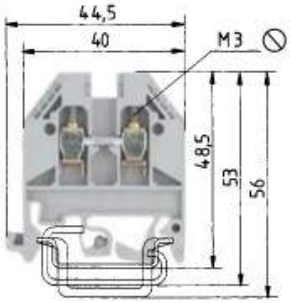

		WK 2,5/U				WK 4/U			
0344 Ex II 2GD IM2		fine-stranded	solid	V	A	fine-stranded	solid	V	A
Ex e I/II		0.5-2.5 mm²	0.5-4 mm²	800V/8 kV/3	24	0.5-4 mm²	0.5-6 mm²	800V/8 kV/3	32
EN 60947-7-1:2002									
UL ratings	Field/factory wiring	No. 22-12 AWG		600V	20/30	No. 22-10 AWG[4]		600V	30/35
CSA ratings		No. 24-12 AWG		600V	25	No. 20-10 AWG		600V	40
KEMA 02 ATEX 2114 U[1] EN 60079-0/EN 60079-7		0.5-2.5 mm²	0.5-4 mm²	690V	23	0.5-4 mm²	0.5-6 mm²	690V	14/27[3]
Width	Wire strip length	5 mm			9mm	6mm			9mm
Approvals									

		Type	Part No.	Std. Pack	Type	Part No.	Std. Pack
Feed-through block	gray	WK 2,5/U	57.503.0055.0	100	WK 4/U	57.504.0055.0	100
Feed-through block Ex i	blue	WK 2,5/U BLAU	57.503.0055.6	100	WK 4/U BLAU	57.504.0055.6	100
Accessories							
1. Mounting rail TS 35, DIN rail 7.5 mm high	L = 2 m	35 x 27 x 7,5 EN 60715	98.300.0000.0	1	35 x 27 x 7,5 EN 60715	98.300.0000.0	1
Mounting rail TS 35, DIN rail, 15 mm high	L = 2 m	35 x 24 x 15 EN 60715	98.360.0000.0	1	35 x 24 x 15 EN 60715	98.360.0000.0	1
Mounting rail TS 32, G rail[2]	L = 2 m	9006 EN 60715 G-32	98.190.0000.0	1	9006 EN 60715 G-32	98.190.0000.0	1
2. End clamp with U-foot[2]	10mm wide	WE 1/U	Z5.523.5753.0	100	WE 1/U	Z5.523.5753.0	100
End clamp TS 35, with screw	8mm wide	9708/2 S35	Z5.522.8553.0	100	9708/2 S35	Z5.522.8553.0	100
End clamp TS 35, without screw	8mm wide	WEF 1/35	Z5.523.9353.0	100	WEF 1/35	Z5.523.9353.0	100
3. End plate	gray	AP 2,5 - 4	07.311.0155.0	10	AP 2,5 - 4	07.311.0155.0	10
	blue	AP 2,5 - 4 BLAU	07.311.0155.6	10	AP 2,5 - 4 BLAU	07.311.0155.6	10
4. Partition	gray	TW 2,5 - 4	07.311.1155.0	10	TW 2,5 - 4	07.311.1155.0	10
	blue	TW 2,5 - 4 BLAU	07.311.1155.6	10	TW 2,5 - 4 BLAU	07.311.1155.6	10
5. Cross connector with screws	2 pole	IVB WK 2,5 - 2	Z7.280.2227.0	10	IVB WK 4 - 2	Z7.281.1227.0	10
insulated	3 pole	IVB WK 2,5 - 3	Z7.280.2327.0	10	IVB WK 4 - 3	Z7.281.1327.0	10
	up to 12 pole	IVB WK 2,5 - 12	Z7.280.3227.0	10	IVB WK 4 - 12	Z7.281.2227.0	10
6. Partition plate with marking facility		TS 2,5 GELB	07.311.2053.8	10	TS 4 GELB	07.311.2153.8	10
7. Single cover with marking facility		AD VB 2,5 GELB	04.326.2053.8	10	AD VB 4 GELB	04.326.2153.8	10
8. Cover with warning symbol over 4 blocks		AD VB 5/4 GELB	04.343.4756.8	10	AD VB 6/4 GELB	04.343.4856.8	10

For more accessories see pages 60-77
For marking systems see pages 70-75

[1] For maintaining the proper isolation distances, the open side of a feed-through terminal block as well as both sides of a jumper are to be enclosed by partitions.
[1] Please note the mounting instructions on the cover page.
[2] Do not use in Ex environments.
[3] With/without jumper

ELEMECH INC.
630-499-7080 · www.elemechinc.com

Rev: 0	Device Tag: TB1-3		
Date: 8/20/2019			
Manuf.: . PNo: Wieland: 57.504.0055.0	By: MBS	Job Number: EVC7837	Page # 1/1

SMALL COMPACT THERMOSTAT

KTO 011 / KTS 011

46-034-000

Technical Data KT 011

Part No.	Contact type	Scale on housing
01140.9-00	normally closed	30 - 140°F
01141.9-00	normally open	30 - 140°F
01146.9-00	normally closed	0 - 60°C
01147.9-00	normally open	0 - 60°C

Sensor element:	Thermostatic bi-metal
Maximum tolerance:	±7.2°F (4K)
Switching difference (hysteresis):	12.6°F ± 5.4°F (7°C ± 3K)
Service life:	100,000 cycles
Switching capacity (max. load):	15A resistive/2A inductive @ 120 VAC
	10A resistive/2A inductive @ 250 VAC
	DC 30W
EMI/EMC compliance:	EN 55014-1-2, EN 61000-3-2, EN 61000-3-3
Connections:	2-pole terminal for AWG 14 max. (2.5 mm²)
Mounting:	Clip for 35 mm DIN rail (EN 50022)
Dimensions (H x W x D):	2.4 x 1.3 x 1.7" (60 x 33 x 43 mm)
Housing:	Plastic, UL94V-0
Weight:	1.27 oz (36 g)
Protection type:	IP 20
Operating/storage temperature:	-49 to 158°F (-45 to 70°C)
Agency approvals:	UL, CSA

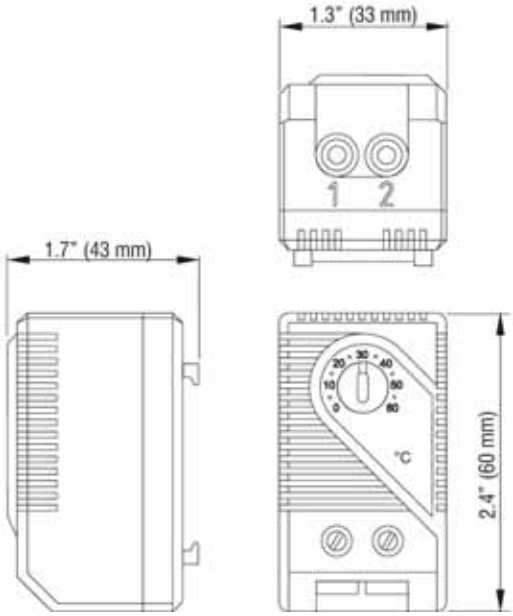

ELEMECH INC. 630-499-7080 · www.elemechinc.com	Rev: 0	Device Tag: TS1	
	Date: 8/20/2019		
Manuf.: . PNo: Stego: 01140.9-00	By: MBS	Job Number: EVC7837	Page # 1/1

Bulletin 855P Panel Mount Alarms
Signaling Solutions…Loud and Clear

Allen-Bradley
Rockwell Automation

01-005-005

www.rockwellautomation.com

Advantages

- Mount in a standard 22.5 mm or 30 mm hole (with adapter ring)
- UL Type 4/4X/13, IP65 rated
- Sound output range from 80 dB to 105 dB @ 1 meter
- Selectable continuous or pulsing sounders and flashing or steady LED available
- Panel mount strobe light version available
- Combination sounder and LED products available to reduce your panel space
- Adjustable volume (ME and LE units)
- 12V AC/DC, 24V AC/DC, 120V AC, and 240V AC available
- Plug-in Terminal Block - IP2X Rated
- Rear securing eliminates unauthorized product removal
- cULus listed and CE Marked

Copyright © 2003 Rockwell Automation, Inc. All rights reserved.

c UL us LISTED

855P - B ___ ___ ___

a b c d

b

	Voltage
Code	Description
30	12...24V AC/DC
10	120V AC
20	240V AC

c

	Size
Code	Description
SE	30 mm
ME	45 mm
LE	65 mm

d

	Mounting Hole
Code	Description
22	22.5 mm

30 mm Panel Mount Sounder

45 mm Panel Mount Sounder

65 mm Panel Mount Sounder

ELEMECH INC. 630-499-7080 · www.elemechinc.com	Rev: 0	Device Tag: AH	
	Date: 8/20/2019		
Manuf.: . PNo: Allen-Bradley: 855P-B10ME22	By: MBS	Job Number: EVC7837	Page # 1/1

CHNF SERIES CONTINUOUS HINGE WITH CLAMPS TYPE 4X JUNCTION BOXES

PENTAIR

11-035-009

ENCLOSURE CATALOG NUMBER	ENCLOSURE DIMENSIONS (IN.)	SUB-PANEL CATALOG NUMBER
A-ABCCHNFSS6	A x B x C	A APB

NOTE:

1. SS - INDICATES 304 STAINLESS STEEL
2. 6 – INDICATES 316 STAINLESS STEEL

APPLICATION

Used in either indoor or outdoor applications, these enclosures combine a rugged continuous hinge, seamless foam-in-place gasket and stainless steel screw-down clamps for a reliable seal that protects components from corrosive environments.

SPECIFICATIONS

- 16 and 14 gauge Type 304 or 316L stainless steel
- Seams continuously welded and ground smooth
- Seamless foam-in-place gasket
- Stainless steel screws and clamps
- Pull stainless steel continuous hinge pin to remove door
- Weldnuts provided for mounting optional panels and terminal block kits
- Bonding provision on door and body

FINISH

Cover and sides of body have smooth #4 brushed finish.

ACCESSORIES

Fast-Operating Clamp-Cover Junction Box Clamp
Lock Kit for Clamp Cover Junction Boxes
Panels for Junction Boxes
Terminal Block Kit Assembly for Junction Boxes Overview

MODIFICATION AND CUSTOMIZATION

Hoffman excels at modifying and customizing products to your specifications. Contact your local Hoffman sales office or distributor for complete information.

INDUSTRY STANDARDS

UL 50, 50E Listed; Type 3R, 4, 4X, 12; File No. E27567
cUL Listed per CSA C22.2 No 94; Type 3R, 4, 4X, 12; File No. E27567
UL 508A Listed; Type 3R, 4, 4X, 12; File No. E61997
cUL Listed per CSA C22.2 No 94; Type 3R, 4, 4X, 12; File No. E61997

NEMA/EEMAC Type 3R, 4, 4X, 12, 13
CSA File No. 42184: Type 4, 4X, 12
IEC 60529, IP66
Meets NEMA Type 3RX requirements

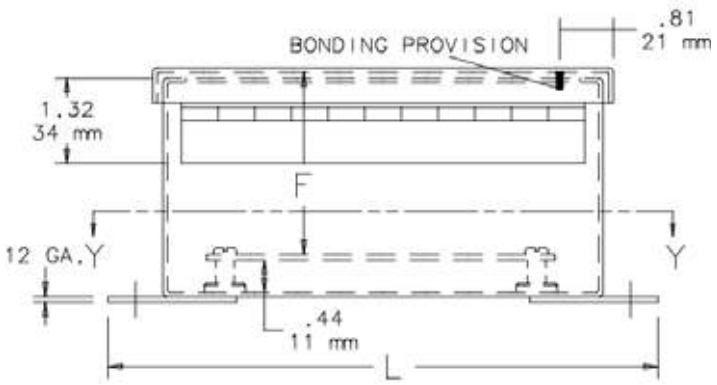

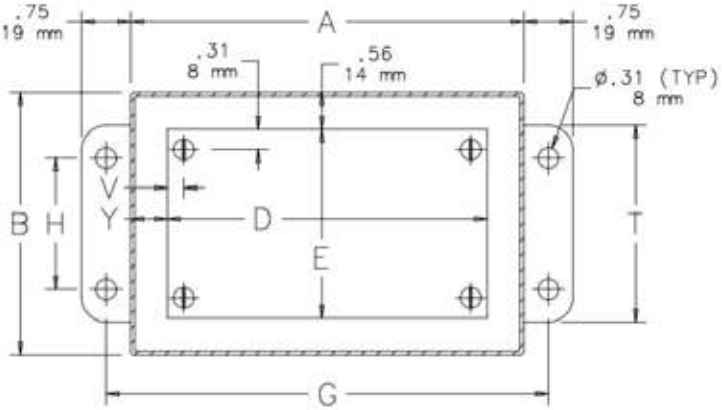

ELEMECH INC. 630-499-7080 · www.elemechinc.com	Rev: 0	Device Tag: EN	
	Date: 8/20/2019		
Manuf.: . PNo: Hoffman: A-1008CHNFSS	By: MBS	Job Number: EVC7837	Page # 1/1

Replacement Color Caps

Allen-Bradley

30.5 mm Accessories

32-005-042

Color	800T/H Pilot Light Color Caps		
	Standard*	Push-to-Test*	18 mm
	Cat. No.	Cat. No.	Cat. No.
Amber	**800T-N26A**	**800T-N42**	**800T-N122A**
Blue	**800T-N26B**	**800T-N43**	**800T-N122B**
Clear	**800T-N26C**	**800T-N45**	800T-N122C
Green	**800T-N26G**	**800T-N41**	**800T-N122G**
Red	**800T-N26R**	**800T-N40**	**800T-N122R**
White	**800T-N26W**	**800T-N44**	**800T-N122W**

30.5 mm Push Buttons

Pilot Lights

Allen-Bradley

32-005-048

800	T		– P	T		16	G
	a	b	c	d	e	f	g

a

Protection Rating	
Code	Description
T	Metal, Type 4/13
H	Plastic, Type 4/4X/13

c

Power Module Type		
800T Type 4/13	Description	800H Type 4/4X/13
Code		Code
P	Transformer (or dual input)	PR
Q	Full voltage/ Universal	QR

d

Lamp Test Options	
Code	Description
Blank	No test option
T	Push-to-test
D	Dual input — diode▲
DT	Dual input — transformer relay
Note: Push-to-test supplied with factory jumpered contact block.	

e

Illumination Options	
Code	Description
Blank	Incandescent
H	LED+

f

Voltage	
Transformer	
Code	Description
16	120V AC 50/60 Hz
26	240V AC 50/60 Hz
46	480V AC 50/60 Hz
56	600V AC 50/60 Hz
Full Voltage — Incandescent	
12	12V AC/DC
24	24V AC/DC
48	48V AC/DC
10	120V AC/DC
20	240V AC/DC
Universal — LED	
2	12…130V AC/DC
Dual Input	
16	120V AC
24	24V AC/DC (Dual input diode only)

g

Lens Color		
Code	Color	Glass Code ▲
Blank	No lens	Blank
A	Amber	D
B	Blue	E
C	Clear	F
G	Green	H
R	Red	J
W	White	K

Specifications+

Electrical Ratings		
Contact ratings		Refer to the contact ratings tables on page 10-4.
Dielectric strength		2200V for one minute, 1300V for one minute (Logic Reed)
Electrical design life cycles		1 000 000 at max. rated load, 200 000 at max. rated load (Logic Reed)
Mechanical Ratings		
Vibration		10…2000 Hz, 1.52 mm displacement (peak-to-peak) max./ 10 G max. (except Logic Reed)
Shock		1/2 cycle sine wave for 11 ms ≥ 25 G (contact fragility) and no damage at 100 G
Degree of protection		Type 1/4/12/13 (800T); Type 1/4/4X/12/13 (800H); EN/IEC 60529 IP66/65
Mechanical design life cycles		
Push buttons	(Momentary, non-illuminated)	10 000 000 min.
	(Momentary, illuminated)	250 000 min.
	(Push-pull/twist-to-release)	250 000 min.
Selector switches	(Non-illuminated)	1 000 000 min.
	(Illuminated, key-operated)	200 000 min.
Potentiometers		25 000 min.
All other devices		200 000 min.
Contact operation		Shallow, mini, and low-voltage contact blocks: Slow, double make and break Logic Reed and sealed switch contact blocks: Single break magnetic
Wire gauge/Terminal screw torque		#18…14 AWG (#18…10 Max Duty) / 6…8 lb•in
Typical operating forces Operators without contact blocks		Flush, extended button, standard mushroom, jumbo plastic mushroom: 2 lbs max. Jumbo and extended aluminum mushroom head: 3.95 lbs max. Maintained selector switch: 3.6 in•lb max.
Spring return selector switches		3.6 in•lb to stop, 0.2 in•lb to return
Illuminated push buttons and push-to-test pilot lights		5 lb max.
2-position push-pull		8.0 lb max. push or pull
3-position push-pull		8 lb max. push to in position or pull to center position (15 lb max. pull to out position)
Twist-to-release or push-pull		9 lbs max. push or pull 30 in•oz max. twist, 6 in•oz minimum return
Potentiometer		Rotational torque 3…12 in•oz; stopping torque 12 in•lb (minimum)
Contact blocks	Standard	1 lb
	Logic Reed	1 lb max.
	Sealed switch	3 lb max. at 0.205 in. plunger travel
	Stackable sealed switch	1 lb max.
	MaxDuty	1.4 lb max.
	PenTUFF	1.4 lb max.
	Self Monitoring	1.6 lb
Environment		
Temperature range	Operating	-40…+131 °F (-40…+55 °C)
	Storage	-40…+185 °F (-40…+85 °C)
Note: Operating temperatures below freezing are based on the absence of moisture and liquids. Consult your local Rockwell Automation sales office or Allen-Bradley distributor for use in lower temperature applications.		
Humidity		50…95% RH from 77…140 °F (25…60 °C) per Procedure IV of MIL-STD-810C, Method 507.1 cycling test

ELEMECH INC. 630-499-7080 · www.elemechinc.com	Rev: 0	Device Tag: LT	
	Date: 8/20/2019		
Manuf.: . PNo: Allen-Bradley: 800H-PR16	By: MBS	Job Number: EVC7837	Page # 1/1

Product Catalog Information

Customer:

Enviro-Care

Job Name:

Frederick Winchester, VA

Beast Inlet and Outlet Pump Control Panel

Arranged By:

EleMech, Inc.
2275 White Oak Circle
Aurora, IL, 60502

Project Engineer:

Matt Stone

Date:

08/20/19

This page intentionally left blank

Catalog Cuts

D

5SJ4 1 10 – 7 HG41
a b c d e

SIEMENS

a	Frame Style	
	Code	Description
	5SJ4	Standard Frame

b	Poles	
	Code	Description
	1	1-Pole
	2	2-Pole
	3	3-Pole

c	Rated Current	
	Code	Rated Current (I_n)
	14	0.3
	05	0.5
	01	1
	15	1.6
	02	2
	03	3
	04	4
	11	5
	06	6
	08	8
	10	10
	13	13
	18	15
	16	16
	20	20
	25	25
	30	30
	32	32
	35	35
	40	40
	45	45
	50	50
	60	60
	63	63

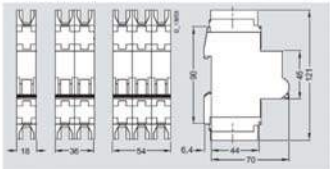

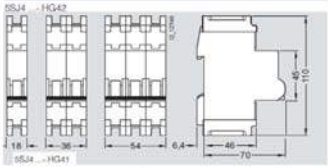

d	Trip Curve (Characteristic)			
	Code	Trip Curve	Magnetic Trip Point	Thermal Trip Point
	6	B	3 to 5 I_n	1.13 to 1.45 Breaker Rating
	7	C	5 to 10 I_n	
	8	D	10 to 20 I_n	

e	Version	
	Code	Description
	HG40	240 VAC, Same Polarity
	HG41	240 VAC
	HG42	480Y/277 VAC

Certifications:
CE
UL Listed and Certified to Canadian Standards
HACR Rated

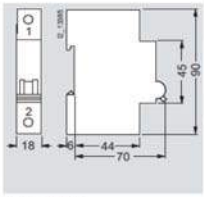

ELEMECH INC.
630-499-7080 · www.elemechinc.com

Manuf. PNo: SIEMENS: 5SJ4102-7HG40

Rev: 0
Date: MM/DD/YYY
By: Engineer Initials

Device Tag: CB5
Job Number: ELE5000
Page # 1/1

03-056-035

EleMech Part Number
Refer to Bill of Materials
for more information

03-056-***

A '***' Suffix indicates
this information is for
multiple devices.

Refer to
Electrical Drawings

Manufacturer: Model Number

Refrence
Job #

ELEMECH INC. 630-499-7080 · www.elemechinc.com	Rev: 0	Section: D	
	Date: 8/20/2019		
Section Name: Catalog Cuts	By: MBS	Job Number: EVC7838	Page # 1/1

C1.5WH6

PANDUIT

10-069-000

- **Base and covers sold separately**
- Non-slip cover design incorporates integral high friction lining to inhibit cover movement
- Cover flush with base provides greater wire capacity and improves aesthetics
- Easy cover removal makes changes to wiring quick and easy
- Available in various colors

Part Number	C1.5WH6
RoHS Compliancy Status	Compliant
Part Description	Covers duct to protect w ires, improve aesthetics and provides greater w ire capacity. Base and covers sold separately.
Product Type	Type C Cover for Flush Cover Wiring Duct
Material	Lead-Free PVC
Color	White
Length (ft.)	6
Length (m)	1.82
CE Compliant	Yes
Pricing Description	Duct Cover, PVC, 1.5"W X 6', White

C1WH6

PANDUIT

10-069-001

- **Base and covers sold separately**
- Non-slip cover design incorporates integral high friction lining to inhibit cover movement
- Cover flush with base provides greater wire capacity and improves aesthetics
- Easy cover removal makes changes to wiring quick and easy
- Available in various colors

Part Number	C1WH6
RoHS Compliancy Status	Compliant
Part Description	Covers duct to protect w ires, improve aesthetics and provides greater w ire capacity. Base and covers sold separately.
Product Type	Type C Cover for Flush Cover Wiring Duct
Material	Lead-Free PVC
Color	White
Length (ft.)	6
Length (m)	1.82
CE Compliant	Yes
Pricing Description	Duct Cover, PVC, 1"W X 6', White

Panduit Wiring Duct Approvals and Compliances

F1.5X3WH6

PANDUIT

10-069-005

Specifications

- Made of lead-free PVC
- UL Recognized continuous use temperature: 122°F (50°C)
- UL94 Flammability Rating of V-0
- Conforms with NFPA 79-2002 section 14.3.1 requirement for flame retardant material
- Available in Light Gray and White
- Provided with mounting holes

Part Number	F1.5X3WH6
RoHS Compliancy Status	Compliant
Part Description	Narrow finger, slotted wiring duct.
Material	Lead–Free PVC
Color	White
CSA Certified	Yes
Length (ft.)	6
CE Compliant	Yes
CE Marking	Yes
Duct Size W x H (In.)	1.75 x 3.12
Duct Size W x H (mm)	44.5 x 79.2
Mounting Method	Standard Mounting Holes
Pricing Description	Slotted Duct,PVC,1.5"X3"X6',White

F1X3WH6

PANDUIT

10-069-007

Specifications

- Made of lead-free PVC
- UL Recognized continuous use temperature: 122°F (50°C)
- UL94 Flammability Rating of V-0
- Conforms with NFPA 79-2002 section 14.3.1 requirement for flame retardant material
- Available in Light Gray and White
- Provided with mounting holes

Part Number	F1X3WH6
RoHS Compliancy Status	Compliant
Part Description	Narrow finger, slotted wiring duct.
Material	Lead–Free PVC
Color	White
CSA Certified	Yes
Length (ft.)	6
CE Compliant	Yes
CE Marking	Yes
Duct Size W x H (In.)	1.26 x 3.12
Duct Size W x H (mm)	32.0 x 79.2
Mounting Method	Standard Mounting Holes
Pricing Description	Slotted Duct,PVC,1"X3"X6',White

Panduit Wiring Duct Approvals and Compliances

F2X3WH6

PANDUIT

10-069-008

Specifications

- Made of lead-free PVC
- UL Recognized continuous use temperature: 122°F (50°C)
- UL94 Flammability Rating of V-0
- Conforms with NFPA 79-2002 section 14.3.1 requirement for flame retardant material
- Available in Light Gray and White
- Provided with mounting holes

Part Number	F2X3WH6
RoHS Compliancy Status	Compliant
Part Description	Narrow finger, slotted wiring duct.
Material	Lead–Free PVC
Color	White
CSA Certified	Yes
Length (ft.)	6
CE Marking	Yes
Duct Size W x H (In.)	2.25 x 3.12
Duct Size W x H (mm)	57.2 x 79.2
Mounting Method	Standard Mounting Holes
Pricing Description	Slotted Duct,PVC,2"X3"X6',White
Slot Width (In.)	0.20
Slot Width (mm)	5.0

Panduct® Type F Narrow Slot Wiring Duct

PANDUIT

10-069-01

- Narrow slot/finger design provides more slots to fit the spacing of high-density terminal blocks and other hardware
- Material: Lead-free PVC
- UL recognized continuous use temperature: 122°F (50°C)
- UL 94 flammability rating of V-0
- Conforms with NFPA 79-2007 section 13.3.1 requirement for flame retardant material
- Provided with mounting holes
- Base and cover length is 6 feet

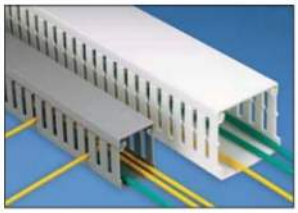

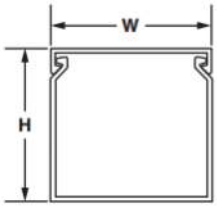

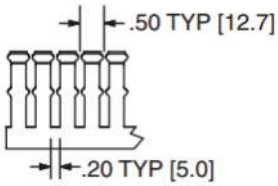

Base Part Number	Duct Size (W x H)*		Slot Width		Cover Part Number	Std. Pkg. Qty.	Base Ctn. Qty.	Cover Ctn. Qty.
	In.	mm	In.	mm				
F.5X.5LG6	0.69 x 0.60	17.5 x 15.2	0.20	5.0	C.5LG6	6	120	120
F.5X1LG6	0.69 x 1.06	17.5 x 26.9	0.20	5.0	C.5LG6	6	120	120
F.75X.75LG6	0.93 x 0.82	23.6 x 20.9	0.20	5.0	C.75LG6	6	120	120
F.75X1.5LG6	0.93 x 1.57	23.6 x 39.9	0.20	5.0	C.75LG6	6	120	120
F1X1LG6	1.26 x 1.13	32.0 x 28.7	0.20	5.0	C1LG6	6	120	120
F1X1.5LG6	1.26 x 1.62	32.0 x 41.1	0.20	5.0	C1LG6	6	120	120
F1X2LG6	1.26 x 2.12	32.0 x 53.8	0.20	5.0	C1LG6	6	120	120
F1X3LG6	1.26 x 3.12	32.0 x 79.2	0.20	5.0	C1LG6	6	120	120
F1X4LG6	1.26 x 4.10	32.0 x 104.1	0.20	5.0	C1LG6	6	60	120
F1.5X1LG6	1.75 x 1.12	44.5 x 28.4	0.20	5.0	C1.5LG6	6	120	120
F1.5X1.5LG6	1.75 x 1.62	44.5 x 41.1	0.20	5.0	C1.5LG6	6	120	120
F1.5X2LG6	1.75 x 2.12	44.5 x 53.8	0.20	5.0	C1.5LG6	6	120	120
F1.5X3LG6	1.75 x 3.12	44.5 x 79.2	0.20	5.0	C1.5LG6	6	120	120
F1.5X4LG6	1.75 x 4.10	44.5 x 104.1	0.20	5.0	C1.5LG6	6	60	120
F2X1LG6	2.25 x 1.12	57.2 x 28.4	0.20	5.0	C2LG6	6	120	120
F2X1.5LG6	2.25 x 1.62	57.2 x 41.1	0.20	5.0	C2LG6	6	120	120
F2X2LG6	2.25 x 2.12	57.2 x 53.8	0.20	5.0	C2LG6	6	120	120
F2X3LG6	2.25 x 3.12	57.2 x 79.2	0.20	5.0	C2LG6	6	60	120
F2X4LG6	2.25 x 4.10	57.2 x 104.1	0.20	5.0	C2LG6	6	60	120
F2X5LG6	2.25 x 5.10	57.2 x 129.5	0.20	5.0	C2LG6	6	60	120
F2.5X3LG6	2.75 x 3.12	69.9 x 79.2	0.20	5.0	C2.5LG6	6	120	120
F3X1LG6	3.25 x 1.12	82.6 x 28.4	0.20	5.0	C3LG6	6	120	120
F3X2LG6	3.25 x 2.12	82.6 x 53.8	0.20	5.0	C3LG6	6	120	120
F3X3LG6	3.25 x 3.12	82.6 x 79.2	0.20	5.0	C3LG6	6	60	120
F3X4LG6	3.25 x 4.10	82.6 x 104.1	0.20	5.0	C3LG6	6	60	120
F3X5LG6	3.25 x 5.10	82.6 x 129.5	0.20	5.0	C3LG6	6	60	120
F4X2LG6	4.25 x 2.12	108.0 x 53.8	0.20	5.0	C4LG6	6	60	120
F4X3LG6	4.25 x 3.12	108.0 x 79.2	0.20	5.0	C4LG6	6	60	120
F4X4LG6	4.25 x 4.10	108.0 x 104.1	0.20	5.0	C4LG6	6	60	120
F4X5LG6	4.25 x 5.10	108.0 x 129.5	0.20	5.0	C4LG6	6	60	120
F6X4LG6	6.25 x 4.15	158.8 x 105.4	0.20	5.0	C6LG6	6	60	120

Part number shown for LG (Light Gray). For other color availability see color selection guide, page C1.48.
Base and cover sold separately.
*"H" dimension includes duct and cover.

Part Numbering System for Panduct® Wiring Duct

G 2 X 2 LG — 6 -A

Type
G = Wide Slot
F = Narrow Slot
FL = Flexible Duct
FS = Solid Wall
H = Hinged Cover Wide Slot
HN = Hinged Cover, Narrow Slot
HS = Hinged Cover, Solid Wall
D = Round Hole
NNC = Halogen Free, Metric
NE = Halogen Free
MC = Narrow Slot, Metric
TNC = Low Smoke, Halogen Free

Nominal Width
In. or mm

Nominal Height
In. or mm

Color
LG = Light Gray
WH = White
BL = Black
IB = Intrinsic Blue
IG = International Gray

Length
6 ft. or 2m

Options
-A = Adhesive backed
NM = No mounting holes
= Leave blank for no options

ELEMECH INC. 630-499-7080 · www.elemechinc.com	Rev: 0	Device Tag:	
	Date: 8/20/2019		
Manuf.: . PNo: Panduit: C2LG6	By: MBS	Job Number: EVC7838	Page # 1/1

DIN RAILS

IBOCO Integrated Panel Management

42-063-007

Catalog Number	Lengths per Pack
G1	12
G1F	12
G1F1	24
OMEGA 2F	20
OMEGA 2F1	40*
OMEGA 3	20
OMEGA 3F	20
OMEGA 3F1	40*
OMEGA 3FD	20
OMEGA 3A	10
OMEGA 3AF	10
OMEGA 3AF1	20*
OMEGA 3AFD	10
OMEGA 3B	10
OMEGA 3B1	10*
OMEGA 75	2

Treated with galvanic zinc plating and passivation (gal Zn 8c according to Din 50960)
Minimum thickness 6 microns
Standard length: 2 meters (6'6¾")

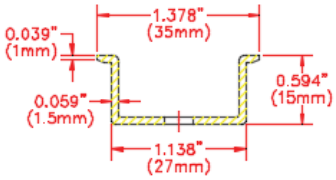

FRONT SECTION

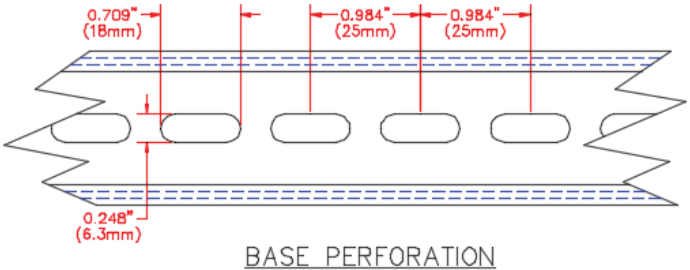

BASE PERFORATION

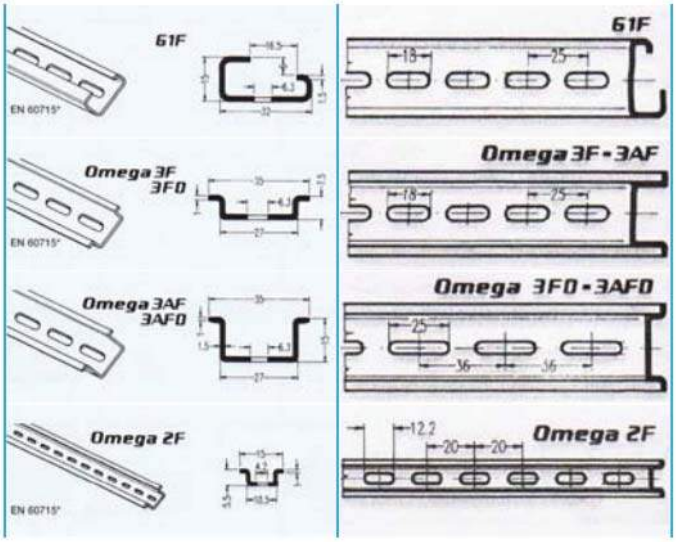

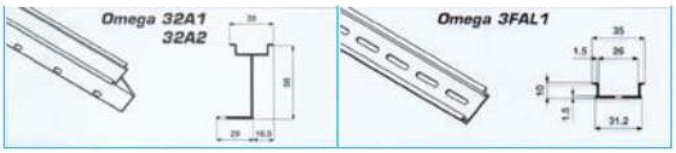

ELEMECH INC.
630-499-7080 · www.elemechinc.com

Manuf.: . PNo: Iboco: Omega 3 AF	Rev: 0	Device Tag:	
	Date: 8/20/2019		
	By: MBS	Job Number: EVC7838	Page # 1/1

Wire – MTW Type

51-000-062

CONDUCTORS:
- 22 AWG - 8AWG Stranded Tinned Copper per ASTM B-33
- 22 AWG - 10 AWG Solid Tinned Copper per ASTM M-33

INSULATION:
- Color-Coded Polyvinyl Chloride (PVC)

TEMPERATURE RANGE/ VOLTAGE RATING:
- UL 1011/1015/1028/BC-5W2: 105°C/600V
- UL MTW: 90°C/600V
- CSA AWM I A/B & TEW: 105°C/600V

FLAME COMPLIANCES:
- UL VW-1
- CSA FT-1

INDUSTRY APPROVALS:
- UL Standard 758 - Styles 1011/1015/1028/1032/1230/1231/1335/1344
- UL Standard 1063 - MTW
- UL Standard 1426 - BC-5W2: 16 AWG - 8 AWG
- CSA AWM I A/B & TEW
- UL THHW
- UL CT Tray Rated
- SAE J378

STANDARD COLORS:
- Black, Orange, Blue, Violet, White, Yellow, Brown, Green/Yellow, Red, Green, Gray

OPTIONS:
- Stripes available upon request (minimums may apply)
- Other copper constructions available upon request (minimums may apply)

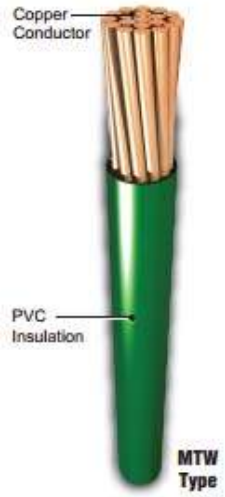

Catalog Number	Description
F22027	22 AWG (7/.0096) TC AWM 1015
F20037	20 AWG (10/30) TC AWM 1015
F18054	18 AWG (16/30) TC AWM 1015
F16032	16 AWG (26/30) TC AWM 1015
F14037	14 AWG (41/30) TC AWM 1015
F12024	12 AWG (65/30) TC AWM 1015
F10012	10 AWG (105/30) TC AWM 1015
F08010	8 AWG (7X19/29) TC AWM 1028

TEW/MTW Wire (Tinned Copper) Applications:

- This tinned copper hook up wire may be used for wiring of machine tools, appliances, and control cabinets.

UL LISTED

Bulletin 855P Panel Mount Alarms
Signaling Solutions…Loud and Clear

Allen-Bradley
Rockwell Automation

01-005-005

www.rockwellautomation.com

Advantages

- Mount in a standard 22.5 mm or 30 mm hole (with adapter ring)
- UL Type 4/4X/13, IP65 rated
- Sound output range from 80 dB to 105 dB @ 1 meter
- Selectable continuous or pulsing sounders and flashing or steady LED available
- Panel mount strobe light version available
- Combination sounder and LED products available to reduce your panel space
- Adjustable volume (ME and LE units)
- 12V AC/DC, 24V AC/DC, 120V AC, and 240V AC available
- Plug-in Terminal Block - IP2X Rated
- Rear securing eliminates unauthorized product removal
- cULus listed and CE Marked

Copyright © 2003 Rockwell Automation, Inc. All rights reserved.

c UL us LISTED

855P - B ___ ___ ___

a b c d

b

	Voltage
Code	Description
30	12...24V AC/DC
10	120V AC
20	240V AC

c

	Size
Code	Description
SE	30 mm
ME	45 mm
LE	65 mm

d

	Mounting Hole
Code	Description
22	22.5 mm

30 mm Panel Mount Sounder

45 mm Panel Mount Sounder

65 mm Panel Mount Sounder

ELEMECH INC. 630-499-7080 · www.elemechinc.com	Rev: 0	Device Tag: AH1	
	Date: 8/20/2019		
Manuf.: . PNo: Allen-Bradley: 855P-B10ME22	By: MBS	Job Number: EVC7838	Page # 1/1

GV2 Manual Starter and Protector

Schneider Electric

03-058-048

GV2P21 with
GV2GH7 installed

Table 47: GV2 Manual Motor Controller and Protector Horsepower Ratings

Catalog Number		Thermal Trip Setting Range (A)	Maximum Horsepower Ratings						
Push Button	Rotary Handle		1 Ø			3 Ø			
GV2ME [1]	GV2P		120 V	208 V	240 V	208 V	240 V	480 V	600 V [2]
GV2ME01	GV2P01	0.11–0.16	—	—	—	—	—	—	—
GV2ME02	GV2P02	0.016–0.25	—	—	—	—	—	—	—
GV2ME03	GV2P03	0.25–0.40	—	—	—	—	—	—	—
GV2ME04	GV2P04	0.40–0.63	—	—	—	—	—	—	—
GV2ME05	GV2P05	0.63–1	—	—	—	—	—	—	—
GV2ME06	GV2P06	1–1.6	—	—	0.1	—	—	0.75	0.75
GV2ME07	GV2P07	1.6–2.5	—	0.16	0.16	0.5	0.5	1	1.5
GV2ME08	GV2P08	2.5–4	0.125	0.25	0.33	0.75	0.75	2	3
GV2ME10	GV2P10	4–6.3	0.25	0.5	0.5	1	1.5	3	5
GV2ME14	GV2P14	6–10	0.5	1	1.5	2	3	5	7.5
GV2ME16	GV2P16	9–14	0.75	2	2	3	3	10	10
GV2ME20	GV2P20	13–18	1	2	3	5	5	10	15
GV2ME21	GV2P21	17–23	1.5	3	3	5	7.5	15	20
GV2ME22	GV2P22	20–25	2	3	—	7.5	—	15	20
GV2ME32 [3]	GV2P32	24–32	2	5	5	7.5	10	20	25

Additional GV2 Wiring Accessories

Description	Application	Sold in Lots of	Catalog Number	Weight, lb (kg)
Incoming line insulator	For GV2P when used in UL 508 Type E applications	10	GV2GH7	0.09 (0.040)

Table 55: Accessories for GV3P

Description	For Manual Motor Controllers	Catalog Number	Weight lb (kg)
Cover, large spacing, UL 508 Type E (only one cover is required on the supply side)	GV3P••	GV3G66 [1]	0.44 (0.02)

Product certifications

CCC UL DNV
GL EAC CSA
RINA BV ATEX

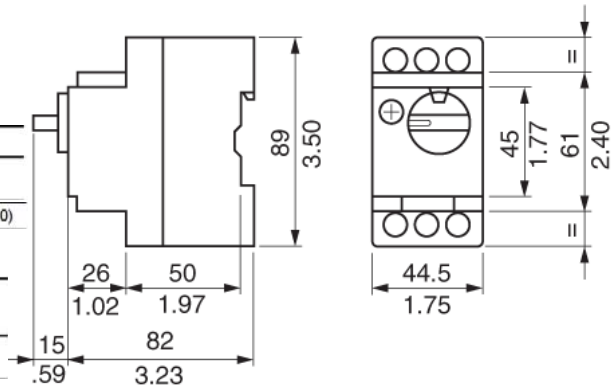

ELEMECH INC.
630-499-7080 · www.elemechinc.com

Rev: 0	Device Tag: CB1,2		
Date: 8/20/2019			
Manuf.: . PNo: Square D: GV3G66	By: MBS	Job Number: EVC7838	Page # 1/1

Add-on blocks common to TeSys GV2-GV3

Schneider Electric
Square D

23-058-016

GV2-GV3

CONTACT BLOCKS

Instantaneous auxiliary contacts		N/O or N/C	N/O + N/C	N/O + N/O
Mounting position	Left-hand side	-	GVAN11[1]	GVAN20[1]
	Front	GVAE1	GVAE11[1]	GVAE20[1]

(1) For spring terminal version add 3 to the end of the reference, example: GVAN11 becomes GVAN113

Fault contact + instantaneous auxiliary contact		N/O (fault) + N/C	N/O (fault) + N/O	N/C (fault) + N/C	N/C (fault) + N/O
Mounting position	Left-hand side	GVAD1001	GVAD1010	GVAD0101	GVAD0110

Short-circuit signalling contact		C/O with form C contact
Mounting position	Left-hand side	GVAM11

ELEMECH INC. 630-499-7080 · www.elemechinc.com	Rev: 0	Device Tag: CB1,2	
	Date: 8/20/2019		
Manuf.: . PNo: Square D: GVAM11	By: MBS	Job Number: EVC7838	Page # 1/1

Multi 9

Schneider Electric

03-058-119

UL 489 / CSA C22.2 No 5 / IEC/EN 60947-2 / GB 14048-2

C60BP are multi-standard miniature circuit breakers and branch circuit protection as defined by UL 489. It combines following functions:

- circuit protection against short-circuit currents
- circuit protection against overload currents
- tripping and fault indication by the addition of auxiliaries.

Number of 18 mm (0.71 in.) poles	Rating (A) 25°C/77°F	Breaking capacity (kA rms) AIR UL 489 / CSA C22.2 No 5				Icu IEC 60947-2			
	Voltage (Ue)	277 V ∿	240 V ∿	120 V ∿	60 V ⎓	440 V ∿	415 V ∿	240 V ∿	60 V ⎓
1P	0.5 to 35	10	14	14	10	-	3	10	20
	40 to 63	-	10	10	10	-	3	10	20
	Voltage (Ue)	480Y/277 V ∿		240 V ∿	125 V ⎓	440 V ∿	415 V ∿	240 V ∿	125 V ⎓
2P	1 to 25	10		14	10	6	10	20	-
	30 to 35	10		14	-	6	10	20	-
3P	1 to 35	10		14	-	6	10	20	-
2P/3P	40 to 63	-		10	-	6	10	20	-

Electrical diagrams

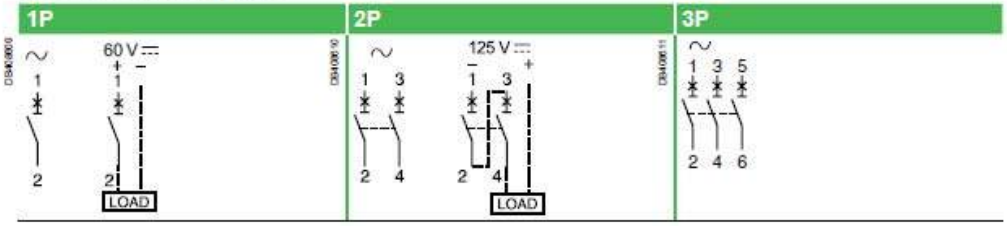

Catalogue numbers

Tunnel terminal connection

Type	UL489 and CSA voltages	1P				2P			3P		
Auxiliaries		Remote indication and tripping, see page 43									
Rating (In)		Curve Z	C	D (=K)	Width in 9 mm modules	Curve C	D (=K)	Width in 9 mm modules	Curve C	D (=K)	Width in 9 mm modules
C60BP											
0.5	480Y/277 V and 240 V	M9F44170	M9F42170	M9F43170	2	-	-	4	-	-	6
1		M9F44101	M9F42101	M9F43101		M9F42201	M9F43201		M9F42301	M9F43301	
2		M9F44102	M9F42102	M9F43102		M9F42202	M9F43202		M9F42302	M9F43302	
3		M9F44103	M9F42103	M9F43103		M9F42203	M9F43203		M9F42303	M9F43303	
4		M9F44104	M9F42104	M9F43104		M9F42204	M9F43204		M9F42304	M9F43304	
5		M9F44105	M9F42105	M9F43105		M9F42205	M9F43205		M9F42305	M9F43305	
6		M9F44106	M9F42106	M9F43106		M9F42206	M9F43206		M9F42306	M9F43306	
8		M9F44108	M9F42108	M9F43108		M9F42208	M9F43208		M9F42308	M9F43308	
10		M9F44110	M9F42110	M9F43110		M9F42210	M9F43210		M9F42310	M9F43310	
15		M9F44115	M9F42115	M9F43115		M9F42215	M9F43215		M9F42315	M9F43315	
20		M9F44120	M9F42120	M9F43120		M9F42220	M9F43220		M9F42320	M9F43320	
25		M9F44125	M9F42125	M9F43125		M9F42225	M9F43225		M9F42325	M9F43325	
30		M9F44130	M9F42130	M9F43130		M9F42230	M9F43230		M9F42330	M9F43330	
35		M9F44135	M9F42135	M9F43135		M9F42235	M9F43235		M9F42335	M9F43335	
40	240 V only	M9F44140	M9F42140	M9F43140	2	M9F42240	M9F43240	4	M9F42340	M9F43340	6
45		M9F44145	M9F42145	M9F43145		M9F42245	M9F43245		M9F42345	M9F43345	
50		M9F44150	M9F42150	M9F43150		M9F42250	M9F43250		M9F42350	M9F43350	
63		M9F44163	M9F42163	M9F43163		M9F42263	M9F43263		M9F42363	M9F43363	

Weight (g / oz)

Circuit-breaker	
Type	C60BP
1P	130 g / 4.58 oz
2P	260 g / 9.17 oz
3P	390 g / 13.76 oz

Dimensions (mm / inches)

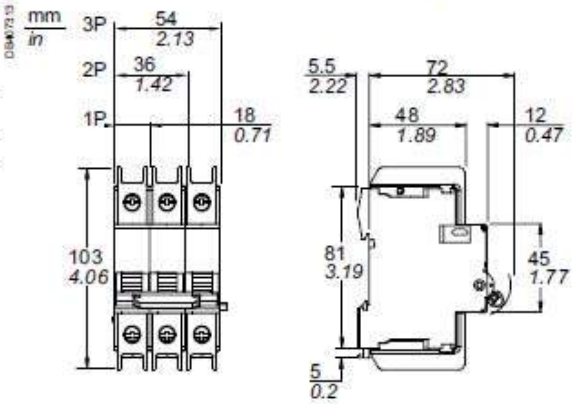

C60BPTunnel terminal

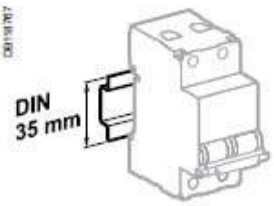

Clip on DIN rail 35 mm.

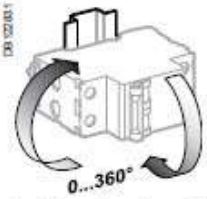

Indifferent position of installation.

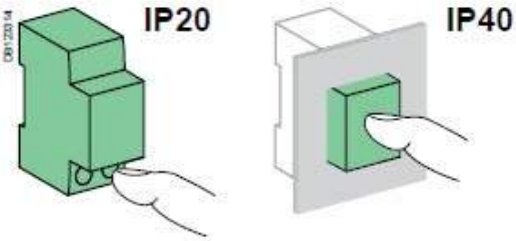

Technical data

Main characteristics			
Insulation voltage (Ui)			500 V
Service breaking capacity (Ics)		In alternating current	75 % of Icu
		In direct current	100 % of Icu
Pollution degree			3
Rated impulse withstand voltage (Uimp)			6 kV
Thermal tripping	Reference temperature		25°C / 77°F
Magnetic tripping	Z curve	In alternating current	3 In ± 20 %
		In direct current	4.2 In ± 20 %
	C curve	In alternating current	8.5 In ± 20 %
		In direct current	12 In ± 20 %
	D curve (=K curve)	In alternating current	12 In ± 20 %
		In direct current	17 In ± 20 %

Additional characteristics		
Degree of protection (IEC 60529)	Device only	IP20
	Device in modular enclosure	IP40 Insulation class II
Endurance (O-C)	Electrical	10,000 cycles
	Mechanical	20,000 cycles
Operating temperature		-30°C to +70°C / -22°F to 158°F
Storage temperature		-40°C to +80°C / -40°F to 176°F
Tropicalization (IEC 60068-1)		Treatment 2 (relative humidity 95 % at 55°C / 131°F)
Dissipated power		See page 68

Zelio® Plug-in Relays
RXM

Telemecanique

06-058-011

RXM●AB2F7

RXM Miniature Relays (page 4)

2 pole relays; 12 A, 1/2 hp (IEC rating = 12 A)
3 pole relays; 10 A, 1/3 hp (IEC rating = 10 A)
4 pole relays; 8 A, 1/3 hp (IEC rating = 6 A)
4 pole relays; 3 A (low level), 1/16 hp (IEC rating = 3 A)

- Mechanical "relay status" indicator on all relays
- Pilot light option available
- Manual operator optional for all relays
- Built-in marking area

Insulation characteristics

Rated insulation voltage (Ui)		250 V (IEC), 300 V (UL, CSA)
Rated impulse withstand voltage (Uimp)		3.6 kV (1.2/50 µs)
Dielectric strength (rms voltage)	Between coil and contact	2,500 Vac
	Between poles	2,500 Vac
	Between contacts	1,500 Vac

Contact characteristics

Relay type			**RXM2AB●●●**	**RXM3AB●●●**	**RXM4AB●●●**
Number and type of contacts (see page 12)			DPDT	3PDT	4PDT
Contact materials			AgNi		
Conventional thermal current (Ith)	For ambient temperature ≤ 131 °F (55 °C)		12 A	10 A	6 A
Rated operational current	Conforming to IEC in utilization category AC-1	N.O.	12 A	10 A	6 A
		N.C.	6 A	5 A	3 A
	Conforming to UL Resistive @277 Vac, hp @120 Vac		12 A, 1/2 hp	10 A, 1/3 hp	8 A, 1/3 hp
Maximum operating rate In operating cycles/hour	No load		18,000		
	Under load		1,200		
Switching voltage	Maximum		250 Vac/Vdc		
Switching capacity	Minimum		10 mA on 17 V		
	Maximum		3,000 VA	2,500 VA	1,500 VA
Utilization coefficient			20%		
Mechanical durability in millions of operating cycles			10		
Electrical durability in millions of operating cycles	Resistive load		0.1		

Coil characteristics

Average consumption		AC	1.2 VA
		DC	0.9 W
Drop-out voltage threshold		AC	≥ 0.15 Uc
		DC	≥ 0.1 Uc
Operating time (response time)	Between coil energization and making of the N.O. contact	AC	20 ms
		DC	20 ms
	Between coil de-energization and making of the N.C. contact	AC	20 ms
		DC	20 ms

Coil voltage Uc			**12 V**	**24 V**	**48 V**	**110 V**	**120 V**	**125 V**	**220 V**	**230 V**	**240 V**
Relay coil voltage codes			**JD**	**BD**	**ED**	**FD**	**—**	**GD**	**MD**	**—**	**—**
DC	Average resistance at 68 °F (20 °C) ± 10%		160 Ω	650 Ω	2,600 Ω	11,000 Ω	—	11,000 Ω	14,000 Ω	—	—
	Operating voltage limits	Min.	9.6 V	19.2 V	38.4 V	88 V	—	100 V	176 V	—	—
		Max.	13.2 V	26.4 V	52.8 V	121 V	—	138 V	242 V	—	—
Relay coil voltage codes			**—**	**B7**	**E7**	**—**	**F7**	**—**	**M7**	**P7**	**U7**
AC	Average resistance at 68 °F (20 °C) ± 15%		—	180 Ω	770 Ω	—	4,430 Ω	—	15,000 Ω	15,000 Ω	15,500 Ω
	Operating voltage limits	Min.	—	19.2 V	38.4 V	—	96 V	—	176 V	184 V	192 V
		Max.	—	26.4 V	52.8 V	—	132 V	—	242 V	253 V	264 V

Environment

Dielectric strength	2000 V AC (between poles) 2000 V AC (between coil and contact) 1300 V AC (between contacts)
Product certifications	CSA GOST Lloyds UL
Standards	EN/IEC 61810-1 UL 508 CSA C22.2 No 14

Telemecanique

06-058-011

Miniature relays with lockable test button, without LED

Coil Voltage	Number and type of contacts - Thermal current (Ith)								
	DPDT - 12 A			3PDT - 10 A			4PDT - 6 A		
	Catalog Number	Weight		Catalog Number	Weight		Catalog Number	Weight	
		lb.	kg		lb.	kg		lb.	kg
12 Vdc	RXM2AB1JD	0.082	0.037	RXM3AB1JD	0.084	0.038	RXM4AB1JD	0.080	0.036
24 Vdc	RXM2AB1BD	0.082	0.037	RXM3AB1BD	0.084	0.038	RXM4AB1BD	0.080	0.036
48 Vdc	RXM2AB1ED	0.082	0.037	RXM3AB1ED	0.084	0.038	RXM4AB1ED	0.080	0.036
110 Vdc	RXM2AB1FD	0.082	0.037	RXM3AB1FD	0.084	0.038	RXM4AB1FD	0.080	0.036
220 Vdc	—	—	—	—	—	—	RXM4AB1MD	0.080	0.036
24 Vac	RXM2AB1B7	0.082	0.037	RXM3AB1B7	0.084	0.038	RXM4AB1B7	0.080	0.036
48 Vac	RXM2AB1E7	0.082	0.037	RXM3AB1E7	0.084	0.038	RXM4AB1E7	0.080	0.036
120 Vac	RXM2AB1F7	0.082	0.037	RXM3AB1F7	0.084	0.038	RXM4AB1F7	0.080	0.036
230 Vac	RXM2AB1P7	0.082	0.037	RXM3AB1P7	0.084	0.038	RXM4AB1P7	0.080	0.036
240 Vac	—	—	—	—	—	—	RXM4AB1U7	0.080	0.036
Miniature relays with lockable test button, with LED									
12 Vdc	RXM2AB2JD	0.082	0.037	RXM3AB2JD	0.084	0.038	RXM4AB2JD	0.080	0.036
24 Vdc	RXM2AB2BD	0.082	0.037	RXM3AB2BD	0.084	0.038	RXM4AB2BD	0.080	0.036
48 Vdc	RXM2AB2ED	0.082	0.037	RXM3AB2ED	0.084	0.038	RXM4AB2ED	0.080	0.036
110 Vdc	RXM2AB2FD	0.082	0.037	RXM3AB2FD	0.084	0.038	RXM4AB2FD	0.080	0.036
125 Vdc	—	—	—	—	—	—	RXM4AB2GD	0.080	0.036
24 Vac	RXM2AB2B7	0.082	0.037	RXM3AB2B7	0.084	0.038	RXM4AB2B7	0.080	0.036
48 Vac	RXM2AB2E7	0.082	0.037	RXM3AB2E7	0.084	0.038	RXM4AB2E7	0.080	0.036
120 Vac	RXM2AB2F7	0.082	0.037	RXM3AB2F7	0.084	0.038	RXM4AB2F7	0.080	0.036
230 Vac	RXM2AB2P7	0.082	0.037	RXM3AB2P7	0.084	0.038	RXM4AB2P7	0.080	0.036

Miniature relays

RXM2●●●●● RXM3●●●●● RXM4●●●●●

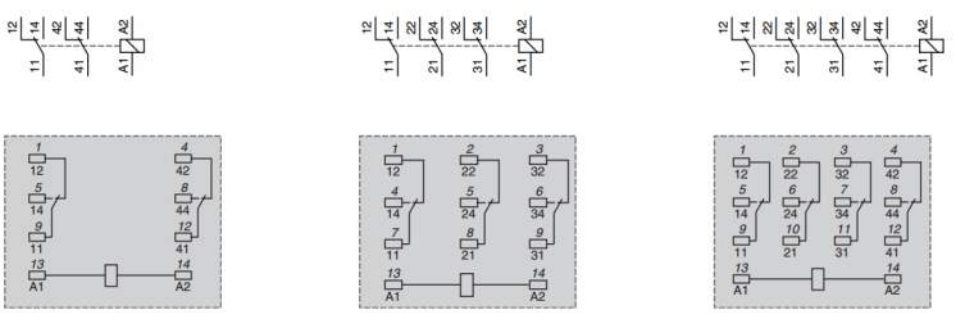

Resistive load AC

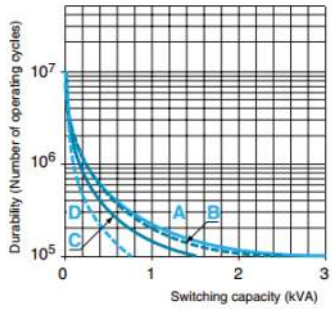

RXM ●●●●●● — Common view | RXM 2 — Pin side view | RXM 3 | RXM 4

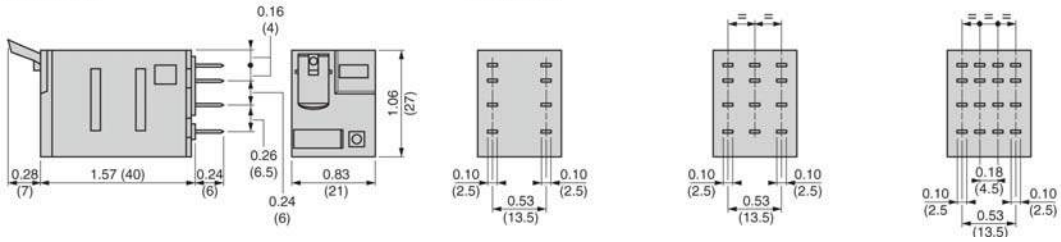

ELEMECH INC. 630-499-7080 · www.elemechinc.com	Rev: 0	Device Tag: CR1-11	
	Date: 8/20/2019		
Manuf.: . PNo: Square D: RXM3AB2F7	By: MBS	Job Number: EVC7838	Page # 2/2

RXZS2

bus jumper for Zelio Relay RXZ sockets with separate contacts

06-058-012

Main

Commercial Status	Commercialised
Range of product	Zelio Relay
Accessory / separate part type	Jumper
Accessory / separate part designation	Bus jumper
Sale per indivisible quantity	10

Complementary

Product compatibility	Socket RXZ
Accessory / separate part destination	All RXZ sockets with separate contacts
[Ith] conventional free air thermal current	5 A
Product weight	0.005 kg

Ordering and shipping details

Category	21128 - ZELIO ICE CUBE RELAY ACCESSORIES
Discount Schedule	CP2
GTIN	00785901924098
Nbr. of units in pkg.	10
Package weight(Lbs)	0.01
Stock Code	Stock - Normally stocked in distribution facility
Returnability	Y
Country of origin	CN

RXZE2S108M

Complementary

[Ith] conventional free air thermal current	12 A 5 A with bus jumper
[Ue] rated operational voltage	< 250 V
Tightening torque	<= 1 N.m (M3 screw(s))
Fixing mode	By screw mounting on panel Clip-on mounting on 35 mm symmetrical DIN rail
Marking	CE
Width	27 mm
Product weight	0.058 kg 0.07 kg

Environment

Standards	IEC 61984
Product certifications	CSA UL
Ambient air temperature for storage	-40...85 °C
Ambient air temperature for operation	-40...55 °C
IP degree of protection	IP20 conforming to EN/IEC 60529
Dielectric strength	2500 V
RoHS EUR status	Compliant
RoHS EUR conformity date	0801

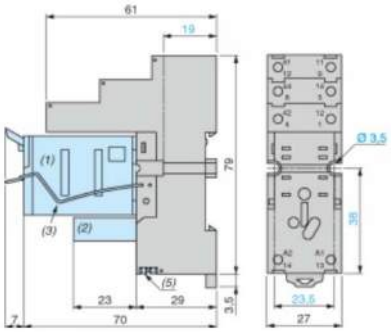

1 Relay
2 Protection Module
3 Carriage Stirrup
5 2 Links connection

Approvals for Sockets:

File CCN E172326 SWIV2, SWIV8 — File 230765 Class 3211 07 — RoHS Compliant

RXZE2S111M

Complementary

[Ith] conventional free air thermal current	10 A 5 A with bus jumper
[Ue] rated operational voltage	< 250 V
Tightening torque	<= 1 N.m (M3 screw(s))
Fixing mode	By screw mounting on panel Clip-on mounting on 35 mm symmetrical DIN rail
Marking	CE
Width	27 mm
Product weight	0.066 kg

Environment

Standards	IEC 61984
Product certifications	CSA UL
Ambient air temperature for storage	-40...85 °C
Ambient air temperature for operation	-40...55 °C
IP degree of protection	IP20 conforming to EN/IEC 60529
Dielectric strength	2500 V
RoHS EUR status	Compliant
RoHS EUR conformity date	0801

Dimensions

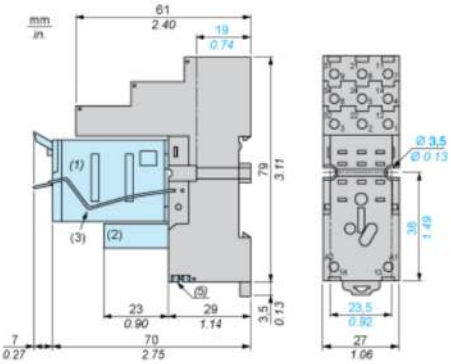

(1) Relays
(2) Protection module
(3) Maintaining clamp
(4) 2 elongated holes Ø 3.5 mm x 6.5 mm / Ø 0.13 in. x 0.25 in.
(5) 2 bus jumpers

Approvals for Sockets:

File CCN E172326 SWIV2, SWIV8 — File 230765 Class 3211 07 — RoHS Compliant

RXZE2S114M

Complementary

[Ith] conventional free air thermal current	10 A 5 A with bus jumper
[Ue] rated operational voltage	< 250 V
Tightening torque	<= 1 N.m (M3 screw(s))
Fixing mode	By screw mounting on panel Clip-on mounting on 35 mm symmetrical DIN rail
Marking	CE
Width	27 mm
Product weight	0.058 kg 0.07 kg

Environment

Standards	IEC 61984
Product certifications	CSA UL
Ambient air temperature for storage	-40...85 °C
Ambient air temperature for operation	-40...55 °C
IP degree of protection	IP20 conforming to EN/IEC 60529
Dielectric strength	2500 V
RoHS EUR status	Compliant
RoHS EUR conformity date	0801

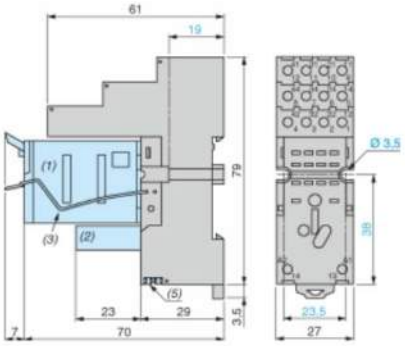

1 Relay
2 Protection Module
3 Carriage Stirrup
5 2 Links connection

Approvals for Sockets:

File CCN E172326 SWIV2, SWIV8 — File 230765 Class 3211 07 — RoHS Compliant

wieland

General Data

Part No: 07.311.4053.1
Description: End Cover – Black
Type of end plate – Yes
Snap in - Yes
Inflammability Class of insulation material acc. With UL94 – V0

07-063-000

ELEMECH INC. 630-499-7080 · www.elemechinc.com	Rev: 0	Device Tag: DB1	
	Date: 8/20/2019		
Manuf.: . PNo: Wieland: 07.311.4053.1	By: MBS	Job Number: EVC7838	Page # 1/1

Cross connectors, (jumper bars) uninsulated

wieland

07-063-001

Type	Part no.	Std. pack
WKM 4/15	**6 mm spacing Screw: M 3**	
2pole 9215 - 2	Z7.210.3227.0	50
3pole 9215 - 3	Z7.210.3327.0	50
4pole 9215 - 4	Z7.210.3427.0	50
5pole 9215 - 5	Z7.210.3527.0	50
6pole 9215 - 6	Z7.210.3627.0	50
70pole 9215 M-70	Z7.210.3027.0	10

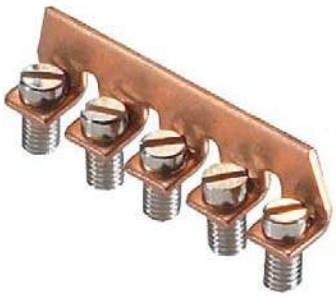

General

Colour	Other
Type	Cross connector
Modular spacing	6 mm
Number of bridged clamps	4
Mounting method	Screwable
Insulated	No

Accessories

Type	Cross connector
Mounting method	Screwable
Insulated	No
Colour	Other
Number of bridged clamps	4
Modular spacing	6 mm

ELEMECH INC. 630-499-7080 · www.elemechinc.com	Rev: 0	Device Tag: DB1	
	Date: 8/20/2019		
Manuf.: . PNo: Wieland: Z7.210.3427	By: MBS	Job Number: EVC7838	Page # 1/1

wieland

07-063-002

Multi-tier blocks with screw connection

selos

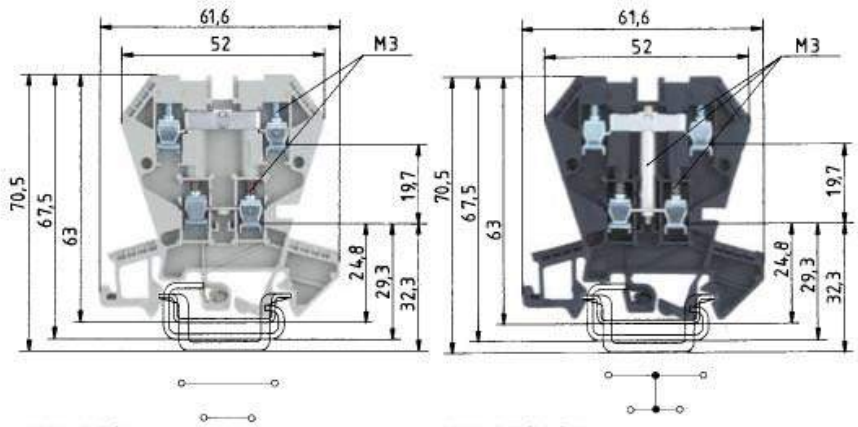

		WK 4 E/U				WK 4 E/U /VB			
0344 Ⓔx II 2GD IM2		fine-stranded	solid	V	A	fine-stranded	solid	V	A
Ex e I/II		0.5-4mm²	0.5-4mm²	400V/6kV/3[3]	32	0.5-4mm²	0.5-4mm²	400V/6kV/3	32
EN 60947-7-1:2002									
EN 60947-7-2:2002									
UL ratings	Field/factory wiring	No. 22-10 AWG		300V	20	No. 22-10 AWG		300V	20
CSA ratings		No. 20-12 AWG		300V	10	No. 20-12 AWG		300V	10
KEMA 02 ATEX 2114 U[1] EN 60079-0/EN 60079-7		0.5-4mm²	0.5-4mm²	275V	24/24[2]	0.5-4mm²	0.5-4mm²	275V	24
Width	Wire strip length	6mm			9mm	6mm			9mm
Approvals		ATEX LR				LR			

		Type	Part No.	Std. Pack	Type	Part No.	Std. Pack
Multi-tier block	gray	WK 4 E/U	57.404.7055.0	100			
Multi-tier block, vert. connected	black				WK 4 E/U/VB SCHWARZ	57.404.6955.1	100
Multi-tier ground block	green/yellow						
Function block	red						
Function block	orange						
Accessories							
1. Mounting rail TS 35, DIN rail 7.5 mm high	L = 2 m	35 x 27 x 7,5 EN 60715	98.300.0000.0	1	35 x 27 x 7,5 EN 60715	98.300.0000.0	1
Mounting rail TS 35, DIN rail, 15 mm high	L = 2 m	35 x 24 x 15 EN 60715	98.360.0000.0	1	35 x 24 x 15 EN 60715	98.360.0000.0	1
Mounting rail TS 32, G rail*	L = 2 m	9006 EN 60715 G-32	98.190.0000.0	1	9006 EN 60715 G-32	98.190.0000.0	1
2. End clamp with U-foot*	10mm wide	WE 1/U	Z5.523.5753.0	100	WE 1/U	Z5.523.5753.0	100
End clamp TS 35, with screw	8mm wide	9708/2 S 35	Z5.522.8553.0	100	9708/2 S 35	Z5.522.8553.0	100
End clamp TS 35, without screw	8mm wide	9708	Z5.522.7053.0	100	WEF 1/35	Z5.523.9353.0	100
3. End plate	gray	AP 4 E	07.311.4055.0	10	AP 4 E	07.311.4055.0	10
	blue						
4. Partition	gray	TW 4 E	07.311.5055.0	10	TW 4 E	07.311.5055.0	10
	blue						
5. Cross connector with screws	2 pole	9215-2	Z7.210.3227.0	50	9215-2	07.210.3227.0	1
for top tier	3 pole	9215-3	Z7.210.3327.0	50	9215-3	07.210.3327.0	1
	up to 6 pole	9215-6	Z7.210.3627.0	50	9215-6	07.210.3627.0	1
Jumper comb for lower tier block	2 pole	IVBS WK 4 E-2	Z7.256.4227.0	10	IVBS WK 4 E-2	Z7.256.4227.0	10
insulated, angled	up to 6 pole	IVBS WK 4 E-6	Z7.256.4627.0	10	IVBS WK 4 E-6	Z7.256.4627.0	10
Jumper comb for lower tier block	2 pole	IVB WK 4 E-2	Z7.255.2227.0	10	IVB WK 4 E-2	Z7.255.2227.0	10
insulated, straight	up to 6 pole	IVB WK 4 E-6	Z7.255.2627.0	10	IVB WK 4 E-6	Z7.255.2627.0	10
6. Partition plate with marking facility							
7. Single cover with marking facility		AD VB 4/15 GELB	04.326.2953.8	10	AD VB 4/15 GELB	04.326.2953.8	10
8. Cover with warning symbol over 4 blocks							

For more accessories see pages 60-77
For marking systems see pages 70-75

[1] Please note the mounting instructions on the cover page.
[2] With/without jumper
[3] With end plates 500 V/6 kV/3
* Do not use in Ex environments.
[4] Ratings to adjacent feed-through blocks of the same series and size
[5] For the current carrying capability of the mounting rail see AT catalog section **facts** & DATA.

ELEMECH INC. 630-499-7080 · www.elemechinc.com	Rev: 0	Device Tag: DB1	
	Date: 8/20/2019		
Manuf.: . PNo: Wieland: 57.404.6955.1	By: MBS	Job Number: EVC7838	Page # 1/1

Ratings:

Volts : 1000VAC/DC
Amps : 65 to 2260A based on NEC table 310.15(B)(16) 75°C ampacities
SCCR : 100kA with properly sized fuse
(See Mersen's PDB SCCR guide at ep.mersen.com or contact Mersen technical services)

Approvals:

- UL Listed to subject 1953, File E352417
- CSA Certified Class 6228 01

07-030-A004

MPDB62 and MPDB63 Open-Style PDBs

Catalog Numbers (Miniature)

Miniature (MPDB63133 shown for reference)

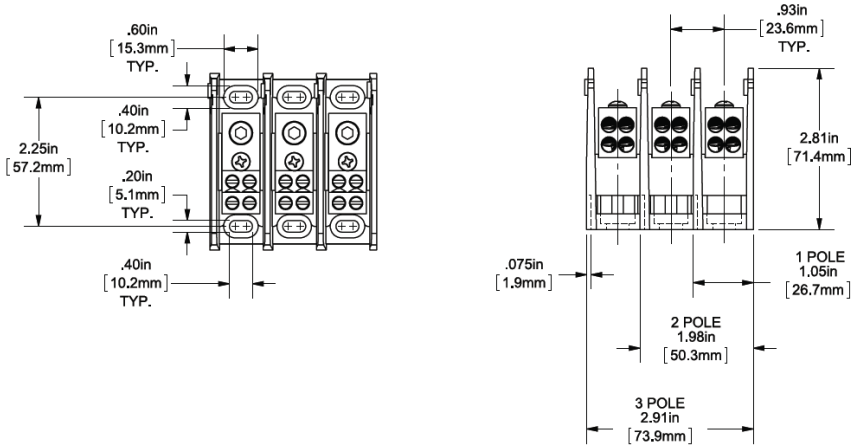

Line		Load		Catalog Numbers - Aluminum				Catalog Numbers - Copper				Amp Rating per Pole	
				Number of Poles				Number of Poles					
Wire Range	Openings per Pole	Wire Range	Openings per Pole	ADDER	1-P	2-P	3-P	ADDER	1-P	2-P	3-P	Al Wire	Cu Wire
Box-Box Configuration													
4 - 14	1	4 - 14	1	MPDB63100	MPDB63101	MPDB63102	MPDB63103	MPDB62100	MPDB62101	MPDB62102	MPDB62103	65	85
			4	MPDB63160	MPDB63161	MPDB63162	MPDB63163	MPDB62160	MPDB62161	MPDB62162	MPDB62163		
2/0 - 14	1	2/0 - 14	1	MPDB63150	MPDB63151	MPDB63152	MPDB63153	MPDB62150	MPDB62151	MPDB62152	MPDB62153	135	175
		2 - 14	2	MPDB63190	MPDB63191	MPDB63192	MPDB63193	MPDB62190	MPDB62191	MPDB62192	MPDB62193		
		4 - 14	4	MPDB63130	MPDB63131	MPDB63132	MPDB63133	MPDB62130	MPDB62131	MPDB62132	MPDB62133		
Box-Stud Configuration													
2/0 - 14	1	1/4-20 x 5/8	1	MPDB63140	MPDB63141	MPDB63142	MPDB63143	-	-	-	-	135	175
Stud-Stud Configuration													
1/4-20 x 5/8	1	1/4-20 x 5/8	1	-	-	-	-	MPDB62200	MPDB62201	MPDB62202	MPDB62203	240	240

Hinged Safety Cover for MPDB62 and MPDB63 series: Catalog number **MPDBC6263**

End Barrier for MPDB62 and MPDB63 series: Catalog Number **MPDBE6263**

MPDB66 and MPDB67 Open-Style PDBs

MERSEN

07-030-A004

Catalog Numbers (Intermediate)

Intermediate (MPDB67563 shown for reference)

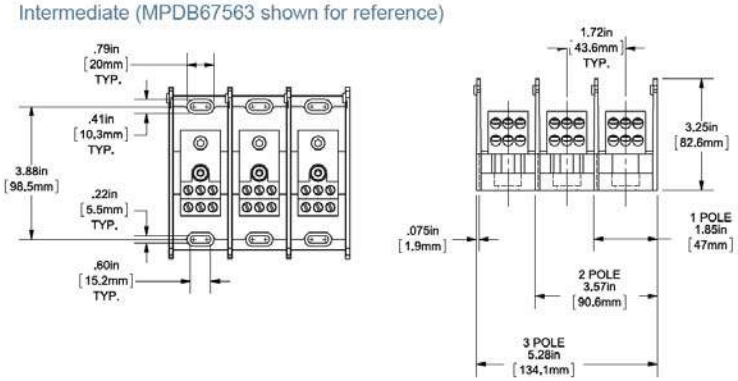

Line		Load		Catalog Numbers - Aluminum				Catalog Numbers - Copper				Amp Rating per Pole	
				Number of Poles				Number of Poles					
Wire Range	Openings per Pole	Wire Range	Openings per Pole	ADDER	1-P	2-P	3-P	ADDER	1-P	2-P	3-P	Al Wire	Cu Wire
Box-Box Configuration													
2/0 - 14	1	2/0 - 14	1	MPDB67050	MPDB67051	MPDB67052	MPDB67053	MPDB66050	MPDB66051	MPDB66052	MPDB66053	135	175
		2 - 14	4	MPDB67570	MPDB67571	MPDB67572	MPDB67573	MPDB66570	MPDB66571	MPDB66572	MPDB66573		
		2 - 14	6	MPDB67560	MPDB67561	MPDB67562	MPDB67563	MPDB66560	MPDB66561	MPDB66562	MPDB66563		
		2 - 14	8	MPDB67580	MPDB67581	MPDB67582	MPDB67583	MPDB66580	MPDB66581	MPDB66582	MPDB66583		
		6 - 14	10	MPDB67590	MPDB67591	MPDB67592	MPDB67593	MPDB66590	MPDB66591	MPDB66592	MPDB66593		
		10 - 14	12	MPDB67110	MPDB67111	MPDB67112	MPDB67113	MPDB66110	MPDB66111	MPDB66112	MPDB66113		
350 - 6	1	350 - 6	1	MPDB67000	MPDB67001	MPDB67002	MPDB67003	MPDB66000	MPDB66001	MPDB66002	MPDB66003	250	310
		2/0 - 14	2	MPDB67010	MPDB67011	MPDB67012	MPDB67013	MPDB66010	MPDB66011	MPDB66012	MPDB66013		
		2 - 14	4	MPDB67670	MPDB67671	MPDB67672	MPDB67673	MPDB66670	MPDB66671	MPDB66672	MPDB66673		
		2 - 14	6	MPDB67660	MPDB67661	MPDB67662	MPDB67663	MPDB66660	MPDB66661	MPDB66662	MPDB66663		
		2 - 14	8	MPDB67630	MPDB67631	MPDB67632	MPDB67633	MPDB66630	MPDB66631	MPDB66632	MPDB66633		
		6 - 14	10	MPDB67650	MPDB67651	MPDB67652	MPDB67653	MPDB66650	MPDB66651	MPDB66652	MPDB66653		
		10 - 14	15	MPDB67620	MPDB67621	MPDB67622	MPDB67623	MPDB66620	MPDB66621	MPDB66622	MPDB66623		
500 - 4	1	500 - 4	1	MPDB67400	MPDB67401	MPDB67402	MPDB67403	MPDB66400	MPDB66401	MPDB66402	MPDB66403	310	380
		350-6 & 2-14	1 & 3	MPDB67450	MPDB67451	MPDB67452	MPDB67453	MPDB66450	MPDB66451	MPDB66452	MPDB66453		
		4/0 - 10	2	MPDB67420	MPDB67421	MPDB67422	MPDB67423	-	-	-	-		
		2/0 - 14	4	MPDB67410	MPDB67411	MPDB67412	MPDB67413	MPDB66410	MPDB66411	MPDB66412	MPDB66413		
		2 - 14	6	MPDB67460	MPDB67461	MPDB67462	MPDB67463	MPDB66460	MPDB66461	MPDB66462	MPDB66463		
		2 - 14	8	MPDB67430	MPDB67431	MPDB67432	MPDB67433	-	-	-	-		
		6 - 14	10	MPDB67480	MPDB67481	MPDB67482	MPDB67483	-	-	-	-		
		10-14	18	MPDB67490	MPDB67491	MPDB67492	MPDB67493	MPDB66490	MPDB66491	MPDB66492	MPDB66493		
2/0 - 14	2	2/0 - 14	2	MPDB67020	MPDB67021	MPDB67022	MPDB67023	MPDB66020	MPDB66021	MPDB66022	MPDB66023	270	350
		2 - 14	6	MPDB67510	MPDB67511	MPDB67512	MPDB67513	MPDB66510	MPDB66511	MPDB66512	MPDB66513		
		2 - 14	8	MPDB67610	MPDB67611	MPDB67612	MPDB67613	MPDB66610	MPDB66611	MPDB66612	MPDB66613		
		6 - 14	10	MPDB67530	MPDB67531	MPDB67532	MPDB67533	MPDB66530	MPDB66531	MPDB66532	MPDB66533		
		10 - 14	15	MPDB67550	MPDB67551	MPDB67552	MPDB67553	MPDB66550	MPDB66551	MPDB66552	MPDB66553		
4/0 - 6	2	4/0 - 10	2	MPDB67520	MPDB67521	MPDB67522	MPDB67523	MPDB66520	MPDB66521	MPDB66522	MPDB66523	360	460
		2 - 14	6	MPDB67540	MPDB67541	MPDB67542	MPDB67543	MPDB66540	MPDB66541	MPDB66542	MPDB66543		

Hinged Safety Cover for MPDB66 and MPDB67 series: Catalog number **MPDBC6667**

End Barrier for MPDB66 and MPDB67 series: Catalog Number **MPDBE6667**

MPDB68 and MPDB69 Open-Style PDBs

Catalog Numbers (Large)

Large (MPDB69123 shown for reference)

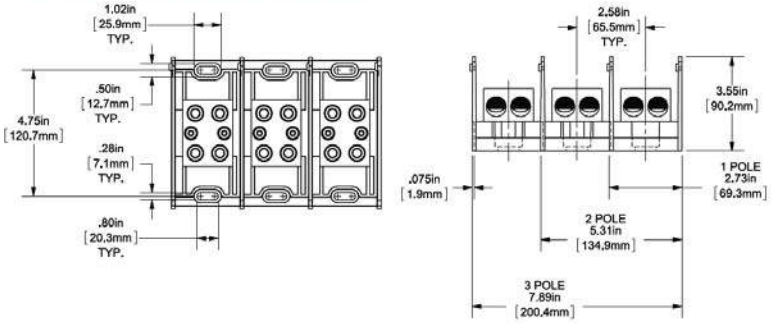

07-030-A004

Line		Load		Catalog Numbers - Aluminum				Catalog Numbers - Copper				Amp Rating per Pole	
				Number of Poles				Number of Poles					
Wire Range	Openings per Pole	Wire Range	Openings per Pole	ADDER	1-P	2-P	3-P	ADDER	1-P	2-P	3-P	Al Wire	Cu Wire
Box-Box Configuration													
350 - 6	1	2/0 - 14	6	MPDB69170	MPDB69171	MPDB69172	MPDB69173	-	-	-	-	250	310
		4 - 14	12	MPDB69150	MPDB69151	MPDB69152	MPDB69153	MPDB68150	MPDB68151	MPDB68152	MPDB68153		
500 - 4	1	500 - 4	1	MPDB69050	MPDB69051	MPDB69052	MPDB69053	-	-	-	-	310	380
		350 - 6	2	MPDB69060	MPDB69061	MPDB69062	MPDB69063	MPDB68060	MPDB68061	MPDB68062	MPDB68063		
		4/0 - 6	4	MPDB69510	MPDB69511	MPDB69512	MPDB69513	-	-	-	-		
		2/0 - 14	6	MPDB69070	MPDB69071	MPDB69072	MPDB69073	-	-	-	-		
		4 - 14	12	MPDB69080	MPDB69081	MPDB69082	MPDB69083	-	-	-	-		
600 - 2	1	600 - 2	1	MPDB69640	MPDB69641	MPDB69642	MPDB69643	-	-	-	-	340	420
1000 - 250	1	1000 - 250	1	MPDB69000	MPDB69001	MPDB69002	MPDB69003	-	-	-	-	445	545
		500 - 4	2	MPDB69010	MPDB69011	MPDB69012	MPDB69013	-	-	-	-		
		350 - 6	2	MPDB69020	MPDB69021	MPDB69022	MPDB69023	-	-	-	-		
		2/0 - 14	6	MPDB69030	MPDB69031	MPDB69032	MPDB69033	-	-	-	-		
		4 - 14	12	MPDB69040	MPDB69041	MPDB69042	MPDB69043	-	-	-	-		
4 - 14	2	4 - 14	12	MPDB69180	MPDB69181	MPDB69182	MPDB69183	-	-	-	-	130	170
2/0 - 14	2	4 - 14	12	MPDB69160	MPDB69161	MPDB69162	MPDB69163	MPDB68160	MPDB68161	MPDB68162	MPDB68163	270	350
		10 - 14	20	MPDB69600	MPDB69601	MPDB69602	MPDB69603	-	-	-	-		
350 - 6	2	350 - 6	2	MPDB69120	MPDB69121	MPDB69122	MPDB69123	MPDB68120	MPDB68121	MPDB68122	MPDB68123	500	620
		4/0 - 10	4	-	-	-	-	MPDB68320	MPDB68321	MPDB68322	MPDB68323		
		2/0 - 14	6	MPDB69130	MPDB69131	MPDB69132	MPDB69133	MPDB68130	MPDB68131	MPDB68132	MPDB68133		
		4 - 14	12	MPDB69140	MPDB69141	MPDB69142	MPDB69143	MPDB68140	MPDB68141	MPDB68142	MPDB68143		
500 - 4	2	500 - 4	2	MPDB69090	MPDB69091	MPDB69092	MPDB69093	MPDB68090	MPDB68091	MPDB68092	MPDB68093	620	760
		4/0 - 6	4	MPDB69310	MPDB69311	MPDB69312	MPDB69313	-	-	-	-		
		4/0 - 10	4	-	-	-	-	MPDB68310	MPDB68311	MPDB68312	MPDB68313		
		2/0 - 14	6	MPDB69100	MPDB69101	MPDB69102	MPDB69103	MPDB68100	MPDB68101	MPDB68102	MPDB68103		
		2/0 - 14	8	MPDB69350	MPDB69351	MPDB69352	MPDB69353	-	-	-	-		
		4 - 14	12	MPDB69110	MPDB69111	MPDB69112	MPDB69113	MPDB68110	MPDB68111	MPDB68112	MPDB68113		
600 - 2	2	600 - 2	2	MPDB69650	MPDB69651	MPDB69652	MPDB69653	-	-	-	-	680	840
		4-14 & 3/0-10	4 & 4	MPDB69540	MPDB69541	MPDB69542	MPDB69543	-	-	-	-		

Hinged Safety Cover for MPDB68 and MPDB69 series: Catalog number **MPDBC6869**

End Barrier for MPDB68 and MPDB69 series: Catalog Number **MPDBE6869**

SwitchLine
Non-fusible disconnect switches
Compact, Heavy duty
16A – 2000A, 600V

09-001-A014

Catalog number	3 pole	OT16F3	OT25F3	OT40F3	OT63F3	OT80F3	OT30F3	OT60F3	OT100F3
General purpose amp rating	A	20	30	40	60	80	30	60	100
Catalog reference	Page #	1.10	1.10	1.10	1.10	1.10	1.11	1.11	1.11
Approvals①									
	2 pole	—	—	—	—	—	—	—	—
	3 pole	CSA C22.2 No.14	CSA C22.2 No.14	CSA C22.2 No.14	CSA C22.2 No.14	CSA C22.2 No.14	CSA C22.2 No.4	CSA C22.2 No.4	CSA C22.2 No.4
	4 pole	CSA C22.2 No.14	CSA C22.2 No.14	CSA C22.2 No.14	CSA C22.2 No.14	CSA C22.2 No.14	CSA C22.2 No.4	CSA C22.2 No.4	CSA C22.2 No.4
Technical ratings CSA,UL②									
Max operating voltage	V	600	600	600	600	600	600VAC / 250VDC	600VAC / 250VDC	600VAC / 250VDC
Max horsepower rating									
Three phase									
208V	HP	3	7.5	10	15	20	10	20	25
240V	HP	5	7.5	10	15	20	10	20	30
480V	HP	10	15	20	30	40	20	40	50
600V	HP	10	20	25	30	40	30	40	50
Single phase									
120V	HP	1	1.5	2	2	2	2	3	5
240V	HP	2	3	5	7.5	10	5	7.5	15
Technical ratings IEC②									
Rated insulation and operational voltage. AC20 and DC20③	V	750	750	750	750	750	750	750	750
Rated thermal current, I_{th}									
AC 20/DC 20 open	A	25	32	40	63	80	40	63	115
AC 20/DC 20 enclosed	A	25	32	40	63	80	40	63	115
AC 21A ≤ 500V	A	16	25	40	63	80	40	63	100
690V	A	16	25	40	63	80	40	63	100
Rated operational power AC23									
400/415V	kW	7.5	9	11	22	37	15	18.5	37
690V	kW	7.5	9	11	15	18.5	15	15	37
Physical characteristics									
Weight ④ 3 pole	Kg	0.11	0.11	0.11	0.27	0.27	0.36	0.36	0.36
Dimension 3 pole	H mm	68	68	68	91	91	100	100	100
	W mm	35	35	35	53	53	70	70	70
	D mm	56	56	56	72	72	75	75	75
Accessories									
Terminal lug kit		Integral	Integral	Integral	Integral	Integral	Integral	Integral	Integral
Terminal shroud		•	•	•	•	•	•	•	•
Auxiliary contact		•	•	•	•	•	•	•	•
Handle CSA/UL/NEMA type									
Type 1, 3R, 12		•	•	•	•	•	•	•	•
Type 1, 3R, 4, 4X, 12		•	•	•	•	•	•	•	•
Handle type									
Selector		•	•	•	•	•	•	•	•
Pistol		•	•	•	•	•	•	•	•
Conversion kits									
6 pole		•	•	•	•	•	•	•	•
Transfer		•	•	•	•	•	•	•	•
Bypass		•	•	•	•	•	•	•	•
Mechanical interlock		•	•	•	•	•	•	•	•
Electrical interlock		—	—	—	—	—	—	—	—

• = Available
— = Not available

CSA approved, UL listed, IEC rated, CE marked

① CSA 22.2 No.4 (UL98) —CSA File #LR58077, UL File # E101914 , CSA 22.2 No. 14 (UL508) —CSA File #LR58247, UL File # E63822

ELEMECH INC. 630-499-7080 · www.elemechinc.com	Rev: 0	Device Tag: DS1	
	Date: 8/20/2019		
Manuf.: . PNo: ABB: OT63F3 Assembly	By: MBS	Job Number: EVC7838	Page # 1/1

CONTINUOUS HINGE WITH CLAMPS TYPE 4X WALL-MOUNT ENCLOSURES

PENTAIR

11-035-044

ENCLOSURE CATALOG NUMBER	ENCLOSURE DIMENSIONS (IN.)	SUB-PANEL CATALOG NUMBER
A-AHBCSS6LP	A x B x C	A APB

NOTE: 6 indicates 316 Stainless Steel.

APPLICATION

For use in indoor and outdoor corrosive environments that require a water-tight seal, this enclosure's seamless foam-in-place gasket and screw-down clamps provide a secure seal against contaminants.

SPECIFICATIONS

- 14 gauge Type 304 or Type 316L stainless steel bodies and doors
- Seams continuously welded and ground smooth
- Seamless foam-in-place gasket
- Rolled lip around three sides of door
- Stainless steel door clamp assembly
- Hasp and staple for padlocking
- Door removed by pulling stainless steel continuous hinge pin
- Data pocket is high-impact thermoplastic
- Collar studs provided for mounting optional panels
- Exterior hardware on Type 316L stainless steel enclosures matches enclosure material
- Bonding provision on door; grounding stud on body

FINISH

Door, sides, top and bottom have smooth #4 brushed finish.

ACCESSORIES

See also Accessories.
Fast-Operating Clamp Assembly
Panels for Type 3R, 4, 4X, 12 and 13 Enclosures
Junction Box and Wall-Mount Enclosure Swing Out Panel Kit
Steel and Stainless Steel Window Kits
H2OMIT™ Vent Drains, Type 4X
H2OMIT™ Thermoelectric Dehumidifier

MODIFICATION AND CUSTOMIZATION

Hoffman excels at modifying and customizing products to your specifications. Contact your local Hoffman sales office or distributor for complete information.

BULLETIN: A4S

INDUSTRY STANDARDS

UL 508A Listed; Type 3R, 4, 4X, 12; File No. E61997
cUL Listed per CSA C22.2 No 94; Type 3R, 4, 4X, 12; File No. E61997

NEMA/EEMAC Type 3, 3R, 4, 4X, 12, 13
CSA File No. 42186: Type 4, 4X, 12
IEC 60529, IP66
Meets NEMA Type 3RX requirements

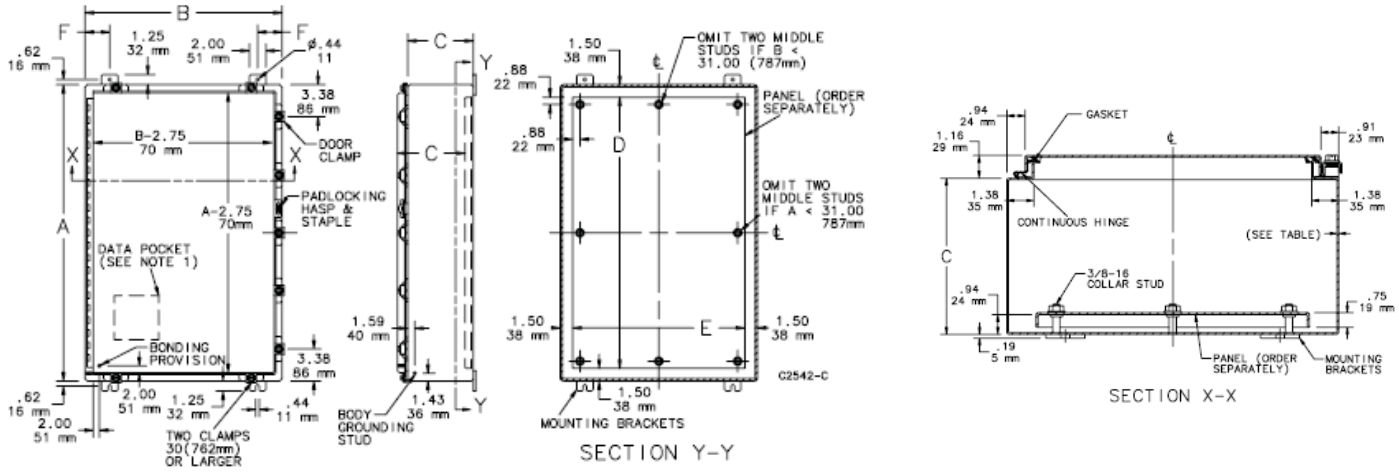

ELEMECH INC.
630-499-7080 · www.elemechinc.com

Rev: 0	Device Tag: EN1
Date: 8/20/2019	
By: MBS	Job Number: EVC7838
Page # 1/1	

Manuf.: . PNo: Hoffman: A-36H3612SSLP

SUB-PANELS FOR ENCLOSURES

nVent HOFFMAN

11-035-138

SUB-PANEL CATALOG NUMBER	SUB-PANEL DIMENSIONS (IN.)
A-DPESS	D x E

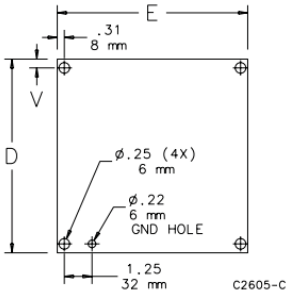

NOTE:

1. 6 indicates 316 Stainless Steel.
2. AL indicates Aluminum
3. G indicates Conductive Steel

Catalog Number	Material	Panel Size D x E (in.)	Panel Size D x E (mm)	Panel Gauge or Thickness	Edge Flanges	T (in.)	T (mm)	Number of Holes
A12P24	Painted steel	9.00 x 21.00	229 x 533	12 ga.	0	–	–	4
A12P24G	Conductive steel	9.00 x 21.00	229 x 533	12 ga.	0	–	–	4
A16P12	Painted steel	13.00 x 9.00	330 x 229	12 ga.	0	–	–	4
A16P12G	Conductive steel	13.00 x 9.00	330 x 229	12 ga.	0	–	–	4
A16P12SS6	Stainless Steel	13.00 x 9.00	330 x 229	12 ga.	0	–	–	4
A16P12AL	Aluminum	13.00 x 9.00	330 x 229	0.10 in./3 mm	0	–	–	4
A16P16	Painted steel	13.00 x 13.00	330 x 330	12 ga.	0	–	–	4
A16P16G	Conductive steel	13.00 x 13.00	330 x 330	12 ga.	0	–	–	4
A16P16SS6	Stainless Steel	13.00 x 13.00	330 x 330	12 ga.	0	–	–	4
A16P16AL	Aluminum	13.00 x 13.00	330 x 330	0.10 in./3 mm	0	–	–	4
A18P18	Painted steel	15.00 x 15.00	381 x 381	12 ga.	0	–	–	4
A18P18G	Conductive steel	15.00 x 15.00	381 x 381	12 ga.	0	–	–	4
A20P12	Painted steel	17.00 x 9.00	432 x 229	12 ga.	0	–	–	4
A20P12G	Conductive steel	17.00 x 9.00	432 x 229	12 ga.	0	–	–	4
A20P16	Painted steel	17.00 x 13.00	432 x 330	12 ga.	0	–	–	4
A20P16G	Conductive steel	17.00 x 13.00	432 x 330	12 ga.	0	–	–	4
A20P16SS6	Stainless Steel	17.00 x 13.00	432 x 330	12 ga.	0	–	–	4
A20P16AL	Aluminum	17.00 x 13.00	432 x 330	0.10 in./3 mm	0	–	–	4
A20P20	Painted steel	17.00 x 17.00	432 x 432	12 ga.	0	–	–	4
A20P20G	Conductive steel	17.00 x 17.00	432 x 432	12 ga.	0	–	–	4
A20P20SS6	Stainless steel	17.00 x 17.00	432 x 432	12 ga.	0	–	–	4
A20P20AL	Aluminum	17.00 x 17.00	432 x 432	0.10 in./3 mm	0	–	–	4
A24P16	Painted steel	21.00 x 13.00	533 x 330	12 ga.	0	–	–	4
A24P16G	Conductive steel	21.00 x 13.00	533 x 330	12 ga.	0	–	–	4
A24P16SS6	Stainless Steel	21.00 x 13.00	533 x 330	12 ga.	0	–	–	4
A24P20	Painted steel	21.00 x 17.00	533 x 432	12 ga.	2	0.75	19	4
A24P20G	Conductive steel	21.00 x 17.00	533 x 432	12 ga.	2	0.75	19	4
A24P20SS6	Stainless Steel	21.00 x 17.00	533 x 432	12 ga.	2	0.75	19	4
A24P20AL	Aluminum	21.00 x 17.00	533 x 432	0.10 in./3 mm	4	0.75	19	4
A24P24	Painted steel	21.00 x 21.00	533 x 533	12 ga.	2	0.75	19	4
A24P24G	Conductive steel	21.00 x 21.00	533 x 533	12 ga.	2	0.75	19	4
A24P24SS6	Stainless Steel	21.00 x 21.00	533 x 533	12 ga.	2	0.75	19	4
A24P24AL	Aluminum	21.00 x 21.00	533 x 533	0.10 in./3 mm	2	0.75	19	4
A30P16	Painted steel	27.00 x 13.00	686 x 330	12 ga.	2	0.75	19	4
A30P16G	Conductive steel	33.00 x 27.00	838 x 686	12 ga.	2	0.75	19	4
A30P20	Painted steel	27.00 x 17.00	686 x 432	12 ga.	2	0.75	19	4
A30P20G	Conductive steel	27.00 x 17.00	686 x 432	12 ga.	2	0.75	19	4
A30P20SS6	Stainless Steel	27.00 x 17.00	686 x 432	12 ga.	2	0.75	19	4
A30P24	Painted steel	27.00 x 21.00	686 x 533	12 ga.	2	0.75	19	4
A30P24G	Conductive steel	27.00 x 21.00	686 x 533	12 ga.	2	0.75	19	4
A30P24SS6	Stainless Steel	27.00 x 21.00	686 x 533	12 ga.	2	0.75	19	4
A30P24AL	Aluminum	27.00 x 21.00	686 x 533	0.10 in./3 mm	2	0.75	19	4
A30P30	Painted steel	27.00 x 27.00	686 x 686	12 ga.	4	0.75	19	4
A30P30G	Conductive steel	27.00 x 27.00	686 x 686	12 ga.	4	0.75	19	4
A30P30SS6	Stainless Steel	27.00 x 27.00	686 x 686	12 ga.	4	0.75	19	4
A36P16	Painted steel	33.00 X 13.00	838 X 330	12 ga.	2	0.75	19	4
A36P16G	Conductive steel	33.00 x 13.00	838 x 330	12 ga.	2	0.75	19	4
A36P24	Painted steel	33.00 x 21.00	838 x 533	12 ga.	2	0.75	19	6
A36P24G	Conductive steel	33.00 x 21.00	838 x 533	12 ga.	2	0.75	19	6
A36P24SS6	Stainless Steel	33.00 x 21.00	838 x 533	12 ga.	2	0.75	19	6
A36P24AL	Aluminum	33.00 x 21.00	838 x 533	0.10 in./3 mm	2	0.75	19	6
A36P30	Painted steel	33.00 x 27.00	838 x 686	12 ga.	4	0.75	19	6
A36P30G	Conductive steel	33.00 x 27.00	838 x 686	12 ga.	4	0.75	19	6
A36P30SS6	Stainless Steel	33.00 x 27.00	838 x 686	12 ga.	4	0.75	19	6
A36P30AL	Aluminum	33.00 x 27.00	838 x 686	0.10 in./3 mm	4	0.75	19	6
A36P36	Painted steel	33.00 x 33.00	838 x 838	12 ga.	4	0.75	19	8
A36P36G	Conductive steel	33.00 x 33.00	838 x 838	12 ga.	4	0.75	19	8
A36P36SS6	Stainless Steel	33.00 x 33.00	838 x 838	12 ga.	4	0.75	19	8
A40P24	Painted steel	37.00 x 21.00	940 x 533	12 ga.	4	0.75	19	6
A40P24G	Conductive steel	37.00 x 21.00	940 x 533	12 ga.	4	0.75	19	6
A40P30	Painted steel	37.00 x 29.00	940 x 737	12 ga.	4	0.75	19	4
A40P30G	Conductive steel	37.00 x 29.00	940 x 737	12 ga.	4	0.75	19	4
A42P24	Painted steel	39.00 x 21.00	991 x 533	12 ga.	2	0.75	19	6
A42P24G	Conductive steel	39.00 x 21.00	991 x 533	12 ga.	2	0.75	19	6
A42P30	Painted steel	39.00 x 27.00	991 x 686	12 ga.	4	0.75	19	6

SUB-PANELS FOR ENCLOSURES

nVent HOFFMAN

11-035-138

SUB-PANEL CATALOG NUMBER	SUB-PANEL DIMENSIONS (IN.)
A-DPESS	D x E

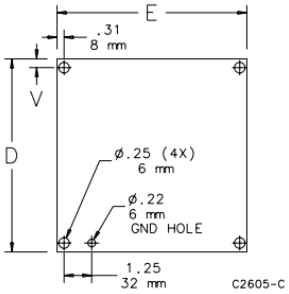

NOTE:

1. 6 indicates 316 Stainless Steel.
2. AL indicates Aluminum
3. G indicates Conductive Steel

Catalog Number	Material	Panel Size D x E (in.)	Panel Size D x E (mm)	Panel Gauge or Thickness	Edge Flanges	T (in.)	T (mm)	Number of Holes
A42P30G	Conductive steel	39.00 x 27.00	991 x 686	12 ga.	4	0.75	19	6
A42P30SS6	Stainless Steel	39.00 x 27.00	991 x 686	12 ga.	4	0.75	19	6
A42P36	Painted steel	39.00 x 33.00	991 x 838	12 ga.	4	0.75	19	8
A42P36G	Conductive steel	39.00 x 33.00	991 x 838	12 ga.	4	0.75	19	8
A42P36SS6	Stainless Steel	39.00 x 33.00	991 x 838	12 ga.	4	0.75	19	8
A42P42	Painted steel	39.00 x 39.00	991 x 991	12 ga.	4	0.75	19	8
A42P42G	Conductive steel	39.00 x 39.00	991 x 991	12 ga.	4	0.75	19	8
A48P24	Painted steel	45.00 x 21.00	1143 x 533	12 ga.	2	0.75	19	6
A48P24G	Conductive steel	45.00 x 21.00	1143 x 533	12 ga.	2	0.75	19	6
A48P30	Painted steel	45.00 x 27.00	1143 x 686	12 ga.	4	0.75	19	6
A48P30G	Conductive steel	45.00 x 27.00	1143 x 686	12 ga.	4	0.75	19	6
A48P36	Painted steel	45.00 x 33.00	1143 x 838	12 ga.	4	0.75	19	8
A48P36G	Conductive steel	45.00 x 33.00	1143 x 838	12 ga.	4	0.75	19	8
A48P36SS6	Stainless Steel	45.00 x 33.00	1143 x 838	12 ga.	4	0.75	19	8
A48P36AL	Aluminum	45.00 x 33.00	1143 x 838	0.10 in./3 mm	4	0.75	19	8
A48P42	Painted steel	45.00 x 39.00	1143 x 991	12 ga.	4	0.75	19	8
A48P42G	Conductive steel	45.00 x 39.00	1143 x 991	12 ga.	4	0.75	19	8
A48P48	Painted steel	44.00 x 44.00	1118 x 1118	11 ga.	4	0.84	21	10
A48P48G	Conductive steel	44.00 x 44.00	1118 x 1118	11 ga.	4	0.84	21	10
A54P42	Painted steel	50.00 x 38.00	1270 x 965	11 ga.	4	0.84	21	10
A54P42G	Conductive steel	50.00 x 38.00	1270 x 965	11 ga.	4	0.84	21	10
A60P24	Painted steel	57.00 x 21.00	1448 x 533	12 ga.	4	0.75	19	6
A60P24G	Conductive steel	57.00 x 21.00	1448 x 533	12 ga.	4	0.75	19	6
A60P30	Painted steel	57.00 x 27.00	1448 x 686	12 ga.	4	0.75	19	6
A60P30G	Conductive steel	57.00 x 27.00	1448 x 686	12 ga.	4	0.75	19	6
A60P36	Painted steel	57.00 x 33.00	1448 x 838	12 ga.	4	0.75	19	8
A60P36G	Conductive steel	57.00 x 33.00	1448 x 838	12 ga.	4	0.75	19	8
A60P36SS6	Stainless Steel	57.00 x 33.00	1448 x 838	12 ga.	4	0.75	19	8
A60P36AL	Aluminum	57.00 x 33.00	1448 x 838	0.10 in./3 mm	4	0.75	19	8
A60BFP42	Painted steel	56.00 x 38.00	1422 x 965	11 ga.	4	0.84	21	10
A60BFP42G	Conductive steel	56.00 x 38.00	1422 x 965	11 ga.	4	0.84	21	10
A60P48	Painted steel	56.00 x 44.00	1422 x 1118	11 ga.	4	0.84	21	10
A60P48G	Conductive steel	56.00 x 44.00	1422 x 1118	11 ga.	4	0.84	21	10
A60P60	Painted steel	56.00 x 56.00	1422 x 1422	11 ga.	4	0.84	21	10
A60P60G	Conductive steel	56.00 x 56.00	1422 x 1422	11 ga.	4	0.84	21	10
A72P36	Painted steel	69.00 x 33.00	1753 x 838	12 ga.	4	0.75	19	8
A72P36G	Conductive steel	69.00 x 33.00	1753 x 838	12 ga.	4	0.75	19	8
A72P60	Painted steel	68.00 x 56.00	1727 x 1422	11 ga.	4	0.84	21	10
A72P60G	Conductive steel	68.00 x 56.00	1727 x 1422	11 ga.	4	0.84	21	10
A72P72	Painted steel	68.00 x 68.00	1727 x 1727	11 ga.	4	0.84	21	10
A72P72G	Conductive steel	68.00 x 68.00	1727 x 1727	11 ga.	4	0.84	21	10

HF SIDE-MOUNT FILTER FANS

Hoffman

11-035-837

HF09
70 CFM (119 m^3/Hr.)

Performance Data **HF09 70 CFM (119 m^3/hr.) Side-Mount Filter Fans**

ELECTRICAL DATA			
Rated Voltage	**115**	**230**	**24**
Frequency (Hz)	50/60	50/60	—
Nominal Current Maximum (Amps)	.16/.14	.12/.10	.35
Power Consumption Maximum (Watts)	11.0/10.0	15.0/14.0	8.4
Power Connection		Terminal Block	
TYPE 12 / IP54 FILTER FANS			
RAL 7035 Light Gray:			
Catalog Number	**HF0916414**	**HF0926414**	**HF0924414**
FILTER FAN UNIT CONSTRUCTION			
Fan RPM	2600/2900	2600/2900	3200
Sound Pressure (dBA at 50/60 Hz)	43/46	43/46	43/46
Operating Temperature Range:			
Maximum (°F / °C)	131/55	131/55	149/65
Minimum (°F / °C)	14/-10	14/-10	-4/-20
Service Life (hours)	40,000	40,000	100,000
Unit Dimensions - H x W x D (in. / mm)		8.19 x 8.21 x 4.15/208 x 209 x 105	
Cutout Dimensions - H x W (in. / mm)		6.97 x 6.97/177 x 177	
Weight (lb. / kg)		2.13/1.0	
TYPE 12 / IP54 EXHAUST GRILLES			
RAL 7035 Light Gray:			
Catalog Number	**HG0900404**	**HG0900404**	**HG0900404**
ACCESSORIES			
Replacement Filters:			
Type 12 / IP54 Catalog Number	**89134425R**	**89134425R**	**89134425R**
Type 12 / IP55 Catalog Number	**89136409R**	**89136409R**	**89136409R**
Thermostat Catalog Number	**TWR60**	**TWR60**	**TWR60**
Shroud Catalog Number		**HH09GS35001, HH09GS61001, HH09SS04001**	

UL/cUL Listed; File No. E482010

ELEMECH INC. 630-499-7080 · www.elemechinc.com	Rev: 0	Device Tag: FAN1	
	Date: 8/20/2019		
Manuf.: . PNo: Hoffman: HF0916414	By: MBS	Job Number: EVC7838	Page # 1/1

HF SIDE-MOUNT FILTER FANS

Hoffman

11-035-838

Performance Data **HF09 70 CFM (119 m³/hr.) Side-Mount Filter Fans**

ELECTRICAL DATA			
Rated Voltage	**115**	**230**	**24**
Frequency (Hz)	50/60	50/60	—
Nominal Current Maximum (Amps)	.16/.14	.12/.10	.35
Power Consumption Maximum (Watts)	11.0/10.0	15.0/14.0	8.4
Power Connection		Terminal Block	
TYPE 12 / IP54 FILTER FANS			
RAL 7035 Light Gray:			
Catalog Number	**HF0916414**	**HF0926414**	**HF0924414**
RAL 9011 Black:			
Catalog Number	**HF0916413**	**HF0926413**	**HF0924413**
Free Airflow (CFM / m³/hr.)	70/119	70/119	70/119
Airflow with 1 Exhaust Grille (CFM / m³/hr.)	44/75	44/75	44/75
Airflow with 2 Exhaust Grilles (CFM / m³/hr.)	55/93	55/93	55/93
TYPE 12 / IP55 FILTER FANS			
RAL 7035 Light Gray:			
Catalog Number	**HF0916514**	**HF0926514**	**HF0924514**
RAL 9011 Black:			
Catalog Number	**HF0916513**	**HF0926513**	**HF0924513**
Free Airflow (CFM / m³/hr.)	33/56	33/56	33/56
Airflow with 1 Exhaust Grille (CFM / m³/hr.)	23/39	23/39	23/39
Airflow with 2 Exhaust Grilles (CFM / m³/hr.)	26/44	26/44	26/44
FILTER FAN UNIT CONSTRUCTION			
Fan RPM	2600/2900	2600/2900	3200
Sound Pressure (dBA at 50/60 Hz)	43/46	43/46	43/46
Operating Temperature Range:			
Maximum (°F / °C)	131/55	131/55	149/65
Minimum (°F / °C)	14/-10	14/-10	-4/-20
Service Life (hours)	40,000	40,000	100,000
Unit Dimensions - H x W x D (in. / mm)		8.19 x 8.21 x 4.15/208 x 209 x 105	
Cutout Dimensions - H x W (in. / mm)		6.97 x 6.97/177 x 177	
Weight (lb. / kg)		2.13/1.0	
TYPE 12 / IP54 EXHAUST GRILLES			
RAL 7035 Light Gray:			
Catalog Number	**HG0900404**	**HG0900404**	**HG0900404**
RAL 9011 Black:			
Catalog Number	**HG0900403**		
TYPE 12 / IP55 EXHAUST GRILLES			
RAL 7035 Light Gray:			
Catalog Number	**HG0900504**		
RAL 9011 Black:			
Catalog Number	**HG0900503**		
ACCESSORIES			
Replacement Filters:			
Type 12 / IP54 Catalog Number	**89134425R**	**89134425R**	**89134425R**
Type 12 / IP55 Catalog Number	**89136409R**	**89136409R**	**89136409R**
Thermostat Catalog Number	**TWR60**	**TWR60**	**TWR60**
Shroud Catalog Number		**HH09GS35001, HH09GS61001, HH09SS04001**	

HF09 70 CFM (119 m³/hr.) Side-Mount Filter Fans

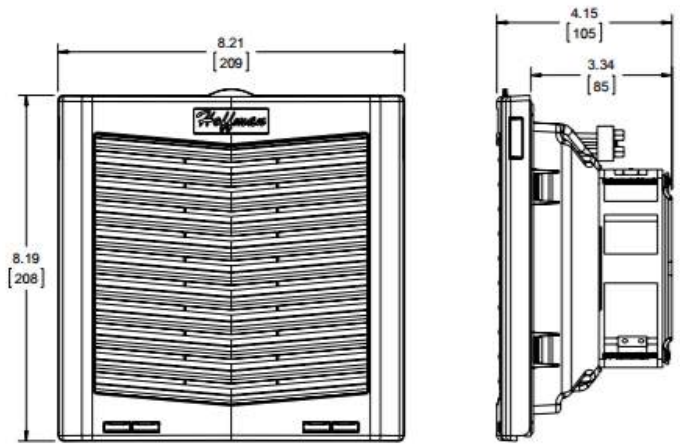

Exhaust Grille

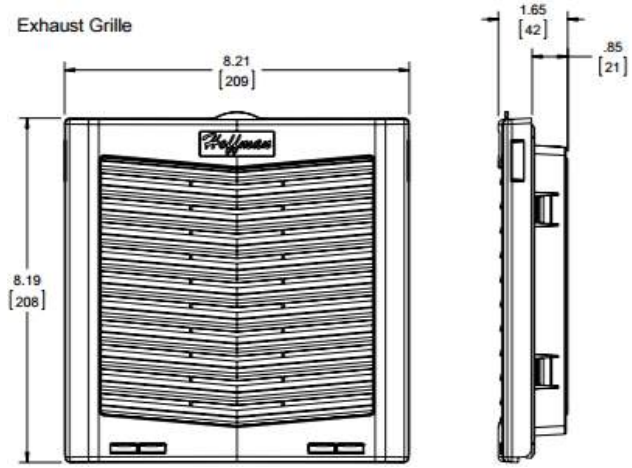

ELEMECH INC.
630-499-7080 · www.elemechinc.com

Rev: 0	Device Tag: FAN1		
Date: 8/20/2019			
Manuf.: . PNo: Hoffman: HG0900504	By: MBS	Job Number: EVC7838	Page # 1/1

FILTER FAN SHROUDS, TYPE 4/4X

nVent | HOFFMAN

11-035-925

INDUSTRY STANDARDS

Maintains UL/cUL Listed Type 4 and Type 4X rating when properly installed on a Type 4 or Type 4X enclosure.

UL 508A UL/cUL Listed; Type 4, 4X; File No. E482010

CE
EAC

FEATURES

- Protects filter fan and exhaust grill from standard washdown procedures
- Meets Type 4/4X standards when used with HF or TFP Type 12 Filter Fans and Grilles
- Hinge allows the shroud to be opened at a 45-degree angle for easy filter replacement
- Hinge design also allows for easy and complete removal for cleaning
- 10-degree, sloped top design
- Only reduces filter fan airflow by 10 percent
- Easy one person installation with simple back panel mounting; hardware included
- FDA approved blue silicone gasket that is easily replaceable
- Pre-drilled side holes allow for locking provision on side

Performance Data

HH05 Models			
Catalog Number	HH05MS35004	HH05MS61004	HH05SS04004X
Provides protection for:			
HF Filter Fan Models	HF04 and HF05	HF04 and HF05	HF04 and HF05
HG Exhaust Grille Models	HG04 and HG05	HG04 and HG05	HG04 and HG05
TFP Side-Mount Fans	TFP41UL12, TFP42UL12	TFP41UL12, TFP42UL12	TFP41UL12, TFP42UL12
Unit Construction			
Material	Mild Steel	Mild Steel	Stainless Steel #304
Finish	RAL 7035 polyester powder coat paint	ANSI 61 polyester powder coated paint	Brushed
Unit Dimensions H x W x D (in./mm)	12.33 x 7.70 x 3.40 313 x 196 x 86	12.33 x 7.70 x 3.40 313 x 196 x 86	12.33 x 7.70 x 3.40 313 x 196 x 86
HH09 Models			
Catalog Number	HH09MS35004	HH09MS61004	HH09SS04004X
Provides protection for:			
HF Filter Fan Models	HF09	HF09	HF09
HG Exhaust Grille Models	HG09	HG09	HG09
Unit Construction			
Material	Mild Steel	Mild Steel	Stainless Steel #304
Finish	RAL 7035 polyester powder coat paint	ANSI 61 polyester powder coated paint	Brushed
Unit Dimensions H x W x D (in./mm)	14.58 x 9.70 x 4.60 370 x 246 x 117	14.58 x 9.70 x 4.60 370 x 246 x 117	14.58 x 9.70 x 4.60 370 x 246 x 117
HH10 Models			
Catalog Number	HH10MS35004	HH10MS61004	HH10SS04004X
Provides protection for:			
HF Filter Fan Models	HF10	HF10	HF10
HG Exhaust Grille Models	HG10	HG10	HG10
TFP Side-Mount Fans	TFP61UL12, TFP62UL12	TFP61UL12, TFP62UL12	TFP61UL12, TFP62UL12
Unit Construction			
Material	Mild Steel	Mild Steel	Stainless Steel #304
Finish	RAL 7035 polyester powder coat paint	ANSI 61 polyester powder coated paint	Brushed
Unit Dimensions H x W x D (in./mm)	16.66 x 11.90 x 5.20 423 x 302 x 132	16.66 x 11.90 x 5.20 423 x 302 x 132	16.66 x 11.90 x 5.20 423 x 302 x 132
HH13 Models			
Catalog Number	HH13MS35004	HH13MS61004	HH13SS04004X
Provides protection for:			
HF Filter Fan Models	HF13	HF13	HF13
HG Exhaust Grille Models	HG13	HG13	HG13
TFP Side-Mount Fans	TFP101UL12, TFP102UL12	TFP101UL12, TFP102UL12	TFP101UL12, TFP102UL12
Unit Construction			
Material	Mild Steel	Mild Steel	Stainless Steel #304
Finish	RAL 7035 polyester powder coat paint	ANSI 61 polyester powder coated paint	Brushed
Unit Dimensions H x W x D (in./mm)	19.50 x 14.30 x 6.10 495 x 363 x 155	19.50 x 14.30 x 6.10 495 x 363 x 155	19.50 x 14.30 x 6.10 495 x 363 x 155

Blackburn

15-011-000

Copper Connectors
T&B Catalog Number: L70
UPC Number: 78378613002
Status: Active
Description:

Type L - Copper Single Conductor, One-Hole Mount for Conductor Range 14 Sol.-4 Str.

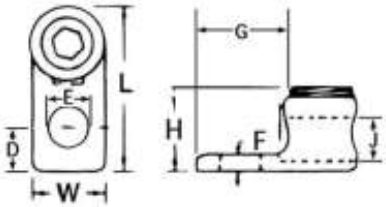

Features

	Cold forged from pure electrolytic copper with 99 percent conductivity.

General

Style	Type L - Copper Single Conductor, One-Hole Mount
Material	Copper
Wire Range	14 Sol.-4 Str.

Dimension Information

Length (inches)	1 1/8
Width (inches)	17/32
Height (inches)	35/64
D (inches)	9/32
E (inches)	9/32
F (inches)	3/32
G (inches)	21/32
J (inches)	9/32

Packaging

T&B Inner Pack	100
Package in Units	1000
T&B Sold in UOM	Each
T&B Weight Per UOM	3.32 lbs. per 100

Notes

	Available with screwdriver slot head screws only.
	UL 486A tested.

Certifications

RoHS Compliance	Yes

Certifications

File Nbr:
E9809

For further technical assistance, please contact us...

Thomas & Betts - USA
8155 T&B Blvd.
Memphis, TN 38125
www.tnb.com

T&B Technical Support
MS 3B-50
8155 T&B Blvd.
Memphis, TN 38125

Hours: 7AM - 6PM CDT
Monday-Friday
Phone: (888) 862-3289
Fax: (901) 252-1321
Email:techsupport@tnb.com

Totally Sealed Hour Meter

Redington

16-052-005

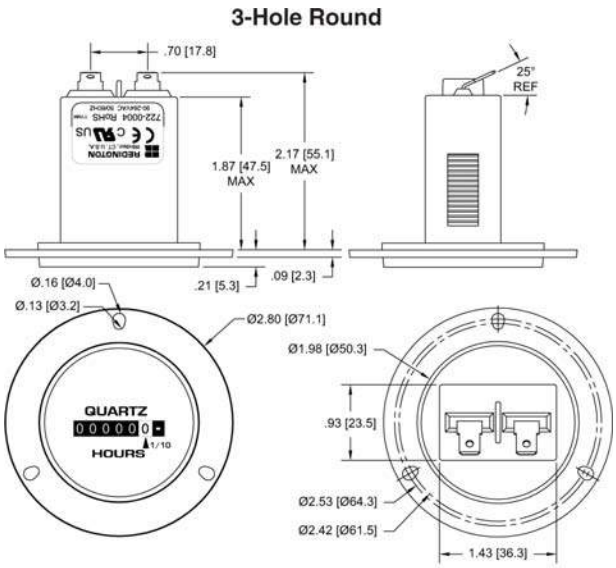

Panel Opening: 2.0" [50.6]

Models	Description
722-0001	2-Hole Rectangular, 90-264VAC 50/60Hz, ¼" [6.3mm] spade terminals, hours & 1/10's
722-0002	Flush-Rectangular, 90-264VAC 50/60Hz, ¼" [6.3mm] spade terminals, hours & 1/10's
722-0003	Flush-Round, 90-264VAC 50/60Hz, ¼" [6.3mm] spade terminals, hours & 1/10's
722-0004	3-Hole Round, 90-264VAC 50/60Hz, ¼" [6.3mm] spade terminals, hours & 1/10's
5003-009	NEMA 4X, 12 Gasket for Model 722-0002
5003-010	NEMA 4X, 12 Gasket for Model 722-0001
5003-011	NEMA 4X, 12 Gasket for Model 722-0004
5003-012	NEMA 4X, 12 Gasket for Model 722-0003

Description

The Redington Model 722 provides an AC Hour Meter with an operating range of 90-264VAC 50/60 Hz. You no longer require two separate meters, one for 115VAC and one for 230VAC. Models are available in the standard industry housings, 2-Hole Rectangular, Flush-Rectangular, Flush-Round and 3-Hole Round. Its quartz time base insures accurate long-term time keeping. The Totally Sealed case protects against the environment and provides years of reliable service. All models are NEMA 4X,12 rated when mounted with optional gasket.

Specifications

Figures:	6 - digits, 0.14" [3.6mm] 99999.9 Hours and idicator - white on black Decimal - black on white
Reset:	Non-reset
Voltage:	90-264VAC
Frequency:	50/60Hz
Power:	1 watt max.
Mounting:	Clip or mounting holes
Termination:	¼" [6.3mm] spade terminals
Weight:	~2 oz [57 g]
Accuracy:	± 0.02% over entire range
Case Material:	Black polymer
Lens Material:	Polymer
Agency Approvals:	UL/cUL Recognized, CE & RoHS Compliant, SAE & NEMA 4X, 12 Compliant
Environmental:	Totally Sealed
Front Panel:	NEMA 4X, 12 rated with optional gasket
Temperature:	-40°F to +185°F [-40°C to + 85°C]
Humidity:	95% (SAE J1378)
Vibration:	10-80 Hz. 20g max. (SAE J1378)
Shock:	55g @ 9 - 13msec (SAE J1378)

ELEMECH INC.
630-499-7080 · www.elemechinc.com

Rev: 0	Device Tag: HM1,2		
Date: 8/20/2019			
Manuf.: . PNo: Redington: 722-0004	By: MBS	Job Number: EVC7838	Page # 1/1

Flexible Heaters

17-451-000

Flexible Heater Installation Methods

Flexible Heater Pressure Sensitive Adhesive (PSA)

PSA

For ease of attachment specify PSA. Installation is simple: just peel off the protective liner and apply. It will adhere to most clean smooth surfaces. Care must be taken when installing to attain a smooth, consistent, uniform bond to achieve maximum results.

Maximum Temperature:
Continuous – 300°F (149°C)
Intermittent – 500°F (260°C)

Recommended Watt Density:
Under 5 W/in² (0.78 W/cm²)

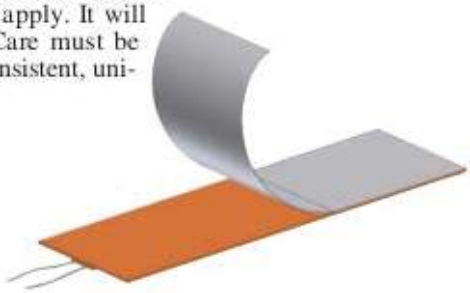

PSA Plus

A layer of aluminum foil is vulcanized to the back of the heater for added heat dissipation prior to the application of PSA.

UL Recognized: U.S. & Canada E65652

CSA Certified: 043099

Tempco PN: **SHS80707**
SILICONE RUBBER HEATER
3.000" W x 5.000" L
12" Teflon® leads in location A
Wire construction
Pressure sensitive adhesive
75 watts, 120 volts

Tempco PN: **SHS80708**
SILICONE RUBBER HEATER
4.500" W x 6.500" L
12" Teflon® leads in location A
Wire construction
Pressure sensitive adhesive
150 watts, 120 volts

ELEMECH INC. 630-499-7080 · www.elemechinc.com	Rev: 0	Device Tag: HTR1	
	Date: 8/20/2019		
Manuf.: . PNo: Tempco: SHS80707	By: MBS	Job Number: EVC7838	Page # 1/1

30.5 mm Push Buttons

Pilot Lights

Allen-Bradley

32-005-048

800 T ___ – P T ___ 16 G
a b c d e f g

a

Protection Rating	
Code	Description
T	Metal, Type 4/13
H	Plastic, Type 4/4X/13

c

Power Module Type		
800T Type 4/13	Description	800H Type 4/4X/13
Code		Code
P	Transformer (or dual input)	PR
Q	Full voltage/ Universal	QR

d

Lamp Test Options	
Code	Description
Blank	No test option
T	Push-to-test
D	Dual input — diode♣
DT	Dual input — transformer relay
Note: Push-to-test supplied with factory jumpered contact block.	

e

Illumination Options	
Code	Description
Blank	Incandescent
H	LED*

f

Voltage	
Transformer	
Code	Description
16	120V AC 50/60 Hz
26	240V AC 50/60 Hz
46	480V AC 50/60 Hz
56	600V AC 50/60 Hz
Full Voltage — Incandescent	
12	12V AC/DC
24	24V AC/DC
48	48V AC/DC
10	120V AC/DC
20	240V AC/DC
Universal — LED	
2	12…130V AC/DC
Dual Input	
16	120V AC
24	24V AC/DC (Dual input diode only)

g

Lens Color		
Code	Color	Glass Code ▲
Blank	No lens	Blank
A	Amber	D
B	Blue	E
C	Clear	F
G	Green	H
R	Red	J
W	White	K

Specifications*

Electrical Ratings		
Contact ratings		Refer to the contact ratings tables on page 10-4.
Dielectric strength		2200V for one minute, 1300V for one minute (Logic Reed)
Electrical design life cycles		1 000 000 at max. rated load, 200 000 at max. rated load (Logic Reed)
Mechanical Ratings		
Vibration		10…2000 Hz, 1.52 mm displacement (peak-to-peak) max./ 10 G max. (except Logic Reed)
Shock		1/2 cycle sine wave for 11 ms ≥ 25 G (contact fragility) and no damage at 100 G
Degree of protection		Type 1/4/12/13 (800T); Type 1/4/4X/12/13 (800H); EN/IEC 60529 IP66/65
Mechanical design life cycles		
Push buttons	(Momentary, non-illuminated)	10 000 000 min.
	(Momentary, illuminated)	250 000 min.
	(Push-pull/twist-to-release)	250 000 min.
Selector switches	(Non-illuminated)	1 000 000 min.
	(Illuminated, key-operated)	200 000 min.
Potentiometers		25 000 min.
All other devices		200 000 min.
Contact operation		Shallow, mini, and low-voltage contact blocks: Slow, double make and break Logic Reed and sealed switch contact blocks: Single break magnetic
Wire gauge/Terminal screw torque		#18…14 AWG (#18…10 Max Duty) / 6…8 lb•in
Typical operating forces Operators without contact blocks		Flush, extended button, standard mushroom, jumbo plastic mushroom: 2 lbs max. Jumbo and extended aluminum mushroom head: 3.95 lbs max. Maintained selector switch: 3.6 in•lb max.
Spring return selector switches		3.6 in•lb to stop, 0.2 in•lb to return
Illuminated push buttons and push-to-test pilot lights		5 lb max.
2-position push-pull		8.0 lb max. push or pull
3-position push-pull		8 lb max. push to in position or pull to center position (15 lb max. pull to out position)
Twist-to-release or push-pull		9 lbs max. push or pull 30 in•oz max. twist, 6 in•oz minimum return
Potentiometer		Rotational torque 3…12 in•oz; stopping torque 12 in•lb (minimum)
Contact blocks	Standard	1 lb
	Logic Reed	1 lb max.
	Sealed switch	3 lb max. at 0.205 in. plunger travel
	Stackable sealed switch	1 lb max.
	MaxDuty	1.4 lb max.
	PenTUFF	1.4 lb max.
	Self Monitoring	1.6 lb
Environment		
Temperature range	Operating	-40…+131 °F (-40…+55 °C)
	Storage	-40…+185 °F (-40…+85 °C)
Note: Operating temperatures below freezing are based on the absence of moisture and liquids. Consult your local Rockwell Automation sales office or Allen-Bradley distributor for use in lower temperature applications.		
Humidity		50…95% RH from 77…140 °F (25…60 °C) per Procedure IV of MIL-STD-810C, Method 507.1 cycling test

ELEMECH INC. 630-499-7080 · www.elemechinc.com	Rev: 0	Device Tag: LT1,3,6-8
	Date: 8/20/2019	
Manuf.: . PNo: Allen-Bradley: 800H-PR16	By: MBS	Job Number: EVC7838
		Page # 1/1

Replacement Color Caps

30.5 mm Accessories

Allen-Bradley

32-005-044

Color	800T/H Pilot Light Color Caps		
	Standard*	Push-to-Test*	18 mm
	Cat. No.	Cat. No.	Cat. No.
Amber	**800T-N26A**	**800T-N42**	**800T-N122A**
Blue	**800T-N26B**	**800T-N43**	**800T-N122B**
Clear	**800T-N26C**	**800T-N45**	800T-N122C
Green	**800T-N26G**	**800T-N41**	**800T-N122G**
Red	**800T-N26R**	**800T-N40**	**800T-N122R**
White	**800T-N26W**	**800T-N44**	**800T-N122W**

Bulletin 800T/H

30.5 mm Push Buttons

Emergency Stop Operators

Allen-Bradley

29-005-117

2-Position Red Trigger Action Twist-to-Release, Non-Illuminated

- Tamper resistant – front-of-panel mounting and non-removable operator head
- Compliant with global E-stop standards, including EN ISO 13850 and EN 60947-5-5

Cat. No. 800T-TFXJET6

Cat. No. 800T-TFXLET6

Cat. No. 800T-TFXK6

Cat. No. 800H-TFRXT6

	Operator Position		Type 4/13			Type 4/4X/13
			45 mm Plastic	63 mm Metal	Key Release	45 mm Plastic
Contact Type	Out	In	Cat. No.∗❄‡	Cat. No.∗§	Cat. No.∗♣	Cat. No.∗❄‡
No contacts	—	—	**800T-TFXT6**	**800T-TFXLT6**	**800T-TFXK6**	**800H-TFRXT6**
1 N.C.	X	O	800T-TFXT6D2	800T-TFXLTD2	800T-TFXK6D2	800H-TFRXT6D2
1 N.O. - 1 N.C.	O X	X O	**800T-TFXT6A**	800T-TFXLT6A	**800T-TFXK6A**	**800H-TFRXT6A**
1 S.M.C.B.➤	X	O	800TC-TFXT6D4S	800TC-TFXLT6D4S	800TC-TFXK6D4S	800HC-TFRXT6D4S

∗ For finger-safe contact block terminals, add a **C** to the cat. no. Example: Cat. No. 800T**C**-TFXT6 or 800H**C**-TFRXT6.
❄ To order a device with a jumbo (60 mm) plastic head add the letter **J** after **X**. Example: Cat. No. 800T-TFX**J**T6A or 800H-TFRX**J**T6A.
‡ To order a jumbo head device with "E-STOP" printed on the cap add the letters **JE** after **X.** Example: Cat. No. 800T-TFX**JE**T6 or 800H-TFRX**JE**T6.
§ To order a device with "E-STOP" engraved on the cap add the letter **E** after **L.** Example: Cat. No. 800TC-TFXL**E**T6D4S.
♣ Provided with two DO18 keys.
➤ Self-monitoring contact block.

Standards Compliance

UL 508

CCC

Certifications

UL Listed
(File No. E14840, E10314
Guide No. NKCR, NOIV)

CSA Certified
(File No. LR1234, LR11924)

CSA C22.2, No. 14

EN/IEC: 60947-5-1

800	T		– T	FX	T	6	D2
	a	*b*		*c*	*d*		*e*

a

Protection Rating	
Code	Description
T	Metal, Type 4/13
H	Plastic, Type 4/4X/13

b

Finger-Safe Guards	
Code	Description
Blank	No guards
C	Guards on terminals

c

800T Type 4/13 Code	Description	800H Type 4/4X/13 Code
FX	Standard (45 mm) mushroom head	FRX
FXJ	Jumbo (60 mm) mushroom head	FRXJ
FXJE	Jumbo (60 mm) mushroom head with "E-STOP"	FRXJE
FXK	45 mm mushroom head key release	—
FXL	63 mm anodized aluminum head	—
FXLE	63 mm anodized aluminum head with "E-STOP"	—

d

Release Function	
Code	Color
Blank	Key release⌘
T	Twise release

Note: X = Closed/O = Open
⌘Configurable only with **FXK** head type.

e

Contact Block(s)			
Code	Operator Position Out	Operator Position In	Description
Blank	—	—	No contacts on operator
Standard			
D1	O	X	1 N.O.
D2	X	O	1 N.C.
D4	X	O	1 N.C.L.B.
A	O X	X O	1 N.O. - 1 N.C.
A1	O X	X O	1 N.O. - 1 N.C.L.B.
A5	X X	O O	2 N.C.L.B.
Pen*TUFF* (Low Voltage)			
D1V	O	X	1 N.O.
D2V	X	O	1 N.C.
D4V	X	O	1 N.C.L.B.
AV	O X	X O	1 N.O. - 1 N.C.
Class 1, Div. 2/Zone 2			
Logic Reed			
D1R	O	X	1 N.O.
D2R	X	O	1 N.C.
AR	O X	X O	1 N.O. - 1 N.C.
Sealed Switch			
D1P	O	X	1 N.O.
D2P	X	O	1 N.C.
AP	O X	X O	1 N.O. 1 N.C.
Stackable Sealed Switch			
D1Y	O	X	1 N.O.
D2Y	X	O	1 N.C.
AY	O X	X O	1 N.O. - 1 N.C.

30.5 mm Push Buttons

Allen-Bradley

02-005-002

Shallow Block

PenTUFF™ (Low Voltage) Contact Block

Logic Reed Block

Sealed Switch Block

Stackable Sealed Switch Block

Contact Type	Shallow Block∗❄		PenTUFF (Low Voltage) Block∗❄		Logic Reed Block‡		Sealed Switch Block‡		Stackable Sealed Switch Block‡	
	Cat. No.	Code	Cat. No.	Code	Cat. No.	Code	Cat. No.	Code	Cat. No.	Code
1 N.O.	**800T-XD1**	D	**800T-XD1V**	H	**800T-XD1R**	V	**800T-XD1P**	R	**800T-XD1Y**	5
1 N.C.	**800T-XD2**	E	**800T-XD2V**	U	**800T-XD2R**	W	**800T-XD2P**	S	**800T-XD2Y**	6
1 N.O.E.M.	**800T-XD3**	G	**800T-XD3V**	I	—	—	—	—	—	—
1 N.C.L.B.	**800T-XD4**	J	**800T-XD4V**	Q	—	—	—	—	—	—
1 N.O. - N.C.	**800T-XA**	A	**800T-XAV**	F	**800T-XAR**	T	**800T-XAP**	P	**800T-XAY**	7
2 N.O.	**800T-XA2§**	M	—	—	**800T-XA2R§**	Y	—	—	**800T-XA2Y**	8
2 N.C.	**800T-XA4**	N	—	—	**800T-XA4R**	Z	—	—	**800T-XA4Y**	9
1 N.C.L.B. - 1 N.O.	**800T-XA1**	B	—	—	—	—	—	—	—	—
1 N.C.L.B. - 1 N.C.	**800T-XA7**	C	—	—	—	—	—	—	—	—

Note: Modular suffix codes can be used when specifying selector switches with multiple contact blocks.

Pen*TUFF*™ (Low Voltage) Contact Ratings

Minimum DC: 5V, 1 mA
Maximum thermal continuous current I_{th} 2.5 A AC/1.0 A DC. Bulletin 800T units with 800T-XAV contacts have ratings as follows:

Max. Opertnl. Volts U_e	Utilization Category		Rated Operational Currents		
	IEC	NEMA	Volts U_e	Make	Break
AC 300	AC-15	C300	120...300 0...120	1800VA 15 A	180VA 1.5 A
DC 150	DC-13	R150	24...150 0...24	28VA 1.0 A	

Stackable Sealed Switch Contact Ratings

Minimum: 5V, 10 mA (digital); 24V, 1 mA (analog)

Maximum continuous current I_{th} 2.5 A. Bulletin 800T units have control circuit ratings with sealed switch contact blocks as follows:

Max. Opertnl. Volts U_e	Utilization Category		Rated Operational Currents		
	IEC	NEMA	Volts U_e	Make	Break
AC 300	AC-15	C300	120...300 0...120	1800VA 15 A	180VA 1.5 A
DC 150	DC-13	Q150	24...150 0...24	69VA 2.5 A	

MaxDuty Contact Rating

Maximum thermal continuous current I_{th} 24 A.
Pilot Duty — 120V AC, 12 A; 24V DC, 10 A
Motor Ratings — 120V AC, 1.5 Hp; 240V AC, 3 Hp; 24V DC, 10 A FLA/60 A LRA

Logic Reed Contact Ratings

Minimum — DC: 5V, 1 mA
Maximum — DC: 30V, 0.06 A, AC: 150V, 0.15 A
Should only be used with resistive loads.

Product Certifications

Certifications	UR/UL, CSA, CCC, CE
Standards Compliance — CE Marked	NEMA ICS-5; UL 508, EN ISO 13850, EN 60947-1, EN 60947-5-1, EN 60947-5-5

30.5 mm Push Buttons

Allen-Bradley

29-005-002

800 T – A 1 A

a b c d e f

a

Protection Rating	
Code	Description
T	Metal, Type 4/13
H	Plastic, Type 4/4X/13

b

Finger-Safe Guards	
Code	Description
Blank	No guards
C	Guards on terminals

c

Operator Type		
800T Type 4/13	Description	800H Type 4/4X/13
Code		Code
A	Flush head	AR
B	Extended head	BR
D	Mushroom head	DR
DX	Mushroom head less color cap	DRX
—	Bootless guarded head	GR
—	Booted head	R*

d

Color Cap	
Code	Description
Blank	Used only when ordering Operator Type DX/DRX
1	Green
2	Black
3	Orange❄

Color Cap	
Code	Description
4	Grey❄
5	White❄
6	Red
7	Blue
9	Yellow

e

Special Mushroom Head	
Code	Description
J§	Jumbo mushroom head — plastic
L§	Jumbo mushroom head — metal

Note: Special mushroom head options only apply to mushroom head operator type code D/DR (Table c).

f

Contact Block(s)	
Code	Description
Blank	No contacts
Standard	
D1	1 N.O.
D2	1 N.C.
D3	1 N.O.E.M.
D4	1 N.C.L.B.
D5	1 N.O. (Mini)
D6	1 N.C. (Mini)
A1	1 N.C.L.B. - 1 N.O.
A2	2 N.O.‡
A4	2 N.C.
A7	1 N.C.L.B. - 1 N.C.
A	1 N.O. - 1 N.C.
B	2 N.O. - 2 N.C.

Certifications

UL Listed
(File No. E14840, E10314
Guide No. NKCR, NOIV)

CSA Certified
(File No. LR1234, LR11924)

CSA C22.2, No. 14

Specifications*

Electrical Ratings		
Contact ratings		Refer to the contact ratings tables on page 10-4.
Dielectric strength		2200V for one minute, 1300V for one minute (Logic Reed)
Electrical design life cycles		1 000 000 at max. rated load, 200 000 at max. rated load (Logic Reed)
Mechanical Ratings		
Vibration		10…2000 Hz, 1.52 mm displacement (peak-to-peak) max./ 10 G max. (except Logic Reed)
Shock		1/2 cycle sine wave for 11 ms ≥ 25 G (contact fragility) and no damage at 100 G
Degree of protection		Type 1/4/12/13 (800T); Type 1/4/4X/12/13 (800H); EN/IEC 60529 IP66/65
Mechanical design life cycles		
Push buttons	(Momentary, non-illuminated)	10 000 000 min.
	(Momentary, illuminated)	250 000 min.
	(Push-pull/twist-to-release)	250 000 min.
Selector switches	(Non-illuminated)	1 000 000 min.
	(Illuminated, key-operated)	200 000 min.
Potentiometers		25 000 min.
All other devices		200 000 min.
Contact operation		Shallow, mini, and low-voltage contact blocks: Slow, double make and break Logic Reed and sealed switch contact blocks: Single break magnetic
Wire gauge/Terminal screw torque		#18…14 AWG (#18…10 Max Duty) / 6…8 lb•in
Typical operating forces Operators without contact blocks		Flush, extended button, standard mushroom, jumbo plastic mushroom: 2 lbs max. Jumbo and extended aluminum mushroom head: 3.95 lbs max. Maintained selector switch: 3.6 in•lb max.
Spring return selector switches		3.6 in•lb to stop, 0.2 in•lb to return
Illuminated push buttons and push-to-test pilot lights		5 lb max.
2-position push-pull		8.0 lb max. push or pull
3-position push-pull		8 lb max. push to in position or pull to center position (15 lb max. pull to out position)
Twist-to-release or push-pull		9 lbs max. push or pull 30 in•oz max. twist, 6 in•oz minimum return
Potentiometer		Rotational torque 3…12 in•oz; stopping torque 12 in•lb (minimum)
Contact blocks	Standard	1 lb
	Logic Reed	1 lb max.
	Sealed switch	3 lb max. at 0.205 in. plunger travel
	Stackable sealed switch	1 lb max.
	MaxDuty	1.4 lb max.
	PenTUFF	1.4 lb max.
	Self Monitoring	1.6 lb
Environment		
Temperature range	Operating	-40…+131 °F (-40…+55 °C)
	Storage	-40…+185 °F (-40…+85 °C)
Note: Operating temperatures below freezing are based on the absence of moisture and liquids. Consult your local Rockwell Automation sales office or Allen-Bradley distributor for use in lower temperature applications.		
Humidity		50…95% RH from 77…140 °F (25…60 °C) per Procedure IV of MIL-STD-810C, Method 507.1 cycling test

ELEMECH INC.
630-499-7080 · www.elemechinc.com

Rev: 0	Device Tag: PB2,3		
Date: 8/20/2019			
Manuf.: . PNo: Allen-Bradley: 800H-AR2D1	By: MBS	Job Number: EVC7838	Page # 1/1

Telemecanique

Zelio® Logic 2

Programmable Smart Relays

33-183-003

Supply voltage	via SR3 B●●1FU (∼ 100…240 V)
Number and type of I/O	Discrete inputs/outputs: 6, 10 and 14
Number and type of inputs	Discrete inputs: 4, 6 and 8
Number and type of outputs	Relay outputs: 2, 4 and 6
Programming software	"Zelio Soft 2" **SR2 SFT01** (see page 22)

Mounting on 35 mm ⊓⊔ rail

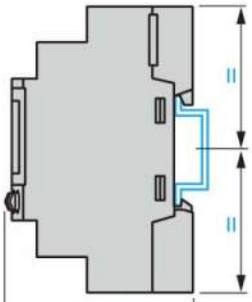

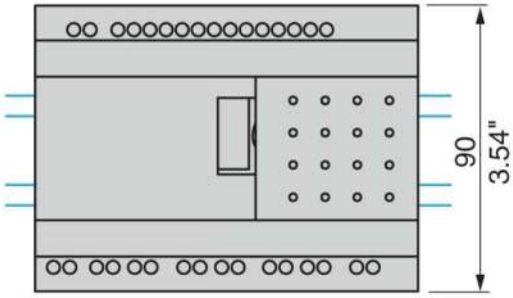

Screw mounting (retractable lugs)

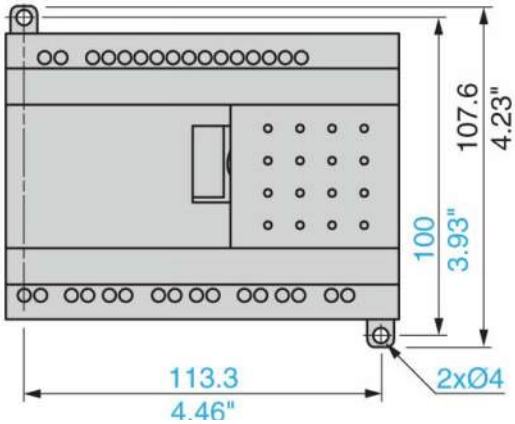

∼ 100 to 240 V supply characteristics

Smart relay type			SR3 B261FU
Primary	Nominal voltage	**V**	100 to 240
Voltage limits		**V**	85 to 264
Nominal input current	Without extensions	**mA**	100/50
	With extensions	**mA**	80/60
Power dissipated	Without extensions	**VA**	12
	With extensions	**VA**	17
Micro-breaks	Permissible duration	**ms**	10
rms insulation voltage		**V**	1780

Relay output characteristics

Telemecanique

33-183-003

Smart relay type				SR3 B261●●
Operating limit values			V	⎓ 5 to 150 ∿ 24 to 250
Contact type				N/O
Thermal current			A	8 outputs: 8 A 2 outputs: 5 A
Electrical durability for 500 000 operating cycles	Utilization category	DC-12	V	24
			A	1.5
		DC-13	V	24 (L/R = 10 ms)
			A	0.6
		AC-12	V	230
			A	1.5
		AC-15	V	230
			A	0.9
Minimum switching capacity	At minimum voltage of 12 V		mA	10
Low power switching reliability of contact				12 V - 10 mA
Maximum operating rate	No-load		Hz	10
	At Ie (operational current)		Hz	0.1
Mechanical life	In millions of operating cycles			10
Rated impulse withstand voltage (Uimp)	Conforming to IEC/EN 60947-1 and IEC/EN 60664-1		kV	4
Response time	Trip		ms	10
	Reset		ms	5
Built-in protection	Against short-circuits			None
	Against overvoltage and overload			None

Discrete ∿ input characteristics

Smart relay type				SR● ●●●●FU
Nominal value of inputs	Voltage		V	100 to 240
	Current		mA	0.6
	Frequency		Hz	47 to 63
Input switching limit values	At state 1	Voltage	V	⩾ 79
		Current	mA	> 0.17
	At state 0	Voltage	V	⩽ 40
		Current	mA	< 0.5
Input impedance at state 1			kΩ	350
Configurable response time	State 0 to 1 (50/60 Hz)		ms	50
	State 1 to 0 (50/60 Hz)		ms	50
Isolation	Between supply and inputs			None
	Between inputs			None
Protection	Reverse polarity protection			Control instructions not executed

30.5 mm Push Buttons
Selector Switches

Allen-Bradley

39-005-009

800	T		–	J	2		C
	a	b		c	d	e	f

a

Protection Rating	
Code	Description
T	Metal, Type 4/13
H	Plastic, Type 4/4X/13

b

Finger-Safe Guards	
Code	Description
Blank	No guards
C	Guards on terminals

c

Knob Insert Colors		
800T Type 4/13	Description	800H Type 4/4X/13
Code		Code
J	White	JR
JX	Packet of colored inserts*	JRX
Metal Wing Lever Colors❄		
Code	Color	Code
JA	Red	—
JG	Grey	—

d

Knob/Lever Type Operators	
Standard Knob	
Code	Operator Function
2	Maintained
4	Spring return from left
5	Spring return from right
91	Spring return from both
Knob Lever❄	
Code	Operator Function
17	Maintained
18	Spring return from left
19	Spring return from right
20	Spring return from both
Metal Wing Lever❄	
Code	Operator Function
11	Maintained
15	Spring return from left
16	Spring return from right
141	Spring return from both
Coin Slot❄	
Code	Operator Function
10	Spring return from both

e

Cam Option‡♣	
Code	Description
Blank	KB7 cam (std.)
KA1	KA1 cam
KA7	KA7 cam

e (cont'd)

Cam Option‡♣	
Code	Description
KC1	KC1 cam
KC7	KC7 cam
KD7	KD7 cam
KE7§	KE7 cam
KQ1	KQ1 cam
KQ7	KQ7 cam
KR1§	KR1 cam
KR7§	KR7 cam
KT1§	KT1 cam
KT7§	KT7 cam
KU7§	KU7 cam

f

Contact Blocks	
Code	Description
Blank	No contacts on operator
Standard	
A	1 N.O. - 1 N.C. 1-**800T-XA** on white side
B	2 N.O. - 2 N.C. 2-**800T-XA**s — 1 on white side/1 on black side
PenTUFF (Low Voltage)	
AV	1 N.O. - 1 N.C. 1-**800T-XAV** on white side
BV	2 N.O. - 2 N.C. 2-**800T-XAV**s — 1 on white side/1 on black side

f (cont'd)

Contact Blocks♣	
Code	Description
Blank	No contacts
Class 1, Div. 2/Zone 2	
Logic Reed	
AR	1 N.O. - 1 N.C. 1-**800T-XAR** on white side
BR	2 N.O. - 2 N.C. 2-**800T-XAR**s — 1 on white side/1 on black side
Sealed Switch	
AP	1 N.O. - 1 N.C. 1-**800T-XAP** on white side
BP	2 N.O. - 2 N.C. 2-**800T-XAP**s — 1 on white side/1 on black side
Stackable Sealed Switch	
AY	1 N.O. - 1 N.C. 1-**800T-XAY** on white side
BY	2 N.O. - 2 N.C. 2-**800T-XAY**s — 1 on white side/1 on black side

* One insert of each color (blue, green, orange, red, and yellow).
❄ Only available on Bul. 800T, Type 4/13 operators.
‡ If an overlapping cam is required, consult your local distributor.
§ Not available with wing levers.
♣ See Table 1 for cam selections and associated targets.

Specifications*

Electrical Ratings		
Contact ratings		Refer to the contact ratings tables on page 10-4.
Dielectric strength		2200V for one minute, 1300V for one minute (Logic Reed)
Electrical design life cycles		1 000 000 at max. rated load, 200 000 at max. rated load (Logic Reed)
Mechanical Ratings		
Vibration		10…2000 Hz, 1.52 mm displacement (peak-to-peak) max./ 10 G max. (except Logic Reed)
Shock		1/2 cycle sine wave for 11 ms ≥ 25 G (contact fragility) and no damage at 100 G
Degree of protection		Type 1/4/12/13 (800T); Type 1/4/4X/12/13 (800H); EN/IEC 60529 IP66/65
Mechanical design life cycles		
Push buttons	(Momentary, non-illuminated)	10 000 000 min.
	(Momentary, illuminated)	250 000 min.
	(Push-pull/twist-to-release)	250 000 min.
Selector switches	(Non-illuminated)	1 000 000 min.
	(Illuminated, key-operated)	200 000 min.
Potentiometers		25 000 min.
All other devices		200 000 min.
Contact operation		Shallow, mini, and low-voltage contact blocks: Slow, double make and break Logic Reed and sealed switch contact blocks: Single break magnetic
Wire gauge/Terminal screw torque		#18…14 AWG (#18…10 Max Duty) / 6…8 lb•in
Typical operating forces Operators without contact blocks		Flush, extended button, standard mushroom, jumbo plastic mushroom: 2 lbs max. Jumbo and extended aluminum mushroom head: 3.95 lbs max. Maintained selector switch: 3.6 in•lb max.
Spring return selector switches		3.6 in•lb to stop, 0.2 in•lb to return
Illuminated push buttons and push-to-test pilot lights		5 lb max.
2-position push-pull		8.0 lb max. push or pull
3-position push-pull		8 lb max. push to in position or pull to center position (15 lb max. pull to out position)
Twist-to-release or push-pull		9 lbs max. push or pull 30 in•oz max. twist, 6 in•oz minimum return
Potentiometer		Rotational torque 3…12 in•oz; stopping torque 12 in•lb (minimum)
Contact blocks	Standard	1 lb
	Logic Reed	1 lb max.
	Sealed switch	3 lb max. at 0.205 in. plunger travel
	Stackable sealed switch	1 lb max.
	MaxDuty	1.4 lb max.
	PenTUFF	1.4 lb max.
	Self Monitoring	1.6 lb
Environment		
Temperature range	Operating	-40…+131 °F (-40…+55 °C)
	Storage	-40…+185 °F (-40…+85 °C)
Note: Operating temperatures below freezing are based on the absence of moisture and liquids. Consult your local Rockwell Automation sales office or Allen-Bradley distributor for use in lower temperature applications.		
Humidity		50…95% RH from 77…140 °F (25…60 °C) per Procedure IV of MIL-STD-810C, Method 507.1 cycling test

Certifications

UL Listed
(File No. E14840, E10314
Guide No. NKCR, NOIV)

CSA Certified
(File No. LR1234, LR11924)

CSA C22.2, No. 14

ELEMECH INC.
630-499-7080 · www.elemechinc.com

Rev: 0	Device Tag: SS2		
Date: 8/20/2019			
Manuf.: . PNo: Allen-Bradley: 800H-JR2A	By: MBS	Job Number: EVC7838	Page # 1/1

Cutler-Hammer
Control Power Transformers

Cutler-Hammer
EATON

c UL us
LISTED

41-018-A070

Technical Data

Type	Epoxy encapsulated windings	Standards	ANSI/NEMA ST-1
Frequency	50/60 Hz		UL 506
Insulation	Class 105, 55°C temperature rise	Approvals	UL, file E46323
Terminals	Pressure plate		CSA, file LR27533

Primary: 240 x 480, 230 x 460, 220 x 440 with Jumpers
Secondary: 120/115/110 with Fuse Clips for 13/32 x 1-1/2 Fuses

VA	Dimensions (Inches)			Weight Lbs.	Dimensions (mm)			Weight kg	Wiring Diagram ①	Style Number
	Height	Width	Depth		Height	Width	Depth			
25	2-9/16	3	2-1/2	1.7	65	76	64	.8	1	C0025E2A
50	2-9/16	3	3	2.6	65	76	76	1.2	1	C0050E2A
75	2-9/16	3	3-1/2	3.5	65	76	89	1.6	1	C0075E2A
100	2-7/8	3-3/8	3-3/8	4.2	73	86	86	1.9	1	C0100E2A
150	3-3/16	3-3/4	4	6.7	81	95	102	3.0	1	C0150E2A
200	3-13/16	4-1/2	4	8.5	97	114	102	3.9	1	C0200E2A
250	3-13/16	4-1/2	4-3/8	10.0	97	114	111	4.5	1	C0250E2A
300	3-13/16	4-1/2	4-3/4	11.3	97	114	121	5.1	1	C0300E2A
350	3-13/16	4-1/2	5-1/4	13.6	97	114	133	6.2	1	C0350E2A
500	4-3/4	5-1/4	5-1/2	19.2	121	133	140	8.7	1	C0500E2A
750	4-3/4	5-1/4	7	28.1	121	133	178	12.8	1	C0750E2A
1000	5-11/16	6-3/4	6-7/16	29.5	144	171	164	13.4	1	C1000E2A
1500	6-3/8	7-1/2	7-3/8	40.0	162	191	187	18.1	1	C1500E2A

Primary: 240 x 480 with Jumpers
Secondary: 24 with Fuse Clips for 13/32 x 1-1/2 Fuses (through 500 VA)

VA	Dimensions (Inches)			Weight Lbs.	Dimensions (mm)			Weight kg	Wiring Diagram ①	Style Number
	Height	Width	Depth		Height	Width	Depth			
50	2-9/16	3	3	2.7	65	76	76	1.2	2	C0050E2B
75	2-9/16	3	3-1/2	3.5	65	76	89	1.6	2	C0075E2B
100	2-7/8	3-3/8	3-3/8	4.2	73	86	86	1.9	2	C0100E2B
150	3-3/16	3-3/4	4	6.7	81	95	102	3.0	2	C0150E2B
200	3-13/16	4-1/2	4	8.5	97	114	102	3.9	2	C0200E2B
250	3-13/16	4-1/2	4-3/8	10.1	97	114	111	4.6	2	C0250E2B
300	3-13/16	4-1/2	4-3/4	11.4	97	114	121	5.2	2	C0300E2B
350	3-13/16	4-1/2	5-1/4	13.4	97	114	133	6.1	2	C0350E2B
500	4-3/4	5-1/4	5-5/8	17.5	121	133	143	7.9	2	C0500E2B
750	4-3/4	5-1/4	7	28.1	121	133	178	12.8	2	C0750E2B

Primary: 240 x 480 with Jumpers
Secondary: 120 x 240 with Jumpers, Secondary Fuse Clips not Applicable

VA	Dimensions (Inches)			Weight Lbs.	Dimensions (mm)			Weight kg	Wiring Diagram ①	Style Number
	Height	Width	Depth		Height	Width	Depth			
50	2-9/16	3	3	2.6	65	76	76	1.2	11	C0050E2CXX
75	2-9/16	3	3-1/2	3.5	65	76	89	1.6	11	C0075E2CXX
100	2-7/8	3-3/8	3-3/8	4.2	73	86	86	1.9	11	C0100E2CXX
150	3-3/16	3-3/4	4	6.7	81	95	102	3.1	11	C0150E2CXX
200	3-13/16	4-1/2	4	8.5	97	114	102	3.9	11	C0200E2CXX
250	3-13/16	4-1/2	4-3/8	10.0	97	114	111	4.6	11	C0250E2CXX
300	3-13/16	4-1/2	4-7/8	11.8	97	114	124	5.4	11	C0300E2CXX
350	3-13/16	4-1/2	5-1/4	13.6	97	114	133	6.2	11	C0350E2CXX
500	4-3/4	5-1/4	5-1/4	17.5	121	133	133	8.0	11	C0500E2CXX
750	4-3/4	5-1/4	7	26.4	121	133	178	12.0	11	C0750E2CXX

Primary: 240 x 480, 230 x 460, 220 x 440 with Jumpers and Two-Pole Primary Fuse Block for Rejection Type Fuses
Secondary: 120/115/110 with Fuse Clips for 13/32 x 1-1/2 Fuses

VA	Dimensions (Inches)			Weight Lbs.	Dimensions (mm)			Weight kg	Wiring Diagram ①	Style Number
	Height	Width	Depth		Height	Width	Depth			
50	3-15/16	3	3	2.8	100	76	76	1.3	1	C0050E2AFB
75	3-15/16	3	3-1/2	3.7	100	76	89	1.7	1	C0075E2AFB
100	4-1/4	3-3/8	3-3/8	4.4	108	86	86	2.0	1	C0100E2AFB
150	4-9/16	3-3/4	4	6.9	116	95	102	3.1	1	C0150E2AFB
200	5-3/16	4-1/2	4	8.7	132	114	102	3.9	1	C0200E2AFB
250	5-3/16	4-1/2	4-3/8	10.2	132	114	111	4.6	1	C0250E2AFB
300	5-3/16	4-1/2	4-3/4	11.5	132	114	121	5.2	1	C0300E2AFB
350	5-3/16	4-1/2	5-1/4	13.8	132	114	133	6.3	1	C0350E2AFB
500	6-1/8	5-1/4	5-1/2	19.4	156	133	140	8.8	1	C0500E2AFB
750	6-1/8	5-1/4	7	28.3	156	133	178	12.8	1	C0750E2AFB
1000	7-1/16	6-3/4	6-7/16	29.7	179	171	164	13.4	1	C1000E2AFB
1500	7-3/4	7-1/2	7-3/8	40.2	197	191	187	18.1	1	C1500E2AFB

Primary: 240 x 480 with Jumpers and Two-Pole Primary Fuse Block for Rejection Type Fuses
Secondary: 24 with Fuse Clips for 13/32 x 1-1/2 Fuses

VA	Dimensions (Inches)			Weight Lbs.	Dimensions (mm)			Weight kg	Wiring Diagram ①	Style Number
	Height	Width	Depth		Height	Width	Depth			
50	3-15/16	3	3	2.8	100	76	76	1.3	2	C0050E2BFB
75	3-15/16	3	3-1/2	3.8	100	76	89	1.7	2	C0075E2BFB
100	4-1/4	3-3/8	3-3/8	4.4	108	86	86	2.1	2	C0100E2BFB
150	4-9/16	3-3/4	4	6.9	116	95	102	3.1	2	C0150E2BFB
200	5-3/16	4-1/2	4	8.7	132	114	102	3.9	2	C0200E2BFB
250	5-3/16	4-1/2	4-3/8	10.3	132	114	111	4.7	2	C0250E2BFB
300	5-3/16	4-1/2	4-3/4	11.6	132	114	121	5.3	2	C0300E2BFB
350	5-3/16	4-1/2	5-1/4	13.6	132	114	133	6.2	2	C0350E2BFB
500	6-1/8	5-1/4	5-5/8	17.7	156	133	143	8.0	2	C0500E2BFB

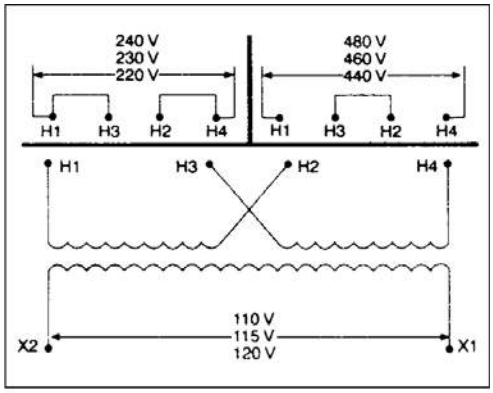

Figure 9-12. Diagram 1

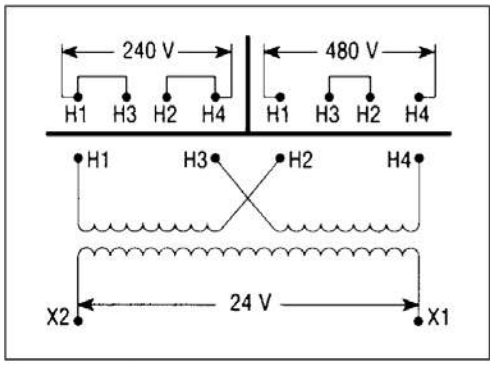

Figure 9-13. Diagram 2

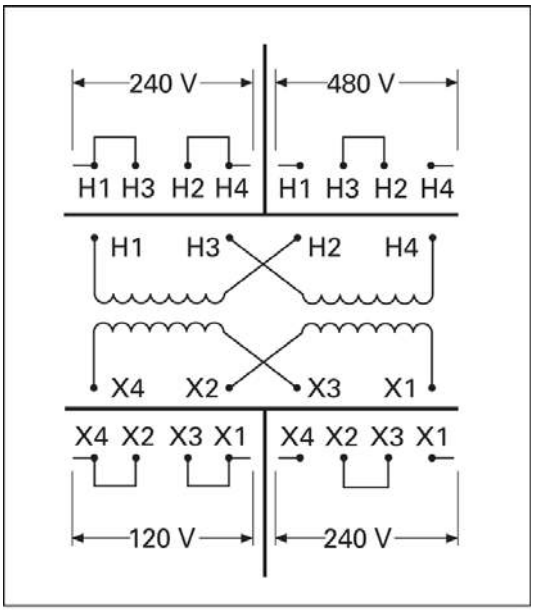

Figure 9-22. Diagram 11

wieland

42-063-001

Datasheet

Art.No. 07.311.0155.0

End plate AP 2,5 -4 /V0

End plate for DIN rail terminal blocks type WK ..., color gray

Art.No.	07.311.0155.0
EAN	4015573392663
Order unit	10 pieces

Approvals

Technical data

General

Colour	Grey
Type of end plate	Yes
Type of partition	No
Thickness	1.5 mm
Snap in	Yes
Inflammability class of insulation material acc. with UL94	V0

Accessories

Type of end plate	Yes
Type of partition	No
Colour	Grey
Thickness	1.5 mm
Snap in	Yes
Inflammability class of insulation material acc. with UL94	V0

Feed-through blocks with screw connection

selos

wieland

42-063-003

UL wire connection versions

[4] or 2x no. 14 sol/str AWG
or 2x no. 16 sol/str AWG
or 2x no. 18 sol/str AWG
or 3x no. 20 sol/str AWG or 3x no. 22 sol/str AWG

[5] or 2x no. 12 sol/str AWG
or 2x no. 16 sol/str AWG
or 3x no. 18 sol/str AWG or 3x no. 22 sol/str AWG

[6] or 2x no. 12 sol/str AWG
or 2x no. 14 sol/str AWG
or 3x no. 16 sol/str AWG

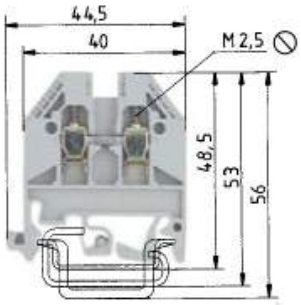

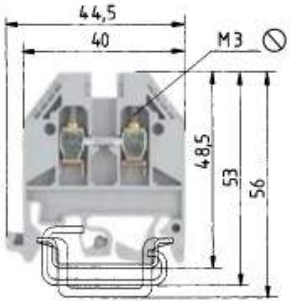

		WK 2,5/U				WK 4/U			
0344 Ⓔx II 2GD IM2		fine-stranded	solid	V	A	fine-stranded	solid	V	A
Ex e I/II		0.5-2.5 mm²	0.5-4 mm²	800V/8kV/3	24	0.5-4 mm²	0.5-6 mm²	800V/8kV/3	32
EN 60947-7-1:2002									
UL ratings	Field/factory wiring	No. 22-12 AWG		600V	20/30	No. 22-10 AWG[4]		600V	30/35
CSA ratings		No. 24-12 AWG		600V	25	No. 20-10 AWG		600V	40
KEMA 02 ATEX 2114 U[1] EN 60079-0/EN 60079-7		0.5-2.5 mm²	0.5-4 mm²	690V	23	0.5-4 mm²	0.5-6 mm²	690V	14/27[3]
Width	Wire strip length	5 mm			9mm	6mm			9mm
Approvals									

		Type	Part No.	Std. Pack	Type	Part No.	Std. Pack
Feed-through block	gray	WK 2,5/U	57.503.0055.0	100	WK 4/U	57.504.0055.0	100
Feed-through block Ex i	blue	WK 2,5/U BLAU	57.503.0055.6	100	WK 4/U BLAU	57.504.0055.6	100
Accessories							
1. Mounting rail TS 35, DIN rail 7.5 mm high	L = 2 m	35 x 27 x 7,5 EN 60715	98.300.0000.0	1	35 x 27 x 7,5 EN 60715	98.300.0000.0	1
Mounting rail TS 35, DIN rail, 15 mm high	L = 2 m	35 x 24 x 15 EN 60715	98.360.0000.0	1	35 x 24 x 15 EN 60715	98.360.0000.0	1
Mounting rail TS 32, G rail[2]	L = 2 m	9006 EN 60715 G-32	98.190.0000.0	1	9006 EN 60715 G-32	98.190.0000.0	1
2. End clamp with U-foot[2]	10mm wide	WE 1/U	Z5.523.5753.0	100	WE 1/U	Z5.523.5753.0	100
End clamp TS 35, with screw	8mm wide	9708/2 S35	Z5.522.8553.0	100	9708/2 S35	Z5.522.8553.0	100
End clamp TS 35, without screw	8mm wide	WEF 1/35	Z5.523.9353.0	100	WEF 1/35	Z5.523.9353.0	100
3. End plate	gray	AP 2,5 - 4	07.311.0155.0	10	AP 2,5 - 4	07.311.0155.0	10
	blue	AP 2,5 - 4 BLAU	07.311.0155.6	10	AP 2,5 - 4 BLAU	07.311.0155.6	10
4. Partition	gray	TW 2,5 - 4	07.311.1155.0	10	TW 2,5 - 4	07.311.1155.0	10
	blue	TW 2,5 - 4 BLAU	07.311.1155.6	10	TW 2,5 - 4 BLAU	07.311.1155.6	10
5. Cross connector with screws	2 pole	IVB WK 2,5 - 2	Z7.280.2227.0	10	IVB WK 4 - 2	Z7.281.1227.0	10
insulated	3 pole	IVB WK 2,5 - 3	Z7.280.2327.0	10	IVB WK 4 - 3	Z7.281.1327.0	10
	up to 12 pole	IVB WK 2,5 - 12	Z7.280.3227.0	10	IVB WK 4 - 12	Z7.281.2227.0	10
6. Partition plate with marking facility		TS 2,5 GELB	07.311.2053.8	10	TS 4 GELB	07.311.2153.8	10
7. Single cover with marking facility		AD VB 2,5 GELB	04.326.2053.8	10	AD VB 4 GELB	04.326.2153.8	10
8. Cover with warning symbol over 4 blocks		AD VB 5/4 GELB	04.343.4756.8	10	AD VB 6/4 GELB	04.343.4856.8	10

For more accessories see pages 60-77
For marking systems see pages 70-75

[1] For maintaining the proper isolation distances, the open side of a feed-through terminal block as well as both sides of a jumper are to be enclosed by partitions.
[1] Please note the mounting instructions on the cover page.
[2] Do not use in Ex environments.
[3] With/without jumper

ELEMECH INC.
630-499-7080 · www.elemechinc.com

Rev: 0	Device Tag: TB		
Date: 8/20/2019			
Manuf.: . PNo: Wieland: 57.504.0055.0	By: MBS	Job Number: EVC7838	Page # 1/1

fasis

wieland

42-063-000

2,5 mm²/5 mm Width

Type	Part no.	Std. pack
Marking strips, unmarked		
9705 A/5/10	04.242.5053.0	25
Marking strips, marked		
9705 A/5/9 B 1 - 9	04.842.4953.0	25
9705 A/5/10 B*	04.842.5053.0	25
9705 A/5/10 B 1 - 10	04.845.0153.0	25
11 - 20	04.845.0253.0	25
21 - 30	04.845.0353.0	25
31 - 40	04.845.0453.0	25
41 - 50	04.845.0553.0	25
51 - 60	04.845.0653.0	25
61 - 70	04.845.0753.0	25
71 - 80	04.845.0853.0	25
81 - 90	04.845.0953.0	25
91 - 100	04.845.1053.0	25
⏚ (10 x)	04.855.0053.0	25
⏚ (10 x)	04.855.0153.0	25
+ (10 x)	04.855.0253.0	25
– (10 x)	04.855.0353.0	25
L1 (10 x)	04.855.0453.0	25
L2 (10 x)	04.855.0553.0	25
L3 (10 x)	04.855.0653.0	25
PE (10 x)	04.855.0753.0	25
SL (10 x)	04.855.3153.0	25
N (10 x)	04.855.3253.0	25
F1 (10 x)	04.855.0953.0	25
F2 (10 x)	04.855.1053.0	25
L1, L2, L3, N, PE (2 x)	04.855.0853.0	25
with enlarged marking area		
9705 AL/5/10	04.242.5153.0	25
*Custom marking upon request		

4 mm²/6 mm Width

Type	Part no.	Std. pack
Marking strips, unmarked		
9705 A/6/10	04.242.6053.0	25
Marking strips, marked		
9705 A/6/9 B 1 - 9	04.842.5953.0	25
9705 A/6/10 B*	04.842.6053.0	25
9705 A/6/10 B 1 - 10	04.846.0153.0	25
11 - 20	04.846.0253.0	25
21 - 30	04.846.0353.0	25
31 - 40	04.846.0453.0	25
41 - 50	04.846.0553.0	25
51 - 60	04.846.0653.0	25
61 - 70	04.846.0753.0	25
71 - 80	04.846.0853.0	25
81 - 90	04.846.0953.0	25
91 - 100	04.846.1053.0	25
⏚ (10 x)	04.856.0053.0	25
⏚ (10 x)	04.856.0153.0	25
+ (10 x)	04.856.0253.0	25
– (10 x)	04.856.0353.0	25
L1 (10 x)	04.856.0453.0	25
L2 (10 x)	04.856.0553.0	25
L3 (10 x)	04.856.0653.0	25
PE (10 x)	04.856.0753.0	25
SL (10 x)	04.856.3153.0	25
N (10 x)	04.856.3253.0	25
F1 (10 x)	04.856.0953.0	25
F2 (10 x)	04.856.1053.0	25
L1, L2, L3, N, PE (2 x)	04.856.0853.0	25
with enlarged marking area		
9705 AL/6/10	04.242.6353.0	25
*Custom marking upon request		

10 mm²/10 mm Width

16 mm²/12 mm Width

35 mm²/16 mm Width

Type	Part no.	Std. pack
marked for 5 blocks (every 2nd tag) *		
9705 A/5/10/5 B	04.842.5553.0	25
marked for 5 blocks (every 2nd tag) *		
9705 A/6/10/5 B	04.842.6553.0	25
marked for 5 blocks (every 2nd tag) *		
9705 A/8/10/5 B	04.842.8553.0	25

* indicate required marking with part no.

ELEMECH INC.
630-499-7080 · www.elemechinc.com

Rev: 0	Device Tag: TB,DB		
Date: 8/20/2019			
Manuf.: . PNo: Wieland: 04.242.6353-CUSTOM	By: MBS	Job Number: EVC7838	Page # 1/1

Item No. 57.504.9055.0

wieland

Earth terminal WK 4 SL/ U /V0

Ground DIN rail terminal block with screw connection for mounting on TS 35 and TS 32, nominal cross section 4 mm², width 6 mm, color green/yellow

42-063-004

Rated impulse voltage	8 kV
Pollution degree	3
Closing plate required	No
Length	51 mm
Type of insulation material	Thermoplastic
Cross section UL	22-10 AWG
Cross section CSA	20-10 AWG
Maximum cross section fine stranded	4 mm²
Wire strip length	9 mm
Torque conductor mounting	0.5 Nm
Torque rail mounting	0,5

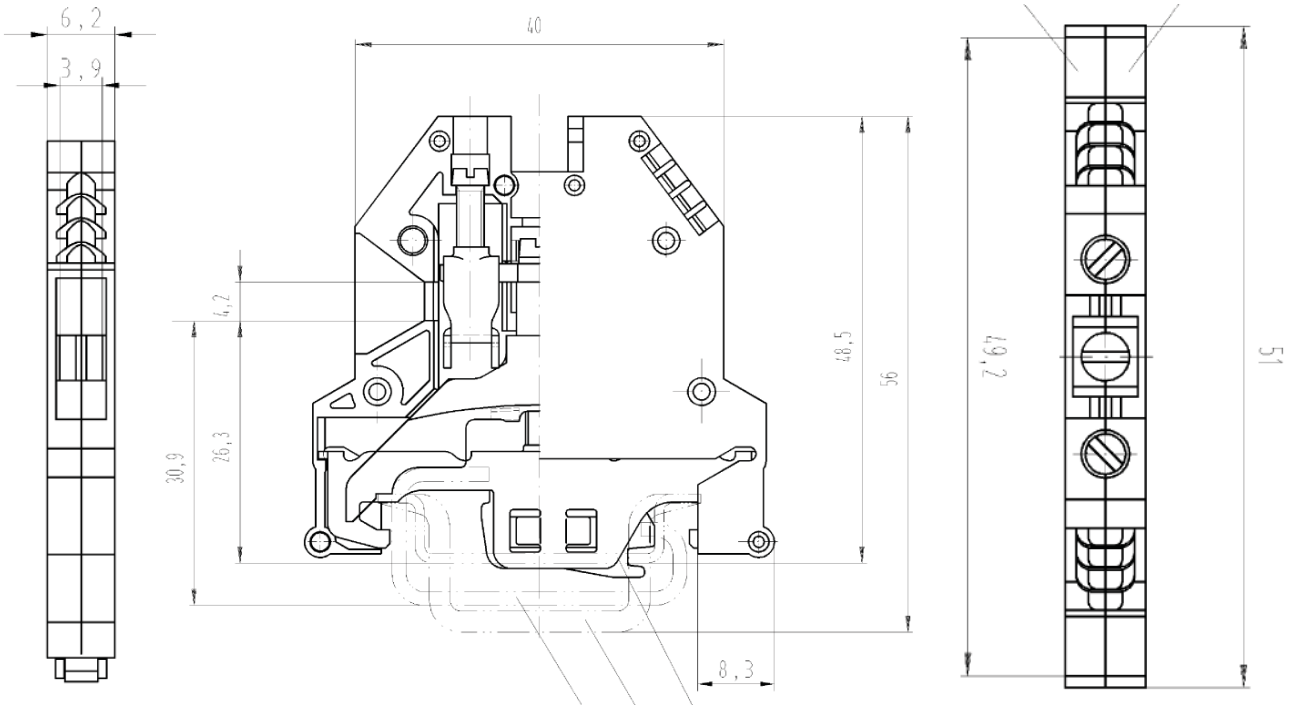

ELEMECH INC.
630-499-7080 · www.elemechinc.com

Manuf.: . PNo: Wieland: 57.504.9055.0	Rev: 0	Device Tag: TB,DB	
	Date: 8/20/2019		
	By: MBS	Job Number: EVC7838	Page # 1/1

Item No. Z5.522.8553.0

End bracket 9708 / 2 S 35

End clamp for mounting rail TS 35

42-063-009

Item No.	Z5.522.8553.0
EAN	4015573141766
order unit	100 Piece(s)

Technical data

Accessories

ArticlePrice	udp_no_price
Colour	Black
Inflammability class of insulation material acc. with UL94	V2
Width/grid dimension	8 mm
Latching	Screwable
Length	49 mm
Material	Metal
Mounting method	DIN rail (top hat rail) 35/7.5 mm

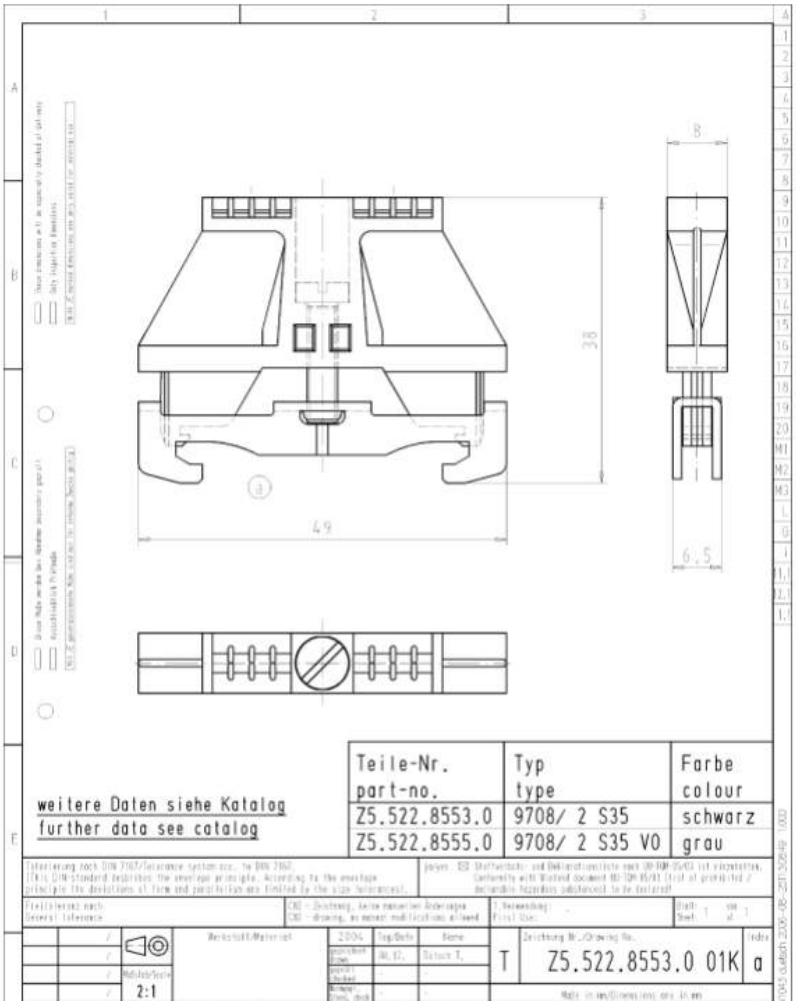

ELEMECH INC. 630-499-7080 · www.elemechinc.com	Rev: 0	Device Tag: TB,DB	
	Date: 8/20/2019		
Manuf.: . PNo: Wieland: Z5.522.8553	By: MBS	Job Number: EVC7838	Page # 1/1

Item No. Z7.281.1227.0

Insulated jumper bar IVBWK 4 - 2

Cross connector, insulated for DIN rail terminal blocks type WK ..., 2 -pole

42-063-015

Item No.	Z7.281.1227.0
EAN	4015573156081
order unit	10 Piece(s)

Technical data

Accessories

ArticlePrice	
Colour	Yellow
Type	Cross connector
Modular spacing	5.95 mm
Number of bridged clamps	2
Mounting method	Screwable
Insulated	Yes

Type	Part no.	Std. pack
for terminal blocks type		
WK 2,5/U	**5 mm spacing Screw: M 2.5**	
WK 2,5 - 4 KOI/U		
WK 2,5 U/8113 S/H		
WKN 2,5 E/U		
2pole VB WK 2,5-2	Z7.280.0227.0	10
3pole VB WK 2,5-3	Z7.280.0327.0	10
4pole VB WK 2,5-4	Z7.280.0427.0	10
5pole VB WK 2,5-5	Z7.280.0527.0	10
6pole VB WK 2,5-6	Z7.280.0627.0	10
80pole VB WK 2,5 M-80	Z7.280.0027.0	10
WKM 2,5/15	**5 mm spacing Screw: M 2.5**	
WKM 2,5 F1/15		
WKM 2,5 F2/15		
WKM 2,5/2 S 2,8 1 K/15		
WKM 2,5 TP1 O/15		
WKM 2,5 TP2 O/15		
2pole VB WKM 2,5/15-2	Z7.215.4227.0	50
3pole VB WKM 2,5/15-3	Z7.215.4327.0	50
4pole VB WKM 2,5/15-4	Z7.215.4427.0	50
5pole VB WKM 2,5/15-5	Z7.215.4527.0	50
6pole VB WKM 2,5/15-6	Z7.215.4627.0	50
60pole VB WKM 2,5/15 M-60	Z7.215.4027.0	10
WK/3 S/IW/U	**6 mm spacing Screw: M 3**	
WK/3 - 6 S/IW/U		
WK/4 S/IW/U		
WK/4-8 S/IW/U		
2pole VB WK/...S/IW/U-2	Z7.281.3227.0	10
3pole VB WK/...S/IW/U-3	Z7.281.3327.0	10
4pole VB WK/...S/IW/U-4	Z7.281.3427.0	10
5pole VB WK/...S/IW/U-5	Z7.281.3527.0	10
6pole VB WK/...S/IW/U-6	Z7.281.3627.0	10
20pole VB WK/...S/IW/U-20	Z7.281.3027.0	10

Type	Part no.	Std. pack
WK 4/U	**6 mm spacing Screw: M 3**	
WK 4TKS D/U		
WK 4 3 S 1 K/U		
WK 4 3-6 S 1 K/U		
WK 4 5 S 2,8 1 K/U		
WK 4 3 S 1 K/IW/U		
WK 4 3-6 S 1 K/IW/U		
WK 4/U F1		
WK 4/U F2		
2pole VB WK 4-2	Z7.281.0227.0	10
3pole VB WK 4-3	Z7.281.0327.0	10
4pole VB WK 4-4	Z7.281.0427.0	10
5pole VB WK 4-5	Z7.281.0527.0	10
6pole VB WK 4-6	Z7.281.0627.0	10
70pole VB WK 4 M-70	Z7.281.0027.0	10
WK 4/D 1/2 U	**6 mm spacing Screw: M 3**	
WK 4/D 2/2 U		
2pole VB WK 4 D..-2	Z7.281.6227.0	10
3pole VB WK 4 D..-3	Z7.281.6327.0	10
4pole VB WK 4 D..-4	Z7.281.6427.0	10
5pole VB WK 4 D..-5	Z7.281.6527.0	10
6pole VB WK 4 D..-6	Z7.281.6627.0	10
70pole VB WK 4 D.. M-70	Z7.281.6027.0	10
WKM 4/15	**6 mm spacing Screw: M 3**	
WK 4/D EU		
WK 4 E/U for upper tier block		
WK 4 E/U GU ORANGE		
WK 4 E/U GO		
WK 4 E/U G2		
WK 4 E/U G1 ORANGE		
WK 4 E/U G-URL		
WK 4 E/U G-ULR		
WK 4 E/U VB SCHWARZ		
2pole 9215 - 2	Z7.210.3227.0	50
3pole 9215 - 3	Z7.210.3327.0	50
4pole 9215 - 4	Z7.210.3427.0	50
5pole 9215 - 5	Z7.210.3527.0	50
6pole 9215 - 6	Z7.210.3627.0	50
70pole 9215 M-70	Z7.210.3027.0	10

Type	Part no.	Std. pack
WK 4/3-6 SKO	**6 mm spacing Screw: M 3**	
2pole 2072/2	Z7.220.0227.0	50
3pole 2072/3	Z7.220.0327.0	50
4pole 2072/4	Z7.220.0427.0	50
5pole 2072/5	Z7.220.0527.0	50
6pole 2072/6	Z7.220.0627.0	50
70pole 2072/M	Z7.210.1027.0	10
WK/5 S/U	**6 mm spacing Screw: M 3**	
WK/5-10 S/U		
WK/3-6 S/U		
WK/4 S/U		
WK/4-8 S/U		
2pole 9703/6-2	Z7.211.0227.0	50
3pole 9703/6-3	Z7.211.0327.0	50
4pole 9703/6-4	Z7.211.0427.0	50
5pole 9703/6-5	Z7.211.0527.0	50
6pole 9703/6-6	Z7.211.0627.0	50
70pole 9703/6 M-70	Z7.211.0027.0	10

ELEMECH INC.
630-499-7080 · www.elemechinc.com

Rev: 0	Device Tag: TB1		
Date: 8/20/2019			
Manuf.: . PNo: Wieland: Z7.281.1227	By: MBS	Job Number: EVC7838	Page # 1/1

SMALL COMPACT THERMOSTAT

KTO 011 / KTS 011

46-034-000

Technical Data KT 011

Part No.	Contact type	Scale on housing
01140.9-00	normally closed	30 - 140°F
01141.9-00	normally open	30 - 140°F
01146.9-00	normally closed	0 - 60°C
01147.9-00	normally open	0 - 60°C

Sensor element:	Thermostatic bi-metal
Maximum tolerance:	±7.2°F (4K)
Switching difference (hysteresis):	12.6°F ± 5.4°F (7°C ± 3K)
Service life:	100,000 cycles
Switching capacity (max. load):	15A resistive/2A inductive @ 120 VAC
	10A resistive/2A inductive @ 250 VAC
	DC 30W
EMI/EMC compliance:	EN 55014-1-2, EN 61000-3-2, EN 61000-3-3
Connections:	2-pole terminal for AWG 14 max. (2.5 mm²)
Mounting:	Clip for 35 mm DIN rail (EN 50022)
Dimensions (H x W x D):	2.4 x 1.3 x 1.7" (60 x 33 x 43 mm)
Housing:	Plastic, UL94V-0
Weight:	1.27 oz (36 g)
Protection type:	IP 20
Operating/storage temperature:	-49 to 158°F (-45 to 70°C)
Agency approvals:	UL, CSA

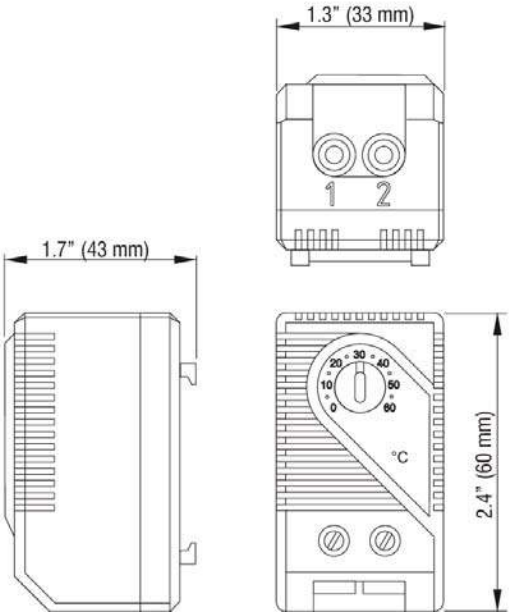

ELEMECH INC. 630-499-7080 · www.elemechinc.com	Rev: 0	Device Tag: TS2	
	Date: 8/20/2019		
Manuf.: . PNo: Stego: 01140.9-00	By: MBS	Job Number: EVC7838	Page # 1/1

4116 = Universal transmitter

08-247-A001

Electrical specifications:

Specifications range:
-20°C to +60°C

Common specifications:

Supply voltage, universal ..... 21.6...253 VAC, 50...60 Hz or 19.2...300 VDC
Max. consumption..... ≤ 2.5 W
Fuse..... 400 mA SB / 250 VAC
Isolation voltage, test / operation..... 2.3 kVAC / 250 VAC
Communications interface ..... Programming front 4501
Signal / noise ratio..... Min. 60 dB (0...100 kHz)
Response time (0...90%, 100...10%):
Temperature input ..... ≤ 1 s
mA / V input..... ≤ 400 ms
Calibration temperature..... 20...28°C
Accuracy, the greater of the general and basic values:

General values		
Input type	Absolute accuracy	Temperature coefficient
All	≤ ±0.1% of span	≤ ±0.01% of span / °C

Basic values		
Input type	Basic accuracy	Temperature coefficient
mA	≤ ±4 µA	≤ ±0.4 µA/°C
Volt	≤ ±20 µV	≤ ±2 µV/°C
RTD	≤ ±0.2°C	≤ ±0.01°C/°C
Lin. R	≤ ±0.1 Ω	≤ ±0.01 Ω/°C
Potentiometer	≤ ±0.1 Ω	≤ ±0.01 Ω/°C
TC type: E, J, K, L, N, T,	≤ ±1°C	≤ ±0.05°C/°C
TC type: B, R, S, W3, W5, LR	≤ ±2°C	≤ ±0.2°C/°C

EMC immunity influence ..... < ±0.5% of span
Extended EMC immunity:
NAMUR NE 21, A criterion, burst..... < ±1% of span

Auxiliary supplies:
2-wire supply (terminal 44...43) ..... 25...16 VDC / 0...20 mA
Max. wire size..... 1x2.5 mm² stranded wire
Screw terminal torque ..... 0.5 Nm
Relative humidity ..... < 95% RH (non-cond.)
Dimen., without display front (HxBxD). 109 x 23.5 x 104 mm
Dimensions, w. display front (HxBxD). 109 x 23.5 x 116 mm
Tightness (enclosure / terminals)..... IP50 / IP20
Weight ..... 170 g / 185 g with 4501

RTD, linear resistance and potentiometer input:

Input type	Min. value	Max. value	Standard
Pt100	-200°C	+850°C	IEC60751
Ni100	-60°C	+250°C	DIN 43760
Lin. R	0 Ω	10000 Ω	-
Potentiometer	10 Ω	100 kΩ	-

Cable resistance per wire (max.), RTD . 50 Ω
Sensor current, RTD..... Nom. 0.2 mA
Effect of sensor cable resistance (3- / 4-wire), RTD ..... < 0.002 Ω / Ω
Sensor error detection, RTD..... Yes
Short circuit detection, RTD ..... < 15 Ω

TC input:

Thermocouple type ..... B, E, J, K, L, N, R, S, T, U, W3, W5, LR
Cold junction compensation (CJC):
via internally mounted sensor ..... < ±1.0 °C
Sensor error detection, all TC types.. Yes
Sensor error current:
when detecting..... Nom. 2 µA
else ..... 0 µA

Current input:

Measurement range ..... -1...25 mA
Programmable measurement ranges 0...20 and 4...20 mA
Input resistance..... Nom. 20 Ω + PTC 50 Ω

Voltage input:

Measurement range ..... -20 mV...12 VDC
Programmable measurement ranges . 0/0.2...1; 0/1...5; 0/2...10 V
Input resistance..... Nom. 10 MΩ

Current output:

Signal range (span)..... 0...20 mA
Programmable signal ranges..... 0/4...20 and 20...4/0 mA
Load (max.)..... 20 mA / 800 Ω / 16 VDC
Load stability ..... ≤ 0.01% of span / 100 Ω
Sensor error detection..... 0 / 3.5 / 23 mA / none
NAMUR NE 43 Upscale / Downscale 23 mA / 3.5 mA
Current limit ..... ≤ 28 mA

Voltage output:

Signal range ..... 0...10 VDC
Programmable signal ranges..... 0/0.2...1; 0/1...5 ; 0/2...10; 1...0.2/0; 5...1/0; 10...2/0 V
Load (min.)..... 500 kΩ

Relay outputs:

Relay functions..... Setpoint, Window, Sensor error, Power and Off
Hysteresis, in % / display counts..... 0.1...25% / 1...2999
On and Off delay ..... 0...3600 s
Max. voltage..... 250 VRMS
Max. current ..... 2 A / AC or 1 A / DC
Max. AC power..... 500 VA
Sensor error detection..... Break / Make / Hold

Ex / I.S. approval:

FM, applicable in ..... Cl. I, Div. 2, Gr. A, B, C, D Class I, Div. 2, Group IIC Zone 2
Max. ambient temperature for T5..... 60°C

Marine approval:

Det Norske Veritas, Ships & Offshore. Stand. f. Certific. No. 2.4

Observed authority requirements: **Standard:**

EMC 2004/108/EC
Emission and immunity ..... EN 61326
LVD 73/23/EEC..... EN 61010-1
FM ..... 3600, 3611, 3810 and ISA 82.02.01
UL, Standard for Safety..... UL 508

of span = of the currently selected measurement range

ELEMECH INC.
630-499-7080 · www.elemechinc.com

Rev: 0	Device Tag: UT1,2
Date: 8/20/2019	
By: MBS	Job Number: EVC7838
Manuf.: . PNo: PR Electronics: 4116 Assembly	Page # 1/1

Product data sheet
ATV320U75N4B
variable speed drive ATV320 - 7.5kW - 380...500V - 3 phase - book

50-058-138

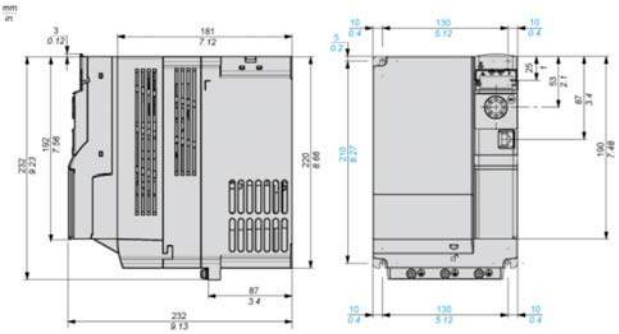

Main

Range of product	Altivar Machine ATV320
Product or component type	Variable speed drive
Product specific application	Complex machines
Device short name	ATV320
Format of the drive	Book
Product destination	Asynchronous motors Synchronous motors
EMC filter	Class C2 EMC filter integrated
IP degree of protection	IP20 conforming to EN/IEC 61800-5-1
Degree of protection	UL type 1 with UL type 1 conformity kit
Type of cooling	Fan
Network number of phases	3 phases
[Us] rated supply voltage	380...500 V (- 15...10 %)
Supply frequency	50...60 Hz (- 5...5 %)
Motor power kW	7.5 kW for heavy duty
Motor power hp	10 hp for heavy duty
Line current	26.5 A at 380 V for heavy duty 18.7 A at 500 V for heavy duty
Prospective line Isc	<= 22 kA
Apparent power	16.2 kVA at 500 V for heavy duty
Continuous output current	17 A at 4 kHz for heavy duty
Maximum transient current	25.5 A during 60 s for heavy duty
Asynchronous motor control profile	Voltage/Frequency ratio, 2 points Voltage/Frequency ratio, 5 points Flux vector control without sensor, standard Voltage/Frequency ratio - Energy Saving, quadratic U/f Flux vector control without sensor - Energy Saving
Synchronous motor control profile	Vector control without sensor
Speed drive output frequency	0.1...599 Hz
Nominal switching frequency	4 kHz
Switching frequency	4...16 kHz with current derating 2...16 kHz adjustable
Safety function	STO (safe torque off) SIL 3 SS1 (safe stop 1) SMS (safe maximum speed) SLS (safe limited speed) GDL (guard door locking)
Communication port protocol	Modbus CANopen
Option card	Communication module: CANopen daisy chain RJ45 Communication module: CANopen SUB-D 9 Communication module: CANopen open style terminal block Communication module: EtherCAT RJ45 Communication module: DeviceNet Communication module: Ethernet/IP Communication module: Profibus DP V1 Communication module: Profinet Communication module: Ethernet Powerlink

Control Connection Diagram in Source Mode

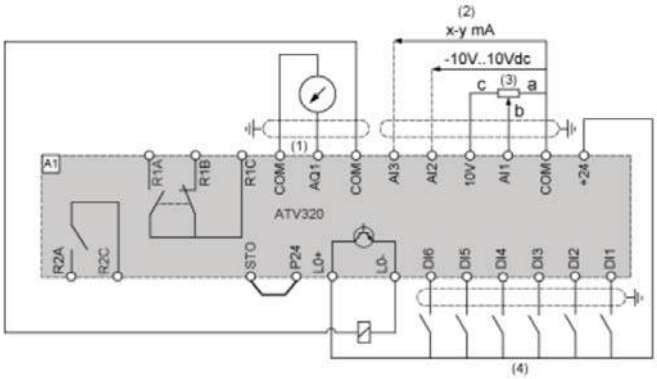

(1) Analog output
(2) Analog inputs
(3) Reference potentiometer (10 kOhm maxi)
(4) Digital inputs

Derating Curves

Derating curve for the nominal drive current (In) as a function of temperature and switching frequency (SF).

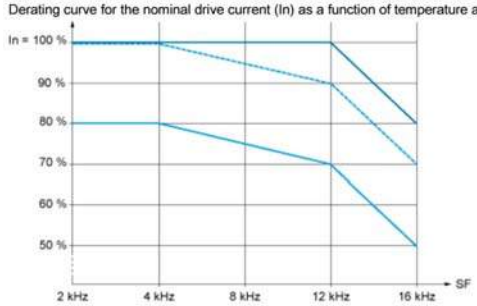

40 °C (104 °F) - Mounting type A, B and C
50 °C (122 °F) - Mounting type A, B and C
60 °C (140 °F) - Mounting type B and C
In : Nominal Drive Current
SF : Switching Frequency

Product certifications	UL NOM 117 CSA RCM EAC
Marking	CE

ELEMECH INC.
630-499-7080 · www.elemechinc.com

Rev: 0	Device Tag: VFD1,2		
Date: 8/20/2019			
Manuf.: . PNo: Square D: ATV320U75N4B	By: MBS	Job Number: EVC7838	Page # 1/2

Complementary

Output voltage	<= power supply voltage
Permissible temporary current boost	1.5 x In during 60 s for heavy duty
Speed range	1...100 with asynchronous motor in open-loop mode
Speed accuracy	+/- 10 % of nominal slip 0.2 Tn to Tn
Torque accuracy	+/- 15 %
Transient overtorque	170...200 % of nominal motor torque
Braking torque	< 170 % with braking resistor during 60 s
Regulation loop	Adjustable PID regulator
Motor slip compensation	Adjustable 0...300 % Not available in voltage/frequency ratio (2 or 5 points) Automatic whatever the load
Acceleration and deceleration ramps	Ramp switching CUS S U Deceleration ramp adaptation Deceleration ramp automatic stop DC injection Linear
Braking to standstill	By DC injection
Protection type	Drive: thermal protection Drive: overcurrent between output phases and earth Drive: input phase breaks Drive: overheating protection Drive: short-circuit between motor phases
Frequency resolution	Display unit: 0.1 Hz Analog input: 0.012/50 Hz
Electrical connection	Control, screw terminal: 0.5...1.5 mm² AWG 20...AWG 16 Motor/Braking resistor, screw terminal: 1.5...2.5 mm² AWG 14...AWG 12 Power supply, screw terminal: 1.5...4 mm² AWG 14...AWG 10
Type of connector	1 RJ45 for Modbus/CANopen on front face
Physical interface	2-wire RS 485 for Modbus
Transmission frame	RTU for Modbus
Transmission rate	4.8, 9.6, 19.2, 38.4 kbit/s for Modbus 50 kbps, 125 kbps, 250 kbps, 500 kbps, 1 Mbps for CANopen
Data format	8 bits, configurable odd, even or no parity for Modbus
Type of polarization	No impedance for Modbus
Number of addresses	1...247 for Modbus 1...127 for CANopen
Method of access	Slave for CANopen
Supply	Internal supply for reference potentiometer (1 to 10 kOhm): 10.5 V DC (+/- 5 %) current <= 10 mA (overload and short-circuit protection)
Local signalling	1 LED green for CANopen run 1 LED red for CANopen error
Analogue input number	3
Analogue input type	Voltage (AI1): 0...10 V DC, impedance 30000 Ohm, resolution 10 bits Bipolar differential voltage (AI2): +/- 10 V DC, impedance 30000 Ohm, resolution 10 bits Current (AI3): 0...20 mA (or 4-20 mA, x-20 mA, 20-x mA or other patterns by configuration), impedance 250 Ohm, resolution 10 bits
Discrete input number	7
Discrete input type	Programmable (sink/source) (DI1...DI4): 24...30 V DC: level 1 PLC Programmable as pulse input 20 kpps (DI5): 24...30 V DC: level 1 PLC Switch-configurable PTC probe (DI6): 24...30 V DC Safe torque off (STO): 24...30 V DC, impedance 1500 Ohm
Discrete input logic	Negative logic (sink): : DI1...DI6, > 19 V (state 0) < 13 V (state 1) Positive logic (source): : DI1...DI6, < 5 V (state 0) > 11 V (state 1)
Analogue output number	1
Analogue output type	Software-configurable current (AQ1): 0...20 mA, impedance 800 Ohm, resolution 10 bits Software-configurable voltage (AQ1): 0...10 V, impedance 470 Ohm, resolution 10 bits
Sampling duration	Analog input (AI1, AI2, AI3): 2 ms Analog output (AQ1): 2 ms
Accuracy	Analog input AI1, AI2, AI3: +/- 0.2 % for a temperature of -10...60 °C Analog input AI1, AI2, AI3: +/- 0.5 % for a temperature of 25 °C Analog output AQ1: +/- 1 % for a temperature of 25 °C Analog output AQ1: +/- 2 % for a temperature of -10...60 °C
Linearity error	Analog input (AI1, AI2, AI3): +/- 0.2...0.5 % of maximum value Analog output (AQ1): +/- 0.3 %
Discrete output number	3
Discrete output type	Configurable relay logic NO/NC (R1A, R1B, R1C): electrical durability 100000 cycles Configurable relay logic NO (R2A, R2B): electrical durability 100000 cycles Logic (LO)
Refresh time	Logic input (DI1...DI6): 8 ms (+/- 0.7 ms) Relay output (R1A, R1B, R1C): 2 ms Relay output (R2A, R2C): 2 ms
Minimum switching current	Relay output (R1, R2): 5 mA at 24 V DC
Maximum switching current	Relay output (R1) on resistive load (cos phi = 1: 3 A at 250 V AC Relay output (R1) on resistive load (cos phi = 1: 4 A at 30 V DC Relay output (R1, R2) on inductive load (cos phi = 0.4: 2 A at 250 V AC Relay output (R1, R2) on inductive load (cos phi = 0.4: 2 A at 30 V DC Relay output (R2) on resistive load (cos phi = 1: 5 A at 250 V AC Relay output (R2) on resistive load (cos phi = 1: 5 A at 30 V DC
Specific application	Machinery

50-058-138

CHNF SERIES CONTINUOUS HINGE WITH CLAMPS TYPE 4X JUNCTION BOXES

PENTAIR

11-035-009

ENCLOSURE CATALOG NUMBER	ENCLOSURE DIMENSIONS (IN.)	SUB-PANEL CATALOG NUMBER
A-ABCCHNFSS6	A x B x C	A APB

NOTE:

1. SS - INDICATES 304 STAINLESS STEEL
2. 6 – INDICATES 316 STAINLESS STEEL

APPLICATION

Used in either indoor or outdoor applications, these enclosures combine a rugged continuous hinge, seamless foam-in-place gasket and stainless steel screw-down clamps for a reliable seal that protects components from corrosive environments.

SPECIFICATIONS

- 16 and 14 gauge Type 304 or 316L stainless steel
- Seams continuously welded and ground smooth
- Seamless foam-in-place gasket
- Stainless steel screws and clamps
- Pull stainless steel continuous hinge pin to remove door
- Weldnuts provided for mounting optional panels and terminal block kits
- Bonding provision on door and body

FINISH

Cover and sides of body have smooth #4 brushed finish.

ACCESSORIES

Fast-Operating Clamp-Cover Junction Box Clamp
Lock Kit for Clamp Cover Junction Boxes
Panels for Junction Boxes
Terminal Block Kit Assembly for Junction Boxes Overview

MODIFICATION AND CUSTOMIZATION

Hoffman excels at modifying and customizing products to your specifications. Contact your local Hoffman sales office or distributor for complete information.

INDUSTRY STANDARDS

UL 50, 50E Listed; Type 3R, 4, 4X, 12; File No. E27567
cUL Listed per CSA C22.2 No 94; Type 3R, 4, 4X, 12; File No. E27567
UL 508A Listed; Type 3R, 4, 4X, 12; File No. E61997
cUL Listed per CSA C22.2 No 94; Type 3R, 4, 4X, 12; File No. E61997

NEMA/EEMAC Type 3R, 4, 4X, 12, 13
CSA File No. 42184: Type 4, 4X, 12
IEC 60529, IP66
Meets NEMA Type 3RX requirements

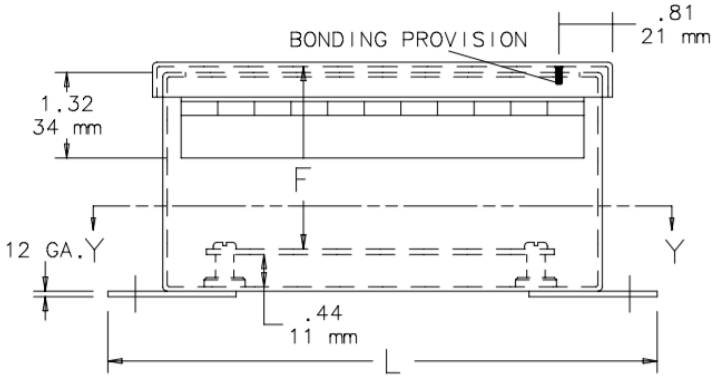

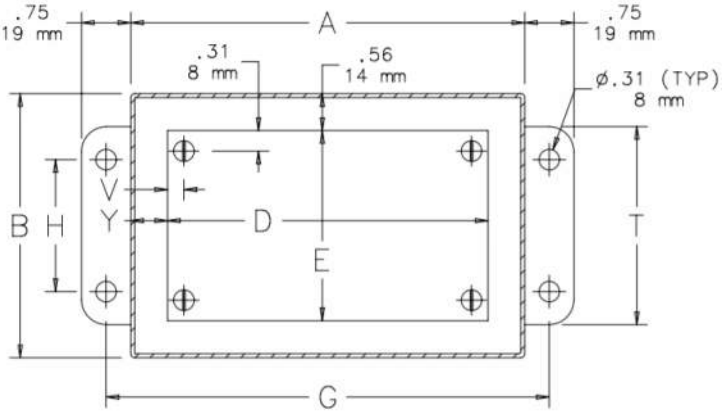

ELEMECH INC. 630-499-7080 · www.elemechinc.com	Rev: 0	Device Tag: EN	
	Date: 8/20/2019		
Manuf.: . PNo: Hoffman: A-1008CHNFSS	By: MBS	Job Number: EVC7838	Page # 1/1

Replacement Color Caps

30.5 mm Accessories

Allen-Bradley

32-005-043

Color	800T/H Pilot Light Color Caps		
	Standard*	Push-to-Test*	18 mm
	Cat. No.	Cat. No.	Cat. No.
Amber	**800T-N26A**	**800T-N42**	**800T-N122A**
Blue	**800T-N26B**	**800T-N43**	**800T-N122B**
Clear	**800T-N26C**	**800T-N45**	800T-N122C
Green	**800T-N26G**	**800T-N41**	**800T-N122G**
Red	**800T-N26R**	**800T-N40**	**800T-N122R**
White	**800T-N26W**	**800T-N44**	**800T-N122W**

30.5 mm Push Buttons

Pilot Lights

Allen-Bradley

32-005-048

800 T ___ – P T ___ 16 G
a b c d e f g

a

Protection Rating	
Code	Description
T	Metal, Type 4/13
H	Plastic, Type 4/4X/13

c

Power Module Type		
800T Type 4/13	Description	800H Type 4/4X/13
Code		Code
P	Transformer (or dual input)	PR
Q	Full voltage/ Universal	QR

d

Lamp Test Options	
Code	Description
Blank	No test option
T	Push-to-test
D	Dual input — diode♣
DT	Dual input — transformer relay
Note: Push-to-test supplied with factory jumpered contact block.	

e

Illumination Options	
Code	Description
Blank	Incandescent
H	LED*

f

Voltage	
Transformer	
Code	Description
16	120V AC 50/60 Hz
26	240V AC 50/60 Hz
46	480V AC 50/60 Hz
56	600V AC 50/60 Hz
Full Voltage — Incandescent	
12	12V AC/DC
24	24V AC/DC
48	48V AC/DC
10	120V AC/DC
20	240V AC/DC
Universal — LED	
2	12…130V AC/DC
Dual Input	
16	120V AC
24	24V AC/DC (Dual input diode only)

g

Lens Color		
Code	Color	Glass Code ▲
Blank	No lens	Blank
A	Amber	D
B	Blue	E
C	Clear	F
G	Green	H
R	Red	J
W	White	K

Specifications*

Electrical Ratings		
Contact ratings		Refer to the contact ratings tables on page 10-4.
Dielectric strength		2200V for one minute, 1300V for one minute (Logic Reed)
Electrical design life cycles		1 000 000 at max. rated load, 200 000 at max. rated load (Logic Reed)
Mechanical Ratings		
Vibration		10…2000 Hz, 1.52 mm displacement (peak-to-peak) max./ 10 G max. (except Logic Reed)
Shock		1/2 cycle sine wave for 11 ms ≥ 25 G (contact fragility) and no damage at 100 G
Degree of protection		Type 1/4/12/13 (800T); Type 1/4/4X/12/13 (800H); EN/IEC 60529 IP66/65
Mechanical design life cycles		
Push buttons	(Momentary, non-illuminated)	10 000 000 min.
	(Momentary, illuminated)	250 000 min.
	(Push-pull/twist-to-release)	250 000 min.
Selector switches	(Non-illuminated)	1 000 000 min.
	(Illuminated, key-operated)	200 000 min.
Potentiometers		25 000 min.
All other devices		200 000 min.
Contact operation		Shallow, mini, and low-voltage contact blocks: Slow, double make and break Logic Reed and sealed switch contact blocks: Single break magnetic
Wire gauge/Terminal screw torque		#18…14 AWG (#18…10 Max Duty) / 6…8 lb•in
Typical operating forces Operators without contact blocks		Flush, extended button, standard mushroom, jumbo plastic mushroom: 2 lbs max. Jumbo and extended aluminum mushroom head: 3.95 lbs max. Maintained selector switch: 3.6 in•lb max.
Spring return selector switches		3.6 in•lb to stop, 0.2 in•lb to return
Illuminated push buttons and push-to-test pilot lights		5 lb max.
2-position push-pull		8.0 lb max. push or pull
3-position push-pull		8 lb max. push to in position or pull to center position (15 lb max. pull to out position)
Twist-to-release or push-pull		9 lbs max. push or pull 30 in•oz max. twist, 6 in•oz minimum return
Potentiometer		Rotational torque 3…12 in•oz; stopping torque 12 in•lb (minimum)
Contact blocks	Standard	1 lb
	Logic Reed	1 lb max.
	Sealed switch	3 lb max. at 0.205 in. plunger travel
	Stackable sealed switch	1 lb max.
	MaxDuty	1.4 lb max.
	PenTUFF	1.4 lb max.
	Self Monitoring	1.6 lb
Environment		
Temperature range	Operating	-40…+131 °F (-40…+55 °C)
	Storage	-40…+185 °F (-40…+85 °C)
Note: Operating temperatures below freezing are based on the absence of moisture and liquids. Consult your local Rockwell Automation sales office or Allen-Bradley distributor for use in lower temperature applications.		
Humidity		50…95% RH from 77…140 °F (25…60 °C) per Procedure IV of MIL-STD-810C, Method 507.1 cycling test

ELEMECH INC. 630-499-7080 · www.elemechinc.com	Rev: 0	Device Tag: LT	
	Date: 8/20/2019		
Manuf.: . PNo: Allen-Bradley: 800H-PR16	By: MBS	Job Number: EVC7838	Page # 1/1

30.5 mm Push Buttons

Selector Switches

Allen-Bradley

39-005-001

800 T – HA 2 A

a b c d e

a

Protection Rating	
Code	Description
T	Metal, Type 4/13
H	Plastic, Type 4/4X/13

b

Finger-Safe Guards	
Code	Description
Blank	No guards
C	Guards on terminals

c

Knob Insert Colors		
800T Type 4/13	Description	800H Type 4/4X/13
Code		Code
H	White	HR
HX	Packet of colored inserts❄	HRX
Metal Wing Lever Colors§		
Code	Color	Code
HA	Red	—
HG	Grey	—

d

Operator Type and Function	
Standard Knob	
Code	Operator Function
2	Maintained
4	Spring return from left‡
5	Spring return from right
Knob Lever§	
Code	Operator Function
17	Maintained
18	Spring return from left‡
19	Spring return from right
Metal Wing Lever§	
Code	Operator Function
11	Maintained
15	Spring return from left‡
16	Spring return from right
Coin Slot§	
Code	Operator Function
6	Maintained
7	Spring return from left
8	Spring return from right

e

Contact Block(s)			
Code	Description		
	Contact Configuration	2-Position	
Blank	No contacts	—	—
Standard			
D1	1 N.O.	O	X
D2	1 N.C.	X	O
A	1 N.O. - 1 N.C.	O	X
		X	O
B	2 N.O. - 2 N.C.	O	X
		X	O
		O	X
		X	O

Specifications*

Electrical Ratings		
Contact ratings		Refer to the contact ratings tables on page 10-4.
Dielectric strength		2200V for one minute, 1300V for one minute (Logic Reed)
Electrical design life cycles		1 000 000 at max. rated load, 200 000 at max. rated load (Logic Reed)
Mechanical Ratings		
Vibration		10…2000 Hz, 1.52 mm displacement (peak-to-peak) max./ 10 G max. (except Logic Reed)
Shock		1/2 cycle sine wave for 11 ms ≥ 25 G (contact fragility) and no damage at 100 G
Degree of protection		Type 1/4/12/13 (800T); Type 1/4/4X/12/13 (800H); EN/IEC 60529 IP66/65
Mechanical design life cycles		
Push buttons	(Momentary, non-illuminated)	10 000 000 min.
	(Momentary, illuminated)	250 000 min.
	(Push-pull/twist-to-release)	250 000 min.
Selector switches	(Non-illuminated)	1 000 000 min.
	(Illuminated, key-operated)	200 000 min.
Potentiometers		25 000 min.
All other devices		200 000 min.
Contact operation		Shallow, mini, and low-voltage contact blocks: Slow, double make and break Logic Reed and sealed switch contact blocks: Single break magnetic
Wire gauge/Terminal screw torque		#18…14 AWG (#18…10 Max Duty) / 6…8 lb•in
Typical operating forces		
Operators without contact blocks		Flush, extended button, standard mushroom, jumbo plastic mushroom: 2 lbs max. Jumbo and extended aluminum mushroom head: 3.95 lbs max. Maintained selector switch: 3.6 in•lb max.
Spring return selector switches		3.6 in•lb to stop, 0.2 in•lb to return
Illuminated push buttons and push-to-test pilot lights		5 lb max.
2-position push-pull		8.0 lb max. push or pull
3-position push-pull		8 lb max. push to in position or pull to center position (15 lb max. pull to out position)
Twist-to-release or push-pull		9 lbs max. push or pull 30 in•oz max. twist, 6 in•oz minimum return
Potentiometer		Rotational torque 3…12 in•oz; stopping torque 12 in•lb (minimum)
Contact blocks	Standard	1 lb
	Logic Reed	1 lb max.
	Sealed switch	3 lb max. at 0.205 in. plunger travel
	Stackable sealed switch	1 lb max.
	MaxDuty	1.4 lb max.
	PenTUFF	1.4 lb max.
	Self Monitoring	1.6 lb
Environment		
Temperature range	Operating	-40…+131 °F (-40…+55 °C)
	Storage	-40…+185 °F (-40…+85 °C)
Note: Operating temperatures below freezing are based on the absence of moisture and liquids. Consult your local Rockwell Automation sales office or Allen-Bradley distributor for use in lower temperature applications.		
Humidity		50…95% RH from 77…140 °F (25…60 °C) per Procedure IV of MIL-STD-810C, Method 507.1 cycling test

Certifications

UL Listed
(File No. E14840, E10314
Guide No. NKCR, NOIV)

CSA Certified
(File No. LR1234, LR11924)

CSA C22.2, No. 14

ELEMECH INC. 630-499-7080 · www.elemechinc.com	Rev: 0	Device Tag: SS	
	Date: 8/20/2019		
Manuf.: . PNo: Allen-Bradley: 800H-HR2A	By: MBS	Job Number: EVC7838	Page # 1/1

Section Five: Enclosures

WEC218286Z - Beast Parts List

WEC218286Z General Arrangement Drawing

Control Panel Submittal Comments

WEC218286Z – CP01 Control Panel Parts List

WEC218286Z - CP01 Control Panel Drawing

WEC218286Z – CP02 Control Panel Parts List

WEC218286Z - CP02 Booster Pump Control Station Control Panel Drawing

This page intentionally left blank

Enviro-Care
A WAMGROUP® Company

Job Number: **WEC218286Z**
Job Name: **Opequon WRF - Fredrick-Winchester**
Revision:
Created Date: **2-Aug-19** Created By JW06

Line	Part Number	Part Name	Quantity	Unit	Material	Notes
101	WEC218286Z	SAVI Flo-Septage Station VFA 1200 DM	1	EA	304SS	Main Unit - Beast
102	RD-9016.1F140-26M4	Reducer - NORD, Ratio 26.29:1, M4	1	EA	CI	Drum Drive
103	RD-4282F140-90M3-35	Reducer - NORD, Ratio 90.52:1, M3-35-M4	1	EA	CI	Auger Drive
104	MTR-EPV0024C	Motor - TECO, 2HP, 230-460V, 60HZ, 145TC	1	EA	STL	For drum and auger
105	MTR-EPV0022C	Motor - TECO, 2HP, 230-460V, 60HZ, 145TC	1	EA	STL	3600RPM for Auger on FOG
106	HHSC-3/8"-0100-304S	3/8" capscrew x 1" LG	8	EA	304SS	Motors to reducers
107	SOV-8210G094	Solenoid valve, ASCO, 1/2", 120VAC	1	EA	BRS	Brass Body, for compaction zone spray
108	SOV-8210G054	Solenoid valve, ASCO, 1", 120VAC	1	EA	BRS	Brass Body, Hot Water Spray Bar
109	BV-1" 316 115V N4X V	Ball valve, 1" with Actuator, 115V DuraValve, NEMA4X PN: EA2104-NEMA-4X, V4000 2 piece 316SS Ball Valve	2	EA	316SS	One for Drum Spray, one for Screenings Flush.
110	MCS-FR692D	Motor Cutout Switch, Pizzato	1	EA	RESIN	Ordered w/ main unit
111	Assy Beast MultiTrod	Assembly, Bracket and MultiTrode conductivity rod, Level sensing	1	EA		
112	WS-F150-1"-BRZ	Y-Strainer, 1" NPT Female, 20 Mesh	1	EA	BRZ	
113	PG-4003K11	Pressure Gauge, 0-100 psi, 1/4" MNPT on bottom	1	EA	304SS	
114	WEC218286Z-CP01	Main Control Panel, 480/3/60, NEMA 4X	1	EA	304SS	
115	Plug-6" AUMA NEMA4X	DeZurik Plug Valve, 6" with Actuator, AUMA, NEMA4X/6, 1/120/60	1	EA	Buna	Plug Valve same as original unit
116	FSMP-Pressure Trans	FSMP-Pressure Trans	2	EA	304SS	For Inlet and Discharge Pump Ops
117	ASSY VFA Backpressure	Back Pressure Assy - Beast	1	EA	304SS	SS Mounting with SINT backpressure diaphargm
118	Wedgewire Basket	WAM278008201 (use half to fabricate)				
119	SPRY-BAR VFA HW01	Hot Water Spray Pipe, VFA-DM	1	EA		Spray Bar Assy - Added hotwater spray
120	PDP-FL518	Pump, Rotary Lobe Pump FL518 - Borger, Blue Line Series, BUNA-N seals, 6 inch ANSI Flange 10 HP	3	EA		One is Spare
121	PDP-RTD ASSY	Rotary Lobe Pump FL518 - RTD Assembly with Controller	3	EA		
122	Assy VFA DM 304Spray	Spray Wash Assembly	1	EA	304SS	assembly includes 2 ball valves
123	LABEL-BEAST-19.5 DIA	Label BEAST 19.5 Dia	2	EA	Vinyl	
124	LABEL-BEAST-NEXT GEN	Label BEAST NEXT GEN	2	EA	Vinyl	

Enviro-Care
A WAMGROUP® Company

Job Number: **WEC218286Z**
Job Name: **Opequon WRF - Fredrick-Winchester**
Revision:
Created Date: **2-Aug-19** Created By JW06

Line	Part Number	Part Name	Quantity	Unit	Material	Notes
125	LABEL-BEAST LUBE SCH	Label BEAST LUBE SCHEDULE	2	EA	ALUM	
126	LABEL-EC-2x5	Label EC 2 x 5	1	EA	Vinyl	
127	LABEL-FLO-LOGIC	Label-EC Flo-Logic Gurnee	2	EA	Vinyl	
128	LABEL-SAVI-QR CODE	LABEL-SAVI-QR CODE	2	EA	Vinyl	
129	NAMEPLATE	Nameplate	1	EA	ALUM	
130	LABEL-EC-4x12	Label EC 4 x 12	2	EA	Vinyl	
131						
132						

10-inch Gray PVC Pipe and Fittings
Pipe - 5 ft:
90 deg elb
10" Flange/Socket End
10"x6" Red
6" Flange/Socket End
6"x6"x3" Reducing Tee
3" x 2"(threaded) Hex Head
Reducing Bushing
Pipe Cement and Prime
10" Blind Flange

4-inch Gray PVC Pipe and Fittings
Pipe - 10 ft:
2x 45 deg elb
4" Flange/Socket End
6"x4" Red
6" Flange/Socket End
4"x4"x3" Reducing Tee
3" x 2"(threaded) Hex Head
Reducing Bushing
Pipe Cement and Prime

6-inch Gray PVC Pipe and Fittings
Pipe - 10 ft:
2x 45 deg elb
6" Flange/Socket End
2 x 90 deg elb
10" Flange/Socket End
10"x6" Red

Q:\Projects-EC Active\WEC218286Z Opequon WRF - Fredrick Winchester\7 Product Drawings\Submittal drawings\WEC218286Z

NOTES:

1. UNIT MATERIAL: DRUM: 304SS
   SPIRAL MATERIAL: HI-STRENGTH ALLOY STEEL

2. AREA CLASSIFICATION:
   SIMILAR TO PREVIOUS, TBD

3. DRUM DRIVE MOTOR: 2 HP, 460 V, 3 PH, 60 HZ (1800 RPM)
   AUGER MOTOR: 2 HP, 460 V, 3 PH, 60 HZ (3600 RPM)

4. BEAST WEIGHT - 3550 LB

5. WATER REQUIREMENTS:
   DRUM SPRAY WASH: 43 GPM @ 60-80 PSI
   HOT WATER SPRAY WASH: 33 GPM @ 40 PSI, 120° F

6. NOT SHOWN: ITEMS 117-118 AND 123-130. REFER TO PARTS LISTS FOR DESCRIPTIONS, MATERIAL, AND QUANTITIES.

7. PROVIDE SUFFICIENT FLEXIBILITY IN WATER AND ELECTRICAL CONNECTIONS TO ALLOW THE DRUM UNIT TO PIVOT OUT OF TANK. ALL INTER CONNECTING PIPING, WIRING, AND CONDUIT FROM UNIT-MOUNTED DEVICES WILL BE SUPPLIED BY OTHERS.

8. SCREEN BASKET MUST BE FREE DRAINING.

9. STRAINER AND WATER HAMMER ELIMINATOR (SHIPPED LOOSE) TO BE INSTALLED IN WASHWATER SUPPLY LINE BEFORE SPLITTING TO SUPPLY BEAST.

10. EQUIPMENT MUST BE PROTECTED TO PREVENT SURFACE CONTAMINATION. CONTAMINATION CAN COME FROM WELDING CUTTING, PAINTING AND OTHER SUCH ACTIVITIES IN THE AREA OF THE EQUIPMENT. STAINLESS STEEL SURFACES CONTAMINATED WITH ANY IRON, CHLORIDE CONTAINING MATERIAL AND OTHER SUBSTANCES CAN EXPERIENCE ACCELERATED SURFACE CORROSION AND PITTING.

11. IN ORDER TO PREVENT RUST ON 304SS, CHLORIDE CONTENT IN PROCESS WATER AND WASH WATER MUST BE < 200 MG/L, AND HYDROGEN SULFIDE (H2S) CONTENT MUST BE < 6 PPM.

12. DESIGN IS BASED ON FLOW PARAMETERS PROVIDED. IF THERE ARE SITE SPECIFIC HYDRAULIC REQUIREMENTS (SUCH AS MAXIMUM AND MINIMUM FLOWS), PLEASE CONSULT ENVIRO-CARE REPRESENTATIVE TO ENSURE THAT THE EQUIPMENT CAN MEET ALL REQUIREMENTS.

13. THE FOLLOWING DEVICES NEED TO BE FIELD WIRED BY ELECTRICAL CONTRACTOR
    - DRUM DRIVE MOTOR: ITEM 104 (QTY 1)
    - AUGER DRIVE MOTOR: ITEM 105 (QTY X)
    - MOTOR CUT OUT SWITCH: ITEM 110 (QTY 1)
    - SOLENOID VALVES: ITEM 107 (QTY 1), ITEM 108 (QTY 1)
    - ELECTRICALLY ACTUATED BALL VALVES: ITEM 109 (QTY 2)
    - CONTROL PANEL: ITEM 114 (QTY 1)
    - LEVEL SENSOR MULTITRODE: ITEM 111 (QTY 1)
    - ROTARY LOBE PUMP CONTROLLER: ITEM 121 (QTY 1)
    - PLUG VALVE: ITEM 115 (QTY 1)
    - ROTARY LOBE PUMP 120 (QTY 2),
    - PRESSURE TRANSDUCER: ITEM 116 (QTY 2)

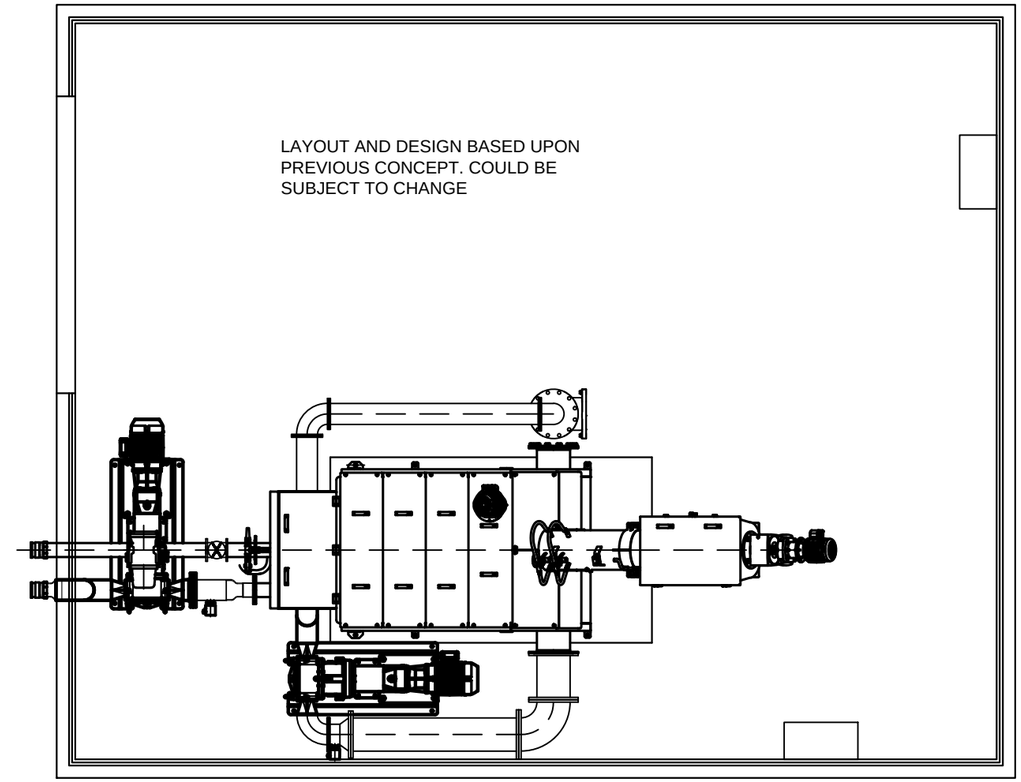

PLAN VIEW
SCALE 1:50

NOTES:

1. NBEC- NOT BY ENVIRO-CARE
2. CONCRETE, GROUT, INTERCONNECTING PIPING NOT BY ENVIRO-CARE
3. ALL INTERCONNECTING PIPING TO BE SELF SUPPORTING
4. PIPING BY ENVIRO-CARE IS GRAY PVC

PROCESS DESIGN INFORMATION:

APPLICATION:	HSOW/FOG RECEIVING
PEAK NOMINAL FLOW:	660 GPM @ 3-4% SOLIDS-ACTUAL FLOW RATE WILL BE DEPENDENT ON THE TOTAL TSS AND VISCOSITY OF THE INFLUENT MATERIAL
INFLUENT SOLIDS CONCENTRATION:	UP TO 15%
DRUM PERFORATED OPENING:	6 MM
NOMINAL SCREEN DRUM DIAMETER:	47 INCHES
NOMINAL SCREW CONVEYOR DIAMETER:	10 INCHES
SCREENING DISCHARGE HEIGHT:	5.1 FEET ABOVE OPERATING FLOOR
INLET PIPE SIZES:	(TWO) 4 INCH FLANGED
OUTLET PIPE SIZE:	10 INCH FLANGED

Status: FOR APPROVAL

Title
GENERAL ARRANGEMENT: OPEQUON WRF - FREDRICK WINCHESTER
BEAST-FLO-SEPTAGE STATION VFA-1200-DM

Rev	Revision Description	Date	Rev By	Approver
D				
C				
B				
A				

Enviro-Care
A WAMGROUP® Company

PROPERTY OF ENVIRO-CARE COMPANY. ALL RIGHTS RESERVED. NO PART OF THIS DRAWING MAY BE REPRODUCED IN ANY FORM WITHOUT WRITTEN PERMISSION FROM ENVIRO-CARE. ENVIRO-CARE COMPANY RESERVES THE RIGHT TO ALTER DATA OR THE DESIGN OF ITS EQUIPMENT AT ANY TIME WITHOUT PRIOR NOTICE AND WITHOUT ANY OBLIGATION WHATSOEVER.

Designer	Checker	Date	Sheet
RN23	JW06	08/26/2019	1 of 4

Third Angle Projection

Drawing Number: WEC218286Z

Revision: -

Q:\Projects-EC Active\WEC218286Z Opequon WRF - Fredrick Winchester\7 Product Drawings\Submittal drawings\WEC218286Z

NOTES:
1. NBEC- NOT BY ENVIRO-CARE
2. CONCRETE, GROUT, INTERCONNECTING PIPING NOT BY ENVIRO-CARE
3. ALL INTERCONNECTING PIPING TO BE SELF SUPPORTING
4. PIPING BY ENVIRO-CARE IS GRAY PVC

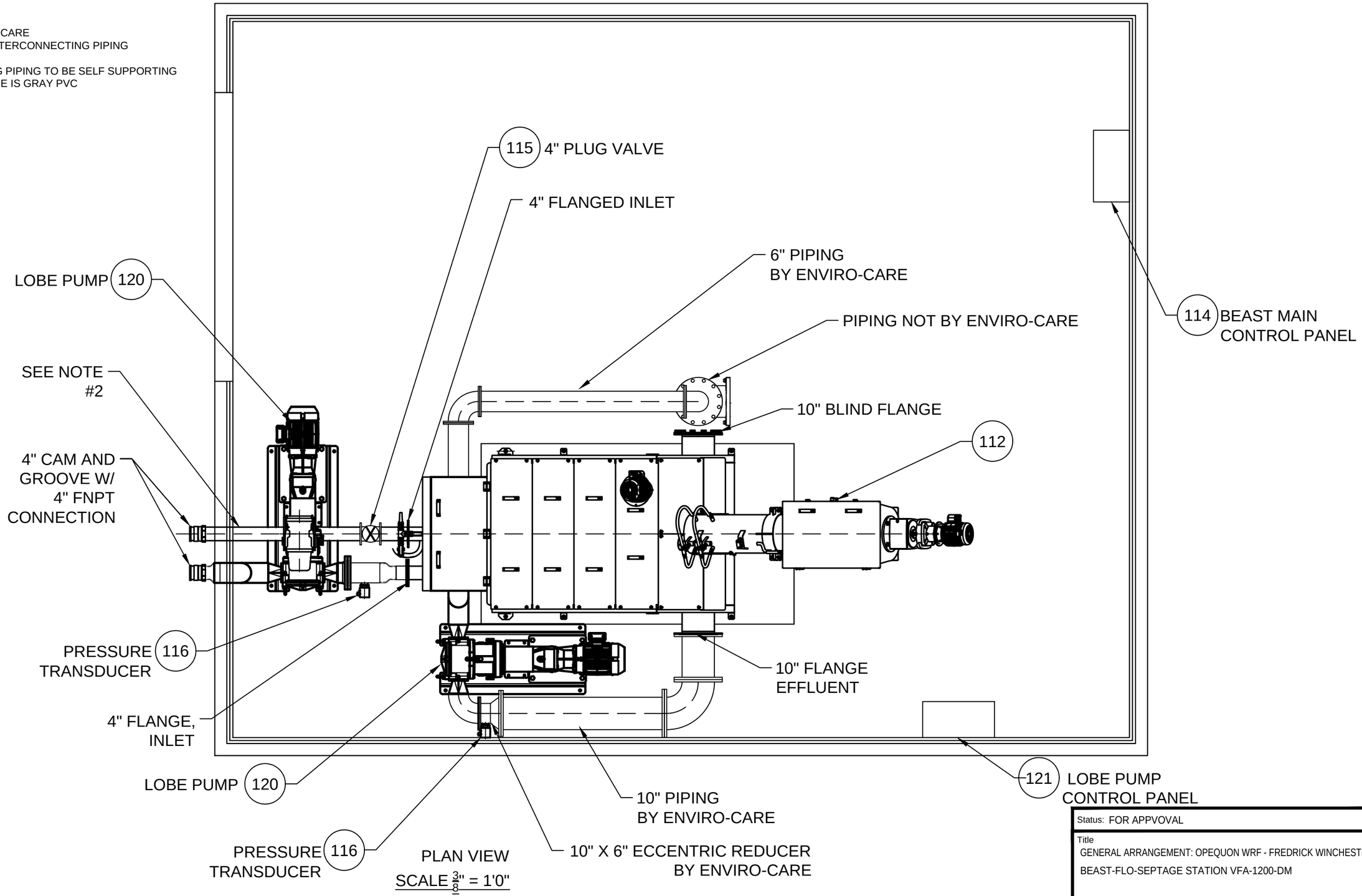

PLAN VIEW
SCALE $\frac{3}{8}$" = 1'0"

Rev	Revision Description	Date	Rev By	Approver
D				
C				
B				
A				

Enviro-Care
A WAMGROUP® Company

PROPERTY OF ENVIRO-CARE COMPANY. ALL RIGHTS RESERVED. NO PART OF THIS DRAWING MAY BE REPRODUCED IN ANY FORM WITHOUT WRITTEN PERMISSION FROM ENVIRO-CARE. ENVIRO-CARE COMPANY RESERVES THE RIGHT TO ALTER DATA OR THE DESIGN OF ITS EQUIPMENT AT ANY TIME WITHOUT PRIOR NOTICE AND WITHOUT ANY OBLIGATION WHATSOEVER.

Status: FOR APPVOVAL

Title
GENERAL ARRANGEMENT: OPEQUON WRF - FREDRICK WINCHESTER
BEAST-FLO-SEPTAGE STATION VFA-1200-DM

Designer	Checker	Date	Sheet
RN23	JW06	08/26/2019	2 of 4

Third Angle Projection

Drawing Number: WEC218286Z

Revision: -

Q:\Projects-EC Active\WEC218286Z Opequon WRF - Fredrick Winchester\7 Product Drawings\Submittal drawings\WEC218286Z

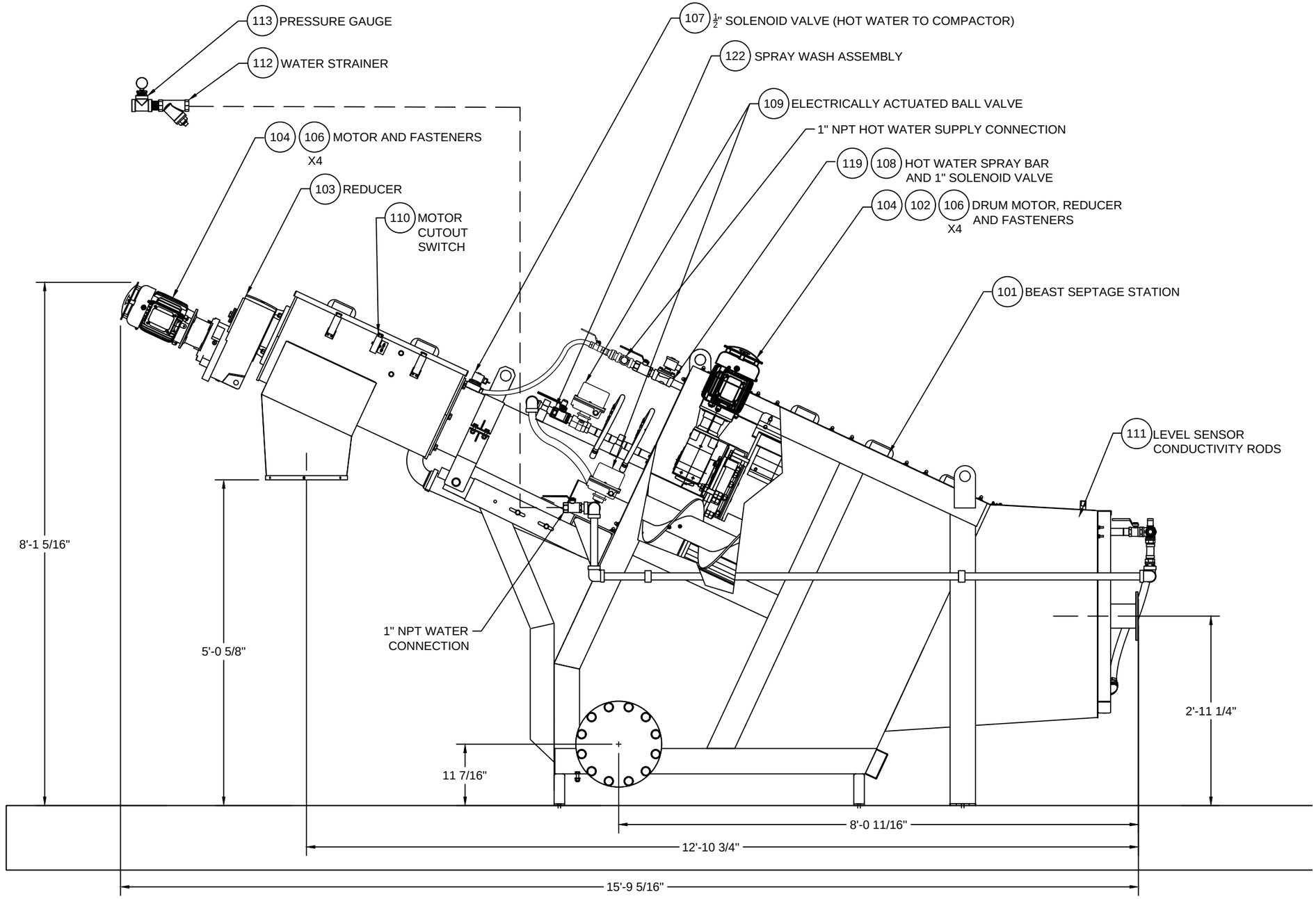

SIDE ELEVATION
SCALE 1:20

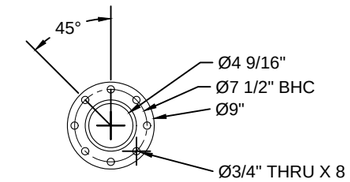

4" FLANGE
INFLUENT CONNECTION
SCALE 1:16

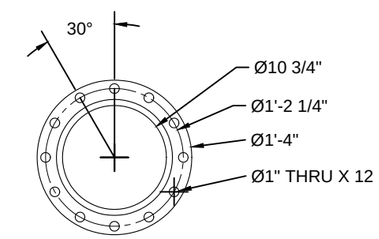

10" FLANGE
EFFLUENT CONNECTION
SCALE 1:16

Status: FOR APPROVAL

Title
GENERAL ARRANGEMENT: OPEQUON WRF - FREDRICK WINCHESTER
BEAST-FLO-SEPTAGE STATION VFA-1200-DM

Rev	Revision Description	Date	Rev By	Approver
D				
C				
B				
A				

Enviro-Care
A WAMGROUP® Company

PROPERTY OF ENVIRO-CARE COMPANY. ALL RIGHTS RESERVED. NO PART OF THIS DRAWING MAY BE REPRODUCED IN ANY FORM WITHOUT WRITTEN PERMISSION FROM ENVIRO-CARE. ENVIRO-CARE COMPANY RESERVES THE RIGHT TO ALTER DATA OR THE DESIGN OF ITS EQUIPMENT AT ANY TIME WITHOUT PRIOR NOTICE AND WITHOUT ANY OBLIGATION WHATSOEVER.

Designer	Checker	Date	Sheet
RN23	JW06	08/26/2019	3 of 4

Third Angle Projection

Drawing Number: WEC218286Z

Revision: -

Q:\Projects-EC Active\WEC218286Z Opequon WRF - Fredrick Winchester\7 Product Drawings\Submittal drawings\WEC218286Z

1. ENVIRO-CARE RESERVES PROPRIETARY RIGHTS TO THIS DRAWING AND THE DATA SHOWN THEREON, WHICH IS SUBMITTED IN CONFIDENCE.

2. IF APPLICABLE, A STAR DENOTES VARIANCE FROM CONTRACT DOCUMENTS AND SHOULD BE PARTICULARLY NOTED.

3. IF APPLICABLE, A CLOUD DENOTES DIMENSIONS WHICH ARE CRITICAL TO THE DESIGN OF THE EQUIPMENT, BUT NOT CLEAR AND/OR NOT PROVIDED IN THE CONTRACT DOCUMENTS.

4. THE FOLLOWING DEFINES THE RESPONSIBILITY OF ENVIRO-CARE WITH REGARD TO THE INFORMATION SHOWN ON THIS DRAWING.

   A. THIS DRAWING IS NOT TO BE USED FOR CONSTRUCTION OR INSTALLATION PURPOSES UNTIL IT HAS BEEN APPROVED BY THE OWNER, THE ENGINEER OR AN AUTHORIZED REPRESENTATIVE.

   B. DIMENSIONS, WEIGHTS, AND OTHER INFORMATION ARE PROVIDED TO ACCOMMODATE THE STRUCTURE TO THE EQUIPMENT AS SHOWN.

   C. ENVIRO-CARE IS NOT RESPONSIBLE FOR ANY CONCRETE STRUCTURE DESIGN. THE ENGINEER IS TO DETERMINE SIZES TO SUIT LOCAL REQUIREMENTS.

   D. ENVIRO-CARE IS NOT RESPONSIBLE FOR DAMAGE, INJURY OR LOSS RESULTING FROM USE OF THE SUPPLIED EQUIPMENT.

   E. CHARGES FOR MODIFICATIONS OR ADDITIONS TO THE EQUIPMENT WILL NOT BE ACCEPTED BY ENVIRO-CARE, UNLESS PRIOR APPROVAL HAS BEEN OBTAINED IN WRITING FROM AN AUTHORIZED ENVIRO-CARE REPRESENTATIVE.

5. ALL CONCRETE, GROUT, CONCRETE REINFORCING, SLIDE GATES, PIPING, VALVES, PIPE SUPPORTS OR FITTINGS, WALL BRACKETS, ELECTRICAL WIRING, CONDUIT, OR ELECTRICAL EQUIPMENT, ERECTION, FIELD PAINTING OR PAINT, FIELD WELDING OR WELD ROD, GREASE, OR LUBRICATING OIL, EXCEPT AS SPECIFICALLY NOTED IS TO BE BY OTHERS, NOT BY ENVIRO-CARE.

6. ALL ONSITE WELDING MUST CONFORM TO THE LATEST STANDARDS OF THE AMERICAN WELDING SOCIETY.

7. SEE PARTS LIST FOR ITEM IDENTIFICATION.

Rev	Revision Description	Date	Rev By	Approver
D				
C				
B				
A				

Enviro-Care
A WAMGROUP® Company

PROPERTY OF ENVIRO-CARE COMPANY. ALL RIGHTS RESERVED. NO PART OF THIS DRAWING MAY BE REPRODUCED IN ANY FORM WITHOUT WRITTEN PERMISSION FROM ENVIRO-CARE. ENVIRO-CARE COMPANY RESERVES THE RIGHT TO ALTER DATA OR THE DESIGN OF ITS EQUIPMENT AT ANY TIME WITHOUT PRIOR NOTICE AND WITHOUT ANY OBLIGATION WHATSOEVER.

Status: FOR APPROVAL

Title
GENERAL ARRANGEMENT: OPEQUON WRF - FREDRICK WINCHESTER
BEAST-FLO-SEPTAGE STATION VFA-1200-DM

Designer	Checker	Date	Sheet
RN23	SR08	08/26/2019	4 of 4

Third Angle Projection

Drawing Number: WEC218286Z

Revision: -

ELEMECH INC.
ELECTRICAL AND MECHANICAL ENGINEERING SERVICES

Submittal Comments

Project Name: **Frederick-Winchester, VA**
Project Number: **EVC7837**
Customer Project: **WEC218286Z**
Panel Type: **Beast Septage Receiving Control Panel**

August 20, 2019

The following comments are based on the Fredrick Winchester, VA Beast Septage Receiving control panel revision 0 submittal:

1. An Modicon M340 PLC and a Modicon Magelis 7.5" OIU have been provided and will be programmed with the following software:
   - PLC: Unity Pro XL
     - Ladder Diagram type only
   - OIU: Vijeo Designer
     - EleMech standard programming

2. Please provide Ethernet address information for the main control panel PLC and Operator Interface Unit.

2275 White Oak Circle
Aurora, IL 60504
Phone: 630-499-7080
Fax: 630-499-7760

This page intentionally left blank

Item No	Component	Description	Manufacturer Part Number	QTY	Device
Beast - Septage Receiving Control Panel (Quantity: 1)					
1	00-000-000	Wire, Hardware, Wire labels, etc.	EleMech: Miscellaneous	2	
2	10-069-000	Wireway Duct Cover, 1.5"W, 6 Ft. Section, w/Panduit F Series	Panduit: C1.5WH6	6	
3	10-069-001	Wireway Duct Cover, 1"W, 6 Ft. Section, w/Panduit F Series	Panduit: C1WH6	6	
4	10-069-002	Wireway Duct Cover, 2"W, 6 Ft. Section, w/Panduit F Series	Panduit: C2WH6	6	
5	10-069-005	Wireway Duct, 1.5"Wx3"H, 6 Foot Section	Panduit: F1.5X3WH6	6	
6	10-069-007	Wireway Duct, 1"Wx3"H, 6 Foot Section	Panduit: F1X3WH6	6	
7	10-069-008	Wireway Duct, 2"Wx3"H, 6 Foot Section	Panduit: F2X3WH6	6	
8	25-000-A001	Legendplate Assembly, Yellow E-Stop, Standard Encl.	EleMech: 25-000-A001 Assembly	1	
9	25-000-A002	Legendplate Assembly, White, Black Text, Standard Encl.	EleMech: 25-000-A002 Assembly	18	
10	25-000-A019	Nameplate Assembly, White: Power Supply - 3/60/480VAC	EleMech: 25-000-A019 Assembly	1	
11	42-063-007	Terminal Block, Din Rail, 35MM Wide, 15 High, 2 Meters Long	Iboco: Omega 3 AF	1	
12	51-000-062	Wire, MTW Type, 600V, 105°C, CSA/UL1015, Tinned Copper	EleMech: 51-000-062	1	
13	52-000-003	Label, Underwriters Laboratories 698A, w/Decal Set	EleMech: 698A	1	
14	18-000-002	Steel Barrier, 14Ga., 0.5"Wx10.0"x6.0"D, Standard	EleMech: 18-000-002	2	BAR1,2
15	03-058-153	Circuit Breaker, 3 Pole, 480VAC, 8A, 10kA, UL489, Type D	Square D: M9F43308	2	CB1,2
16	03-058-140	Circuit Breaker, 2 Pole, 480VAC, 8A, 10kA, UL489, Type D	Square D: M9F43208	1	CB3
17	03-058-126	Circuit Breaker, 1 Pole, 240VAC, 15A, 14kA, UL489, Type C	Square D: M9F42115	1	CB4
18	03-058-125	Circuit Breaker, 1 Pole, 240VAC, 10A, 14kA, UL489, Type C	Square D: M9F42110	2	CB5,6
19	03-058-123	Circuit Breaker, 1 Pole, 240VAC, 6A, 14kA, UL489, Type C	Square D: M9F42106	1	CB7
20	03-058-119	Circuit Breaker, 1 Pole, 240VAC, 2A, 14kA, UL489, Type C	Square D: M9F42102	2	CB8,9
21	57-009-010	Cable, Comm., Ethernet, Cat. 5, 600V,4 PAIR, 24AWG, 3.3 FT	Belden: E505001-010S1	1	CBL1
22	57-009-008	Cable, Comm., Ethernet, Cat. 5, 600V,4 PAIR, 24AWG, 6.6 FT	Belden: E505002-010S1	1	CBL2
23	06-058-011	Control Relay, 3PDT,120VAC, 11Pin Spade, Indicator, Operator	Square D: RXM3AB2F7	15	CR1-15
24	06-058-012	Control Relay, Bus Jumper, 2-Pole, w/Telemec. RXM Relay	Square D: RXZ S2	14	CR1-15
25	38-058-003	Socket, 11 Pin Spade, Din, Screw Term., 3Tier, 250V w/3-Pole	Square D: RXZE2S111M	15	CR1-15
26	42-063-004	Terminal Block, Ground, 30A, 600V, 6MM Wide, w/WK4/U	Wieland: 57.504.9055.0	7	DB,TB
27	07-063-000	Distribution Block, End Cover, 4 Pole, 300V,10A, w/WK4E\U\VB	Wieland: 07.311.4053.1	1	DB1
28	07-063-001	Distribution Block, Jumper, 4 Pole, 300V,10A, w/WK4E\U\VB	Wieland: Z7.210.3427	4	DB1
29	07-063-002	Distribution Block, Single Pole, 10A, 300V, WK4E\U\VB	Wieland: 57.404.6955.1	17	DB1
30	09-001-A010	Disconnect Assembly, Non-Fused, 60 Amp, NEMA 4X, 8-10" Depth	ABB: OT63F3 Assembly	1	DS1
31	11-000-340	Enclosure Drip Shield, Stainless Steel, Per Inch	EleMech: 11-000-340	36	EN1

Item No	Component	Description	Manufacturer Part Number	QTY	Device
32	11-000-A024	Wind Kit, Alum/Hinge, Wing Knob w/out Frame, 16"H x 12"W	EleMech: 11-000-A024	1	EN1
33	11-035-142	Sub-Panel, Painted Steel, w/48"Hx36"W C. Hinge Encl	Hoffman: A-48P36	1	EN1
34	11-035-724	Enclosure, Nema 4X, 304SS, 48"Hx36"Wx8"D, C. Hinge, 3-PT	Hoffman: A-48H3608SSLP3PT	1	EN1
35	15-011-000	Ground Lug, 14AWG - 4AWG	Blackburn: L70	2	GND
36	17-451-001	Heater, Silicone, Flat, 120VAC, 150 Watt, w/12" Lead, UL/CSA	Tempco: SHS80708	1	HTR1
37	52-137-003	Label, Caution: Heater Element, 1.5"Wx0.75"H, White/Red	Nameplate Tech: 52-137-003	1	HTR1
38	06-058-024	Control Relay, SPDT,120VAC, 5Pin Spade, Operator, 15A	Square D: RPM12F7	17	IR1-17
39	06-058-027	Control Relay Retension Clip, w/Telemec. RPM 1-Pole Relay	Square D: RPZR235	17	IR1-17
40	38-058-009	Socket, 5 Pin Spade, Din Mount, Screw Term., w/ RPM 1-Pole	Square D: RPZF1	17	IR1-17
41	52-137-002	Label, Multiple Supply Sources, Warning, 2.5"Wx1.5"H, Yellow	Nameplate Tech: 52-137-002	1	LBL1
42	52-137-001	Label, High Voltage, Danger, 6.5"Wx3.5"H, White/Black/Red	Nameplate Tech: 52-137-001	1	LBL2
43	34-001-003	PM, 1/3PH, 110-500VAC, 2-20A, 2)SPDT, 120VAC	ABB: 1SVR 450 330 R0100	2	LM1,2
44	100-237-001	Probe Sensor, 120VAC, 1NO/1NC, 10K Ohm, Open Type	Gems Sensors: 27A1E0	3	LR1-3
45	32-005-046	Lens, Pilot Light, White, NEMA 4X, Standard, w/A-B 800H	Allen-Bradley: 800T-N26W	1	LT1
46	32-005-048	Pilot light, NEMA 4X, 120VAC, Transformer, No Lens	Allen-Bradley: 800H-PR16	8	LT1-6,10,1
47	32-005-044	Lens, Pilot Light, Green, NEMA 4X, Standard, w/A-B 800H	Allen-Bradley: 800T-N26G	3	LT2,4,10
48	32-005-045	Lens, Pilot Light, Red, NEMA 4X, Standard, w/A-B 800H	Allen-Bradley: 800T-N26R	3	LT3,5,11
49	32-005-042	Lens, Pilot Light, Amber, NEMA 4X, Standard, w/A-B 800H	Allen-Bradley: 800T-N26A	1	LT6
50	22-005-010	Aux. Contact, Top mounted, 3NO/1NC, w/A-B 100C/104C	Allen-Bradley: 100-FA31	3	M1,2
51	22-005-012	Contactor, 3PH, Reversing, 9 Amp, 1NO Aux., 120VAC Coil	Allen-Bradley: 104-C09D22	1	M1-F/R
52	22-005-000	Contactor, 3PH, Non-Rev., 9 Amp, 1NO Aux., 120VAC Coil	Allen-Bradley: 100-C09D10	1	M2
53	22-001-007	Aux. Contact, Top Mounted, 1NO/1NC, w/ABB MS116 Series	ABB: HKF1-11	1	MMP1
54	22-001-019	Motor Starter, Manual, 2.5-4.0A w/ABB PSR	ABB: MS116-4.0	1	MMP1
55	25-000-A010	Nameplate Assembly, White, Black Text, 1"Hx3"W	EleMech: 25-000-A010 Assembly	2	NP1,2
56	25-000-A059	Nameplate Assem,Yellow: Intrinsic. Safe Circuits:Gem 27 Ser.	EleMech: 25-000-A059 Assembly	1	NP3
57	26-044-017	OIU, Magelis, 7.5", NEMA 4X Indoor, 24VDC, Touch, Ethernet	Modicon: HMIGTO4310	1	OIU1
58	EVC-292-P005	Program, OIU, Magelis, Standard	EleMech: EVC-292-P005	1	OIU1
59	28-005-037	Overload Relay, 3PH, Adj Class, 1.0-5.0A, w/100-C09...C23	Allen-Bradley: 193-EECB	2	OL1,2
60	29-005-117	Pushbutton, E-Stop, NEMA 4X, Oper+1NC, Twist Rel. Red Head	Allen-Bradley: 800H-TFRXT6D2	1	PB1
61	29-005-002	Pushbutton, NEMA 4X, Oper+1NO, Flush Head, Black	Allen-Bradley: 800H-AR2D1	1	PB2
62	33-044-127	M340, Discrete Input Module, 16 In, 120VAC	Modicon: BMXDAI1604	2	PLC1
63	33-044-132	M340, Power Supply Module 115/240VAC, 20W	Modicon: BMXCPS2000	1	PLC1

Item No	Component	Description	Manufacturer Part Number	QTY	Device
64	33-044-135	M340, Rack, 6 Slot	Modicon: BMXXBP0600	1	PLC1
65	33-044-138	M340, Processor, BMX, (1) Serial, (1) USB, (1) Ethernet, 4MB	Modicon: BMXP342020	1	PLC1
66	33-044-141	M340, Screw Terminal Block, 20 Point	Modicon: BMXFTB2000	5	PLC1
67	33-044-146	M340/M580, Protective Cover, Empty Slot, (5 Covers per pkg.)	Modicon: BMXXEM010 (see notes abou	1	PLC1
68	33-044-147	M340/M580, Discrete Output Module, 16 Out, 100/240VAC Relay	Modicon: BMXDRA1605	2	PLC1
69	EVC-292-P004	Program, PLC, Modicon M340, Standard	EleMech: EVC-292-P004	1	PLC1
70	37-323-009	Power Supply, 30W, 85-264VAC IN, 24VDC OUT, NEC Class 2	Delta: DRS-24V30W1NZ	1	PS1
71	88-001-002	Soft Starter, 3PH, Non-Rev., 6.1A, 208-600V	ABB: PSR6-600-70	1	SMS1
72	13-000-A000	Spare Parts Box Assembly, Din Rail Mount	EleMech: 13-000-A000 Assembly	1	SP1
73	39-005-009	Selector Switch, NEMA 4X, 3 Pos. Maintained, 1NO-1NC	Allen-Bradley: 800H-JR2A	8	SS1,2,4-9
74	39-005-011	Selector Switch, Nema 4X, 3 Pos. Spring Fr. Right, 1NO-1NC	Allen-Bradley: 800H-JR5A	1	SS3
75	40-170-A000	Suppressor Assembly, Metal Oxide Varister, 4500A Peak, 14MM	Littelfuse: V130LA10A Assembly	1	SUP1
76	40-030-002	Surge Suppressor, 1 Pole, 120VAC, 200kA SCCR, DIN	Mersen: STP120P07	1	SUR1
77	33-098-002	Ethernet Switch, 5TX, 9-32VDC, RJ45, 5 Port, 10/100	Phoenix: 2891152	1	SW1
78	41-018-A040	Transformer Assembly, 480/240-120VAC, 1.5KVA, 304SS	Cutler-Hammer: S20N11P16PSS Assemb	1	T1
79	42-063-000	Terminal Block, Labels, Custom Printed, w/WK4/U	Wieland: 04.242.6353-CUSTOM	196	TB,DB
80	42-063-009	Terminal Block, End Clamp, w/WKN10/U	Wieland: Z5.522.8553	7	TB,DB
81	42-063-008	Terminal Block, Labels, Blank, w/WK4/U-(600 tags per box)	Wieland: Z4.242.6353	22	TB1
82	42-063-015	Terminal Block, Jumper, w/WK4/U, 02 pole, Insulated	Wieland: Z7.281.1227	4	TB1
83	42-063-001	Terminal Block, End Plate, Gray, w/WK4/U	Wieland: 07.311.0155.0	3	TB1-3
84	42-063-003	Terminal Block, Single Pole Gray, 30A, 600V, 6MM Wide, WK4/U	Wieland: 57.504.0055.0	85	TB1-3
85	46-034-000	Thermostat, for heater control, N.C.contact, 6 amp,30-140 F.	Stego: 01140.9-00	1	TS1
LCS, 4 Hole, NEMA 4X 304SS, 3 LT, Alarm Horn (Quantity: 1)					
86	25-000-A002	Legendplate Assembly, White, Black Text, Standard Encl.	EleMech: 25-000-A002 Assembly	3	
87	01-005-005	Alarm Horn, Panel Mount, 120VAC, 45mm front, 22.5mm, NEMA 4X	Allen-Bradley: 855P-B10ME22	1	AH
88	11-035-009	Enclosure, NEMA 4X, 304SS, 10"Hx8"Wx4"D, Junction Box	Hoffman: A-1008CHNFSS	1	EN
89	32-005-042	Lens, Pilot Light, Amber, NEMA 4X, Standard, w/A-B 800H	Allen-Bradley: 800T-N26A	1	LT
90	32-005-044	Lens, Pilot Light, Green, NEMA 4X, Standard, w/A-B 800H	Allen-Bradley: 800T-N26G	1	LT
91	32-005-045	Lens, Pilot Light, Red, NEMA 4X, Standard, w/A-B 800H	Allen-Bradley: 800T-N26R	1	LT
92	32-005-048	Pilot light, NEMA 4X, 120VAC, Transformer, No Lens	Allen-Bradley: 800H-PR16	3	LT
Spare Parts / Ship Loose (Total Quantity Provided)					
93	61-000-012	Labor, Engineering, Submittal, Schematics, BOM	EleMech: 61-000-012	1	

Z:\Enviro-Care\7800\EVC7837 - Fredrick Winchester, VA\Submittal\EVC7837A1

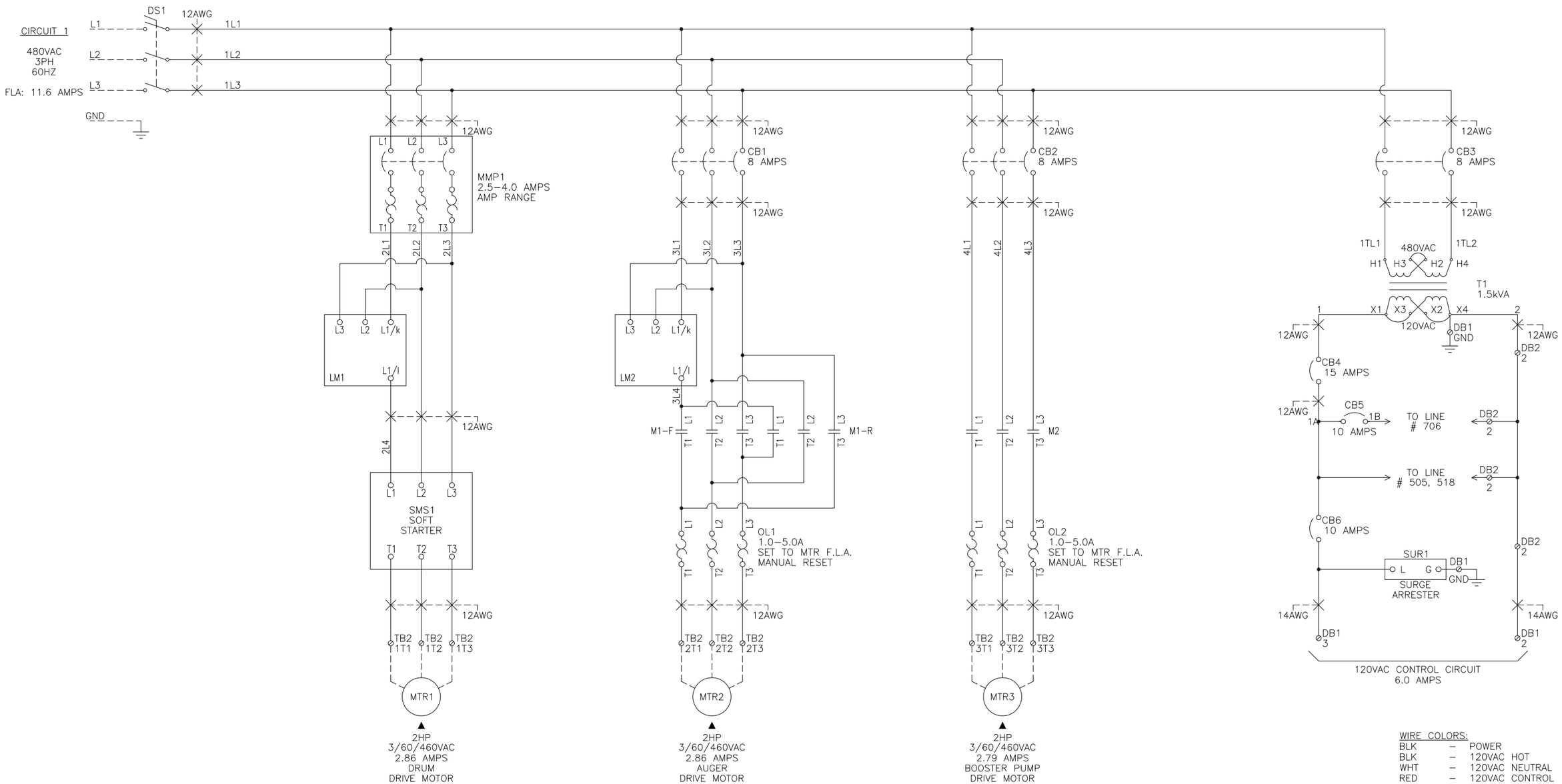

WIRE COLORS:

BLK	–	POWER
BLK	–	120VAC HOT
WHT	–	120VAC NEUTRAL
RED	–	120VAC CONTROL
YEL	–	REMOTE
GRN	–	GROUND
BLU	–	DC POSITIVE/CONTROL
WHT/BLU	–	DC NEUTRAL

NOTES:

1. ▲ DEVICES LOCATED OUTSIDE CONTROL PANEL.
2. ⊘ TERMINAL BLOCK (TB) OR DISTRIBUTION BLOCK (DB) LOCATED IN CONTROL PANEL.
3. ■ TERMINAL BLOCK (TB) OR DISTRIBUTION BLOCK (DB) LOCATED IN VALVE STATION.
4. – – FIELD WIRING.
5. CONTROL PANEL WIRING SHALL BE MTW TYPE, TINNED COPPER, 600V, 105°C, UL1015/CSA.
6. NAMEPLATES SHALL BE WHITE WITH BLACK LETTERS.
7. ELEMECH RESERVES THE RIGHT TO CHANGE, AS NECESSARY, THE SPACING, ORIENTATION, AND PHYSICAL LOCATION OF DEVICES IN ORDER TO OPTIMIZE THE DESIGN.
8. LOCAL MOTOR DISCONNECT SWITCHES SHALL BE PROVIDED BY OTHERS IF REQUIRED BY LOCAL REGULATIONS.
9. JUNCTION BOXES ARE NOT SHOWN AND SHALL BE PROVIDED BY OTHERS AS NECESSARY.
10. ∗ CONTACTS FOR MANUAL MOTOR PROTECTOR (MMP1) SHOWN IN UN–POWERED, OFF STATE

Rev	Revision Description	Date	Rev By	Approver

Enviro-Care
A WAMGROUP® Company

PROPERTY OF ENVIRO-CARE COMPANY. ALL RIGHTS RESERVED. NO PART OF THIS DRAWING MAY BE REPRODUCED IN ANY FORM WITHOUT WRITTEN PERMISSION FROM ENVIRO-CARE. ENVIRO-CARE COMPANY RESERVES THE RIGHT TO ALTER DATA OR THE DESIGN OF ITS EQUIPMENT AT ANY TIME WITHOUT PRIOR NOTICE AND WITHOUT ANY OBLIGATION WHATSOEVER.

Status: FOR APPROVAL

Title
CONTROL PANEL: 3/60/480
BEAST LIQUID WASTE RECEIVING SYSTEM
MAIN CONTROL PANEL

Designer	Checker	Date	Sheet
MBS	ALS	08/14/19	1 of 12

Third Angle Projection

Drawing Number: WEC218286Z-CP01

Revision: 0

ELEMECH PROJECT: EVC7837A1

Z:\Enviro-Care\7800\EVC7837 - Fredrick Winchester, VA\Submittal\EVC7837A2

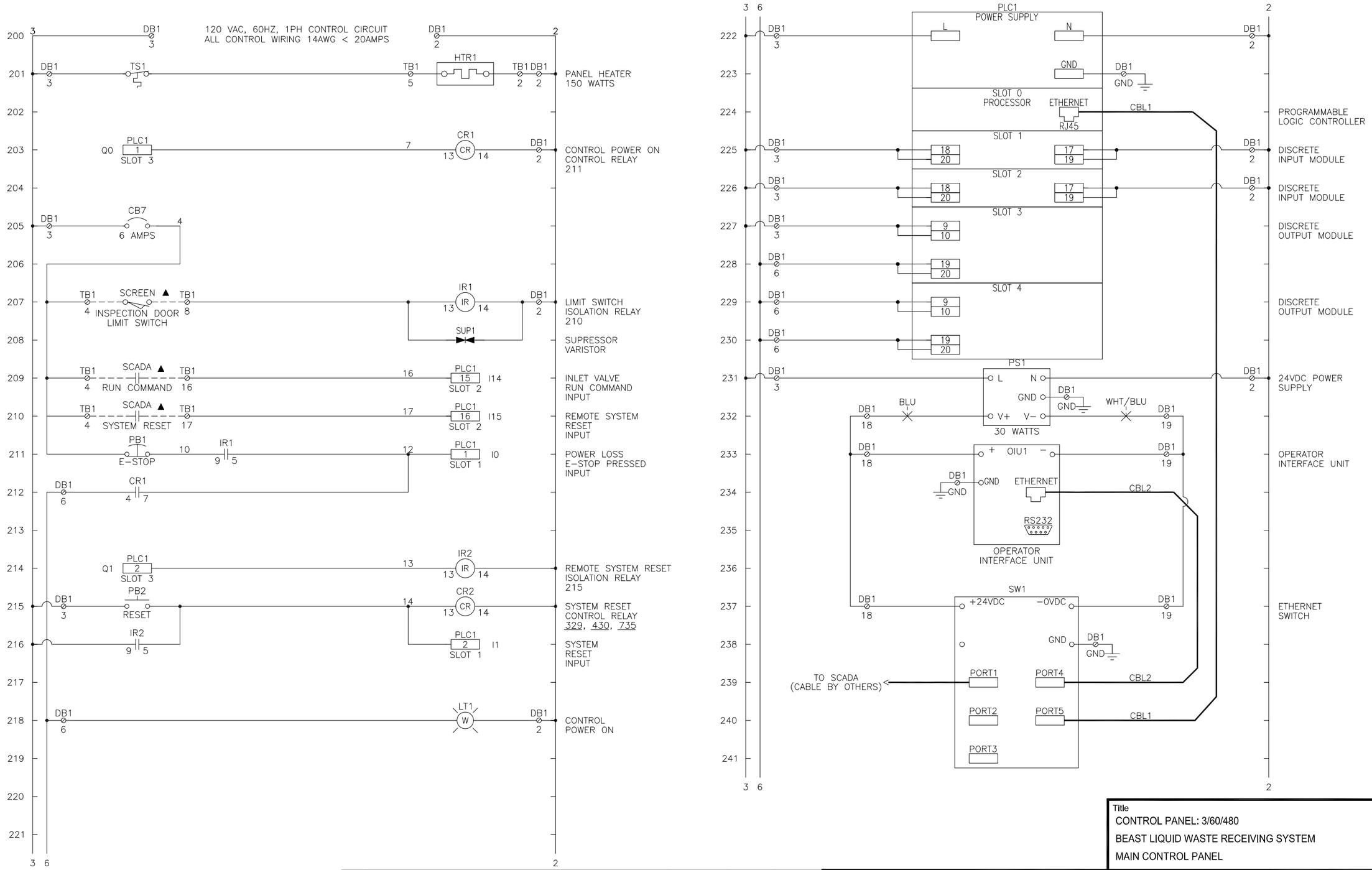

Rev	Revision Description	Date	Rev By	Approver

Enviro-Care
A WAMGROUP® Company

PROPERTY OF ENVIRO-CARE COMPANY. ALL RIGHTS RESERVED. NO PART OF THIS DRAWING MAY BE REPRODUCED IN ANY FORM WITHOUT WRITTEN PERMISSION FROM ENVIRO-CARE. ENVIRO-CARE COMPANY RESERVES THE RIGHT TO ALTER DATA OR THE DESIGN OF ITS EQUIPMENT AT ANY TIME WITHOUT PRIOR NOTICE AND WITHOUT ANY OBLIGATION WHATSOEVER.

Title
CONTROL PANEL: 3/60/480
BEAST LIQUID WASTE RECEIVING SYSTEM
MAIN CONTROL PANEL

Designer	Checker	Date	Sheet
MBS	ALS	08/14/19	2 of 12

Third Angle Projection

Drawing Number: WEC218286Z-CP01

Revision: 0

ELEMECH PROJECT: EVC7837A2

Z:\Enviro-Care\7800\EVC7837 - Fredrick Winchester, VA\Submittal\EVC7837A3

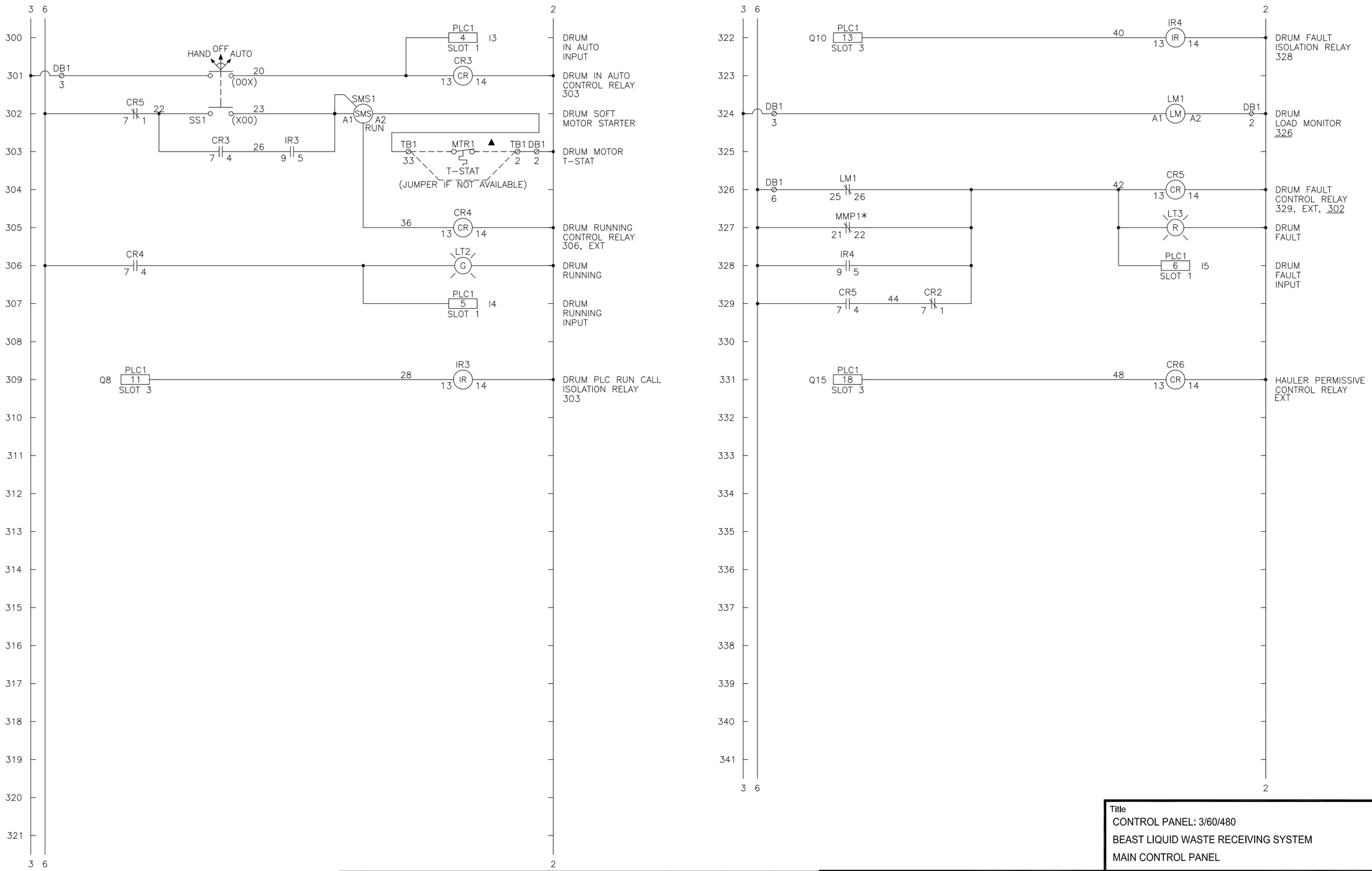

Rev	Revision Description	Date	Rev By	Approver

Enviro-Care
A WAMGROUP® Company

PROPERTY OF ENVIRO-CARE COMPANY. ALL RIGHTS RESERVED. NO PART OF THIS DRAWING MAY BE REPRODUCED IN ANY FORM WITHOUT WRITTEN PERMISSION FROM ENVIRO-CARE. ENVIRO-CARE COMPANY RESERVES THE RIGHT TO ALTER DATA OR THE DESIGN OF ITS EQUIPMENT AT ANY TIME WITHOUT PRIOR NOTICE AND WITHOUT ANY OBLIGATION WHATSOEVER.

Title
CONTROL PANEL: 3/60/480
BEAST LIQUID WASTE RECEIVING SYSTEM
MAIN CONTROL PANEL

Designer	Checker	Date	Sheet
MBS	ALS	08/14/19	3 of 12

Third Angle Projection

Drawing Number: WEC218286Z-CP01

Revision: 0

ELEMECH PROJECT: EVC7837A3

Z:\Enviro-Care\7800\EVC7837 - Fredrick Winchester, VA\Submittal\EVC7837A4

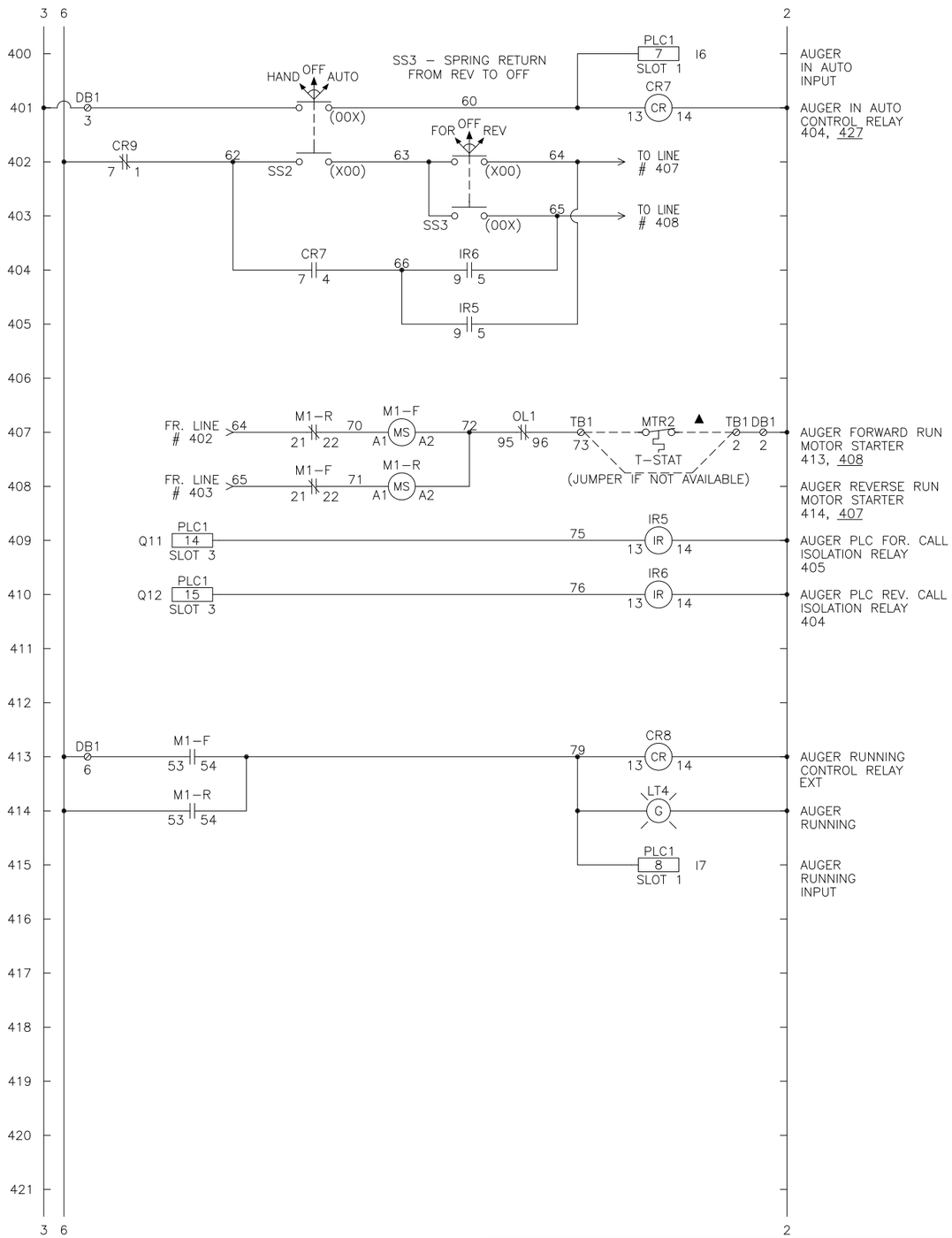

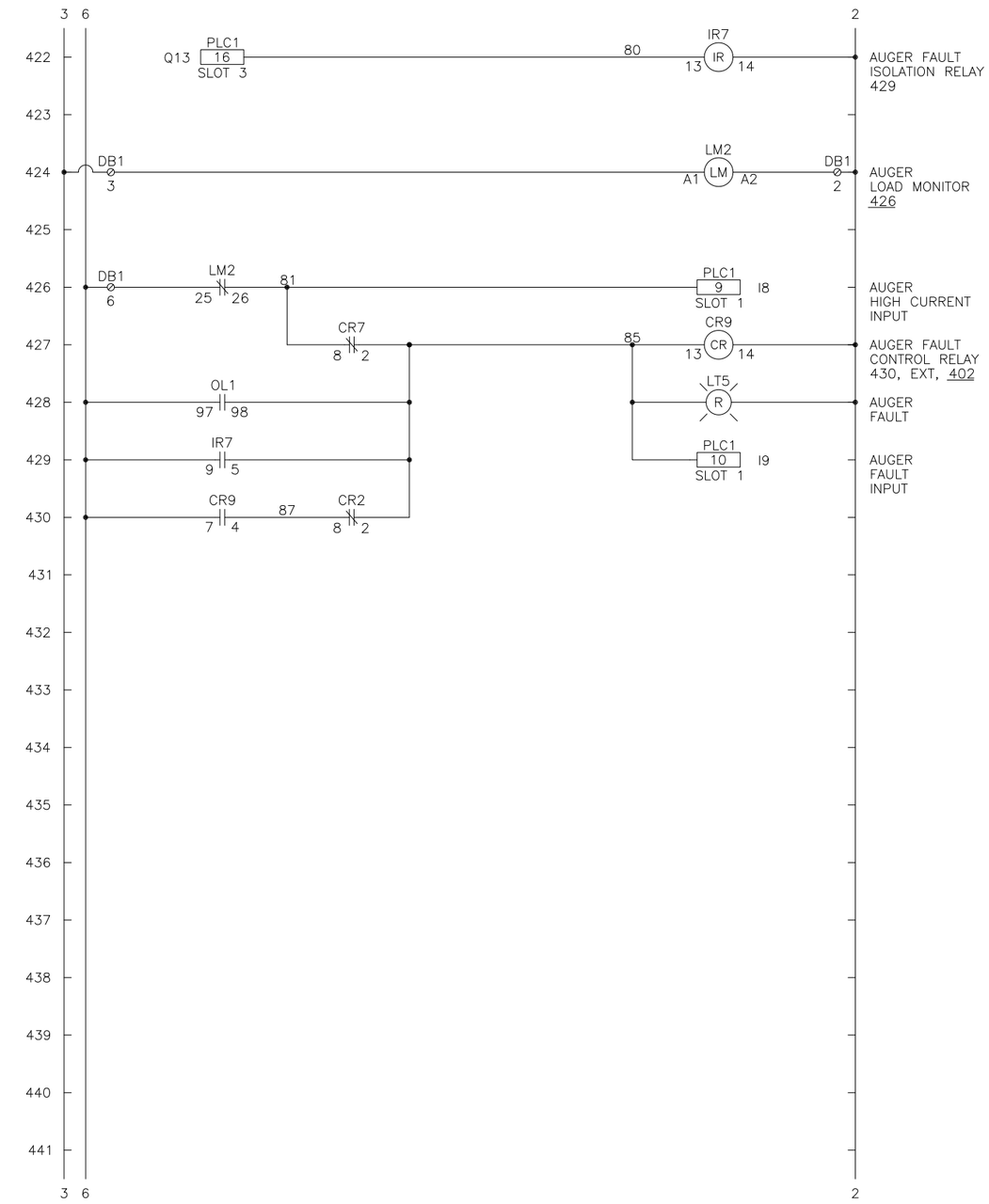

Rev	Revision Description	Date	Rev By	Approver

Enviro-Care
A WAMGROUP® Company

PROPERTY OF ENVIRO-CARE COMPANY. ALL RIGHTS RESERVED. NO PART OF THIS DRAWING MAY BE REPRODUCED IN ANY FORM WITHOUT WRITTEN PERMISSION FROM ENVIRO-CARE. ENVIRO-CARE COMPANY RESERVES THE RIGHT TO ALTER DATA OR THE DESIGN OF ITS EQUIPMENT AT ANY TIME WITHOUT PRIOR NOTICE AND WITHOUT ANY OBLIGATION WHATSOEVER.

Title
CONTROL PANEL: 3/60/480
BEAST LIQUID WASTE RECEIVING SYSTEM
MAIN CONTROL PANEL

Designer	Checker	Date	Sheet
MBS	ALS	08/14/19	4 of 12

Third Angle Projection

Drawing Number: WEC218286Z-CP01

Revision: 0

Z:\Enviro-Care\7800\EVC7837 - Fredrick Winchester, VA\Submittal\EVC7837A5

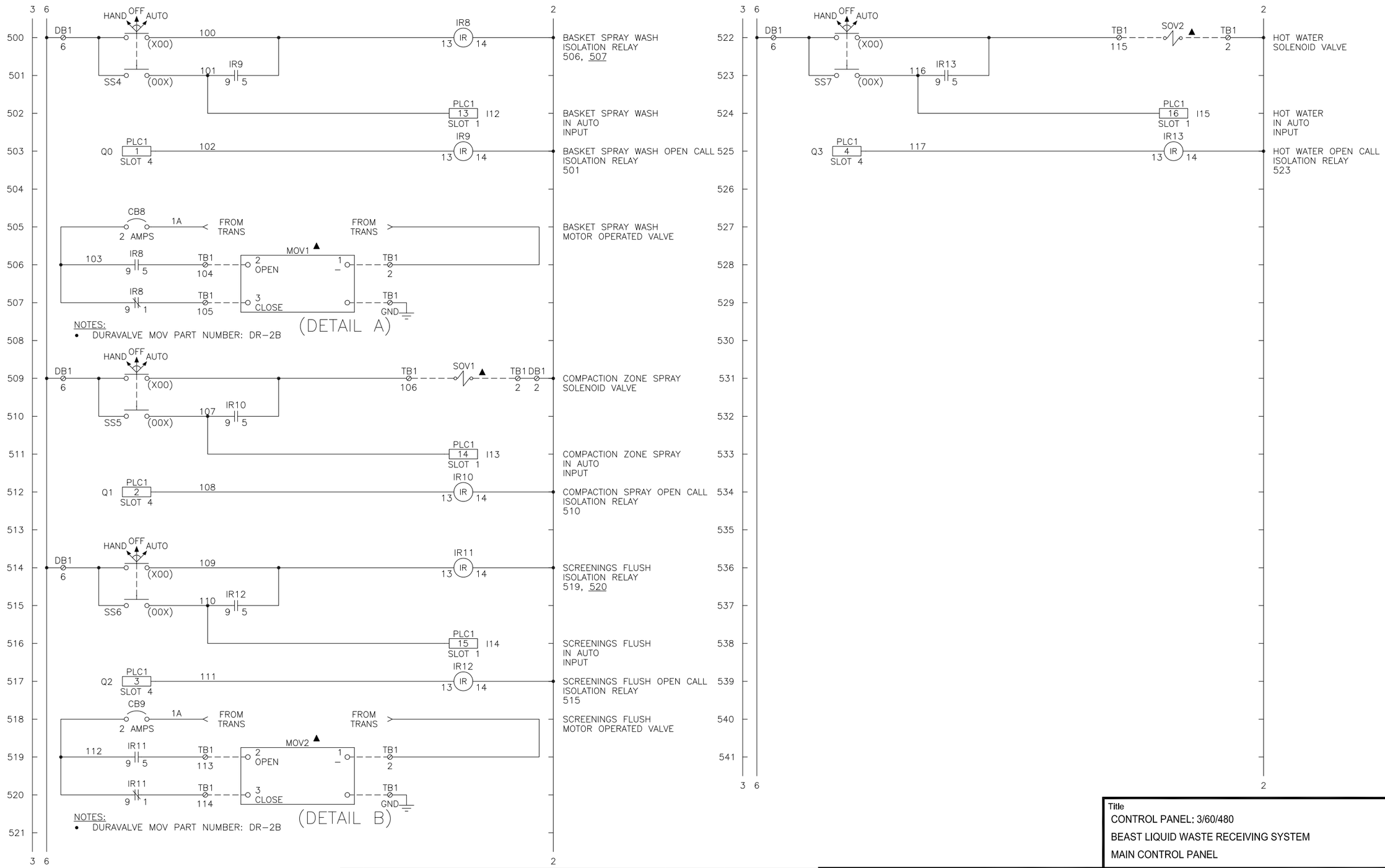

Rev	Revision Description	Date	Rev By	Approver

Enviro-Care
A WAMGROUP® Company

PROPERTY OF ENVIRO-CARE COMPANY. ALL RIGHTS RESERVED. NO PART OF THIS DRAWING MAY BE REPRODUCED IN ANY FORM WITHOUT WRITTEN PERMISSION FROM ENVIRO-CARE. ENVIRO-CARE COMPANY RESERVES THE RIGHT TO ALTER DATA OR THE DESIGN OF ITS EQUIPMENT AT ANY TIME WITHOUT PRIOR NOTICE AND WITHOUT ANY OBLIGATION WHATSOEVER.

Title
CONTROL PANEL: 3/60/480
BEAST LIQUID WASTE RECEIVING SYSTEM
MAIN CONTROL PANEL

Designer	Checker	Date	Sheet
MBS	ALS	08/14/19	5 of 12

Third Angle Projection

Drawing Number: WEC218286Z-CP01

Revision: 0

ELEMECH PROJECT: EVC7837A5

Z:\Enviro-Care\7800\EVC7837 - Fredrick Winchester, VA\Submittal\EVC7837A6

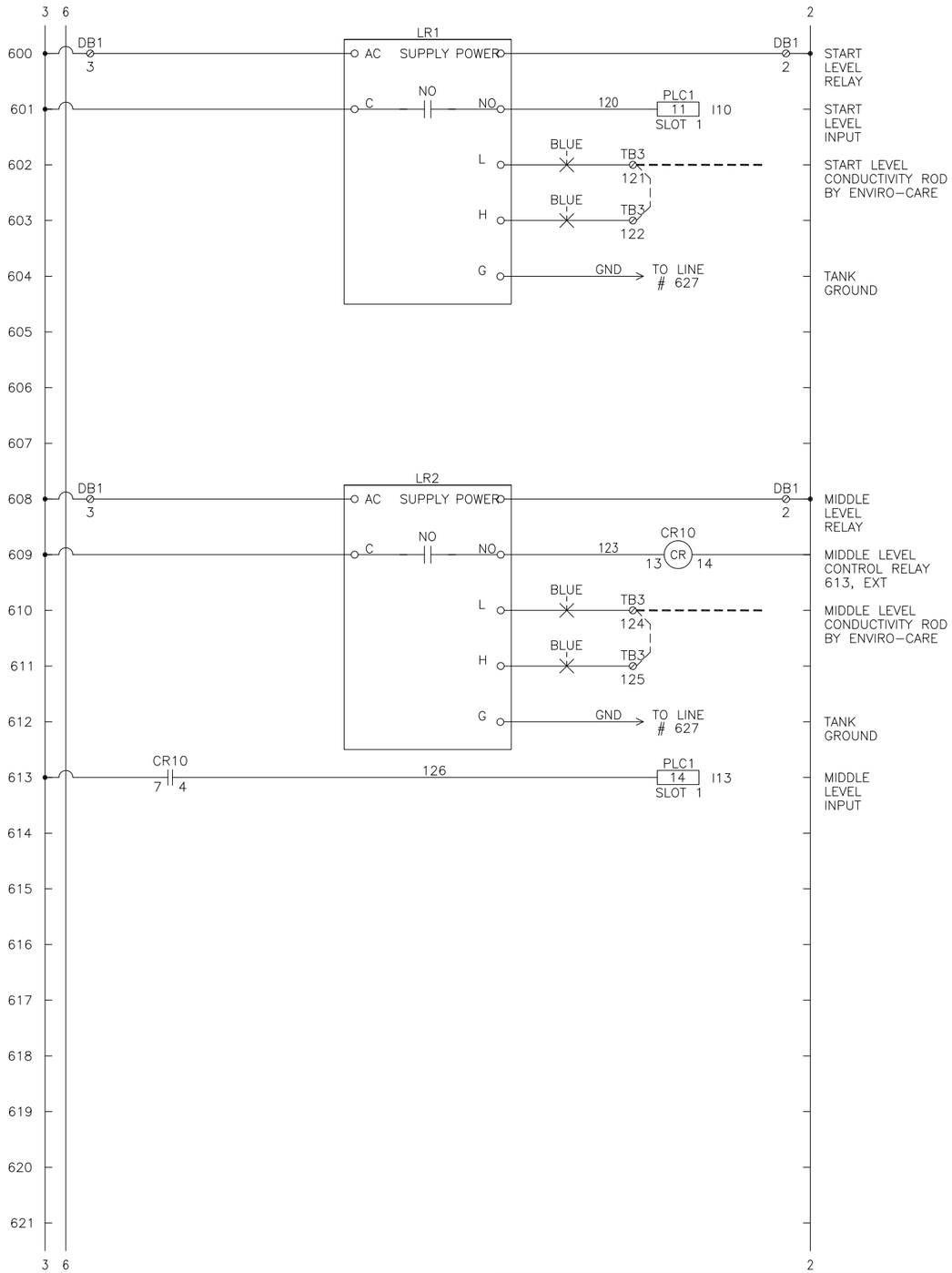

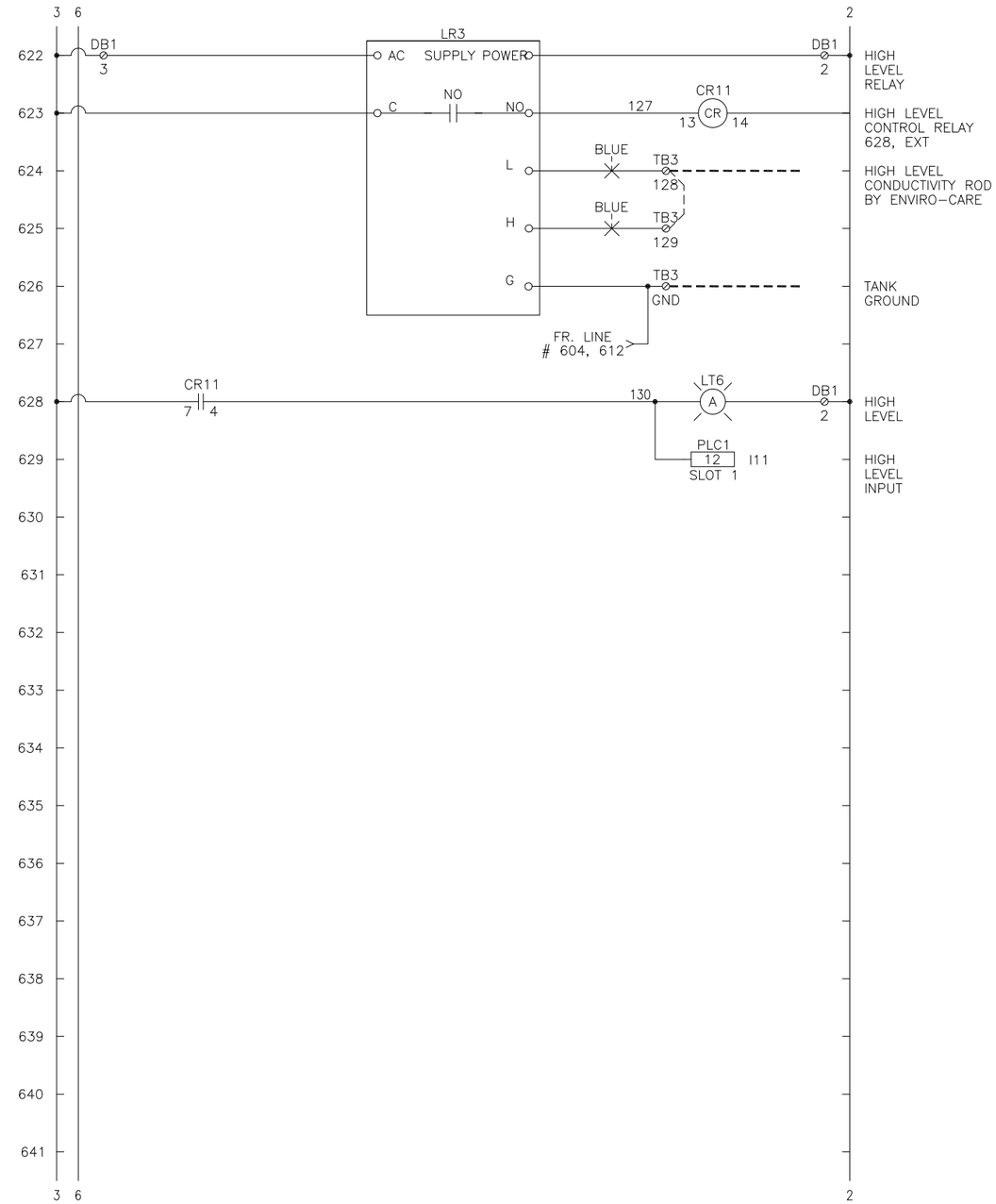

Rev	Revision Description	Date	Rev By	Approver

Enviro-Care
A WAMGROUP® Company

PROPERTY OF ENVIRO-CARE COMPANY. ALL RIGHTS RESERVED. NO PART OF THIS DRAWING MAY BE REPRODUCED IN ANY FORM WITHOUT WRITTEN PERMISSION FROM ENVIRO-CARE. ENVIRO-CARE COMPANY RESERVES THE RIGHT TO ALTER DATA OR THE DESIGN OF ITS EQUIPMENT AT ANY TIME WITHOUT PRIOR NOTICE AND WITHOUT ANY OBLIGATION WHATSOEVER.

Title
CONTROL PANEL: 3/60/480
BEAST LIQUID WASTE RECEIVING SYSTEM
MAIN CONTROL PANEL

Designer	Checker	Date	Sheet
MBS	ALS	08/14/19	6 of 12

Third Angle Projection

Drawing Number: WEC218286Z-CP01

Revision: 0

ELEMECH PROJECT: EVC7837A6

Z:\Enviro-Care\7800\EVC7837 - Fredrick Winchester, VA\Submittal\EVC7837A7

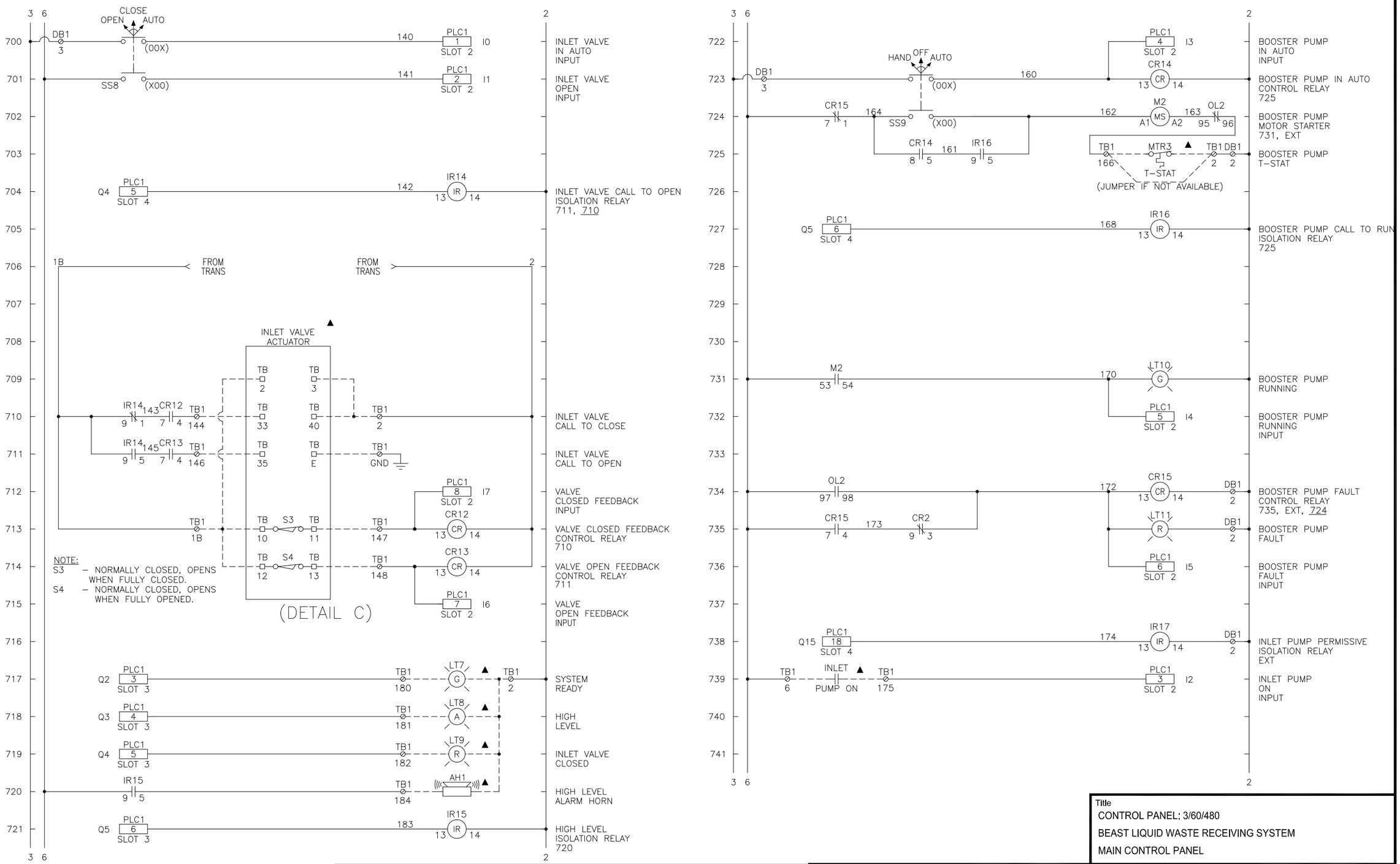

Rev	Revision Description	Date	Rev By	Approver

Title
CONTROL PANEL: 3/60/480
BEAST LIQUID WASTE RECEIVING SYSTEM
MAIN CONTROL PANEL

Enviro-Care
A WAMGROUP® Company

PROPERTY OF ENVIRO-CARE COMPANY. ALL RIGHTS RESERVED. NO PART OF THIS DRAWING MAY BE REPRODUCED IN ANY FORM WITHOUT WRITTEN PERMISSION FROM ENVIRO-CARE. ENVIRO-CARE COMPANY RESERVES THE RIGHT TO ALTER DATA OR THE DESIGN OF ITS EQUIPMENT AT ANY TIME WITHOUT PRIOR NOTICE AND WITHOUT ANY OBLIGATION WHATSOEVER.

Designer	Checker	Date	Sheet
MBS	ALS	08/14/19	7 of 12

Third Angle Projection

Drawing Number: WEC218286Z-CP01

Revision: 0

Z:\Enviro-Care\7800\EVC7837 - Fredrick Winchester, VA\Submittal\EVC7837A8

FIELD WIRING DIAGRAM

WARNING:
DAMAGE RESULTING FROM INSTALLATION OF TOP ENTRY CONDUIT WILL VOID WARRANTY
- USE PROPER FITTINGS, MYERS TYPE 4 OR EQUAL
- PROTECT INTERIOR DEVICES FROM INSTALLATION DEBRIS
- CONDUIT MUST BE SEALED WATERTIGHT TO PREVENT WATER ENTRY

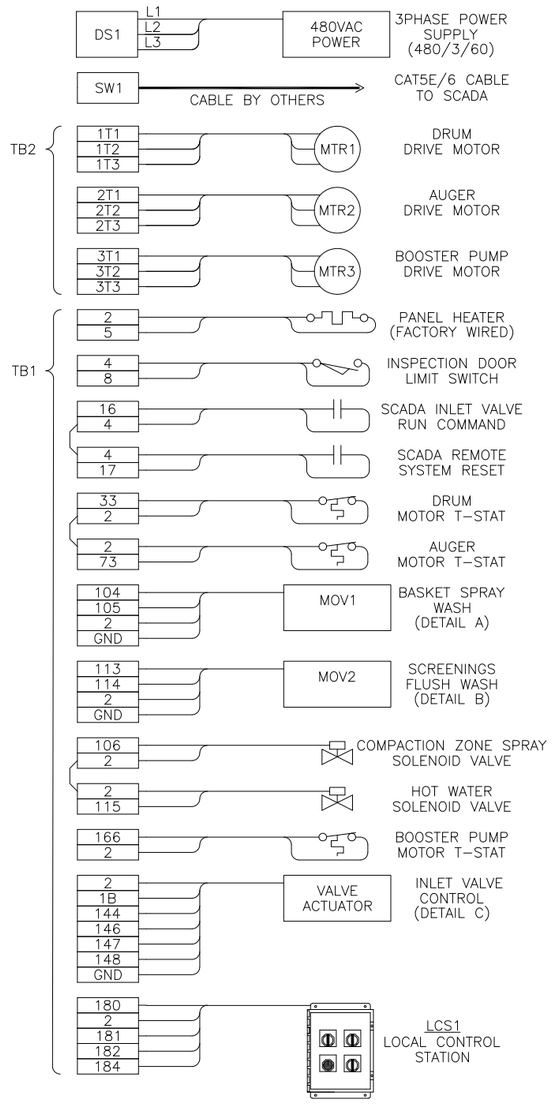

FIELD WIRING DIAGRAM

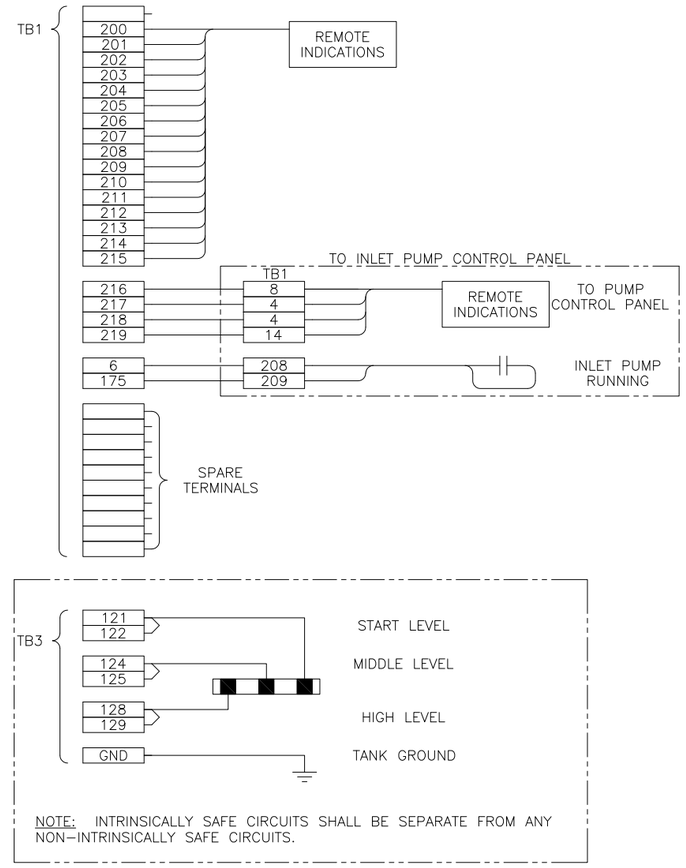

NOTE: INTRINSICALLY SAFE CIRCUITS SHALL BE SEPARATE FROM ANY NON-INTRINSICALLY SAFE CIRCUITS.

DRY OUTPUT CONTACTS

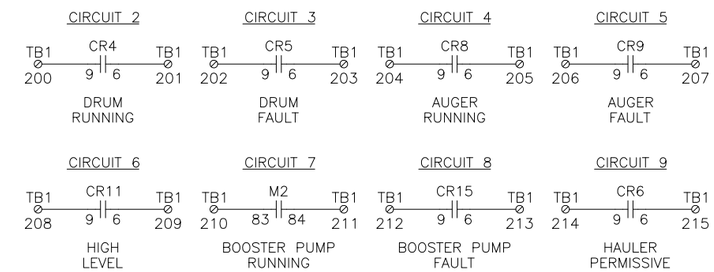

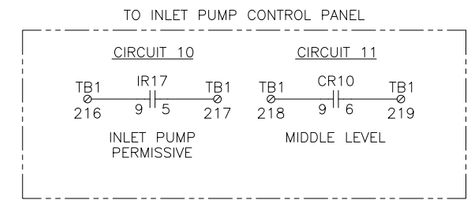

MAX. CONTROLLED LOAD: 10A @ 120VAC

NOTE: BRANCH CIRCUIT PROTECTION PROVIDED BY OTHERS PER N.E.C.

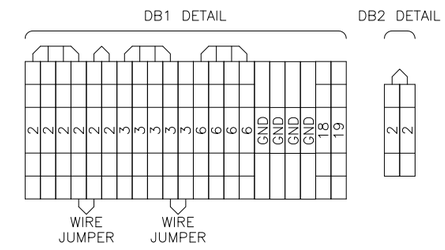

Rev	Revision Description	Date	Rev By	Approver

Enviro-Care
A WAMGROUP® Campany

PROPERTY OF ENVIRO-CARE COMPANY. ALL RIGHTS RESERVED. NO PART OF THIS DRAWING MAY BE REPRODUCED IN ANY FORM WITHOUT WRITTEN PERMISSION FROM ENVIRO-CARE. ENVIRO-CARE COMPANY RESERVES THE RIGHT TO ALTER DATA OR THE DESIGN OF ITS EQUIPMENT AT ANY TIME WITHOUT PRIOR NOTICE AND WITHOUT ANY OBLIGATION WHATSOEVER.

Title
CONTROL PANEL: 3/60/480
BEAST LIQUID WASTE RECEIVING SYSTEM
MAIN CONTROL PANEL

Designer	Checker	Date	Sheet
MBS	ALS	08/14/19	8 of 12

Third Angle Projection

Drawing Number: WEC218286Z-CP01

Revision: 0

ELEMECH PROJECT: EVC7837A8

Z:\Enviro-Care\7800\EVC7837 - Fredrick Winchester, VA\Submittal\EVC7837A9

PROBE SENSOR WIRING DETAIL

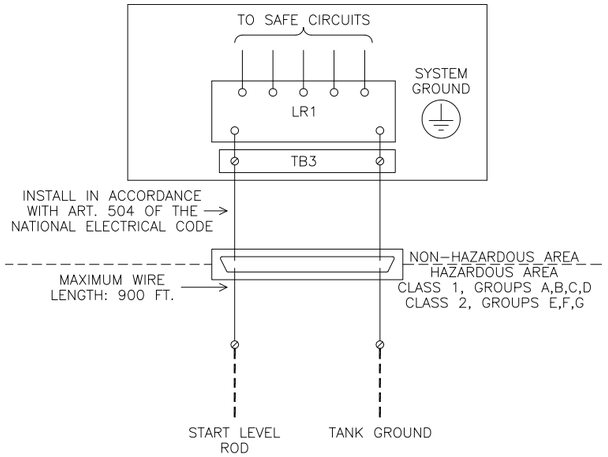

NOTES:
1. ENSURE CONTROL PANEL IS CONNECTED TO GROUND.
2. CAUTION: MAINTAIN SEPARATION BETWEEN INTRINSICALLY SAFE WIRING AND OTHER WIRING.

PROBE SENSOR WIRING DETAIL

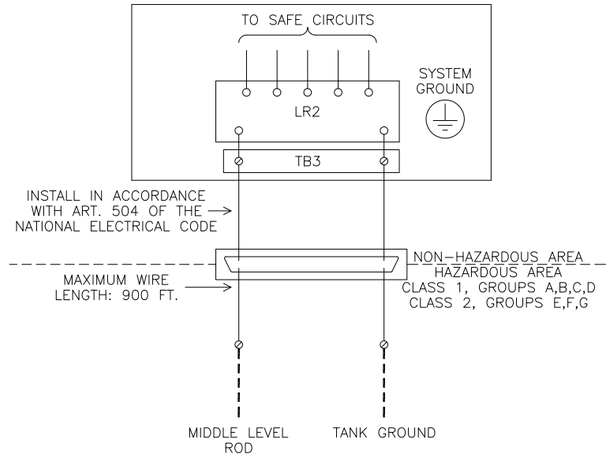

NOTES:
1. ENSURE CONTROL PANEL IS CONNECTED TO GROUND.
2. CAUTION: MAINTAIN SEPARATION BETWEEN INTRINSICALLY SAFE WIRING AND OTHER WIRING.

PROBE SENSOR WIRING DETAIL

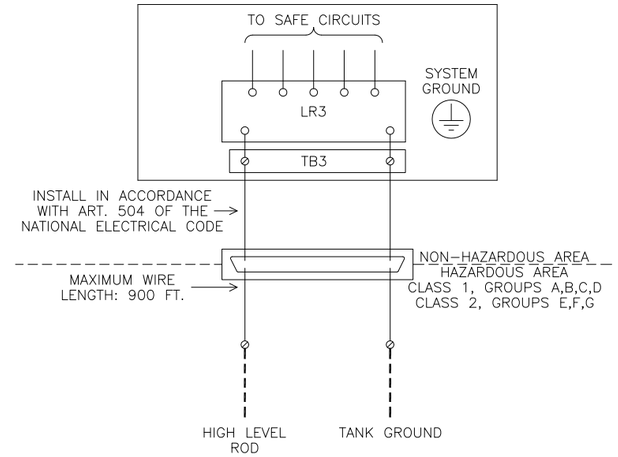

NOTES:
1. ENSURE CONTROL PANEL IS CONNECTED TO GROUND.
2. CAUTION: MAINTAIN SEPARATION BETWEEN INTRINSICALLY SAFE WIRING AND OTHER WIRING.

Rev	Revision Description	Date	Rev By	Approver

Enviro-Care
A WAMGROUP® Company

PROPERTY OF ENVIRO-CARE COMPANY. ALL RIGHTS RESERVED. NO PART OF THIS DRAWING MAY BE REPRODUCED IN ANY FORM WITHOUT WRITTEN PERMISSION FROM ENVIRO-CARE. ENVIRO-CARE COMPANY RESERVES THE RIGHT TO ALTER DATA OR THE DESIGN OF ITS EQUIPMENT AT ANY TIME WITHOUT PRIOR NOTICE AND WITHOUT ANY OBLIGATION WHATSOEVER.

Title
CONTROL PANEL: 3/60/480
BEAST LIQUID WASTE RECEIVING SYSTEM
MAIN CONTROL PANEL

Designer	Checker	Date	Sheet
MBS	ALS	08/14/19	9 of 12

Third Angle Projection

Drawing Number: WEC218286Z-CP01

Revision: 0

ELEMECH PROJECT: EVC7837A9

Z:\Enviro-Care\7800\EVC7837 - Fredrick Winchester, VA\Submittal\EVC7837A10

DEVICE SETTINGS

BMX P34 2020	DISCRETE IN	DISCRETE OUT
☐ RUN ☐ ERR	0 1 2 3	0 1 2 3
☐ I/O	4 5 6 7	4 5 6 7
☐ SER COM	8 9 10 11	8 9 10 11
☐ CARD ERR	12 13 14 15	12 13 14 15
☐ ETH ACT		
☐ ETH STS	QTY: 1	QTY: 2
☐ ETH LNK	SLOT 1	SLOT 2–3

PLC INPUTS – SLOT 1

I0	POWER LOSS/E-STOP PRESSED
I1	SYSTEM RESET
I2	SPARE
I3	DRUM IN AUTO
I4	DRUM RUNNING
I5	DRUM FAULT
I6	AUGER IN AUTO
I7	AUGER RUNNING
I8	AUGER HIGH CURRENT
I9	AUGER FAULT
I10	START LEVEL
I11	HIGH LEVEL
I12	BASKET SPARY WASH IN AUTO
I13	COMPACTION ZONE SPRAY IN AUTO
I14	SCREENINGS FLUSH IN AUTO
I15	HOT WATER IN AUTO

PLC OUTPUTS – SLOT 3

Q0	CONTROL POWER ENABLE
Q1	REMOTE RESET COMMAND
Q2	SYSTEM READY
Q3	HIGH LEVEL
Q4	INLET VALVE CLOSED
Q5	ALARM HORN
Q6	SPARE
Q7	SPARE
Q8	DRUM CALL TO RUN FORWARD
Q9	SPARE
Q10	DRUM FAULT
Q11	AUGER CALL TO RUN FORWARD
Q12	AUGER CALL TO RUN REVERSE
Q13	AUGER FAULT
Q14	SPARE
Q15	PERMISSIVE

PLC INPUTS – SLOT 2

I0	INLET VALVE IN AUTO
I1	INLET VALVE OPEN
I2	INLET PUMP ON
I3	BOOSTER PUMP IN AUTO
I4	BOOSTER PUMP RUNNING
I5	BOOSTER PUMP FAULT
I6	INLET VALVE OPEN FEEDBACK
I7	INLET VALVE CLOSED FEEDBACK
I8	SPARE
I9	SPARE
I10	SPARE
I11	SPARE
I12	SPARE
I13	MIDDLE LEVEL
I14	INLET VALVE RUN COMMAND
I15	REMOTE SYSTEM RESET

PLC OUTPUTS – SLOT 4

Q0	BASKET SPRAY CALL TO OPEN
Q1	COMPACTION ZONE CALL TO OPEN
Q2	SCREENINGS FLUSH CALL TO OPEN
Q3	HOT WATER SPRAY CALL TO OPEN
Q4	INLET VALVE CALL TO OPEN
Q5	BOOSTER PUMP CALL TO RUN
Q6	SPARE
Q7	SPARE
Q8	SPARE
Q9	SPARE
Q10	SPARE
Q11	SPARE
Q12	SPARE
Q13	SPARE
Q14	SPARE
Q15	INLET PUMP PERMISSIVE

NOTES:
1. THE ABOVE IS A PARTIAL LISTING OF SETPOINTS. ONLY THE SETPOINTS THAT ARE SHOWN ABOVE SHALL BE ALTERED IN THE FIELD.

DEVICE SETTINGS

PLC1 – SETTINGS

REGISTER NUMBER	DESCRIPTION	RANGE	FACTORY SETTING
%MW600	DRUM – OFF DELAY TIME	0–300 SEC.	60 SEC.
%MW602	AUGER – OFF DELAY TIME	0–300 SEC.	70 SEC.
%MW670	AUGER – REPEAT CYCLE ON TIME	1–999 SEC.	10 SEC.
%MW672	AUGER – REPEAT CYCLE OFF TIME	0–999 SEC.	10 SEC.
%MW604	COMPACTION ZONE – REPEAT CYCLE ON TIME	0–60 SEC.	30 SEC.
%MW606	COMPACTION ZONE – REPEAT CYCLE OFF TIME	1–10 HR.	4 HOURS
%MW608	SCREENINGS FLUSH – REPEAT CYCLE ON TIME	0–999 SEC.	5 SEC.
%MW610	SCREENINGS FLUSH – REPEAT CYCLE OFF TIME	0–999 SEC.	900 SEC.
%MW612	SCREENINGS FLUSH – OFF DELAY TIME	0–999 SEC.	120 SEC.
%MW614	HOT WATER – REPEAT CYCLE ON TIME	0–999 SEC.	120 SEC.
%MW616	HOT WATER – REPEAT CYCLE OFF TIME	0–999 SEC.	30 SEC.
%MW618	HIGH LEVEL – ON DELAY	0–999 SEC.	30 SEC.
%MW620	AUGER – FAULT DWELL TIME	3–10 SEC.	5 SEC.
%MW622	AUGER – REVERSE RUN TIME	5–120 SEC.	10 SEC.
%MW624	AUGER – ATTEMPTS TO CLEAR FAULT	1–5 CYCLES	1 CYCLE
%MW626	INLET VALVE – OPEN TRAVEL FAULT TIME	1–999 SEC.	30 SEC.
%MW628	INLET VALVE – CLOSE TRAVEL FAULT TIME	1–999 SEC.	30 SEC.
%MW630	ALARM HORN DURATION TIME	1–999 SEC.	10 SEC.
%MW668	HIGH LEVEL CLOG DELAY TIME (REMOVES HAUL PERMISSIVE)	0–999 MIN.	10 MIN.
%MW632	FOG MODE: DRUM – OFF DELAY TIME	0–300 SEC.	60 SEC.
%MW634	FOG MODE: AUGER – OFF DELAY TIME	0–300 SEC.	70 SEC.
%MW636	FOG MODE: COMPACTION ZONE – REPEAT CYCLE ON TIME	0–60 SEC.	30 SEC.
%MW638	FOG MODE: COMPACTION ZONE – REPEAT CYCLE OFF TIME	1–999 SEC.	300 SEC.
%MW640	FOG MODE: SCREENINGS FLUSH – REPEAT CYCLE ON TIME	0–999 SEC.	5 SEC.
%MW642	FOG MODE: SCREENINGS FLUSH – REPEAT CYCLE OFF TIME	0–999 SEC.	900 SEC.
%MW644	FOG MODE: SCREENINGS FLUSH – OFF DELAY TIME	0–999 SEC.	120 SEC.
%MW646	FOG MODE: HOT WATER – REPEAT CYCLE ON TIME	0–999 SEC.	120 SEC.
%MW648	FOG MODE: HOT WATER – REPEAT CYCLE OFF TIME	0–999 SEC.	30 SEC.
%MW650	DAF MODE: DRUM – OFF DELAY TIME	0–300 SEC.	60 SEC.
%MW652	DAF MODE: AUGER – OFF DELAY TIME	0–300 SEC.	70 SEC.
%MW654	DAF MODE: COMPACTION ZONE – REPEAT CYCLE ON TIME	0–60 SEC.	30 SEC.
%MW656	DAF MODE: COMPACTION ZONE – REPEAT CYCLE OFF TIME	1–999 SEC.	300 SEC.
%MW658	DAF MODE: SCREENINGS FLUSH – REPEAT CYCLE ON TIME	0–999 SEC.	5 SEC.
%MW660	DAF MODE: SCREENINGS FLUSH – REPEAT CYCLE OFF TIME	0–999 SEC.	900 SEC.
%MW662	DAF MODE: SCREENINGS FLUSH – OFF DELAY TIME	0–999 SEC.	120 SEC.

NOTES:
1. THE ABOVE IS A PARTIAL LISTING OF SETPOINTS. ONLY THE SETPOINTS THAT ARE SHOWN ABOVE SHALL BE ALTERED IN THE FIELD.

PLC1 – SCADA MONITORING

REGISTER NUMBER		DESCRIPTION	DATA TYPE	SIGNAL FUNCTION
%MW500.0	%M500	POWER LOSS/E-STOP PRESSED	BIT	READ
%MW500.1	%M501	DRUM IN AUTO	BIT	READ
%MW500.2	%M502	DRUM RUNNING	BIT	READ
%MW500.3	%M503	DRUM FAULT	BIT	READ
%MW500.4	%M504	AUGER IN AUTO	BIT	READ
%MW500.5	%M505	AUGER RUNNING	BIT	READ
%MW500.6	%M506	AUGER HIGH CURRENT	BIT	READ
%MW500.7	%M507	AUGER FAULT	BIT	READ
%MW500.8	%M508	START LEVEL	BIT	READ
%MW500.9	%M509	HIGH LEVEL	BIT	READ
%MW500.10	%M510	BASKET SPARY WASH IN AUTO	BIT	READ
%MW500.11	%M511	COMPACTION ZONE SPRAY IN AUTO	BIT	READ
%MW500.12	%M512	SCREENINGS FLUSH IN AUTO	BIT	READ
%MW500.13	%M513	HOT WATER IN AUTO	BIT	READ
%MW500.14	%M514	INLET VALVE IN AUTO	BIT	READ
%MW500.15	%M515	INLET VALVE IN OPEN	BIT	READ
%MW501.0	%M516	BOOSTER PUMP IN AUTO	BIT	READ
%MW501.1	%M517	BOOSTER PUMP RUNNING	BIT	READ
%MW501.2	%M518	BOOSTER PUMP FAULT	BIT	READ
%MW501.3	%M519	INLET VALVE OPEN FEEDBACK	BIT	READ
%MW501.4	%M520	INLET VALVE CLOSED FEEDBACK	BIT	READ
%MW501.5	%M521	SYSTEM PERMISSIVE	BIT	READ
%MW501.6	%M522	HAUL PERMISSIVE	BIT	READ
%MW1000.0		INLET VALVE RUN COMMAND	BIT	*
%MW1000.1		REMOTE SYSTEM RESET	BIT	*
%MW1000.2		DAF SELECTED	BIT	*
%MW1000.3		FOG SELECTED	BIT	*
%MW1000.4		FOG SELECTED	BIT	*
%MW1000.5		STANDARD SELECTED	BIT	*
%MW1005	%M1005	MODE SELECT STD/DIAR/FOG/DAF	INT	*

%MW990 SELECTED MODE: 0=STANDARD; 1=FOG; 2=DAF

DEVICE SETTINGS

PLC1 – COMMUNICATIONS SETUP

PARAMETER	VALUE
DRIVER	DF1 FULL DUPLEX
BAUD RATE	9600
PARITY	NONE
STOP BITS	1
ERROR DETECTION	CRC

CHANNEL 1 – SYSTEM

PARAMETER	VALUE
IP ADDRESS	10.0.0.2
SUBNET MASK	255.255.255.0
GATEWAY ADDRESS	0.0.0.0
BOOTP ENABLE	NO

OIU1 – COMMUNICATIONS SETUP

PARAMETER	VALUE
DRIVER	DF1 FULL DUPLEX
BAUD RATE	9600
PARITY/STOP BITS	NONE/1
ERROR DETECTION	CRC
HANDSHAKING	OFF

CHANNEL 1 – SYSTEM

PARAMETER	VALUE
IP ADDRESS	10.0.0.3
SUBNET MASK	255.255.255.0
GATEWAY ADDRESS	0.0.0.0
BOOTP ENABLE	NO

LM1,2 – MOTOR LOAD MONITOR

DIAL	SETTING
COS MAX	MIN
COS MIN	MIN
TIME S	MIN
TIME R	MIN

NOTES:
1. THE LOAD MONITOR DIAL SHALL BE SET TO MINIMUM FROM THE FACTORY.
2. FIELD CONFIGURATION SHALL BE PERFORMED BY THE STARTUP TECHNICIAN PER THE APPROPRIATE TECHNICAL DOCUMENT.

TS1 – SETTINGS

HEATER ON/OFF	60 °F

SMS1 – SETTINGS

PRESETS	FACTORY	SETTINGS
START	3 SEC	
STOP	3 SEC	
INITIAL VOLTAGE	40 %	

Rev	Revision Description	Date	Rev By	Approver

Enviro-Care
A WAMGROUP® Company

PROPERTY OF ENVIRO-CARE COMPANY. ALL RIGHTS RESERVED. NO PART OF THIS DRAWING MAY BE REPRODUCED IN ANY FORM WITHOUT WRITTEN PERMISSION FROM ENVIRO-CARE. ENVIRO-CARE COMPANY RESERVES THE RIGHT TO ALTER DATA OR THE DESIGN OF ITS EQUIPMENT AT ANY TIME WITHOUT PRIOR NOTICE AND WITHOUT ANY OBLIGATION WHATSOEVER.

Title
CONTROL PANEL: 3/60/480
BEAST LIQUID WASTE RECEIVING SYSTEM
MAIN CONTROL PANEL

Designer	Checker	Date	Sheet
MBS	ALS	08/14/19	10 of 12

Third Angle Projection

Drawing Number: WEC218286Z-CP01

Revision: 0

ELEMECH PROJECT: EVC7837A10

Z:\Enviro-Care\7800\EVC7837 - Fredrick Winchester, VA\Submittal\EVC7837A11

SEQUENCE OF OPERATION

Control Power On–Delay:
Each time the control panel power supply is cycled, the PLC will allow all solid state devices to become fully energized before enabling the control power circuit.

Inlet Valve Control:
Open: When the valve selector is in the OPEN position, the valve will open.
Close: When the valve selector is in the CLOSE position, valve will close.
Auto: When the valve selector is in the AUTO position, the valve will open when it receives the inlet valve run command signal from FOG Receiving Station Local Control Panel and the waste type is either STD or FOG. The valve remains open as long as the signal is present or until a high level condition would cause the valve to close.

Note: In DAF mode the Inlet Valve will remain closed. DAF will be pumped into the Beast through the inlet pump. The inlet pump permissive will be energized when the Beast is in DAF mode, the inlet valve run command is energized, and the inlet valve is closed. The Beast will wait until the Inlet Pump is energized before beginning to run in DAF.

Drum Modes of Operation:
HAND:
When the Drum Selector is in the HAND position, the Drum runs continuously forward.

AUTO:
When the Drum selector is in the AUTO position, the Drum will start forward when the liquid level reaches the start level probe.

After the liquid level falls below the start level set–point for the time set in the Drum Off–Delay Timer, the Drum will shut off.

If the Drum is in AUTO mode and the Auger faults, the Drum will stop.

Auger Modes of Opertaion:
HAND:
When Auger Selector is in the HAND position, the Auger will run per the Auger FOR–OFF–REV selector. In FOR position, the Auger runs continuously forward. In OFF position, the Auger is off. In REV position, the Auger runs in reverse until operator release (spring–returns to OFF).

AUTO:
When the Auger selector is in the AUTO position, the Auger run per the Auger Repeat Cycle Timers (On time first) when the liquid level reaches the start level probe.

After the liquid level falls below the start level set–point for the time set in the Auger Off–Delay Timer, the Auger will shut off.

If the Auger is in AUTO mode and the Drum faults, the Auger will stop.

Note:
1. Pressing and holding the System Reset pushbutton for 3 seconds will initiate a Drum and Auger cycle if the Drum and Auger selectors are in the AUTO position.
2. Setting the Auger Repeat Cycle Off time to 0 will allow the Auger to run continuously.

Booster Pump Modes of Operation:
HAND:
When Booster Pump Selector is in the HAND position, the pump will run continuously. In OFF position, the pump is off.

AUTO:
When the Booster pump selector is in the AUTO position, the pump will run when the basket spray or the screens flush solenoids are energized.

Basket Spray With Optional Transport Tube Spray Modes of Operation:
HAND:
When the Basket Spray selector is in the HAND position, the Basket Spray will run continuously.

AUTO:
When the Basket Spray selector is in the AUTO position, the Spray will run when the Drum and the Auger are running in the forward direction. The Transport Tube Spray (available to wash screenings in transport tube) can be deactivated by closing ball valves upstream of the Transport Tube Spray nozzles. If the valves to the Transport Tube Spray nozzles are open, the Transport Tube Spray operates when the Basket Spray operates.

Compaction Zone Spray Modes of Operation:
HAND:
When the Compaction Zone Spray selector is in the HAND position, the Compaction Zone Spray will run continuously.

AUTO:
When the Compaction Zone Spray selector is in the AUTO position, the Spray will cycle ON and OFF (ON first) per the settings of the Compaction Zone Spray Repeat Cycle Timer (adjustable). The Compaction Zone Spray is independent of the Drum and Auger operation.

SEQUENCE OF OPERATION

Screenings Flush Modes of Operation:
HAND:
When the Screenings Flush selector is in the HAND position, the Screenings Flush will run continuously.

AUTO:
When the Screenings Flush selector is in the AUTO position, the Screenings Flush will run according to the Screenings Flush Repeat Cycle Timer (adjustable), while the Drum and Auger are running. When the Auger stops, the Screenings Flush will run continuously for the time set in the Screenings Flush Off Delay Timer.

Hot Water Spray Modes of Operation:
HAND:
When the Hot Water Spray selector is in the HAND position, the Hot Water Spray will run continuously.

AUTO:
When the Hot Water Spray selector is in the AUTO position, the Hot Water Spray will run according to the Hot Water Spray Repeat Cycle Timer (adjustable), while the Drum and Auger are running. When the Drum stops, the Hot Water Spray will stop. If a high level condition is indicated the Hot Water Spray will run until that condition drops out and then revert back to repeat cycle timer operation.

Permissive contact:
The permissive dry contact will close when all necessary selector switches are in AUTO, there are no faults present, the E–STOP is not pressed, and there is no High Level condition.

Note: The Permissive dry contact is monitored by SCADA.

High Level:
If the liquid level raises above the high level probe and remains above the level for time set in high level delay timer, a high level alarm will be generated on the OIU, and the inlet valve will close. The inlet valve will open again after the level drops below the high level probe for the high level on delay time. The generated alarm will remain on the OIU until the high level condition has cleared. This alarm will be logged in the Alarm History.

Note:
1. This panel controls the inlet valve.

EMERGENCY STOP:
If the Emergency Stop (E–Stop) pushbutton is pressed, the Drum, the Auger, the Drum Spray, and the Compaction Zone Spray will stop immediately. Drum, Auger, and Sprays will also stop if the hatch door is opened. To re–set, pull out E–Stop pushbutton and press the System Reset pushbutton.

Note: If the power to the panel is interrupted, the equipment may cycle immediately once the power is restored. Pressing the System Reset pushbutton after a power outage will not be required.

Local Control Station:
- The System Ready pilot light will energize when all necessary selector switches are in AUTO, there are no faults present, the E–STOP is not pressed, and there is no High Level condition.
- The High Level light will flash on and off when a high level condition is present. Once the inlet valve starts to close the High Level light will energize constantly. The High Level light will de–energize when the high level condition goes away.
- The Inlet Valve Closed light will energize when the inlet valve closed feedback is received.
- The alarm horn will energize when a high level condition is present for an duration. The alarm horn will de–energize when the duration time is complete or high level is cleared, whichever occurs first.

Std/Diary – FOG – DAF Modes of Operations:
Std/Diary (1): Operates per the standard sequence as listed above.
FOG (2): The Drum and Auger will start when the Log In is complete and the valve opens (equipment does not wait on level). When Auger is running, the Compaction Zone Spray will cycle ON and OFF (ON first) per the settings of the Compaction Zone Spray Repeat Cycle Timer (adjustable).
DAF (3): The Drum and Auger will start when the Log In is complete and the inlet pump is running (equipment does not wait on level). When Auger is running, the Compaction Zone Spray will cycle ON and OFF (ON first) per the settings of the Compaction Zone Spray Repeat Cycle Timer (adjustable). The Hot Water Spray will open continuously when the Drum and Auger are running.

NOTE:
1. Mode selection will be through SCADA. Mode selection will also be available at the OIU if SCADA is not available.
2. Mode cannot be changed until Hauler logs out.

SEQUENCE OF OPERATION

DRUM FAULTS/Resets:
1. A fault occurs when the Drum Load Monitor (if Soft Starter is used) is tripped. The Drum will stop immediately, and the Drum Fault light will be illuminated.
   Reset: Push the System Reset button.

2. A fault occurs when the Drum Motor Starter Thermal Overload is tripped. The Drum will stop immediately, and the Drum Fault light will be illuminated.
   Reset: Push the Reset pushbutton on the Drum Motor Starter Thermal Overload located inside the control panel. Unless entry into the control panel is being performed by a qualified electrician, the control panel power should be shut off prior to entry.

3. A fault occurs when the Drum Motor Thermostat (if supplied) is tripped. The Drum will stop immediately.
   Reset: Fault 3 resets automatically when the Drum Motor returns to a safe temperature.

AUGER FAULTS/Resets:
4. A fault occurs when the Auger Load Monitor is tripped when in HAND. The Auger will stop immediately, and the Auger Fault light will be illuminated.
   Reset: Push the System Reset button.

5. A fault occurs when the Auger Motor Starter Thermal Overload is tripped. The Auger will stop immediately, and the Auger Fault light will be illuminated.
   Reset: Push the Reset pushbutton on the Auger Motor Starter Thermal Overload located inside the control panel. Unless entry into the control panel is being performed by a qualified electrician, the control panel power should be shut off prior to entry.

6. A fault occurs when the Auger Motor Thermostat (if supplied) is tripped. The Auger will stop immediately.
   Reset: Fault 6 resets automatically when the Auger Motor returns to a safe temperature.

7. A fault occurs when the Auger Load Monitor detects high current while operating in the FORWARD or REVERSE direction in AUTO mode. The Auger will attempt to clear the obstruction (jam) automatically: the Auger will stop, dwell, and then run in REVERSE for the time set in the Auger Reverse Run Timer. If the Auger Power Monitor detects an alarm in reverse it will stop, dwell and resume jam sequence. The Auger will then stop, dwell, and resume FORWARD operation. If high current is no longer detected, the Auger shall automatically reset and resume normal operation. If high current in FORWARD operation persists, the STOP–DWELL–REVERSE–STOP–DWELL–FORWARD process (Jam Cycle) will repeat. The Screen will attempt to clear the jam by repeating the Jam Cycle for the number of times set in the Jam Cycle Counter (Factory Default Setting is 4). If high current in FORWARD direction persists, or if Motor Starter Thermal Overload is detected while operating in REVERSE, the Auger will stop immediately, and the Auger Fault light will be illuminated.
   Reset: After manually clearing the obstruction, push the System Reset button.

BOOSTER PUMP FAULTS/Resets:
8. A fault occurs when the Booster Pump Motor Starter Thermal Overload is tripped. The Booster Pump will stop immediately, and the Booster Pump Fault light will be illuminated.
   Reset: Push the Reset pushbutton on the Booster Pump Motor Starter Thermal Overload located inside the control panel. Unless entry into the control panel is being performed by a qualified electrician, the control panel power should be shut off prior to entry.

9. A fault occurs when the Booster Pump Motor Thermostat (if supplied) is tripped. The Booster Pump will stop immediately.
   Reset: Fault 9 resets automatically when the Booster Pump Motor returns to a safe temperature.

INLET VALVE FAULTS/Resets:
10. A fault occurs when the Inlet Valve is called to open or close in the AUTO mode and the position feedback is not received in the time set in the Inlet Valve Fault timer.
- When fault 10 occurs, the permissive dry contact will be removed.
- Fault 10 can be reset by pressing the System Reset pushbutton.

OIU – Information:
1. The OIU will display the elapsed motor run times.
2. All adjustable setpoints can be accessed and adjusted through the OIU.
3. The present fault will be displayed on the OIU.
4. The history of all past faults and high level alarms can be accessed through the OIU.
5. A high level alarm will be displayed on the OIU.

Rev	Revision Description	Date	Rev By	Approver

Enviro-Care
A WAMGROUP® Campany

PROPERTY OF ENVIRO-CARE COMPANY. ALL RIGHTS RESERVED. NO PART OF THIS DRAWING MAY BE REPRODUCED IN ANY FORM WITHOUT WRITTEN PERMISSION FROM ENVIRO-CARE. ENVIRO-CARE COMPANY RESERVES THE RIGHT TO ALTER DATA OR THE DESIGN OF ITS EQUIPMENT AT ANY TIME WITHOUT PRIOR NOTICE AND WITHOUT ANY OBLIGATION WHATSOEVER.

Title
CONTROL PANEL: 3/60/480
BEAST LIQUID WASTE RECEIVING SYSTEM
MAIN CONTROL PANEL

Designer	Checker	Date	Sheet
MBS	ALS	08/14/19	11 of 12

Third Angle Projection

Drawing Number	Revision
WEC218286Z-CP01	0

Z:\Enviro-Care\7800\EVC7837 - Fredrick Winchester, VA\Submittal\EVC7837A12

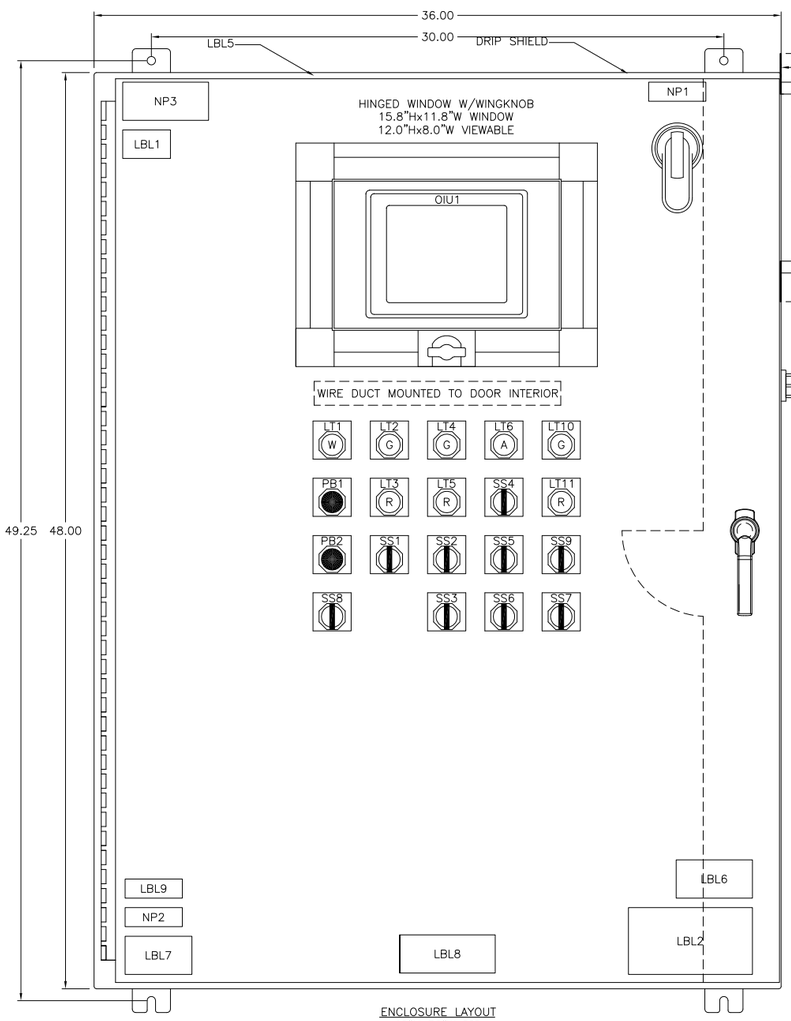

ENCLOSURE LAYOUT
48"Hx36"Wx8"D
NEMA 4X, 304 STAINLESS STEEL

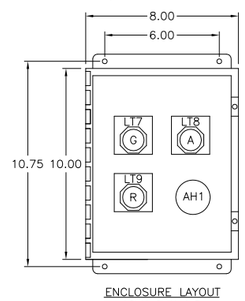

ENCLOSURE LAYOUT
10"Hx8"Wx4"D
NEMA 4X STAINLESS STEEL

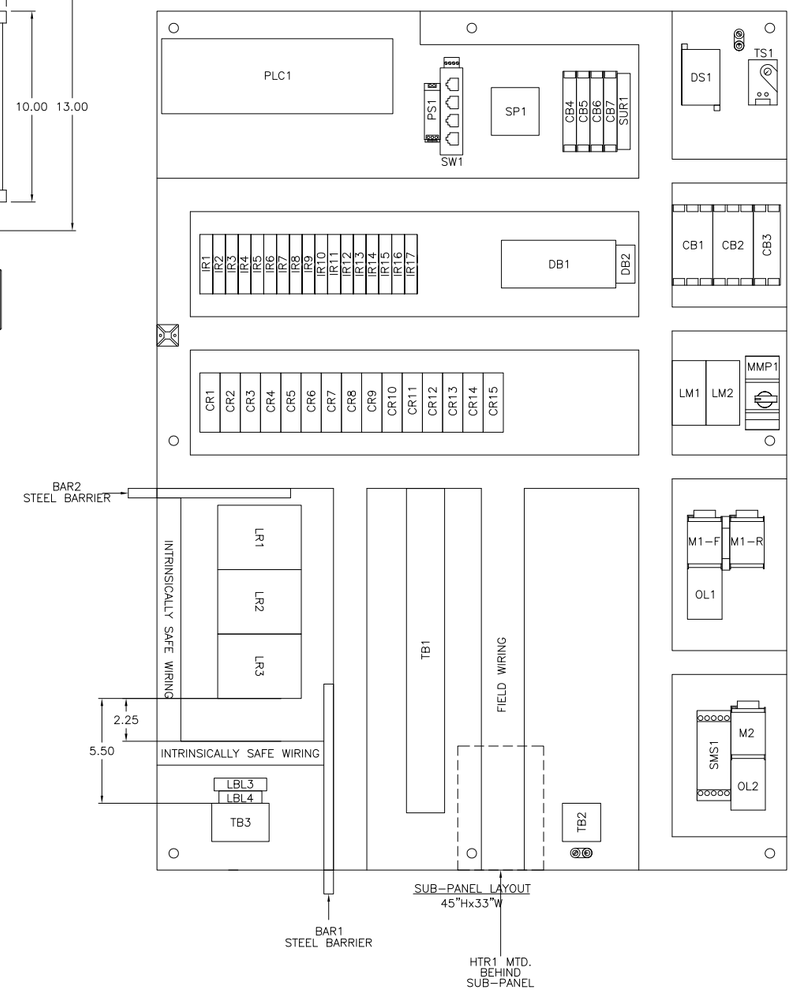

SUB–PANEL LAYOUT
45"Hx33"W

PILOT DEVICE LEGEND PLATES:

LT1	– CONTROL POWER ON	
LT2	– DRUM RUNNING	
LT3	– DRUM FAULT	
LT4	– AUGER RUNNING	
LT5	– AUGER FAULT	
LT6	– HIGH LEVEL	
LT7	– SYSTEM READY	
LT8	– HIGH LEVEL	
LT9	– INLET VALVE CLOSED	
LT10	– BOOSTER PUMP RUNNING	
LT11	– BOOSTER PUMP FAULT	
PB1	– EMERGENCY STOP	
PB2	– SYSTEM RESET	
SS1	– DRUM	HAND–OFF–AUTO
SS2	– AUGER	HAND–OFF–AUTO
SS3	– AUGER	FOR–OFF–REV
SS4	– BASKET SPRAY	HAND–OFF–AUTO
SS5	– COMPACTION ZONE	HAND–OFF–AUTO
SS6	– SCREENINGS FLUSH	HAND–OFF–AUTO
SS7	– HOT WATER SPRAY	HAND–OFF–AUTO
SS8	– INLET VALVE	OPEN–CLOSE–AUTO
SS9	– BOOSTER PUMP	HAND–OFF–AUTO

NAMEPLATES:

NP1 – 480VAC–3PH–60HZ
NP2 – INTRINSICALLY SAFE CIRCUITS
NP3 – CONTROL PANEL PROVIDES INTRINSICALLY SAFE CIRCUIT EXTENSIONS FOR USE IN CLASS I, GROUPS A,B,C,D; CLASS II, GROUPS E,F,G; CLASS III HAZARDOUS LOCATIONS WHEN CONNECTED PER GEM SENSORS FORM 270, SHEET P/N 100274–1, REV. H

LABEL DESCRIPTION:

LBL1 – WARNING: MULTIPLE SUPPLY SOURCES OPEN ALL DISCONNECTS BEFORE SERVICING EQUIPMENT OR OTHER UNIT WIRING.
LBL2 – DANGER HIGH VOLTAGE ENTRY BY QUALIFIED PERSON ONLY
LBL3 – WARNING SUBSTITUTION OF COMPONENTS MAY IMPAIR INTRINSIC SAFETY
LBL4 – INTRINSICALLY SAFE FIELD WIRING TERMINALS
LBL5 – WARNING DAMAGE RESULTING FROM INSTALLATION OF TOP ENTRY CONDUIT WILL VOID WARRANTY
– USE PROPER FITTINGS, MYERS TYPE 4 OR EQUAL
– PROTECT INTERIOR DEVICES FROM INSTALLATION DEBRIS
LBL6 – DANGER ARC FLASH AND SHOCK HAZARD FOLLOW ALL REQUIREMENTS NFPA 70E FOR SAFE WORK PRACTICES AND FOR PERSONAL PROTECTIVE EQUIPMENTS.
LBL7 – ELEMECH ELECTRICAL CONTROL SYSTEMS
LBL8 – ENVIRO–CARE
LBL9 – WARNING TO PREVENT IGNITION OF FLAMMABLE OR COMBUSTIBLE ATMOSPHERES, DISCONNECT POWER BEFORE SERVICING.

Rev	Revision Description	Date	Rev By	Approver

Enviro-Care
A WAMGROUP® Company

PROPERTY OF ENVIRO-CARE COMPANY. ALL RIGHTS RESERVED. NO PART OF THIS DRAWING MAY BE REPRODUCED IN ANY FORM WITHOUT WRITTEN PERMISSION FROM ENVIRO-CARE. ENVIRO-CARE COMPANY RESERVES THE RIGHT TO ALTER DATA OR THE DESIGN OF ITS EQUIPMENT AT ANY TIME WITHOUT PRIOR NOTICE AND WITHOUT ANY OBLIGATION WHATSOEVER.

Title
CONTROL PANEL: 3/60/480
BEAST LIQUID WASTE RECEIVING SYSTEM
MAIN CONTROL PANEL

Designer	Checker	Date	Sheet
MBS	ALS	08/14/19	12 of 12

Third Angle Projection

Drawing Number	Revision
WEC218286Z-CP01	0

ELEMECH PROJECT: EVC7837A12

Item No	Component	Description	Manufacturer Part Number	QTY	Device
Beast Inlet and Outlet Pump Control Panel (Quantity: 1)					
1	00-000-000	Wire, Hardware, Wire labels, etc.	EleMech: Miscellaneous	1	
2	10-069-000	Wireway Duct Cover, 1.5"W, 6 Ft. Section, w/Panduit F Series	Panduit: C1.5WH6	6	
3	10-069-001	Wireway Duct Cover, 1"W, 6 Ft. Section, w/Panduit F Series	Panduit: C1WH6	6	
4	10-069-005	Wireway Duct, 1.5"Wx3"H, 6 Foot Section	Panduit: F1.5X3WH6	6	
5	10-069-007	Wireway Duct, 1"Wx3"H, 6 Foot Section	Panduit: F1X3WH6	6	
6	10-069-008	Wireway Duct, 2"Wx3"H, 6 Foot Section	Panduit: F2X3WH6	3	
7	10-069-018	Wireway Duct Cover, 2"W, 6 Ft. Section, Light Gray	Panduit: C2LG6	3	
8	25-000-A001	Legendplate Assembly, Yellow E-Stop, Standard Encl.	EleMech: 25-000-A001 Assembly	1	
9	25-000-A002	Legendplate Assembly, White, Black Text, Standard Encl.	EleMech: 25-000-A002 Assembly	8	
10	25-000-A019	Nameplate Assembly, White: Power Supply - 3/60/480VAC	EleMech: 25-000-A019 Assembly	1	
11	42-063-007	Terminal Block, Din Rail, 35MM Wide, 15 High, 2 Meters Long	Iboco: Omega 3 AF	1	
12	51-000-062	Wire, MTW Type, 600V, 105°C, CSA/UL1015, Tinned Copper	EleMech: 51-000-062	1	
13	52-000-000	Label, Underwriters Laboratories 508A, w/Decal Set	EleMech: 508A	1	
14	01-005-005	Alarm Horn, Panel Mount, 120VAC, 45mm front, 22.5mm, NEMA 4X	Allen-Bradley: 855P-B10ME22	1	AH1
15	03-058-048	Cover, Circuit Breaker for GV3P series	Square D: GV3G66	2	CB1,2
16	23-058-016	Motor Starter Protector, Aux., 1NO-1NC, S-Mnt, w/ GV2/3	Square D: GVAM11	2	CB1,2
17	23-058-024	Motor Starter Protector, 3PH, 600V, 17-25 Amp Range, 508E	Square D: GV3P25	2	CB1,2
18	03-058-119	Circuit Breaker, 1 Pole, 240VAC, 2A, 14kA, UL489, Type C	Square D: M9F42102	1	CB5
19	06-058-011	Control Relay, 3PDT,120VAC, 11Pin Spade, Indicator, Operator	Square D: RXM3AB2F7	11	CR1-11
20	06-058-012	Control Relay, Bus Jumper, 2-Pole, w/Telemec. RXM Relay	Square D: RXZ S2	10	CR1-11
21	38-058-003	Socket, 11 Pin Spade, Din, Screw Term., 3Tier, 250V w/3-Pole	Square D: RXZE2S111M	11	CR1-11
22	07-063-000	Distribution Block, End Cover, 4 Pole, 300V,10A, w/WK4E\U\VB	Wieland: 07.311.4053.1	1	DB1
23	07-063-001	Distribution Block, Jumper, 4 Pole, 300V,10A, w/WK4E\U\VB	Wieland: Z7.210.3427	3	DB1
24	07-063-002	Distribution Block, Single Pole, 10A, 300V, WK4E\U\VB	Wieland: 57.404.6955.1	14	DB1
25	07-030-A004	Distribution Block Assembly, 3PH, 85A, 4-14AWG, 1 In, 4 Out	Mersen: MPDB62161 Assembly	1	DB2
26	09-001-A014	Disconnect Assembly, Non-Fused, 60 Amp, NEMA 4X, 12" Depth	ABB: OT63F3 Assembly	1	DS1
27	11-000-340	Enclosure Drip Shield, Stainless Steel, Per Inch	EleMech: 11-000-340	36	EN1
28	11-035-044	Enclosure, NEMA 4X, 304SS, 36"Hx36"Wx12"D, C. Hinge	Hoffman: A-36H3612SSLP	1	EN1
29	11-035-138	Sub-Panel, Painted Steel, w/36"Hx36"W C. Hinge Encl	Hoffman: A-36P36	1	EN1
30	11-035-837	Enclosure Filter Fan, Series HF, 70CFM w/Filter, 115VAC, 9"	Hoffman: HF0916414	1	FAN1
31	11-035-838	Enclosure Exhaust Grill , Series HG, 9"	Hoffman: HG0900504	1	FAN1
32	11-035-925	Fan Shroud Kit, NEMA 4X, 304 Stainless Steel, for HF09	Hoffman: HH09SS04004X	2	FAN1
33	15-011-000	Ground Lug, 14AWG - 4AWG	Blackburn: L70	2	GND

Item No	Component	Description	Manufacturer Part Number	QTY	Device
34	16-052-005	Elapsed Time Meter, 6 Digit, Round, 3-Hole, NEMA 4X	Redington: 722-0004	2	HM1,2
35	16-052-006	Elapsed Time Meter, Gasket, NEMA 4X (Use w/722-0004)	Redington: 5003-011	2	HM1,2
36	17-451-000	Heater, Silicone, Flat, 120VAC, 75 Watts, w/12" Lead, UL/CSA	Tempco: SHS80707	1	HTR1
37	52-137-003	Label, Caution: Heater Element, 1.5"Wx0.75"H, White/Red	Nameplate Tech: 52-137-003	1	HTR1
38	52-137-002	Label, Multiple Supply Sources, Warning, 2.5"Wx1.5"H, Yellow	Nameplate Tech: 52-137-002	1	LBL1
39	52-137-000	Label, High Voltage, Danger, 2.25"Wx4.0"H, White/Black/Red	Nameplate Tech: 52-137-000	1	LBL2
40	32-005-046	Lens, Pilot Light, White, NEMA 4X, Standard, w/A-B 800H	Allen-Bradley: 800T-N26W	1	LT1
41	32-005-048	Pilot light, NEMA 4X, 120VAC, Transformer, No Lens	Allen-Bradley: 800H-PR16	5	LT1,3,6-8
42	32-005-044	Lens, Pilot Light, Green, NEMA 4X, Standard, w/A-B 800H	Allen-Bradley: 800T-N26G	2	LT3,7
43	32-005-045	Lens, Pilot Light, Red, NEMA 4X, Standard, w/A-B 800H	Allen-Bradley: 800T-N26R	2	LT6,8
44	25-000-A010	Nameplate Assembly, White, Black Text, 1"Hx3"W	EleMech: 25-000-A010 Assembly	6	NP1-6
45	29-005-117	Pushbutton, E-Stop, NEMA 4X, Oper+1NC, Twist Rel. Red Head	Allen-Bradley: 800H-TFRXT6D2	1	PB1
46	02-005-002	Contact Block, 2NC, w/A-B 800 Series	Allen-Bradley: 800T-XA4	1	PB2
47	29-005-002	Pushbutton, NEMA 4X, Oper+1NO, Flush Head, Black	Allen-Bradley: 800H-AR2D1	2	PB2,3
48	33-183-003	PR, Modular Compact, 120VAC, 16)120VAC In, 10)Relay Out	Telemecanique: SR3B261FU	1	PR1
49	EVC-00-P001	Program, PR, Zelio, SR3B261FU, Non-Standard	EleMech: EVC-00-P001	1	PR1
50	13-000-A000	Spare Parts Box Assembly, Din Rail Mount	EleMech: 13-000-A000 Assembly	1	SP1
51	39-005-009	Selector Switch, NEMA 4X, 3 Pos. Maintained, 1NO-1NC	Allen-Bradley: 800H-JR2A	1	SS2
52	41-018-A070	Control Transformer Assembly, 480-120VAC, 500VA, w/C-Breaker	Cutler-Hammer: C0500E2A Assembly	1	T1,CB3,4
53	42-063-001	Terminal Block, End Plate, Gray, w/WK4/U	Wieland: 07.311.0155.0	2	TB
54	42-063-003	Terminal Block, Single Pole Gray, 30A, 600V, 6MM Wide, WK4/U	Wieland: 57.504.0055.0	31	TB
55	42-063-000	Terminal Block, Labels, Custom Printed, w/WK4/U	Wieland: 04.242.6353-CUSTOM	80	TB,DB
56	42-063-004	Terminal Block, Ground, 30A, 600V, 6MM Wide, w/WK4/U	Wieland: 57.504.9055.0	7	TB,DB
57	42-063-009	Terminal Block, End Clamp, w/WKN10/U	Wieland: Z5.522.8553	6	TB,DB
58	42-063-008	Terminal Block, Labels, Blank, w/WK4/U-(600 tags per box)	Wieland: Z4.242.6353	22	TB1
59	42-063-015	Terminal Block, Jumper, w/WK4/U, 02 pole, Insulated	Wieland: Z7.281.1227	1	TB1
60	44-051-001	Process Controller, RTD, 1-SPDT, 120VAC	Precision Digital: PD570-6RA-10	2	TIC1,2
61	46-034-001	Thermostat, for fan control, N.O.contact, 6 amp,30-140 F.	Stego: 01141.9-00	1	TS1
62	46-034-000	Thermostat, for heater control, N.C.contact, 6 amp,30-140 F.	Stego: 01140.9-00	1	TS2
63	08-247-A001	Universal Transmitter, 2.3k VAC isolation, 2 Relays, Display	PR Electronics: 4116 Assembly	2	UT1,2
64	50-058-138	Var. Freq. Drive,Open, 10HP 480VAC 3PH Altv 320 Book, w/Pot	Square D: ATV320U75N4B	2	VFD1,2
LCS, 4 Hole, NEMA 4X 304SS, 3 LT, 1 SS (Quantity: 1)					
65	25-000-A002	Legendplate Assembly, White, Black Text, Standard Encl.	EleMech: 25-000-A002 Assembly	4	
66	11-035-009	Enclosure, NEMA 4X, 304SS, 10"Hx8"Wx4"D, Junction Box	Hoffman: A-1008CHNFSS	1	EN

Item No	Component	Description	Manufacturer Part Number	QTY	Device
67	32-005-043	Lens, Pilot Light, Blue, NEMA 4X, Standard, w/A-B 800H	Allen-Bradley: 800T-N26B	1	LT
68	32-005-044	Lens, Pilot Light, Green, NEMA 4X, Standard, w/A-B 800H	Allen-Bradley: 800T-N26G	1	LT
69	32-005-045	Lens, Pilot Light, Red, NEMA 4X, Standard, w/A-B 800H	Allen-Bradley: 800T-N26R	1	LT
70	32-005-048	Pilot light, NEMA 4X, 120VAC, Transformer, No Lens	Allen-Bradley: 800H-PR16	3	LT
71	39-005-001	Selector Switch, NEMA 4X, 2 Pos. Maintained, 1NO-1NC	Allen-Bradley: 800H-HR2A	1	SS
Spare Parts / Ship Loose (Total Quantity Provided)					
72	61-000-012	Labor, Engineering, Submittal, Schematics, BOM	EleMech: 61-000-012	1	

Z:\Enviro-Care\7800\EVC7838 - Frederick Winchester, VA\Submittal\EVC7838A1

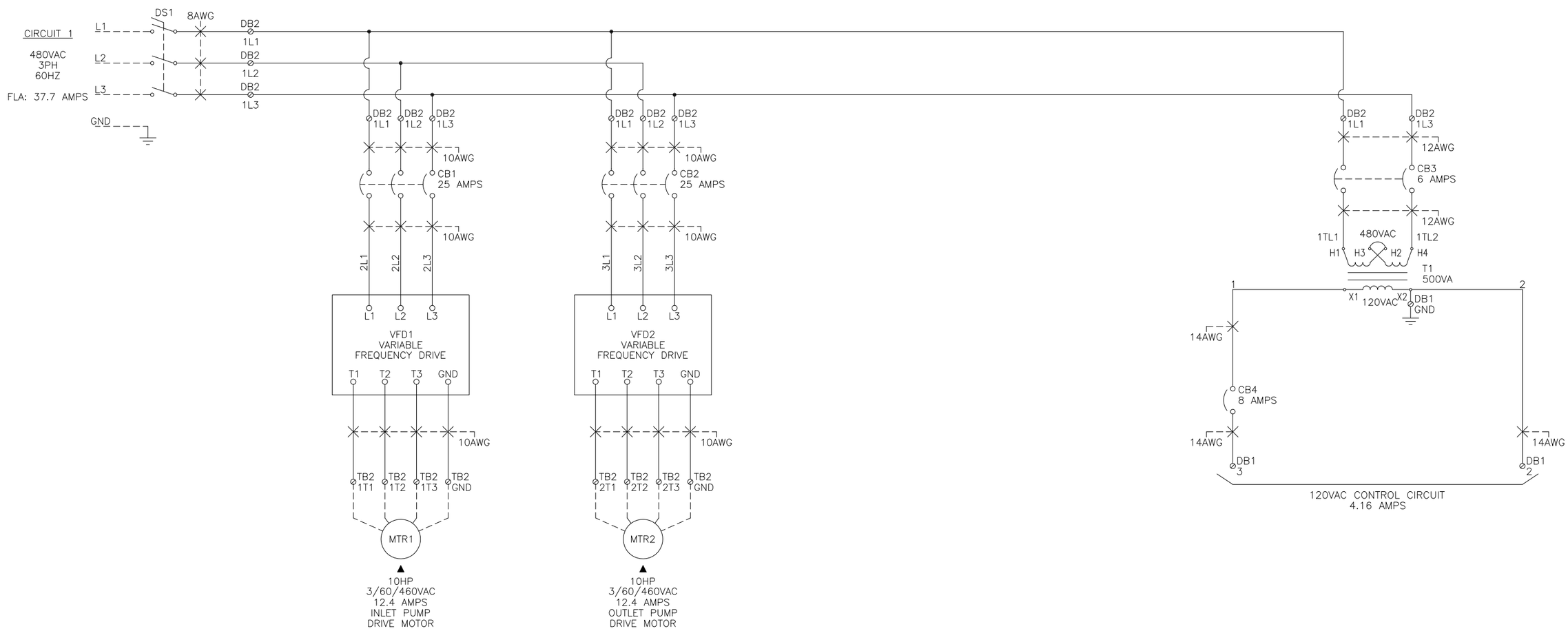

WIRE COLORS:

BLK	–	POWER
BLK	–	120VAC HOT
WHT	–	120VAC NEUTRAL
RED	–	120VAC CONTROL
YEL	–	REMOTE
GRN	–	GROUND
BLU	–	DC POSITIVE/CONTROL
WHT/BLU	–	DC NEUTRAL

NOTES:

1. ▲ DEVICES LOCATED OUTSIDE CONTROL PANEL.
2. ⊘ TERMINAL BLOCK (TB) OR DISTRIBUTION BLOCK (DB) LOCATED IN CONTROL PANEL.
3. – – FIELD WIRING.
4. CONTROL PANEL WIRING SHALL BE MTW TYPE, TINNED COPPER, 600V, 105°C, UL1015/CSA.
5. NAMEPLATES AND LEGENDPLATES SHALL BE WHITE WITH BLACK LETTERS.
6. ELEMECH RESERVES THE RIGHT TO CHANGE, AS NECESSARY, THE SPACING, ORIENTATION, AND PHYSICAL LOCATION OF DEVICES IN ORDER TO OPTIMIZE THE DESIGN.
7. LOCAL MOTOR DISCONNECT SWITCHES SHALL BE PROVIDED BY OTHERS IF REQUIRED BY LOCAL REGULATIONS.
8. JUNCTION BOXES ARE NOT SHOWN AND SHALL BE PROVIDED BY OTHERS AS NECESSARY.

Rev	Revision Description	Date	Rev By	Approver

Enviro-Care
A WAMGROUP® Company

PROPERTY OF ENVIRO-CARE COMPANY. ALL RIGHTS RESERVED. NO PART OF THIS DRAWING MAY BE REPRODUCED IN ANY FORM WITHOUT WRITTEN PERMISSION FROM ENVIRO-CARE. ENVIRO-CARE COMPANY RESERVES THE RIGHT TO ALTER DATA OR THE DESIGN OF ITS EQUIPMENT AT ANY TIME WITHOUT PRIOR NOTICE AND WITHOUT ANY OBLIGATION WHATSOEVER.

Status: FOR APPROVAL

Title
CONTROL PANEL: 3/60/480
INLET AND OUTLET PUMP SYSTEM
MAIN CONTROL PANEL

Designer	Checker	Date	Sheet
MBS	ALS	08/14/19	1 of 7

Third Angle Projection

Drawing Number: WEC218286Z-CP02

Revision: 0

ELEMECH PROJECT: EVC7838A1

Z:\Enviro-Care\7800\EVC7838 - Frederick Winchester, VA\Submittal\EVC7838A2

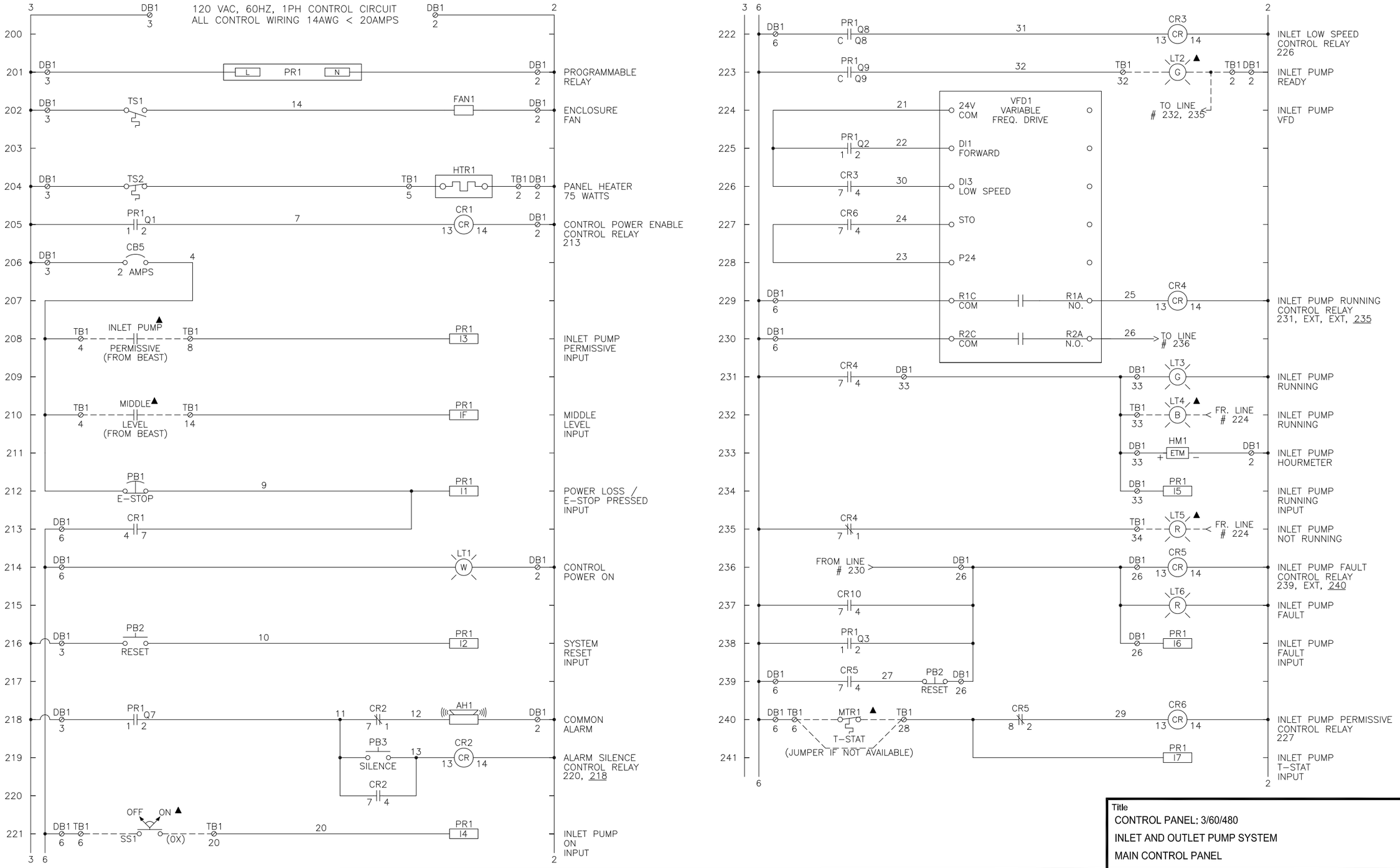

Rev	Revision Description	Date	Rev By	Approver

Enviro-Care
A WAMGROUP® Company

PROPERTY OF ENVIRO-CARE COMPANY. ALL RIGHTS RESERVED. NO PART OF THIS DRAWING MAY BE REPRODUCED IN ANY FORM WITHOUT WRITTEN PERMISSION FROM ENVIRO-CARE. ENVIRO-CARE COMPANY RESERVES THE RIGHT TO ALTER DATA OR THE DESIGN OF ITS EQUIPMENT AT ANY TIME WITHOUT PRIOR NOTICE AND WITHOUT ANY OBLIGATION WHATSOEVER.

Title
CONTROL PANEL: 3/60/480
INLET AND OUTLET PUMP SYSTEM
MAIN CONTROL PANEL

Designer	Checker	Date	Sheet
MBS	ALS	08/14/19	2 of 7

Third Angle Projection

Drawing Number: WEC218286Z-CP02

Revision: 0

ELEMECH PROJECT: EVC7838A2

Z:\Enviro-Care\7800\EVC7838 - Frederick Winchester, VA\Submittal\EVC7838A3

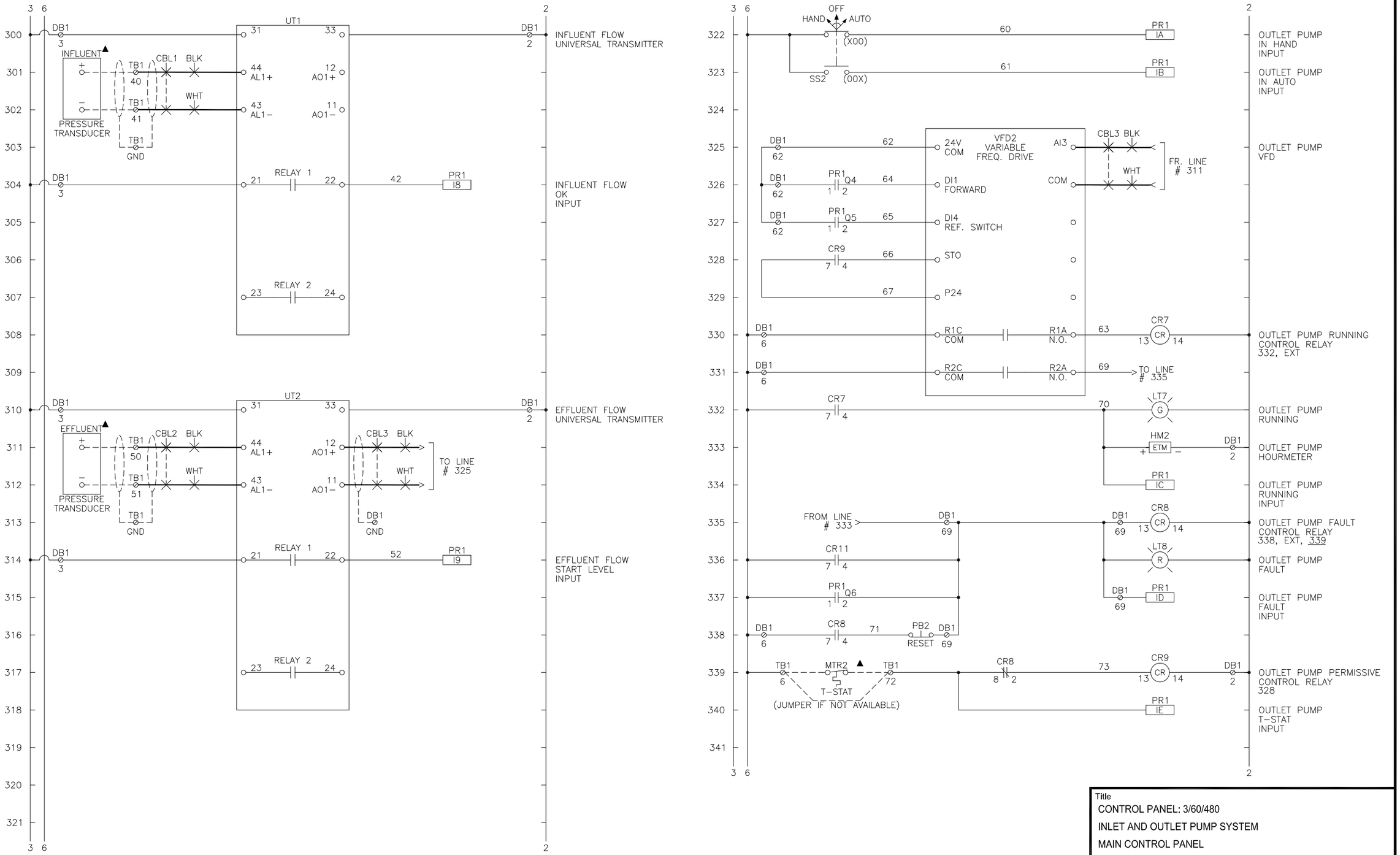

Rev	Revision Description	Date	Rev By	Approver

Title
CONTROL PANEL: 3/60/480
INLET AND OUTLET PUMP SYSTEM
MAIN CONTROL PANEL

Enviro-Care
A WAMGROUP® Company

PROPERTY OF ENVIRO-CARE COMPANY. ALL RIGHTS RESERVED. NO PART OF THIS DRAWING MAY BE REPRODUCED IN ANY FORM WITHOUT WRITTEN PERMISSION FROM ENVIRO-CARE. ENVIRO-CARE COMPANY RESERVES THE RIGHT TO ALTER DATA OR THE DESIGN OF ITS EQUIPMENT AT ANY TIME WITHOUT PRIOR NOTICE AND WITHOUT ANY OBLIGATION WHATSOEVER.

Designer	Checker	Date	Sheet
MBS	ALS	08/14/19	3 of 7

Third Angle Projection

Drawing Number: WEC218286Z-CP02

Revision: 0

ELEMECH PROJECT: EVC7838A3

Z:\Enviro-Care\7800\EVC7838 - Frederick Winchester, VA\Submittal\EVC7838A4

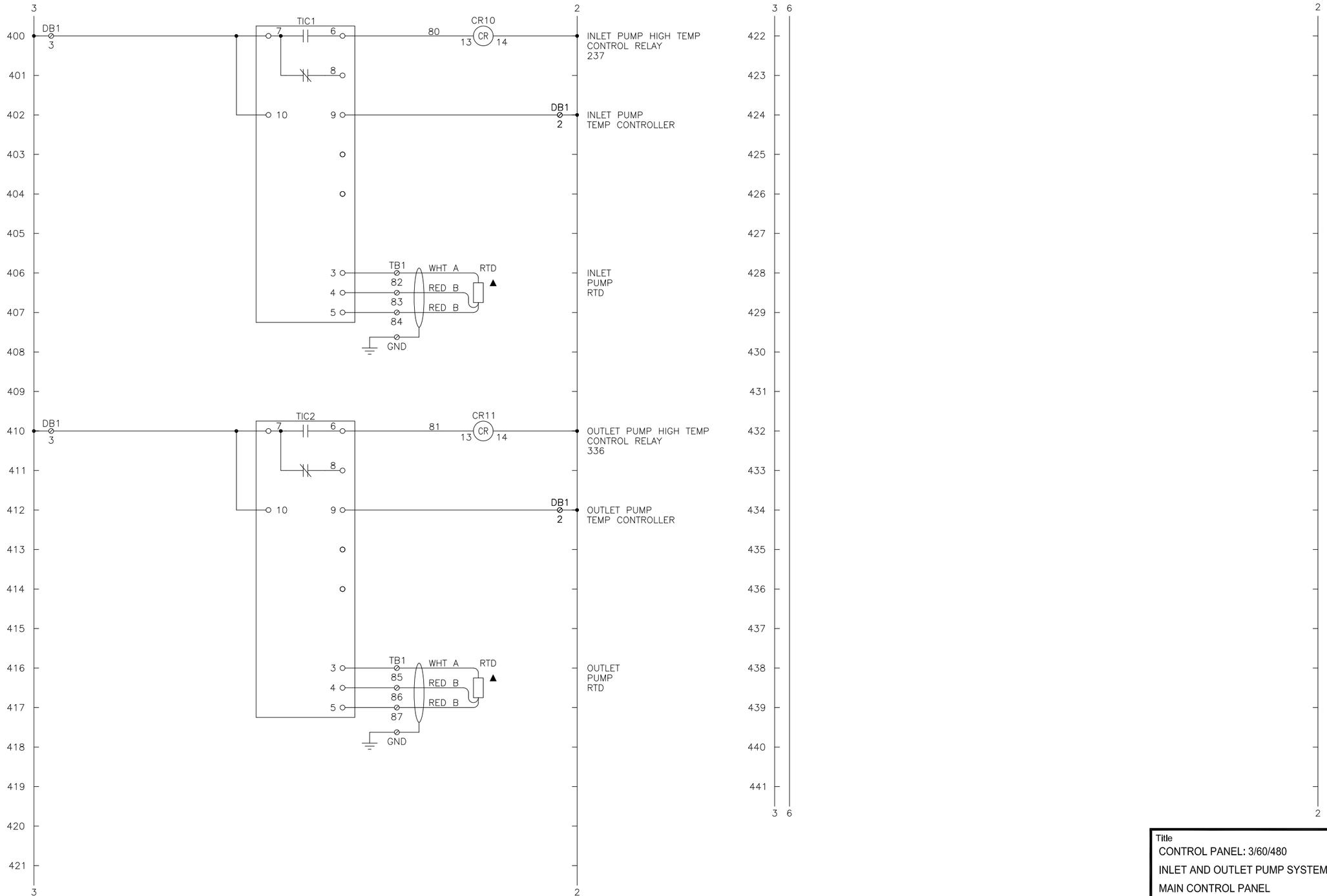

Rev	Revision Description	Date	Rev By	Approver

Enviro-Care
A WAMGROUP® Company

PROPERTY OF ENVIRO-CARE COMPANY. ALL RIGHTS RESERVED. NO PART OF THIS DRAWING MAY BE REPRODUCED IN ANY FORM WITHOUT WRITTEN PERMISSION FROM ENVIRO-CARE. ENVIRO-CARE COMPANY RESERVES THE RIGHT TO ALTER DATA OR THE DESIGN OF ITS EQUIPMENT AT ANY TIME WITHOUT PRIOR NOTICE AND WITHOUT ANY OBLIGATION WHATSOEVER.

Title
CONTROL PANEL: 3/60/480
INLET AND OUTLET PUMP SYSTEM
MAIN CONTROL PANEL

Designer	Checker	Date	Sheet
MBS	ALS	08/14/19	4 of 7

Third Angle Projection

Drawing Number: WEC218286Z-CP02

Revision: 0

ELEMECH PROJECT: EVC7838A4

Z:\Enviro-Care\7800\EVC7838 - Frederick Winchester, VA\Submittal\EVC7838A5

DEVICE SETTINGS

PR1 – I/O

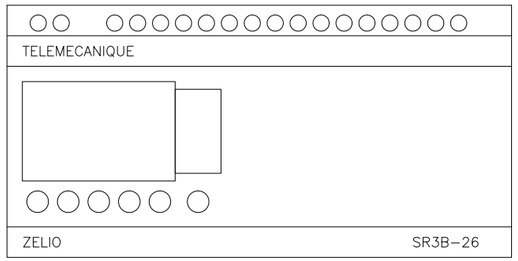

PR INPUTS		PR INPUTS		PR OUTPUTS	
I1	E-STOP PRESSED	IA	OUTLET IN HAND	Q1	POWER ENABLE
I2	SYSTEM RESET	IB	OUTLET IN AUTO	Q2	INLET PUMP CALL
I3	INLET PERMISSIVE	IC	OUTLET RUNNING	Q3	INLET PUMP FAULT
I4	INLET IN START	ID	OUTLET FAULT	Q4	OUTLET PUMP CALL
I5	INLET RUNNING	IE	OUTLET T-STAT	Q5	OUTLET REF. SWITCH
I6	INLET FAULT	IF	MIDDLE LEVEL	Q6	OUTLET PUMP FAULT
I7	INLET T-STAT	IG	SPARE	Q7	COMMON ALARM
I8	INFLUENT FLOW OK			Q8	INLET LOW SPEED
I9	START LEVEL			Q9	INLET PUMP READY
				QA	SPARE

PR1 – SETPOINT CHANGE INSTRUCTIONS

TO ALTER THE VALUE OF A TIMER OR COUNTER:

1. PRESS THE GREEN "MENU/OK", PRESS ARROW DOWN TO "PARAMETER". PRESS "MENU/OK"
2. TO ACCESS THE REQUIRED TIMER PRESS THE "UP" ARROW KEY UNTIL THE DESIRED TIMER IS DISPLAYED.
3. PRESS THE "RIGHT" ARROW UNTIL TIME VALUE FLASHES.
4. MODIFY THE TIME VALUE USING THE "UP" OR "DOWN" ARROW KEYS.
5. VALIDATE THE CHANGES BY PRESSING THE "MENU/OK", PRESS "MENU/OK" AGAIN WHEN ASKED TO CONFIRM CHANGES.
6. PRESS "MENU/OK" TO RETURN TO MAIN SCREEN.

PR1 – SETTINGS

BIT REF.	DESCRIPTION	TIMER RESOLUTION	FACTORY SETTING
TT1 – t	INLET PUMP ON DELAY	MIN:SEC	00:10
TT2 – t	OUTLET PUMP OFF DELAY	MIN:SEC	01:00
TT3 – t	INFLUENT FLOW FAULT DELAY	MIN:SEC	00:30
TT4 – t	INLET PUMP FAIL TO RUN	MIN:SEC	00:30
TT5 – t	OUTLET PUMP FAIL TO RUN	MIN:SEC	00:30
TT6 – t	LOW SPEED ON DELAY	MIN:SEC	00:00
TT7 – t	LOW SPEED OFF DELAY	MIN:SEC	00:00

TS1 – SETTINGS

FAN ON/OFF	70 °F

TS2 – SETTINGS

HEATER ON/OFF	60 °F

DEVICE SETTINGS

UT1,2 – SETPOINTS

WINDOW NUMBER	FUNCTION DESCRIPTION	DEFAULT SETTING	UT1 SETTINGS	UT2 SETTINGS
TXT 3	INPUT TYPE	VOLT	CURR	CURR
TXT 4	INPUT RANGE	2–10	4–20	4–20
TXT 9	UNITS OF MEASURE	°C	IN.	IN.
TXT 11	UNIT	%	4–20	4–20
TXT 12	DECIMAL POINT	111.1	11.11	11.11
TXT 13	DISPLAY RANGE LOW	0.0	0.0	0.0
TXT 14	DISPLAY RANGE HIGH	100.0	3000.0	3000.0
TXT 15	DISPLAY	REL.UN	REL.UN	REL.UN
TXT 19	R1.FUNCTION	SETP	SETP	SETP
TXT 20	R1.CONTROL	N.O.	N.O.	N.O.
TXT 21	R1.SETP	50.0	*	*
TXT 22	ACT. DIR	INCR	INCR	INCR
TXT 23	R1.HYST	1.0	*	*
TXT 24	ERR.ACT	NONE	NONE	CLOSE
TXT 25	ON.DEL	0 SEC.	0 SEC.	0 SEC.
TXT 26	OFF.DEL	0 SEC.	0 SEC.	0 SEC.
TXT 36	ANA.OUT	VOLT	CURR	CURR
TXT 37	O.RANGE	0–20	4–20	4–20
TXT 38	OUT.ERR	23MA	23MA	23MA

NOTES:

1. RELAY 1 ON UT1 IS THE MINIMUM INFLUENT FLOW SET POINT. RELAY 1 ON UT2 IS THE EFFLUENT FLOW START LEVEL SET POINT.
2. * SETPOINT SET IN THE FIELD.
3. TO ALTER SETPOINTS, PRESS OK FROM THE MAIN SCREEN. THEN PRESS OK ON "NOADV SETP". USE THE OK BUTTON TO SCROLL THROUGH SETPOINTS AND THE ARROWS TO ALTER SETPOINTS. USE THE OK BUTTON TO GO THROUGH ALL SETPOINTS TO SAVE.

TO ALTER THE VALUE OF R1.SETP OR R2.SETP:

1. TO CHANGE THE SETPOINT FOR RELAY 1 (R1.SETP), PRESS THE UP ARROW ONCE FROM THE MAIN SCREEN. TO CHANGE THE SETPOINT FOR RELAY 2 (R2.SETP), PRESS THE DOWN ARROW ONCE FROM THE MAIN SCREEN.
2. WHEN ON THE SETPOINT PAGE FOR THE DESIRED RELAY, USE THE UP AND DOWN KEYS TO ADJUST THE SETPOINT AND PRESS OK TO SAVE THE NEW VALUE. PRESS AND HOLD OK TO GO BACK ONE PAGE WITHOUT SAVING.

DEVICE SETTINGS

VFD1,2 – ALTIVAR 320

PARAMTER GROUP	CODE	DESCRIPTION	DEFAULT	FACTORY SETTING VFD1	FACTORY SETTING VFD2
CONFIGURE (ConF)	Inr	RAMP INCREMENT	0.1		
↓	ACC	ACCELERATION	3 SEC.	5 SEC.	5 SEC.
↓	dEC	DECELERATION	3 SEC.	5 SEC.	5 SEC.
FULL SETTINGS (FULL)	LSP	LOW SPEED	0 HZ	20 HZ	20 HZ
↓	HSP	HIGH SPEED	bFr	60 HZ	60 HZ
↓	ItH	MOTOR THERMAL CURRENT	**	*	*
↓	uFr	IR COMPENSATION	100%		
SETTINGS (SEt)	SLP	SLIP COMPENSATION	100%		
	SFr	SWITCHING FREQUENCY	4.0 kHZ		
	SP2	PRESET SPEED 2	10 HZ	60HZ	30HZ
	Ctd	CURRENT THRESHOLD	**	12.4	12.4
CONFIGURE (ConF)	bFr	STD. MOTOR FREQUENCY	50 HZ	60 HZ	60 HZ
↓	tFr	MAX FREQUENCY	60 HZ	60 HZ	60 HZ
↓	nPr	RATED MOTOR POWER		NAMEPLATE	NAMEPLATE
FULL SETTINGS (FULL)	CoS	MOTOR 1 COSINUS PHI		NAMEPLATE	NAMEPLATE
↓	unS	RATED MOTOR VOLTAGE		NAMEPLATE	NAMEPLATE
↓	nCr	RATED MOTOR CURRENT		NAMEPLATE	NAMEPLATE
↓	FrS	RATED MOTOR FREQUENCY	50 HZ	NAMEPLATE	NAMEPLATE
MTR CONTROL (drC)	nSP	RATED MOTOR SPEED		NAMEPLATE	NAMEPLATE
↓	Ctt	MOTOR CONTROL TYPE	Std		
↓	nrd	NOISE REDUCTION	no		
ASYNC MOTOR (ASY)	SFC	K SPEED LOOP FILTER	65		
CONFIGURE (ConF)	tCC	2/3 WIRE CONTROL	2C		
↓	tCt	2 WIRE TYPE	trn	LEL	LEL
↓	Frd	FORWARD ASSIGN	LI1		
FULL SETTINGS (FULL)	rrS	REVERSE ASSIGN	LI2	nO	nO
↓	AI3–CrL3	AI3 MIN VALUE	0 mA	4 mA	*
↓	AI3–CrH3	AI3 MAX VALUE	20 mA		*
↓	Ao1t	AO1 TYPE	0A		
I/O CONFIG (I–O)	Ao1	ANALOG OUTPUT ASSIGNMENT	no	oFr	oFr
	R1	R1 ASSIGNMENT	FLt	run	run
	R2	R2 ASSIGNMENT	no	Cta	Cta
	R2d	R2 DELAY TIME (ms)	0 ms	*	*
CONFIGURE (ConF)	Fr1	REF 1 CHANNEL	AI1	LCC	LCC
↓	CHCF	PROFILE	SIn	SEP	SEP
↓	rFC	REF 2 SWITCHING	Fr1		LI4
FULL SETTINGS (FULL)	Fr2	REF 2 CHANNEL	no		AI3
↓					
COMMAND (CtL)					
CONFIGURE (ConF)	Stt	TYPE OF STOP	rMP	nSt	nSt
↓	PSS–PS2	2 PRESET SPEEDS	no	LI3	no
FULL SETTINGS (FULL)					
↓					
APP FUNC (FUn)					

NOTES:

1. THE ABOVE IS A PARTIAL LISTING OF SET–POINTS. REFER TO THE INSTRUCTION MANUAL FOR A COMPLETE PARAMETER LISTING.
2. VERIFY MOTOR NAMEPLATE DATA. ENTER PARAMETERS AS PRINTED ON MOTOR NAMEPLATE.
3. ** INDICATES A DEFAULT SETTING SPECIFIC TO THE VFD SIZE. THE DEFAULT SETTING IS THE NOMINAL DRIVE OUTPUT CURRENT.
4. * INDICATES A PARAMETER THAT MUST BE SET BY THE START–UP TECHNICIAN.
5. THE ABOVE SETPOINTS CAN BE ACCESSED BY ENTERING THE CONF > FULL MENU.
6. VFD1 (INLET PUMP VFD) OPERATES AT TWO SPEEDS. THE NORMAL SPEED WILL BE SET BY THE DISPLAY REFERENCE (REF SPEED). THE LOW SPEED WILL BE SET BY PRESET SPEED 2 (PARAMETER SP2).
7. VFD2 (OUTLET PUMP VFD) IS CONTROLLED BY A 4–20mA SIGNAL IN AUTO. AI3–CrL3 IS THE mA OF THE LOW SPEED LEVEL SETPOINT FROM THE PRESSURE TRANSDUCER. AI3–CrH3 IS THE HIGH SPEED LEVEL SETPOINT FROM THE PRESSURE TRANSDUCER. THE OUTPUT SPEED OF THE VFD WILL VARY LINEARLY BETWEEN THE LOW AND HIGH SPEED BASED ON THE LOW SPEED LEVEL AND HIGH SPEED LEVEL SETPOINTS. IN HAND THE SPEED WILL BE SET BY THE DISPLAY REFERENCE (REF).

Rev	Revision Description	Date	Rev By	Approver

Enviro-Care
A WAMGROUP® Company

PROPERTY OF ENVIRO-CARE COMPANY. ALL RIGHTS RESERVED. NO PART OF THIS DRAWING MAY BE REPRODUCED IN ANY FORM WITHOUT WRITTEN PERMISSION FROM ENVIRO-CARE. ENVIRO-CARE COMPANY RESERVES THE RIGHT TO ALTER DATA OR THE DESIGN OF ITS EQUIPMENT AT ANY TIME WITHOUT PRIOR NOTICE AND WITHOUT ANY OBLIGATION WHATSOEVER.

Title
CONTROL PANEL: 3/60/480
INLET AND OUTLET PUMP SYSTEM
MAIN CONTROL PANEL

Designer	Checker	Date	Sheet
MBS	ALS	08/14/19	5 of 7

Third Angle Projection

Drawing Number: WEC218286Z-CP02

Revision: 0

ELEMECH PROJECT: EVC7838A5

Z:\Enviro-Care\7800\EVC7838 - Frederick Winchester, VA\Submittal\EVC7838A6

SEQUENCE OF OPERATION

CONTROL POWER ON-DELAY:
Each time the control panel power supply is cycled, the programmable relay will allow all solid state devices to become fully energized before enabling the control power circuit.

INLET PUMP MODES OF OPERATION:
ON:
When the Inlet Pump selector switch is in the ON position and the Inlet Pump permissive signal is enabled, the Inlet Pump will begin to run continuously. If the Inlet Pump permissive signal is removed the Inlet Pump will stop immediately. When the Inlet Pump permissive has been restored for the time set in the Inlet Pump On Delay the Inlet Pump will resume running continuously. If the level in the inlet tank reaches the middle level while the pump is running for the time set in the Inlet Pump Low Speed On delay the inlet pump will run at low speed. The inlet pump will continue to run at low speed until the level has dropped below the middle level for the time set in the Inlet Pump Low Speed Off delay.
OFF:
When the Inlet Pump selector switch is in the stop position the Inlet Pump will stop immediately.

Notes:
1. The Inlet Pump will fault if no influent flow is detected by the influent pressure transducer as outlined in the Inlet Pump faults below.

OUTLET PUMP MODES OF OPERATION:
HAND:
When the Outlet Pump selector switch is in HAND the Outlet Pump will run continuously at the speed set through the VFD potentiometer. When the selector switch is in OFF the Outlet Pump will be off.
AUTO:
When the Outlet Pump selector switch is in AUTO the Outlet Pump will begin to run when the effluent flow from the Beast reaches the start level set in the universal transmitter (detected by the effluent pressure transducer). The Outlet Pump speed will vary linearly between the low speed and high speed based on the low speed level and high speed level settings in the VFD and the effluent flow pressure readings. The Outlet Pump will continue to run after the level falls below the start level for the time set in the Outlet Pump Off Delay.

EMERGENCY STOP:
If the Emergency Stop (E-Stop) pushbutton is pressed the Inlet Pump and Outlet Pump will stop immediately and the control power on light will de-energize. To re-set, pull out the E-Stop pushbutton, and press the System Reset pushbutton.

INLET PUMP FAULTS/Resets:
1. A fault occurs when the Inlet Pump VFD detects high current. The Inlet Pump will stop immediately and the Inlet Pump Fault light will be illuminated.
   Reset: Push the System Reset button.

2. A fault occurs when the programmable relay has called the Inlet Pump to run but does not receive running confirmation within the time set in the Inlet Pump fail to run timer. When this fault occurs the Inlet Pump will stop immediately, and the Inlet Pump fault light will be illuminated.
   Reset: Push the System Reset button.

3. A fault occurs when the Inlet Pump is running but the influent pressure transducer does not detect an influent flow above the inlet pressure transducer influent flow level (set in the universal transmitter) for the time set in the influent flow fault delay timer. When this fault occurs the Inlet Pump will stop immediately, and the Inlet Pump fault light will be illuminated.
   Reset: Push the System Reset button.

4. A fault occurs when the Inlet Pump motor thermostat (if supplied) is tripped. The Inlet Pump will stop immediately.
   Reset: This fault will automatically reset when the Inlet Pump motor returns to a safe temperature.

5. A fault occurs when the Inlet Pump motor dry run temperature sensor RTD reaches the temperature set in the Inlet Pump temperature controller. When this fault occurs the Inlet Pump will stop immediately and the Inlet Pump fault light will be illuminated.
   Reset: Reset the temperature controller and push the System Reset button.

OUTLET PUMP FAULTS/Resets:
6. A fault occurs when the Outlet Pump VFD detects high current. The Outlet Pump will stop immediately and the Outlet Pump Fault light will be illuminated.
   Reset: Push the System Reset button.

7. A fault occurs when the programmable relay has called the Outlet Pump to run but does not receive running confirmation within the time set in the Outlet Pump fail to run timer. When this fault occurs the Outlet Pump will stop immediately, and the Outlet Pump fault light will be illuminated.
   Reset: Push the System Reset button.

8. A fault occurs when the Outlet Pump motor thermostat (if supplied) is tripped. The Outlet Pump will stop immediately.
   Reset: This fault will automatically reset when the Inlet Pump motor returns to a safe temperature.

9. A fault occurs when the Outlet Pump motor dry run temperature sensor RTD reaches the temperature set in the Outlet Pump temperature controller. When this fault occurs the Inlet Pump will stop immediately and the Outlet Pump fault light will be illuminated.
   Reset: Reset the temperature controller and push the System Reset button.

COMMON ALARM:
The Common Alarm Horn will be activated when faults 1-3,5-7, or 9 occur. The alarm horn can be silenced by pressing the Alarm Silence pushbutton on the control panel. Silencing the alarm will not clear the fault.

FIELD WIRING DIAGRAM

WARNING:
DAMAGE RESULTING FROM INSTALLATION OF TOP ENTRY CONDUIT WILL VOID WARRANTY
- USE PROPER FITTINGS, MYERS TYPE 4 OR EQUAL
- PROTECT INTERIOR DEVICES FROM INSTALLATION DEBRIS
- CONDUIT MUST BE SEALED WATERTIGHT TO PREVENT WATER ENTRY

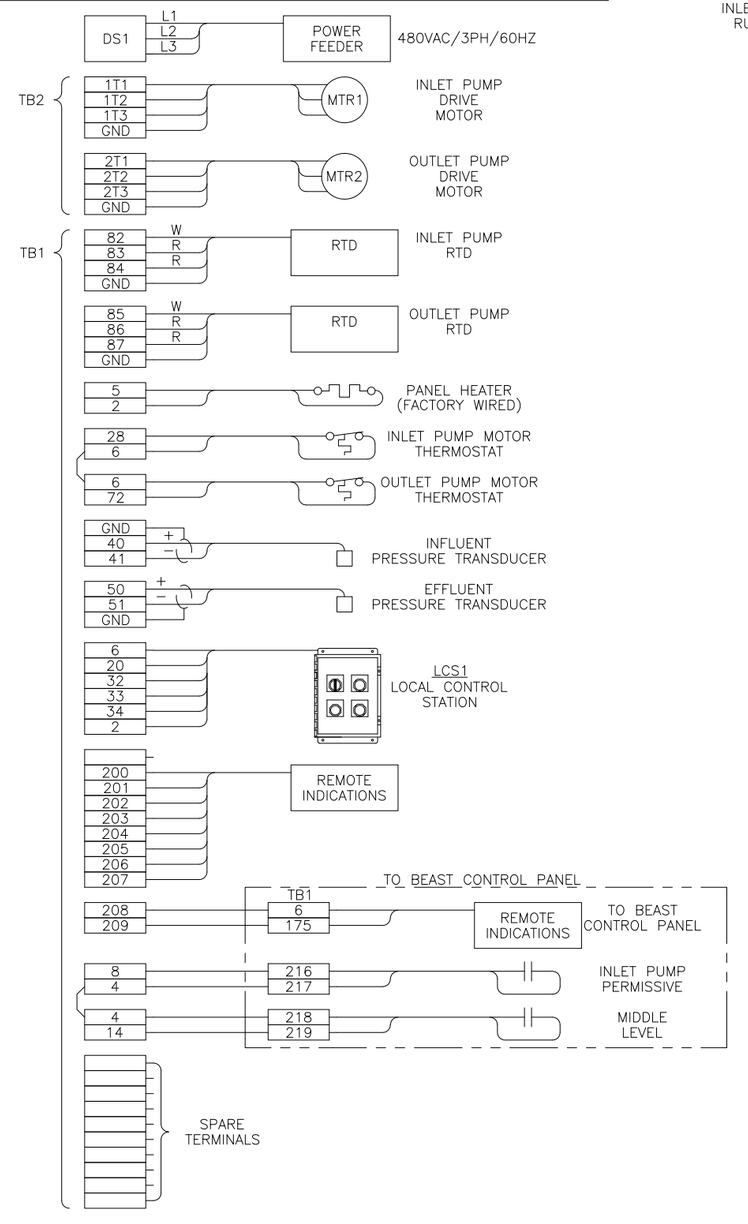

DRY OUTPUT CONTACTS

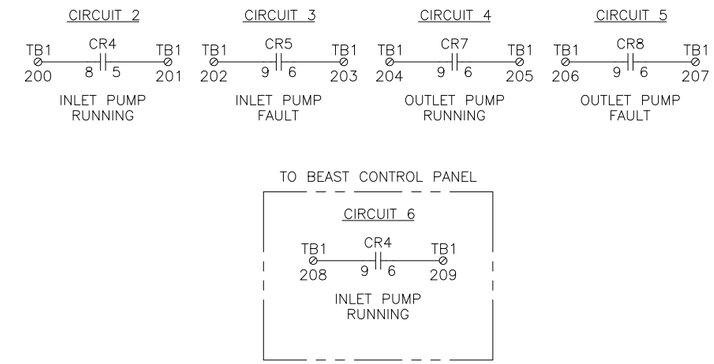

MAX. CONTROLLED LOAD: 10A @ 120VAC

NOTE: BRANCH CIRCUIT PROTECTION PROVIDED BY OTHERS PER N.E.C.

DB1 DETAIL

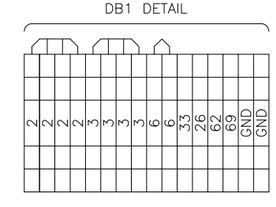

Rev	Revision Description	Date	Rev By	Approver

Enviro-Care
A WAMGROUP® Company

PROPERTY OF ENVIRO-CARE COMPANY. ALL RIGHTS RESERVED. NO PART OF THIS DRAWING MAY BE REPRODUCED IN ANY FORM WITHOUT WRITTEN PERMISSION FROM ENVIRO-CARE. ENVIRO-CARE COMPANY RESERVES THE RIGHT TO ALTER DATA OR THE DESIGN OF ITS EQUIPMENT AT ANY TIME WITHOUT PRIOR NOTICE AND WITHOUT ANY OBLIGATION WHATSOEVER.

Title
CONTROL PANEL; 3/60/480
INLET AND OUTLET PUMP SYSTEM
MAIN CONTROL PANEL

Designer	Checker	Date	Sheet
MBS	ALS	08/14/19	6 of 7

Third Angle Projection

Drawing Number	Revision
WEC218286Z-CP02	0

ELEMECH PROJECT: EVC7838A6

Z:\Enviro-Care\7800\EVC7838 - Frederick Winchester, VA\Submittal\EVC7838A7

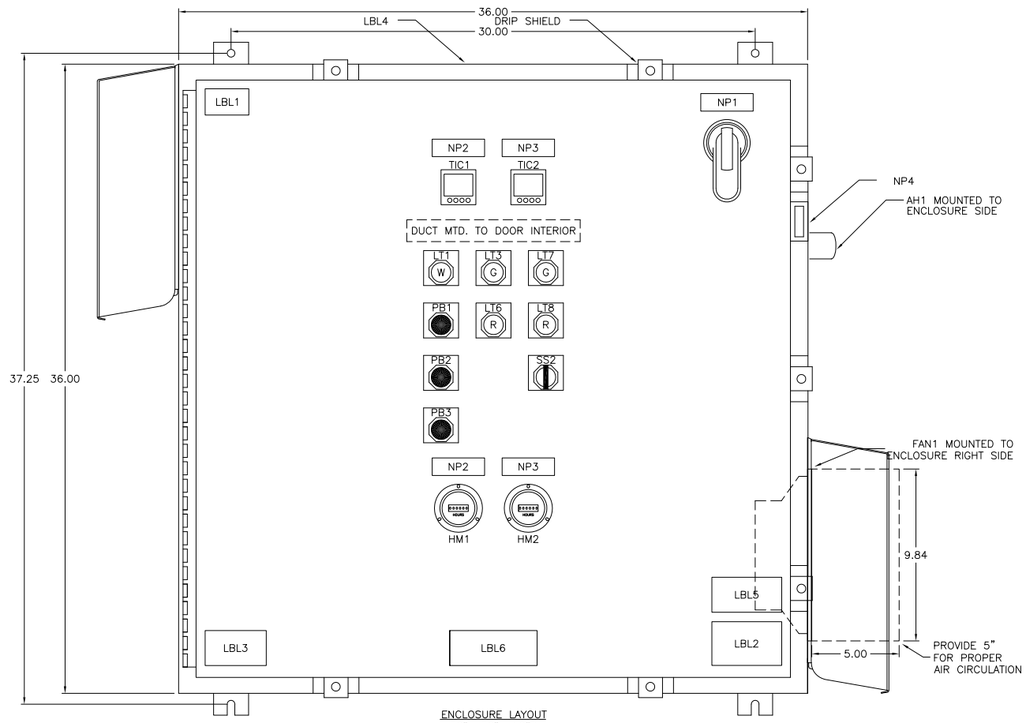

ENCLOSURE LAYOUT
36"Hx36"Wx12"D
NEMA 4X, 304 STAINLESS STEEL

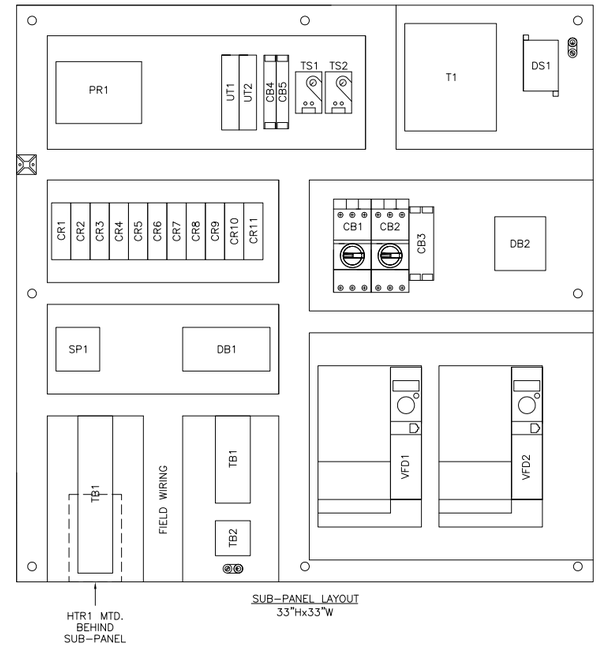

SUB-PANEL LAYOUT
33"Hx33"W

PILOT DEVICE LEGEND PLATES:
LT1 – CONTROL POWER ON
LT2 – INLET PUMP READY
LT3 – INLET PUMP RUNNING
LT4 – INLET PUMP RUNNING
LT5 – INLET PUMP NOT RUNNING
LT6 – INLET PUMP FAULT
LT7 – OUTLET PUMP RUNNING
LT8 – OUTLET PUMP FAULT
PB1 – EMERGENCY STOP
PB2 – SYSTEM RESET
PB3 – ALARM SILENCE
SS1 – INLET PUMP OFF–ON
SS2 – OUTLET PUMP HAND–OFF–AUTO

NAMEPLATES:
NP1 – 480VAC–3PH–60HZ
NP2 – INLET PUMP
NP3 – OUTLET PUMP
NP4 – ALARM HORN – FRAGILE DO NOT USE TO LIFT

LABEL DESCRIPTION:
LBL1 – WARNING: MULTIPLE SUPPLY SOURCES
OPEN ALL DISCONNECTS BEFORE SERVICING
EQUIPMENT OR OTHER UNIT WIRING.
LBL2 – DANGER HIGH VOLTAGE
ENTRY BY QUALIFIED PERSON ONLY
LBL3 – ELEMECH ELECTRICAL CONTROL SYSTEMS
LBL4 – WARNING DAMAGE RESULTING FROM
INSTALLATION OF TOP ENTRY
CONDUIT WILL VOID WARRANTY
–USE PROPER FITTINGS, MEYERS
TYPE 4 OR EQUAL
–PROTECT INTERIOR DEVICES
FROM INSTALLATION DEBRIS
LBL5 – DANGER ARC FLASH AND SHOCK HAZARD
FOLLOW ALL REQUIREMENTS
NFPA 70E FOR SAFE WORK
PRACTICES AND FOR PERSONAL
PROTECTIVE EQUIPMENTS.
LBL6 – ENVIRO–CARE

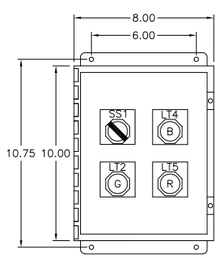

ENCLOSURE LAYOUT
10"Hx8"Wx4"D
NEMA 4X STAINLESS STEEL

Rev	Revision Description	Date	Rev By	Approver

Enviro-Care
A WAMGROUP® Company

PROPERTY OF ENVIRO-CARE COMPANY. ALL RIGHTS RESERVED. NO PART OF THIS DRAWING MAY BE REPRODUCED IN ANY FORM WITHOUT WRITTEN PERMISSION FROM ENVIRO-CARE. ENVIRO-CARE COMPANY RESERVES THE RIGHT TO ALTER DATA OR THE DESIGN OF ITS EQUIPMENT AT ANY TIME WITHOUT PRIOR NOTICE AND WITHOUT ANY OBLIGATION WHATSOEVER.

Title
CONTROL PANEL: 3/60/480
INLET AND OUTLET PUMP SYSTEM
MAIN CONTROL PANEL

Designer	Checker	Date	Sheet
MBS	ALS	08/14/19	7 of 7

Third Angle Projection

Drawing Number: WEC218286Z-CP02

Revision: 0

ELEMECH PROJECT: EVC7838A7