FREDERICK-WINCHESTER
SERVICE AUTHORITY

OPEQUON WATER RECLAMATION FACILITY
FOG FACILITY UPGRADES

INVITATION TO BID NO 202008
APRIL 2020

LOCATION MAP
1" = 8000'

COMMONWEALTH OF VIRGINIA
JOEL K. PETERY
Lic. No.036763
04-21-2020
PROFESSIONAL ENGINEER

Hazen

HAZEN AND SAWYER
1555 ROSENEATH ROAD
RICHMOND, VIRGINIA 23230

OWNER:

FREDERICK-WINCHESTER SERVICE AUTHORITY
107 N KENT STREET
WINCHESTER, VA 22601

PERMIT SET
NOT FOR CONSTRUCTION

GENERAL NOTES

1. ALL EXISTING INFORMATION SHOWN ON THESE DRAWINGS INCLUDING LOCATION, DIMENSIONS, ELEVATIONS, AND CONFIGURATIONS IS DERIVED FROM THE TOPOGRAPHIC SURVEY AND BOUNDARY SURVEY OF TAX MAP NO. 132-1-1 PERFORMED BY TRIAD ENGINEERING AND DATED JANUARY 29, 2018.

2. THE BASIS OF COORDINATES AND DATUM IS NAD83 / NAVD88

3. CONTRACTOR SHALL VERIFY FIELD CONDITIONS BEFORE COMMENCEMENT OF ANY DEMOLITION OR CONSTRUCTION ACTIVITIES. CONTRACTOR SHALL VERIFY EXISTING ELEVATIONS AND DIMENSIONS WHERE NEW WORK WILL MATCH EXISTING. DISCREPANCIES SHALL BE BROUGHT TO THE ATTENTION OF THE ENGINEER FOR RESOLUTION PRIOR TO THE COMMENCEMENT OF WORK.

4. CITY HAS PAID FOR AND OBTAINED A BUILDING PERMIT. CONTRACTOR SHALL OBTAIN ALL OTHER NECESSARY PERMITS FROM THE APPROPRIATE AUTHORITIES, DEPARTMENTS, AND/OR AGENCIES HAVING JURISDICTION PRIOR TO COMMENCING WORK.

5. CONTRACTOR SHALL TAKE CARE TO AVOID DAMAGE TO EXISTING PAVEMENT, TREES, VEGETATION, STRUCTURES, AND UTILITIES THAT ARE NOT INDICATED TO BE DEMOLISHED OR REMOVED. ANY DAMAGE TO EXISTING PAVEMENT, TREES, VEGETATION, STRUCTURES, AND UTILITIES NOT INDICATED TO BE DEMOLISHED OR REMOVED SHALL BE REPAIRED AT THE CONTRACTOR'S EXPENSE.

6. UTILITIES HAVE BEEN PLOTTED FROM AVAILABLE SURVEY INFORMATION. IT IS THE CONTRACTOR'S RESPONSIBILITY TO VERIFY THEIR EXACT LOCATION AND TO AVOID DAMAGE TO THEM. THE CONTRACTOR SHALL CONTACT VIRGINIA 811 AT PHONE NUMBER 811 OR 1-800-552-7001 TO REQUEST UNDERGROUND UTILITY LOCATION MARK-OUT AT LEAST THREE (3) WORKING DAYS BUT NO MORE THAN TEN (10) WORKING DAYS PRIOR TO BEGINNING EXCAVATION, INCLUDING SOIL DRILLING. THE CONTRACTOR SHALL ALSO CONTACT AND REQUEST UTILITY LOCATION MARK-OUT FROM BURIED UTILITY OWNERS WITH UTILITIES ON THE PROJECT SITE THAT ARE NOT PARTICIPANTS OF VIRGINIA 811.

7. WHERE PROPOSED WORK IS IN THE VICINITY OF UTILITY POLES, SUCH THAT SUPPORT OF THE POLE(S) WILL BE REQUIRED, THE CONTRACTOR SHALL BE RESPONSIBLE FOR NOTIFYING THE UTILITY OF THE WORK. IT WILL BE THE RESPONSIBILITY OF THE CONTRACTOR TO COORDINATE WITH THE UTILITY FOR SUPPORT OF THE POLE.

8. WHERE OVERHEAD POWER LINES ARE PRESENT, CONTRACTOR MUST CONTACT THE UTILITY PRIOR TO CONSTRUCTION ACTIVITIES TO DETERMINE THE MINIMUM REQUIRED EQUIPMENT CLEARANCE (MEC) DISTANCE BASED UPON LINE STRENGTH.

9. THE CONTRACTOR SHALL REMOVE AND DISPOSE OF ALL DEBRIS GENERATED DURING THE PROJECT OFF SITE AT A PROPERLY PERMITTED DISPOSAL FACILITY.

10. GROUNDWATER FROM ALL DE-WATERING OPERATIONS SHALL BE DISCHARGED TO AN ENVIRONMENTALLY ACCEPTABLE LOCATION IN ACCORDANCE WITH THE CONTRACT DOCUMENTS, OR AS DIRECTED BY THE ENGINEER.

ABBREVIATIONS

GENERAL

AC	ASBESTOS CEMENT
ADH	ADHESIVE
ADJ	ADJUSTABLE
AFF	ABOVE FINISHED FLOOR
AL, ALUM	ALUMINUM
ALLOW	ALLOWANCE/ALLOWABLE
ALT	ALTERNATE
APPROX	APPROXIMATE
ARCH	ARCHITECTURAL
ASPH	ASPHALT
B	BORING
BFE	BOTTOM OF FITTING ELEV
B	BASELINE
BL	BUILDING LINE
BLDG	BUILDING
BLK	BLOCK
BM	BENCH MARK
BOC	BACK OF CURB
BOM	BOTTOM OF MASONRY
BOT	BOTTOM
BRG	BEARING
CB	CATCH BASIN
CE	CONSTRUCTION EASEMENT
CF	CUBIC FEET
CFM	CUBIC FEET PER MINUTE
CL	CENTERLINE
CLR	CLEAR
CO	CLEANOUT
COL	COLUMN
CONC	CONCRETE
CONST	CONSTRUCTION
CONT	CONTINUOUS, CONTINUATION
CONTR	CONTRACTOR
CORP	CORPORATION
CP	CONTROL PANEL
CRS	COURSE
CST	CHEMICAL STORAGE TANK
CT	CERAMIC TILE
CTJ	CONTROL JOINT
CU	COPPER
CY	CUBIC YARD
DET	DETAIL
DIA OR Ø	DIAMETER
DIAG	DIAGONAL
DIM	DIMENSION
DISC	DISCONNECT
DISCH	DISCHARGE
DIST	DISTRIBUTION
DL	DEAD LOAD
DN	DOWN
DOZ	DOZEN
DP	DISTRIBUTION PANEL
D/S	DOWNSTREAM
DT	DAY TANK
DWG(S)	DRAWING(S)
DWL	DOWEL
EA	EACH
ECC	ECCENTRIC
ED	EQUIPMENT DRAIN
EE	EACH END
EF	EACH FACE OR EXHAUST FAN
EFF	EFFLUENT
EL	ELEVATION
ELEC	ELECTRICAL
EMH	ELECTRICAL MANHOLE
ENGR	ENGINEER
ENT	ENTRANCE
EOG	EDGE OF GRAVEL
EOP	EDGE OF PAVEMENT
EPX	EPOXY
EQ	EQUAL
EQPT	EQUIPMENT
ET	EXPANSION TANK
EUH	ELECTRIC UNIT HEATER
EW	EACH WAY
EXIST/EX	EXISTING
EXH	EXHAUST
EXP	EXPANSION
EXT	EXTERIOR
FF	FINISH FLOOR
FH	FIRE HYDRANT
FIG	FIGURE
FIN	FINISH
FIX	FIXTURE
FL	FLOOR
FLG	FLANGE
FT	FEET
FTG	FOOTING
GA	GAUGE
GAL	GALLON
GC	GENERAL CONTRACTOR
GEN	GENERATOR
GPM	GALLONS PER MINUTE
GR	GRADE
GW	GUY WIRE
HC	HEATING COIL
HDW	HARDWARE
HORIZ	HORIZONTAL
HP	HORSEPOWER OR HEAT PUMP
HPT	HIGH POINT
HVAC	HEATING, VENTILATION AND AIR CONDITIONING
HWY	HIGHWAY
HYD	HYDRAULIC
I	IRON
ID	INSIDE DIAMETER
IF	INSIDE FACE
IN	INCH
INCL	INCLUDED
INT	INTERIOR
INV	INVERT
J	JOIST
JB	JUNCTION BOX
JCT	JUNCTION
JT	JOINT
L	LENGTH/ANGLE
LB	POUND OR LINE BACK
LF	LINEAR FEET
LG	LONG
LPT	LOW POINT
MAINT	MAINTENANCE
MANUF	MANUFACTURER
MATL	MATERIAL
MAX	MAXIMUM
MECH	MECHANICAL
MET	METAL
MFR	MANUFACTURER
MG	MILLION GALLONS
MGD	MILLION GALLONS PER DAY
MH	MANHOLE
MIN	MINIMUM
MISC	MISCELLANEOUS
MO	MASONRY OPENING
MOD	MODIFY OR MODIFIED
MTD	MOUNTED
MTG	MOUNTING
MULT	MULTIPLE
N	NORTH
NA	NOT APPLICABLE
NAD '83	NORTH AMERICAN DATUM OF 1983
NAVD '88	NORTH AMERICAN VERTICAL DATUM OF 1988
NC	NORMALLY CLOSED
NF	NEAR FACE
NGVD '29	NATIONAL GEODETIC VERTICAL DATUM OF 1929
NIC	NOT IN CONTRACT
No.	NUMBER
NO	NORMALLY OPEN
NTS	NOT TO SCALE
OC	ON CENTER
OD	OUTSIDE DIAMETER OR OVERHEAD DOOR
OF	OUTSIDE FACE
OHE	OVERHEAD ELECTRIC
OPNG	OPENING
OPP	OPPOSITE
ORIG	ORIGINAL
PAR	PARALLEL
PC	POINT OF CURVE OR PIECE OR PERSONAL COMPUTER
PCC	POINT OF COMPOUND CURVE
PCF	POUNDS PER CUBIC FOOT
PERP	PERPENDICULAR
PI	POINT OF INTERSECTION
PL	PROPERTY LINE OR PLATE
PNL	PANEL
PP	POWER PANEL OR POWER POLE
PREFAB	PREFABRICATED
PROP	PROPOSED
PSF	POUNDS PER SQUARE FOOT
PSI	POUNDS PER SQUARE INCH
PT	POINT OF TANGENT/POINT
PVMT	PAVEMENT
PW	WATERLINE
QTY	QUANTITY
RAD	RADIUS
RECIR	RECIRCULATION
RECT	RECTANGULAR
REF	REFERENCE
REINF	REINFORCING
REM	REMOVE
REQD	REQUIRED
REST	RESTRAINED
REV	REVISE
RJ	RESTRAINED JOINT
RM	ROOM
RND	ROUND
RO	ROUGH OPENING
RT	RIGHT
R/W OR ROW	RIGHT OF WAY
S	SOUTH OR SLOPE
SB	SOIL BORING
SBL	SURVEY BASELINE
SCH	SCHEDULE
SECT	SECTION
SERV	SERVICE
SF	SQUARE FEET
SHT	SHEET
SI	SQUARE INCH
SIM	SIMILAR
SMH	STORM MANHOLE
SP	SUMP PUMP
SPEC	SPECIFICATION
SQ	SQUARE
SSP	SUBMERSIBLE SUMP PUMP
SST	STAINLESS STEEL
STA	STATION OR STACK
STD	STANDARD
STG	STORAGE OR STOP GATE (LOG)
STL	STEEL
STRU	STRUCTURAL
SUB	SUBSTITUTE
SUCT	SUCTION
SUR	SURFACE
SUSP	SUSPENDED
TBA	TO BE ABANDONED
TECH	TECHNICAL
TEMP	TEMPERATURE
THK	THICK
THRU	THROUGH
TOC	TOP OF CONCRETE
TOM	TOP OF MASONRY/MANHOLE
TOS	TOP OF SLAB/ TOP OF STEEL
TOL	TOLERANCE
TYP	TYPICAL
UG	UNDERGROUND
UGE	UNDERGROUND ELECTRIC
UGG	UNDERGROUND GAS
UNFIN	UNFINISHED
UNO	UNLESS NOTED OTHERWISE
UPS	UNINTERRUPTIBLE POWER SUPPLY
UTIL	UTILITY
VEL	VELOCITY
VERT	VERTICAL
VOL	VOLUME
W/	WITH
W/O	WITHOUT
WP	WATERPROOF
WPFG	WATER PROOFING
WT	WEIGHT
WTP	WATER TREATMENT PLANT
WV	WATER VALVE
XFMR	TRANSFORMER
XMH	EXISTING MANHOLE
YD	YARD
YR	YEAR

VALVES, FITTINGS, ETC.

BF	BLIND FLANGE
BV	BALL VALVE
CV	CHECK VALVE
CPLG	COUPLING
FLEX	FLEXIBLE
FLG	FLANGE
FTG	FITTING
GV	GATE VALVE
PV	PLUG VALVE

PROCESS PIPING

FOG	FAT, OILS, GREASE
HSW	HIGH STRENGTH WASTING
HW	HOT WATER
RW	RAW WATER
RWB	RAW WATER BACKWASH
RWI	RAW WATER INTAKE
TWAS	THICKENED WASTE ACTIVATED SLUDGE

LEGEND

SECTION AND DETAIL KEYING

DRAWINGS ARE CROSS REFERENCED IN THE FOLLOWING METHOD:

(A) A SECTION CUT ON DRAWING A3 IS IDENTIFIED AS FOLLOWS:

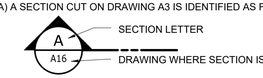

(B) THE SECTION SHOWN ON DRAWING A16 IS IDENTIFIED AS FOLLOWS:

DETAILS ARE CROSS REFERENCED IN A SIMILAR MANNER, EXCEPT DETAILS ARE IDENTIFIED BY A SQUARE WITH A NUMBER IN THE UPPER HALF.

STANDARD DETAILS ARE REFERENCED BY A UNIQUE SEVEN DIGIT NUMBER AND ARE SHOWN ON THE CONTRACT DRAWINGS BY ONE OF TWO METHODS:

1509203 → REFERENCED ITEM

OR:

SEE 1509203 → REFERENCED ITEM

STANDARD DETAILS ARE COMPILED IN APPROXIMATE NUMERICAL ORDER IN THE BACK OF THE CONTRACT DRAWINGS ON THE D* DRAWINGS.

MATERIALS

ASPHALT PAVING	GRADE OR EARTH
CHECKERED PLATE	GRAVEL
CONCRETE	GRATING
CONC FILL OR GROUT	ROCK

SYMBOLS

GATE VALVE	WALL PENETRATION
BUTTERFLY VALVE	MECHANICAL COUPLING
PLUG VALVE	WELDED JOINT
SWING CHECK VALVE	FLANGED JOINT
GLOBE VALVE	MECHANICAL, PUSH ON OR RESTRAINED JOINT
PINCH VALVE	SLUICE GATE
DIAPHRAGM VALVE	SLIDE GATE/STOP GATE
BALL VALVE	FLUSHING CONNECTION
BALL CHECK VALVE	HOSE BIBB
HARNESSED FLANGED ADAPTER	QUICK DISCONNECT FITTING
HARNESSED SLEEVE TYPE COUPLING	YARD HYDRANT
SLEEVE TYPE COUPLING	FIRE HYDRANT
HARNESSED FLEXIBLE COUPLING	SOIL BORING
CE CONSTRUCTION ENTRANCE	TS TEMPORARY SEEDING
SF SILT FENCE	PS PERMANENT SEEDING

LINETYPES

PROPOSED ITEMS	CENTER LINE
EXISTING ITEMS	MATCH LINE
HIDDEN ITEMS	EXISTING PAVEMENT
DEMOLITION ITEMS	

DWG No.	TITLE
GENERAL	
-	COVER
G1	GENERAL NOTES, ABBREVIATIONS, LEGEND, AND INDEX OF DRAWINGS
CIVIL	
C1	OVERALL SITE PLAN
C2	DEMOLITION SITE PLAN
C3	PROPOSED SITE PLAN
C4	ENLARGED PROPOSED SITE PLAN
C5	BUILDING PLAN AND ELEVATIONS
CD1	EROSION AND SEDIMENT CONTROL NOTES AND DETAILS
CD2	CITY STANDARD DETAILS
MECHANICAL	
M101	FOG RECEIVING STATION NO. 2 3D VIEW
M102	FOG RECEIVING STATION NO. 2 BOTTOM PIPING PLAN
M103	FOG RECEIVING STATION NO. 2 FLOOR PLAN
M104	FOG RECEIVING STATION NO. 2 SECTION VIEWS I
M105	FOG RECEIVING STATION NO. 2 SECTION VIEWS II
M201	SLUDGE HOLDING TANKS PLAN VIEW
M202	SLUDGE HOLDING TANKS DEMOLITION AND PROPOSED PLAN
M203	SLUDGE HOLDING TANKS PROPOSED SECTION
MD-1	STANDARD DETAILS
STRUCTURAL	
S1	GENERAL STRUCTURAL NOTES
S101	FOG RECEIVING STATION NO. 2 STATION PLAN AND SECTION
S102	FOG RECEIVING STATION NO. 2 DETAILS
S103	STANDARD DETAILS
HVAC	
H1	GENERAL NOTES, ABBREVIATIONS, AND SYMBOLS
H2	SCHEDULES AND SEQUENCE
H100	FOG RECEIVING STATION NO. 2 FLOOR PLAN AND DETAILS
INSTRUMENTATION	
I1	INSTRUMENTATION LEGEND AND GENERAL NOTES
I2	NETWORK ARCHITECTURE
I3	HWS AND FOG RECIEVING STATION NO 2 P&ID
I4	FOG DISTRIBUTION P&ID
ELECTRICAL	
E1	ELECTRICAL LEGEND AND SYMBOLS
E2	ELECTRICAL SITE PLAN
E3	FOG RECEIVING STATION NO. 2 POWER AND LIGHTNING PLAN
E4	EXISTING ELECTRICAL BUILDING PLAN
E5	FOG DISTRIBUTION ELECTRICAL POWER PLAN
E6	PANELS, SCHEDULES AND ELEVATIONS
E7	ONE-LINE DIAGRAMS AND CONDUIT RISERS
E8	STANDARD DETAILS

REV	ISSUED FOR	DATE	BY

PROJECT ENGINEER:	J. PETERY
DESIGNED BY:	J. PETERY
DRAWN BY:	D. CARR
CHECKED BY:	J. NEWBOLD
IF THIS BAR DOES NOT MEASURE 1" THEN DRAWING IS NOT TO FULL SCALE	0 1/2" 1"

PERMIT SET
DO NOT USE FOR CONSTRUCTION

COMMONWEALTH OF VIRGINIA
JOEL K. PETERY
Lic. No.036763
04-21-2020
PROFESSIONAL ENGINEER

Hazen

HAZEN AND SAWYER
1555 ROSENEATH ROAD
RICHMOND, VIRGINIA 23230

FREDERICK-WINCHESTER SERVICE AUTHORITY
WINCHESTER, VIRGINIA

OPEQUON WATER RECLAMATION FACILITY
FOG FACILITY UPGRADES

GENERAL NOTES, ABBREVIATIONS, LEGEND AND INDEX OF DRAWINGS

DATE:	APRIL 2020
HAZEN NO.:	31439-003
CONTRACT NO.:	202008
DRAWING NUMBER:	G1

File: O:\31439-RIC\31439-003\ENGINEERING\DRAWINGS\GENERAL\G01 Saved by ADARNELL Save date: 4/15/2020 8:32 AM
PLOT DATE: 4/17/2020 2:28 PM BY: JLUZON

NOTES:

1. WORK WITH IN AREA 2 SHALL BE PERFORMED INSIDE THE PIPE TUNNEL OF THE SLUDGE WASTE HOLDING TANKS SEE MECHANICAL DRAWINGS FOR DETAILS.

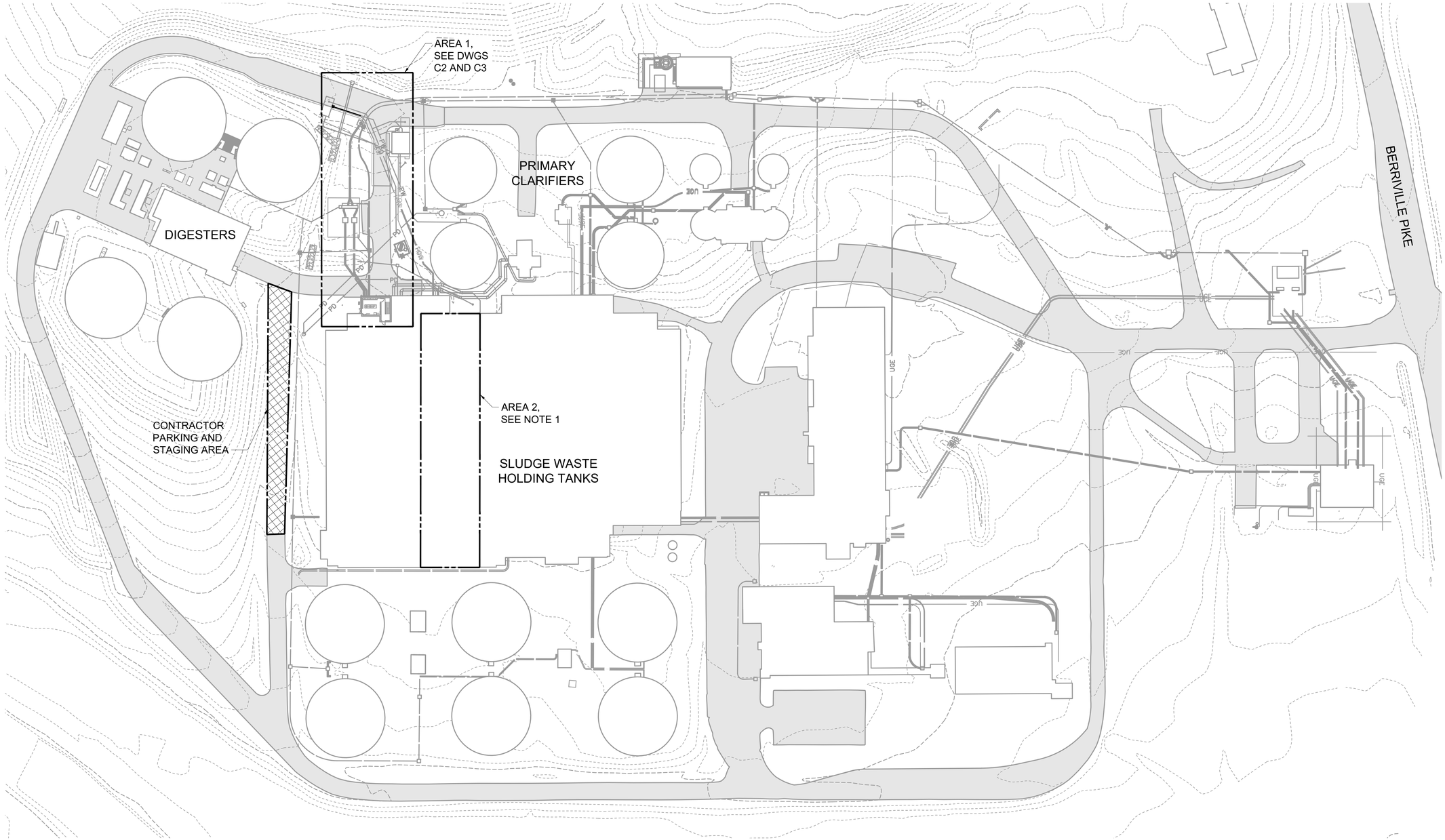

OVERALL SITE PLAN

1" = 60'

1"=60'-0"

60 30 0 60'

REV	ISSUED FOR	DATE	BY

PROJECT ENGINEER:	J. PETERY
DESIGNED BY:	B. PINTO
DRAWN BY:	D. CARR
CHECKED BY:	J. NEWBOLD

IF THIS BAR DOES NOT MEASURE 1" THEN DRAWING IS NOT TO FULL SCALE 0 1/2" 1"

PERMIT SET
DO NOT USE FOR
CONSTRUCTION

COMMONWEALTH OF VIRGINIA
JOEL K. PETERY
Lic. No.036763
04-21-2020
PROFESSIONAL ENGINEER

Hazen

HAZEN AND SAWYER
1555 ROSENEATH ROAD
RICHMOND, VIRGINIA 23230

FREDERICK-WINCHESTER SERVICE AUTHORITY
WINCHESTER, VIRGINIA

OPEQUON WATER RECLAMATION FACILITY
FOG FACILITY UPGRADES

CIVIL
OVERALL SITE PLAN

DATE:	APRIL 2020
HAZEN NO.:	31439-003
CONTRACT NO.:	202008
DRAWING NUMBER:	C1

File: O:\31439-R\C\31439-003\ENGINEERING\DRAWINGS\CIVIL\C1 Saved by EPAGSANJAN Save date: 3/5/2020 10:11 AM
PLOT DATE: 4/17/2020 2:28 PM BY: JLUZON

NOTES:

1. SAW CUT AND REMOVE PAVEMENT AS REQUIRED AND REPLACE PER SPECIFICATION 02 41 00 - DEMOLITION.
2. REMOVE EXISTING DUCTBANK TO THE EXTENT SHOWN.

KEY NOTES:

1. RELOCATE EXISTING KIOSK, SEE DWG E3.
2. REMOVE EXISTING YARD HYDRANT AND 4" PW.
3. DEMOLISH EXISTING ELECTRICAL POLE AND CONCRETE.
4. DEMOLISH PIPING, VALVES AND APPURTENANCES. TURN OVER EXISTING ELECTRICALLY ACTUATED PLUG VALVE TO OWNER.
5. INSTALL 6" BLIND FLANGE.

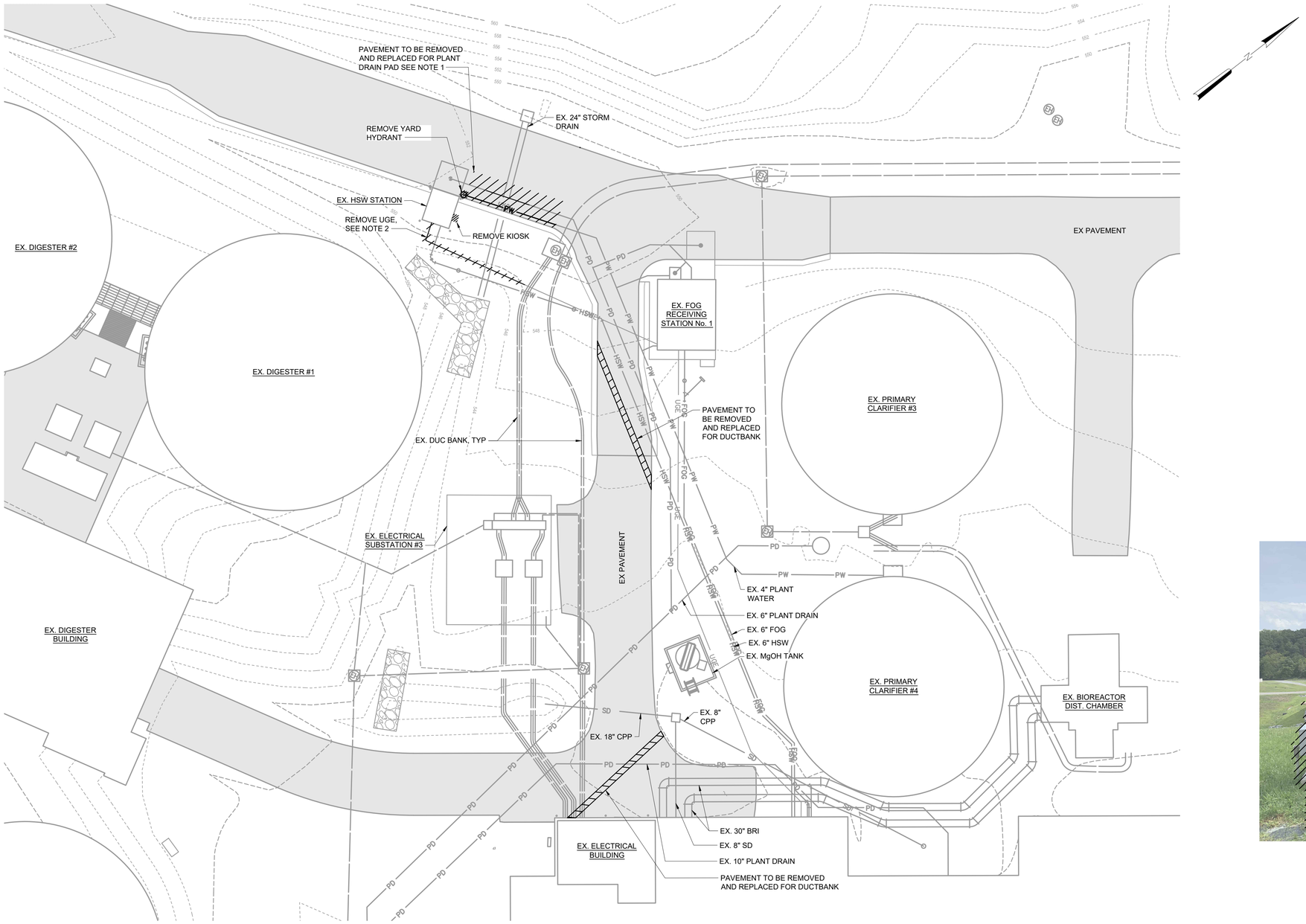

DEMOLIITON SITE PLAN
1" = 20'

EXISTING HSW STATION

1"=20'-0"

20 10 0 20'

REV	ISSUED FOR	DATE	BY

PROJECT ENGINEER:	J. PETERY
DESIGNED BY:	B. PINTO
DRAWN BY:	D. CARR
CHECKED BY:	J. NEWBOLD
IF THIS BAR DOES NOT MEASURE 1" THEN DRAWING IS NOT TO FULL SCALE	0 1/2" 1"

PERMIT SET
DO NOT USE FOR CONSTRUCTION

COMMONWEALTH OF VIRGINIA
JOEL K. PETERY
Lic. No.036763
04-21-2020
PROFESSIONAL ENGINEER

Hazen

HAZEN AND SAWYER
1555 ROSENEATH ROAD
RICHMOND, VIRGINIA 23230

FREDERICK-WINCHESTER SERVICE AUTHORITY
WINCHESTER, VIRGINIA

OPEQUON WATER RECLAMATION FACILITY
FOG FACILITY UPGRADES

CIVIL
DEMOLITION SITE PLAN

DATE:	APRIL 2020
HAZEN NO.:	31439-003
CONTRACT NO.:	202008
DRAWING NUMBER:	C2

File: O:\31439-R\C31439-003\ENGINEERING\DRAWINGS\CIVIL\C2 Saved by: JLUZON Save date: 4/17/2020 1:10 PM
PLOT DATE: 4/17/2020 2:28 PM BY: JLUZON

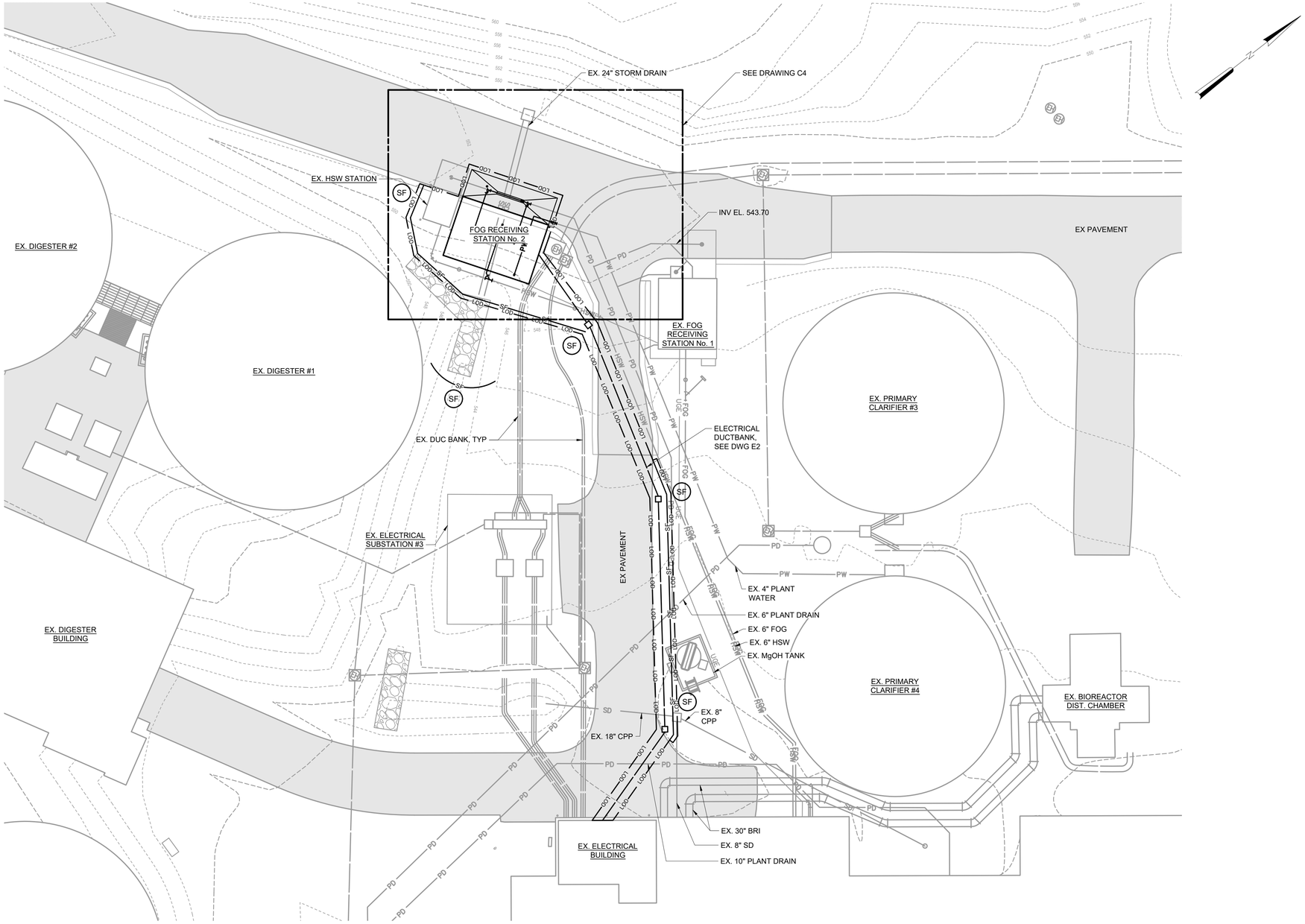

PROPOSED SITE PLAN

1" = 20'

1"=20'-0"

20 10 0 20'

REV	ISSUED FOR	DATE	BY

PROJECT ENGINEER:	J. PETERY
DESIGNED BY:	B. PINTO
DRAWN BY:	D. CARR
CHECKED BY:	J. NEWBOLD
IF THIS BAR DOES NOT MEASURE 1" THEN DRAWING IS NOT TO FULL SCALE	0 1/2" 1"

PERMIT SET
DO NOT USE FOR CONSTRUCTION

COMMONWEALTH OF VIRGINIA
JOEL K. PETERY
Lic. No.036763
04-21-2020
PROFESSIONAL ENGINEER

Hazen

HAZEN AND SAWYER
1555 ROSENEATH ROAD
RICHMOND, VIRGINIA 23230

FREDERICK-WINCHESTER SERVICE AUTHORITY
WINCHESTER, VIRGINIA

OPEQUON WATER RECLAMATION FACILITY
FOG FACILITY UPGRADES

CIVIL
PROPOSED SITE PLAN

DATE:	APRIL 2020
HAZEN NO.:	31439-003
CONTRACT NO.:	202008
DRAWING NUMBER:	C3

File: O:\31439-RIC\31439-003\ENGINEERING\DRAWINGS\CIVIL\C3 Saved by ADARNELL Save date: 4/7/2020 8:58 AM
PLOT DATE: 4/17/2020 2:28 PM BY: JLUZON

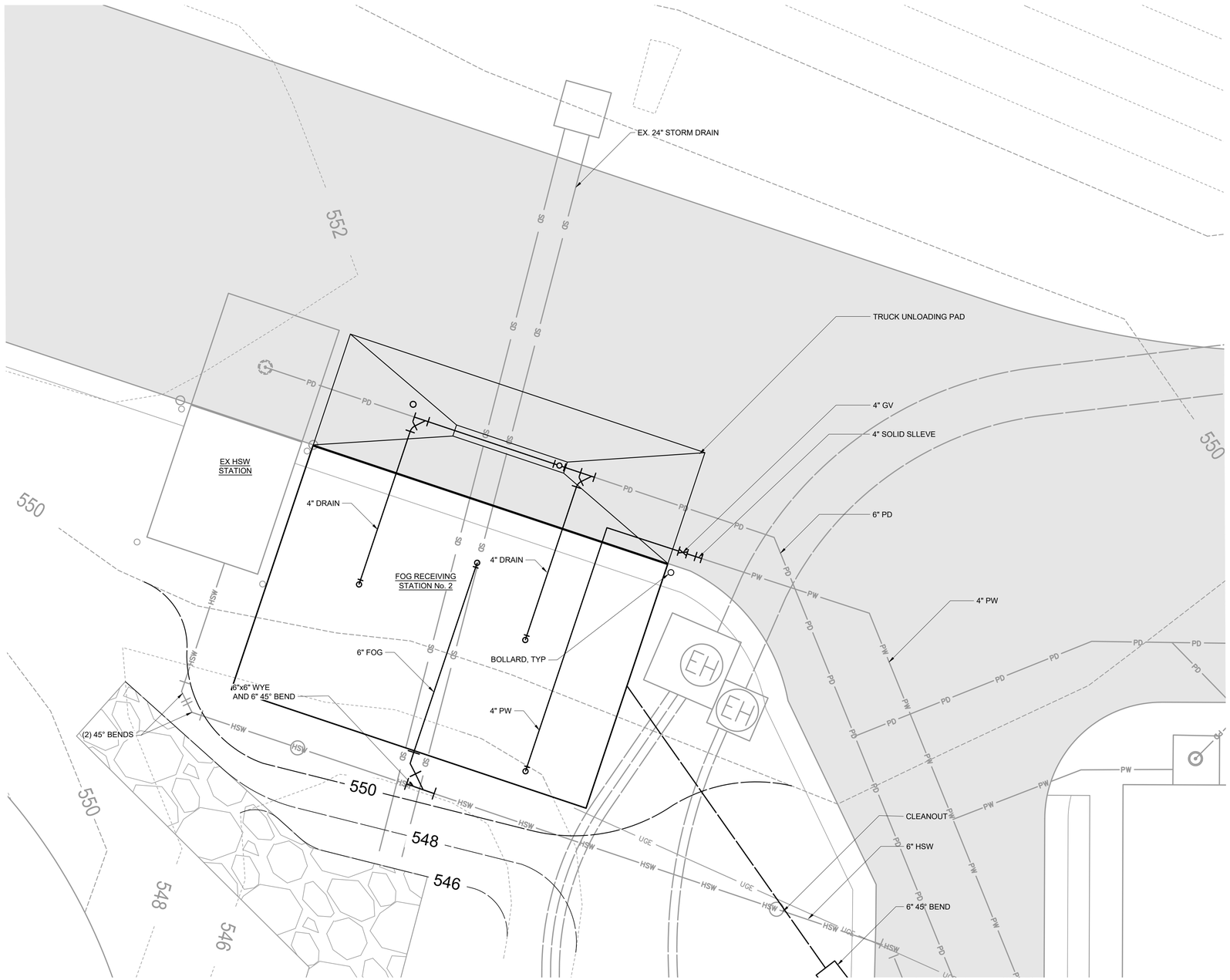

ENLARGED PROPOSED SITE PLAN

1" = 5'

1"=20'-0"

20 10 0 20'

REV	ISSUED FOR	DATE	BY

PROJECT ENGINEER:	J. PETERY
DESIGNED BY:	B. PINTO
DRAWN BY:	D. CARR
CHECKED BY:	J. NEWBOLD
IF THIS BAR DOES NOT MEASURE 1" THEN DRAWING IS NOT TO FULL SCALE	0 1/2" 1"

PERMIT SET
DO NOT USE FOR CONSTRUCTION

COMMONWEALTH OF VIRGINIA
JOEL K. PETERY
Lic. No. 036763
04-21-2020
PROFESSIONAL ENGINEER

Hazen

HAZEN AND SAWYER
1555 ROSENEATH ROAD
RICHMOND, VIRGINIA 23230

FREDERICK-WINCHESTER SERVICE AUTHORITY
WINCHESTER, VIRGINIA

OPEQUON WATER RECLAMATION FACILITY
FOG FACILITY UPGRADES

CIVIL
ENLARGED PROPOSED SITE PLAN

DATE:	APRIL 2020
HAZEN NO.:	31439-003
CONTRACT NO.:	202008
DRAWING NUMBER:	C4

File: O:\31439-RICS\31439-003\ENGINEERING\DRAWINGS\CIVIL\C4 Saved by ADARNELL Save date: 4/7/2020 8:30 AM
PLOT DATE: 4/17/2020 2:29 PM BY: JLUZON

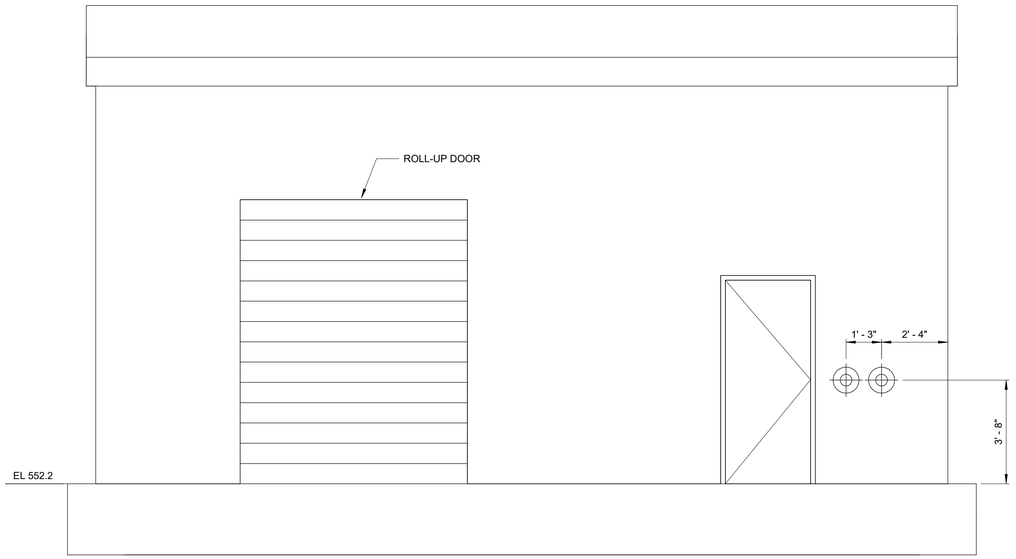

NORTH ELEVATION
3/8" = 1'-0"

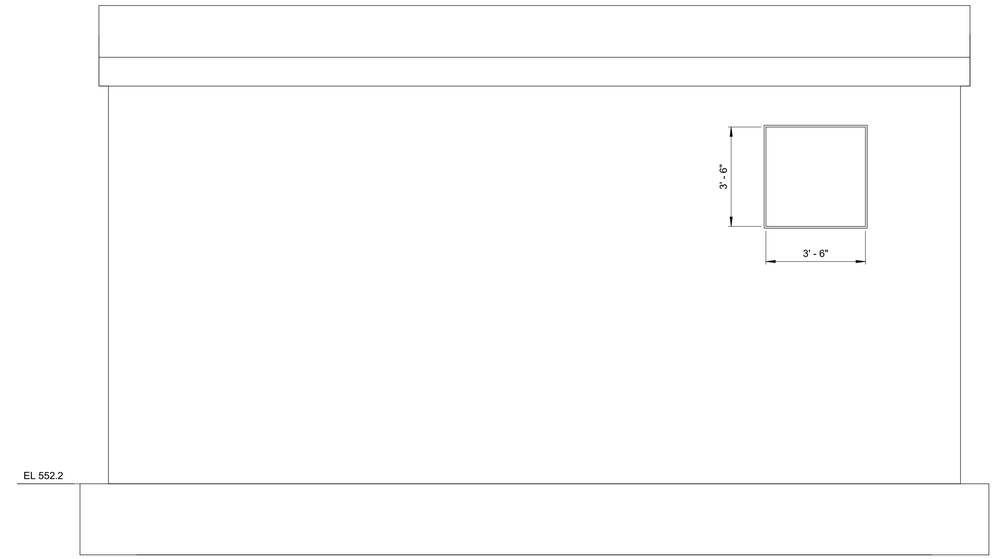

SOUTH ELEVATION
3/8" = 1'-0"

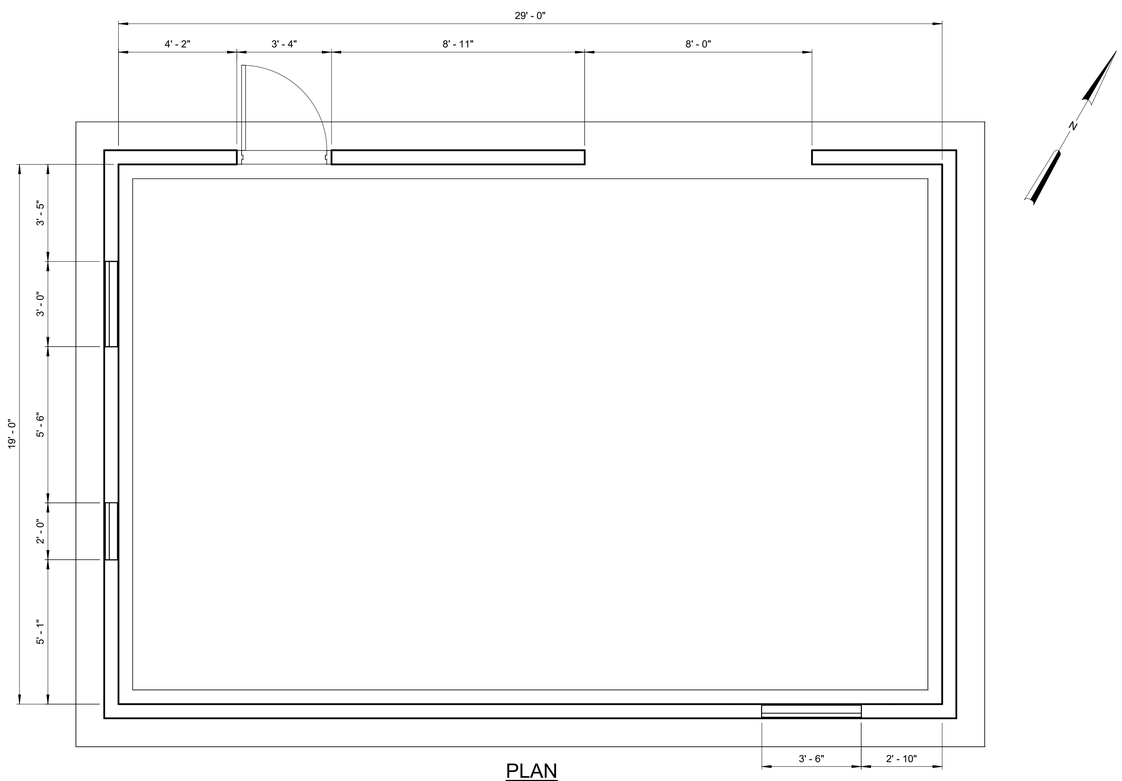

PLAN
3/8" = 1'-0"

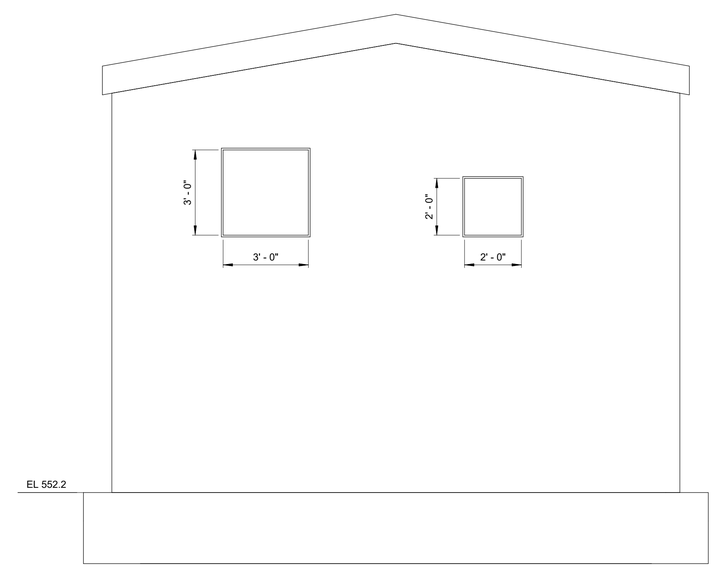

WEST ELEVATION
3/8" = 1'-0"

REV	ISSUED FOR	DATE	BY

PROJECT ENGINEER:	J. PETERY
DESIGNED BY:	J. PETERY
DRAWN BY:	E. PAGSANJAN
CHECKED BY:	J. NEWBOLD
IF THIS BAR DOES NOT MEASURE 1" THEN DRAWING IS NOT TO FULL SCALE	0 1/2" 1"

PERMIT SET
DO NOT USE FOR CONSTRUCTION

COMMONWEALTH OF VIRGINIA
JOEL K. PETERY
Lic. No.036763
04-21-2020
PROFESSIONAL ENGINEER

Hazen

HAZEN AND SAWYER
1555 ROSENEATH ROAD
RICHMOND, VIRGINIA 23230

FREDERICK-WINCHESTER SERVICE AUTHORITY
WINCHESTER, VIRGINIA

OPEQUON WATER RECLAMATION FACILITY
FOG FACILITY UPGRADES

FOG RECEIVING STATION NO. 2
BUILDING PLAN AND ELEVATION

DATE:	APRIL 2020
HAZEN NO.:	31439-003
CONTRACT NO.:	202008
DRAWING NUMBER:	C5

C:\Users\jluzon\Documents\31439-003-100-SS-MECH_jluzonJTDTX.rvt
4/20/2020 10:50:13 AM

EROSION AND SEDIMENTATION CONTROL NOTES:

1. THE PURPOSE OF THE EROSION CONTROL MEASURES SHOWN ON THESE PLANS SHALL BE TO PRECLUDE THE TRANSPORT OF ALL WATERBORNE SEDIMENTS RESULTING FROM CONSTRUCTION ACTIVITIES FROM ENTERING ONTO ADJACENT PROPERTIES OR STATE WATERS. IF FIELD INSPECTION REVEALS THE INADEQUACY OF THE PLAN TO CONFINE SEDIMENT TO THE PROJECT SITE, APPROPRIATE MODIFICATIONS WILL BE MADE BY THE CONTRACTOR TO CORRECT ANY PLAN DEFICIENCIES.

2. ALL EROSION AND SEDIMENT CONTROL MEASURES SHALL BE INSTALLED AND MAINTAINED IN ACCORDANCE WITH THE "VIRGINIA EROSION AND SEDIMENT CONTROL HANDBOOK" (VESCH). THE CONTRACTOR SHALL BE THOROUGHLY FAMILIAR WITH ALL APPLICABLE MEASURES CONTAINED THEREIN WHICH MAY BE PERTINENT TO THIS PROJECT. MAINTENANCE WILL INCLUDE THE REPAIR OF MEASURES DAMAGED BY ANY SUBCONTRACTOR INCLUDING THOSE OF THE PUBLIC UTILITY COMPANIES.

3. SILT FENCE INTENDED TO TRAP SEDIMENT ON-SITE MUST BE CONSTRUCTED AS A FIRST STEP IN GRADING AND BE MADE FUNCTIONAL BEFORE UPSLOPE LAND DISTURBANCE TAKES PLACE.

4. SEDIMENT CONTROL MEASURES MAY REQUIRE MINOR FIELD ADJUSTMENTS AT TIME OF CONSTRUCTION TO ENSURE THEIR INTENDED PURPOSE IS ACCOMPLISHED. OFFICE OF CODE COMPLIANCE APPROVAL WILL BE REQUIRED FOR OTHER DEVIATIONS FROM THE APPROVED PLANS.

5. WHERE THE CONTRACTOR HAS STRIPPED AND STOCKPILED TOPSOIL, SILT FENCE SHALL BE PLACED AT THE TOE OF THE STOCKPILE AFTER STRIPPING OF TOPSOIL IS COMPLETED.

6. PERMANENT OR TEMPORARY SOIL STABILIZATION MUST BE APPLIED TO ALL DENUDED AREAS WITHIN 7 DAYS AFTER FINAL GRADE IS REACHED ON ANY PORTION OF THE SITE. SOIL STABILIZATION MUST ALSO BE APPLIED TO DENUDED AREAS WHICH MAY NOT BE AT FINAL GRADE BUT WILL REMAIN DORMANT (UNDISTURBED) FOR LONGER THAN 30 DAYS. SOIL STABILIZATION MEASURES INCLUDE VEGETATIVE ESTABLISHMENT, MULCHING AND THE EARLY APPLICATION OF GRAVEL BASE MATERIALS.

7. IF DISTURBED AREA STABILIZATION IS TO BE ACCOMPLISHED DURING THE MONTHS OF DECEMBER, JANUARY OR FEBRUARY, STABILIZATION SHALL CONSIST OF MULCHING IN ACCORDANCE WITH VESCH SPECIFICATION 1.75. SEEDING WILL THEN TAKE PLACE AS SOON AS THE SEASON PERMITS.

8. TEMPORARY EROSION CONTROL MEASURES ARE NOT TO BE REMOVED UNTIL ALL DISTURBED AREAS ARE STABILIZED. AFTER STABILIZATION IS COMPLETE, ALL MEASURES SHALL BE REMOVED WITHIN 30 DAYS. TRAPPED SEDIMENT SHALL BE SPREAD AND SEEDED.

9. TOPSOIL SHALL BE REMOVED AND STOCKPILED SEPARATE FROM OTHER SOIL. WHEN CONSTRUCTION IS COMPLETED, THE TOPSOIL SHALL BE RESTORED TO ITS PREVIOUS LOCATION AND CONDITIONS TO THE GREATEST EXTENT PRACTICAL. IN AREAS WHERE TOPSOIL RESTORATION IS NOT POSSIBLE, POST-CONSTRUCTION TOPSOIL CONDITIONS SHALL BE REESTABLISHED TO PRE-CONSTRUCTION CONDITIONS UTILIZING SOIL AMENDMENTS AS APPROVED BY THE OWNER.

CONSTRUCTION OF A SILT FENCE (WITHOUT WIRE SUPPORT)

SF

1. SET THE STAKES.

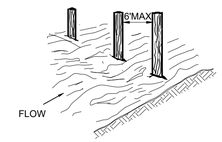

2. EXCAVATE A 4"x4" TRENCH UPSLOPE ALONG THE LINE OF STAKES

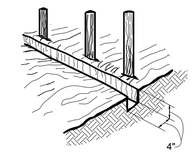

3. STAPLE FILTER MATERIAL TO STAKES AND EXTEND IT INTO THE TRENCH.

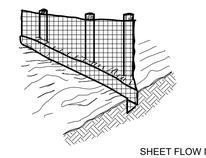

4. BACKFILL AND COMPACT THE EXCAVATED SOIL.

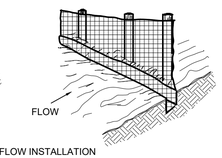

SHEET FLOW INSTALLATION
(PERSPECTIVE VIEW)

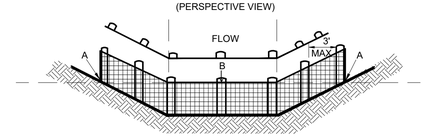

POINTS A SHOULD BE HIGHER THAN POINT B.
DRAINAGEWAY INSTALLATION
(FRONT ELEVATION)

SEEDING SPECIFICATIONS

TABLE 3.31-B
(REVISED JUNE 2003)
TEMPORARY SEEDING SPECIFICATIONS
QUICK REFERENCE FOR ALL REGIONS

SEED		
APPLICATION DATES	SPECIES	APPLICATION RATES
SEPT. 1 - FEB. 15	50/50 MIX OF ANNUAL RYEGRASS (LOLIUM MULTI-FLORUM & CEREAL (WINTER) RYE (SECALE CEREALE)	50-100 (LBS./ACRE)
FEB. 16-APR. 30	ANNUAL RYEGRASS (LOLIUM MULTI-FLORUM)	60-100 (LBS./ACRE)
MAY. 1-AUG. 31	GERMAN MILLET	50 (LBS./ACRE)

FERTILIZER & LIME

- APPLY 10-10-10 FERTILIZER AT A RATE OF 450 LBS./ACRE (OR 10 LBS./1,000 SQ. FT.)
- APPLY PULVERIZED AGRICULTURAL LIMESTONE AT A RATE OF 2 TONS/ACRE (OR 90 LBS./1,000 SQ. FT.)

NOTE:
1. A SOIL TEST IS NECESSARY TO DETERMINE THE ACTUAL AMOUNT OF LIME REQUIRED TO ADJUST THE SOIL PH OF SITE.
2. INCORPORATE THE LIME AND FERTILIZER INTO THE TOP 4-6 INCHES OF THE SOIL BY DISKING OR BY OTHER MEANS.
3. WHEN APPLYING SLOWLY AVAILABLE NITROGEN, USE RATES AVAILABLE IN EROSION & SEDIMENT CONTROL TECHNICAL BULLETIN #4 2003 NUTRIENT MANAGEMENT FOR DEVELOPMENT SITES AT http://www.dcr.state.va.us/sw/e&s.htm#pubs

REV	ISSUED FOR	DATE	BY

PROJECT ENGINEER:	J. PETERY
DESIGNED BY:	J. PETERY
DRAWN BY:	A. DARNELL
CHECKED BY:	J. NEWBOLD
IF THIS BAR DOES NOT MEASURE 1" THEN DRAWING IS NOT TO FULL SCALE	0 1/2" 1"

PERMIT SET
DO NOT USE FOR CONSTRUCTION

COMMONWEALTH OF VIRGINIA
JOEL K. PETERY
Lic. No.036763
04-21-2020
PROFESSIONAL ENGINEER

Hazen
HAZEN AND SAWYER
1555 ROSENEATH ROAD
RICHMOND, VIRGINIA 23230

FREDERICK-WINCHESTER SERVICE AUTHORITY
WINCHESTER, VIRGINIA

OPEQUON WATER RECLAMATION FACILITY
FOG FACILITY UPGRADES

CIVIL

EROSION AND SEDIMENT CONTROL
NOTES AND DETAILS

DATE:	APRIL 2020
HAZEN NO.:	31439-003
CONTRACT NO.:	202008
DRAWING NUMBER:	CD1

File: O:\31439-RIC\31439-003\ENGINEERING\DRAWINGS\CIVIL\CD1 Saved by ADARNELL Save date: 4/7/2020 9:31 AM
PLOT DATE: 4/17/2020 2:29 PM BY: JLUZON

CITY OF WINCHESTER, VA
DEPARTMENT OF PUBLIC UTILITIES

TYPICAL RESILIENT SEAT VALVE INSTALLATION:

VALVE BOX AND BOOT SHALL BE CAST IRON
VALVE BOX COVER SHALL BE MARKED "WATER"
VALVE TOP SHALL BE FLUSH WITH FINISHED GRADE
18" X 18" CONCRETE PAD SHALL BE PLACED AROUND VALVE BOXES LOCATED OUTSIDE OF PAVEMENT AREAS
VALVE BOX SHALL BE SCREW TYPE FOR ADJUSTMENT

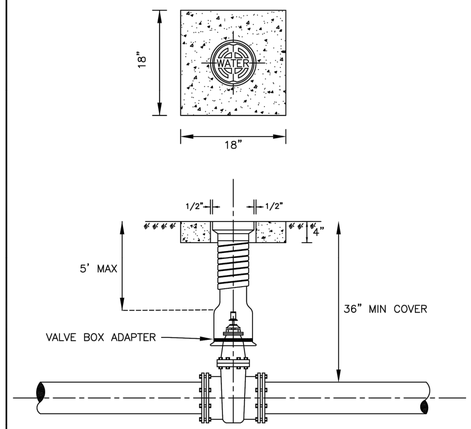

MECHANICAL JOINT FITTINGS AND PIPE RESTRAINED BY USING MEGA-LUG RESTRAINING FLANGES

STANDARD DETAIL NO. WD- 8	TYPICAL VALVE & BOX INSTALLATION SCALE: NONE	DATE: 10/2017

CITY OF WINCHESTER, VA
DEPARTMENT OF PUBLIC UTILITIES

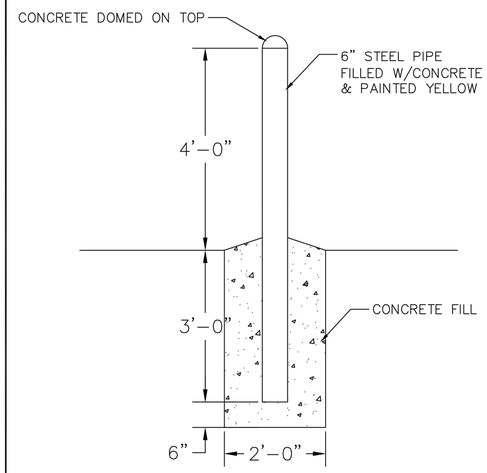

BOLLARD TYPE III

NO SCALE

STANDARD DETAIL NO. SW-5	BOLLARD TYPE III SCALE: NONE	DATE: 10/2017

CITY OF WINCHESTER, VA
DEPARTMENT OF PUBLIC UTILITIES

* WHERE THE TRENCH BOTTOM IS ROCK, IT SHALL BE EXCAVATED TO A MINIMUM OF 8" BELOW THE BOTTOM OF THE PIPE AND BACKFILLED WITH BEDDING MATERIAL FREE OF ROOTS, DEBRIS & STONES
* WHERE SUBGRADE IS UNSTABLE, PIPE SHALL BE BEDDED ON A MINIMUM OF 8" BEDDING MATERIAL
* BACKFILL TO BE PLACED IN 12" LIFTS AND COMPACTED TO 90% OF MAXIMUM DRY DENSITY

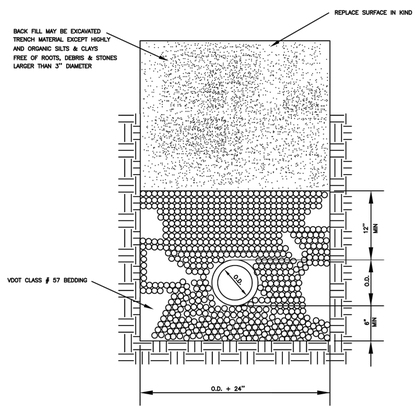

STANDARD DETAIL NO. WS - 1	STANDARD BEDDING DETAIL OUTSIDE TRAFFIC AREAS (PVC OR DIP) SCALE: NONE	DATE: 10/2017

CITY OF WINCHESTER, VA
DEPARTMENT OF PUBLIC UTILITIES

* WHERE THE TRENCH BOTTOM IS ROCK, IT SHALL BE EXCAVATED TO A MINIMUM OF 8" BELOW THE BOTTOM OF THE PIPE AND BACKFILLED WITH BEDDING MATERIAL FREE OF ROOTS, DEBRIS & STONES
* WHERE SUBGRADE IS UNSTABLE, PIPE SHALL BE BEDDED ON A MINIMUM OF 8" BEDDING MATERIAL

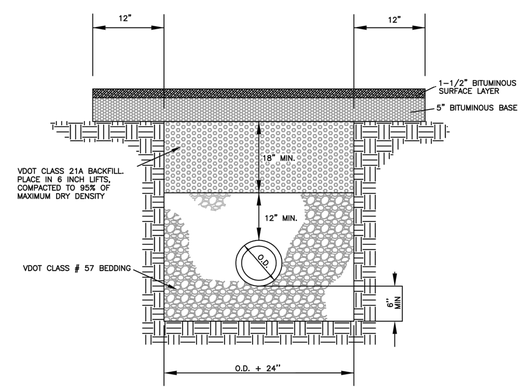

STANDARD DETAIL NO. WS - 2	STANDARD BEDDING DETAIL WITHIN TRAFFIC AREAS (PVC OR DIP) SCALE: NONE	DATE: 10/2017

File: O:\31439-RIC\31439-003\ENGINEERING\DRAWINGS\CIVIL\CD2 Saved by ADARNELL Save date: 4/7/2020 9:30 AM
PLOT DATE: 4/17/2020 2:29 PM BY: JLUZON

REV	ISSUED FOR	DATE	BY

PROJECT ENGINEER:	J. PETERY
DESIGNED BY:	J. PETERY
DRAWN BY:	A. DARNELL
CHECKED BY:	J. NEWBOLD
IF THIS BAR DOES NOT MEASURE 1" THEN DRAWING IS NOT TO FULL SCALE	0 1/2" 1"

PERMIT SET
DO NOT USE FOR CONSTRUCTION

COMMONWEALTH OF VIRGINIA
JOEL K. PETERY
Lic. No.036763
04-21-2020
PROFESSIONAL ENGINEER

Hazen
HAZEN AND SAWYER
1555 ROSENEATH ROAD
RICHMOND, VIRGINIA 23230

FREDERICK-WINCHESTER SERVICE AUTHORITY
WINCHESTER, VIRGINIA

OPEQUON WATER RECLAMATION FACILITY
FOG FACILITY UPGRADES

CIVIL

CITY STANDARD DETAILS

DATE:	APRIL 2020
HAZEN NO.:	31439-003
CONTRACT NO.:	202008
DRAWING NUMBER:	CD2

NOTES:

1. SAVI BEAST MODEL VFA-1200DM, INFLUENT AND EFFLUENT PUMPS, PIPING, APPURTENANCES AND CONTROL PANELS ARE FURNISHED BY OWNER. SEE SECTION 46 21 76 FOR EQUIPMENT INSTALLATION. AND APPENDIX A FOR SCOPE OF SUPPLY. ADDITIONAL PIPING, VALVES APPURTENANCES AND EQUIPMENT ARE REQUIRED AND SHALL BE PROVIDED BY THE CONTRACTOR TO CONSTRUCT A FUNCTIONALLY COMPLETE PROJECT.
2. SEE SECTIONS 03 45 15 FOR PRE-CAST CONCRETE BUILDING REQUIREMENTS

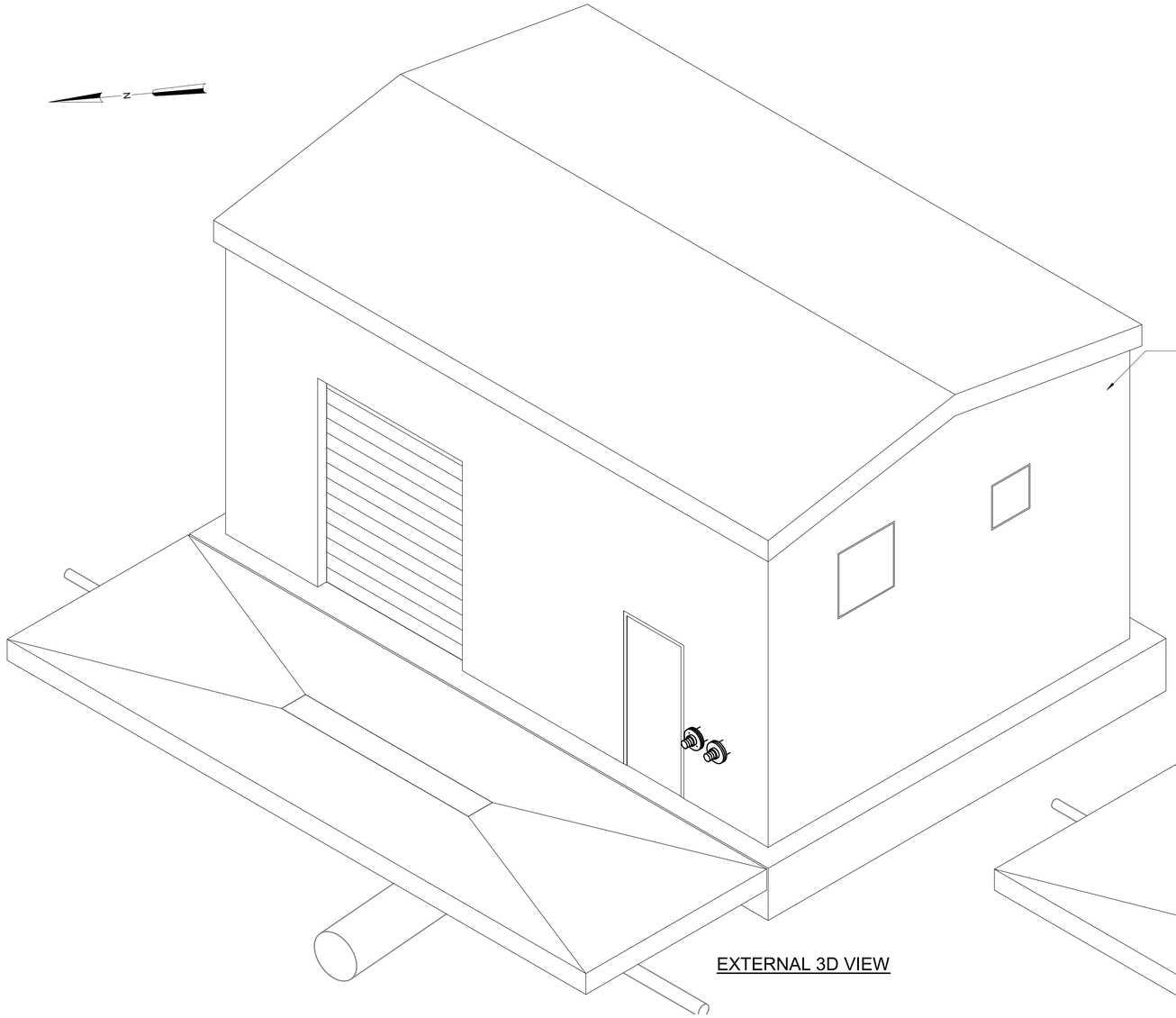

EXTERNAL 3D VIEW

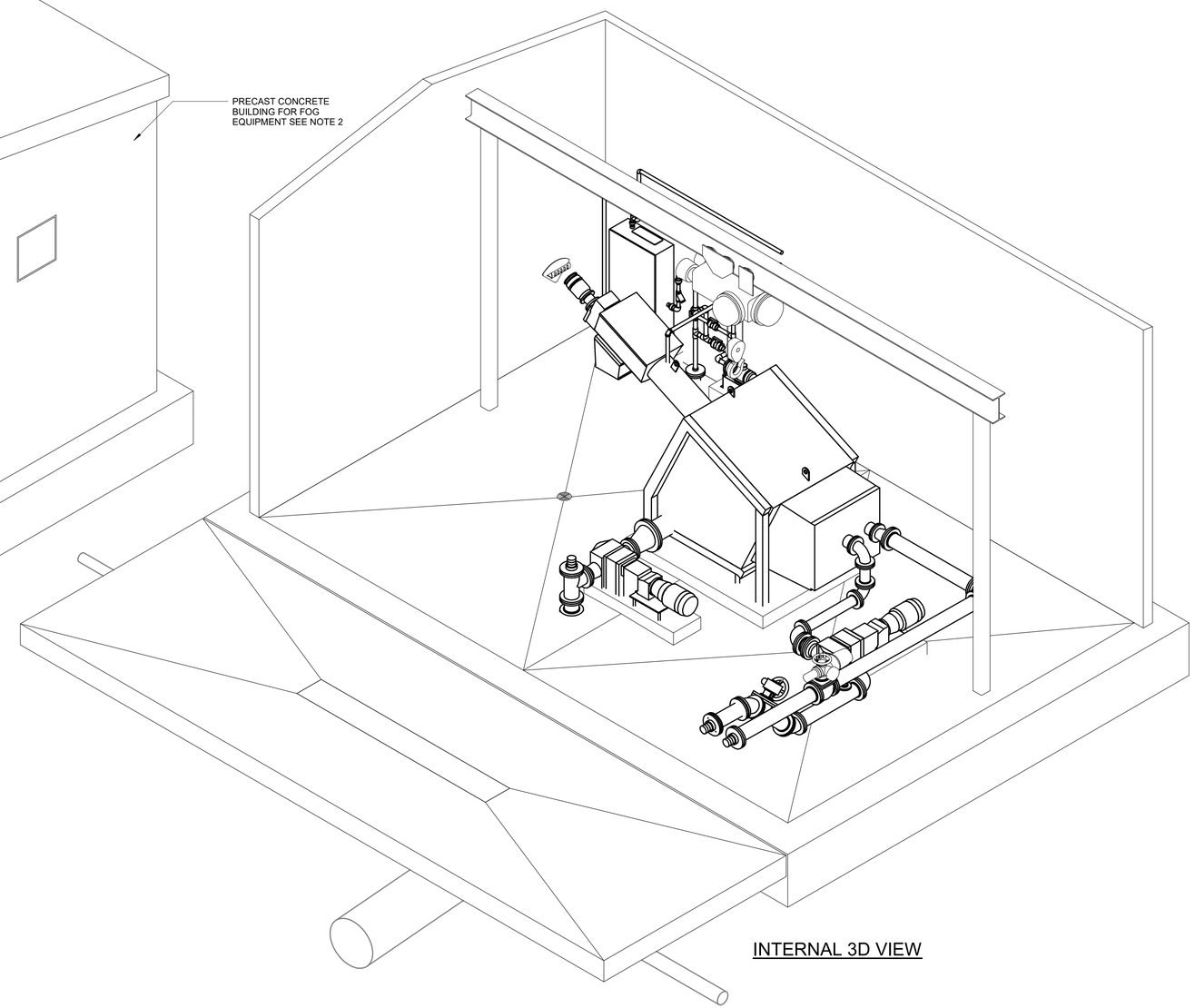

INTERNAL 3D VIEW

REV	ISSUED FOR	DATE	BY

PROJECT ENGINEER:	J. PETERY
DESIGNED BY:	B. PINTO
DRAWN BY:	D. CARR
CHECKED BY:	J. NEWBOLD
IF THIS BAR DOES NOT MEASURE 1" THEN DRAWING IS NOT TO FULL SCALE	0 1/2" 1"

PERMIT SET
DO NOT USE FOR CONSTRUCTION

COMMONWEALTH OF VIRGINIA
JOEL K. PETERY
Lic. No.036763
04-21-2020
PROFESSIONAL ENGINEER

Hazen

HAZEN AND SAWYER
1555 ROSENEATH ROAD
RICHMOND, VIRGINIA 23230

FREDERICK-WINCHESTER SERVICE AUTHORITY
WINCHESTER, VIRGINIA

OPEQUON WATER RECLAMATION FACILITY
FOG FACILITY UPGRADES

FOG RECEIVING STATION NO. 2
MECHANICAL
3D VIEW

DATE:	APRIL 2020
HAZEN NO.:	31439-003
CONTRACT NO.:	202008
DRAWING NUMBER:	M101

C:\Users\jlizon\Documents\31439-003-100-SS-MECH_jlizonJTDTX.rvt
4/20/2020 10:50:14 AM

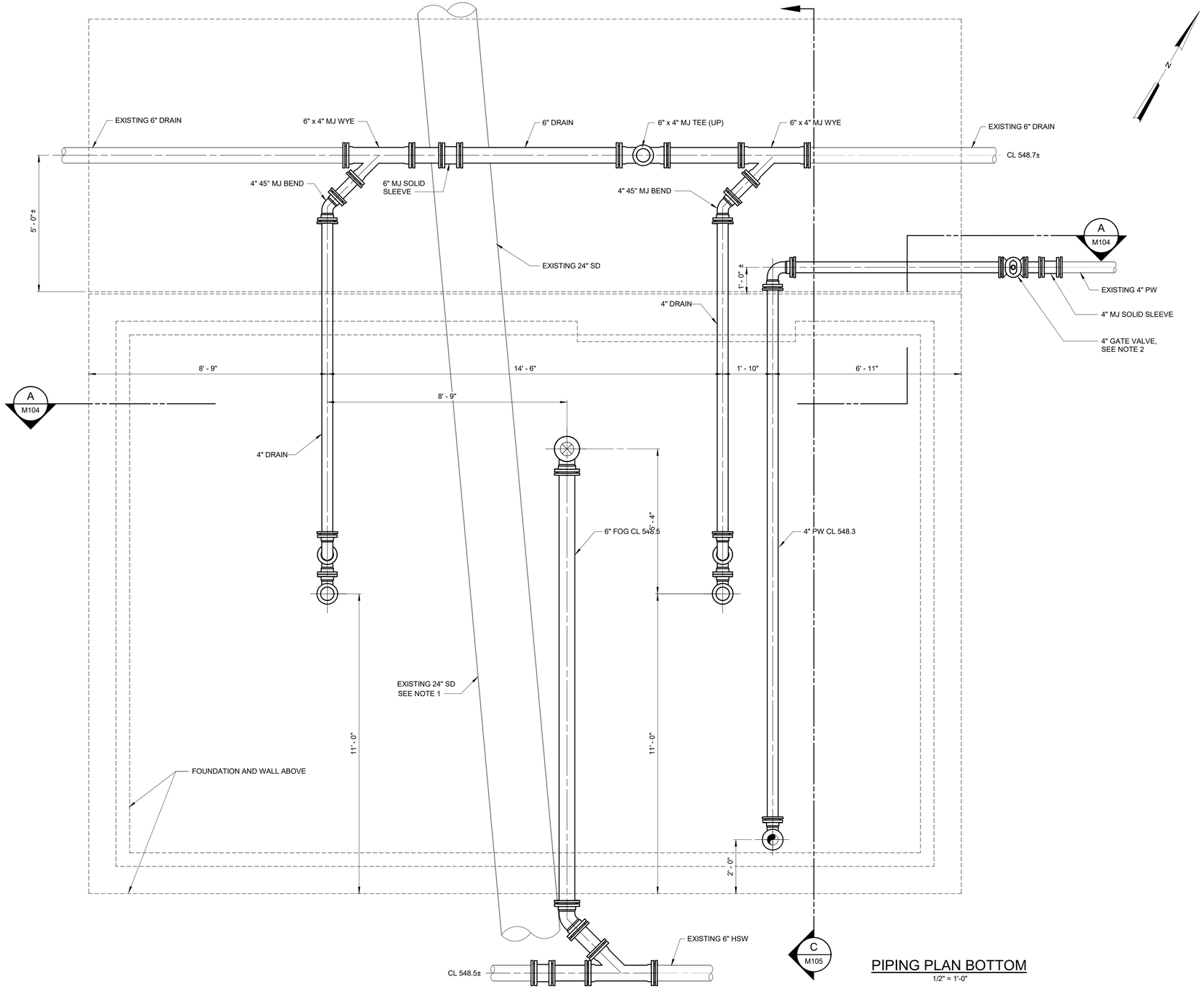

PIPING PLAN BOTTOM

1/2" = 1'-0"

NOTES:

1. ALL PIPING BELOW FOUNDATION SHALL BE ENCASED IN CONCRETE, REFER TO STANDARD DETAIL S-03-0404 - PIPE ENCASEMENTS. CONCRETE PIPE ENCASEMENT SHALL CONTINUE 5 FEET BEYOND FOUNDATION, UNLESS NOTED OTHERWISE.
2. CONCRETE PIPE ENCASEMENT SHALL BE TERMINATED ADJACENT TO 4" GATE VALVE, SEE STANDARD DETAIL WD-8 FOR VALVE AND BOX ADAPTER.

REV	ISSUED FOR	DATE	BY

PROJECT ENGINEER:	J. PETERY
DESIGNED BY:	J. PETERY
DRAWN BY:	E. PAGSANJAN
CHECKED BY:	G. ROGERS
IF THIS BAR DOES NOT MEASURE 1" THEN DRAWING IS NOT TO FULL SCALE	0 1/2" 1"

PERMIT SET
DO NOT USE FOR CONSTRUCTION

COMMONWEALTH OF VIRGINIA
JOEL K. PETERY
Lic. No.036763
04-21-2020
PROFESSIONAL ENGINEER

Hazen

HAZEN AND SAWYER
1555 ROSENEATH ROAD
RICHMOND, VIRGINIA 23230

FREDERICK-WINCHESTER SERVICE AUTHORITY
WINCHESTER, VIRGINIA

OPEQUON WATER RECLAMATION FACILITY
FOG FACILITY UPGRADES

FOG RECEIVING STATION NO. 2
MECHANICAL
BOTTOM PIPING PLAN

DATE:	APRIL 2020
HAZEN NO.:	31439-003
CONTRACT NO.:	202008
DRAWING NUMBER:	M102

C:\Users\jlucon\Documents\31439-003-100-SS-MECH_jlucon.rtDT7X.rvt
4/20/2020 10:50:16 AM

NOTES:

1. OWNER FURNISHED EQUIPMENT.

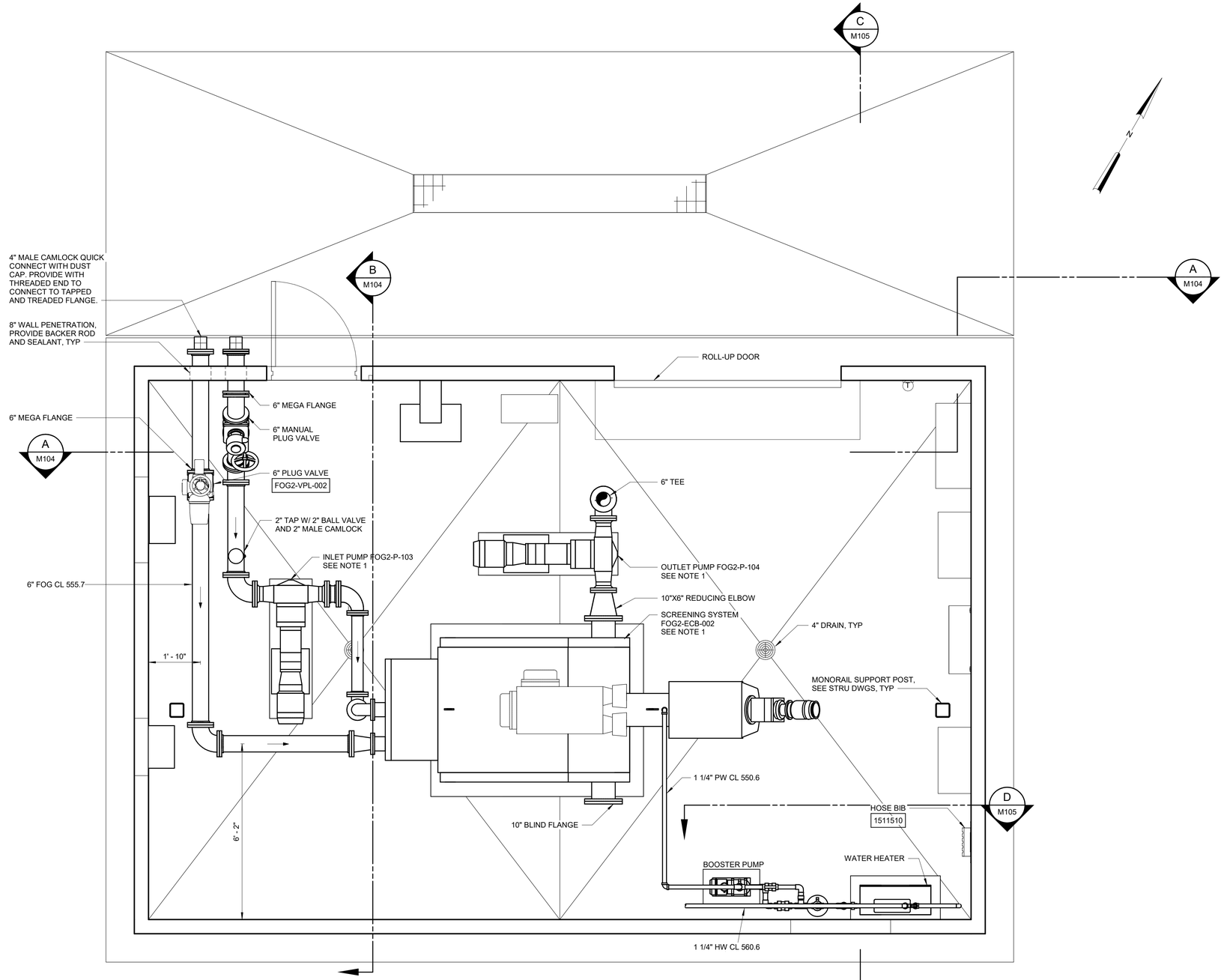

BOTTOM PLAN

1/2" = 1'-0"

REV	ISSUED FOR	DATE	BY

PROJECT ENGINEER:	J. PETERY
DESIGNED BY:	B. PINTO
DRAWN BY:	D. CARR
CHECKED BY:	J. NEWBOLD
IF THIS BAR DOES NOT MEASURE 1" THEN DRAWING IS NOT TO FULL SCALE	0 1/2" 1"

PERMIT SET
DO NOT USE FOR CONSTRUCTION

COMMONWEALTH OF VIRGINIA
JOEL K. PETERY
Lic. No.036763
04-21-2020
PROFESSIONAL ENGINEER

Hazen

HAZEN AND SAWYER
1555 ROSENEATH ROAD
RICHMOND, VIRGINIA 23230

FREDERICK-WINCHESTER SERVICE AUTHORITY
WINCHESTER, VIRGINIA

OPEQUON WATER RECLAMATION FACILITY
FOG FACILITY UPGRADES

FOG RECEIVING STATION NO. 2
MECHANICAL
FLOOR PLAN

DATE:	APRIL 2020
HAZEN NO.:	31439-003
CONTRACT NO.:	202008
DRAWING NUMBER:	M103

C:\Users\epagaanjan\OneDrive - Hazen and Sawyer\Documents\31439-003-100-SS-MECH_epagaanjan.rvt
4/21/2020 9:39:11 AM

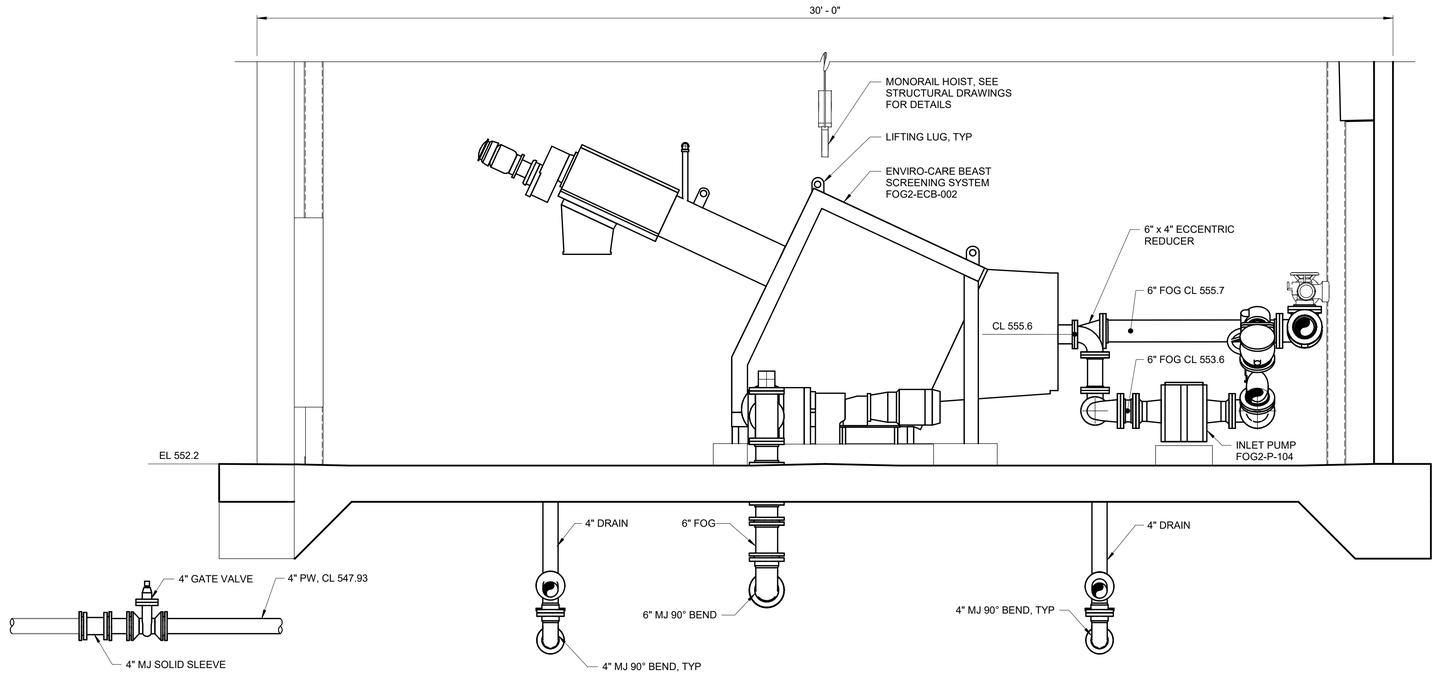

SECTION A M102
1/2" = 1'-0"

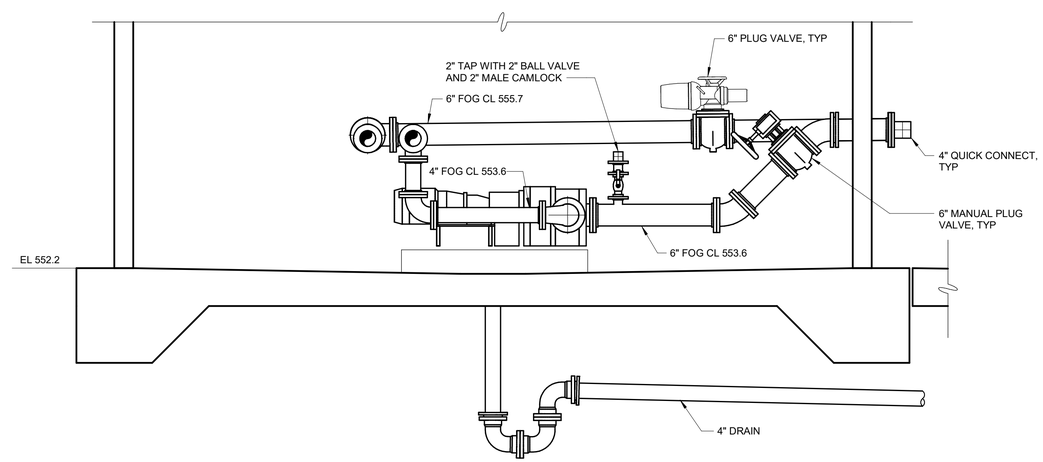

SECTION B M103
1/2" = 1'-0"

REV	ISSUED FOR	DATE	BY

PROJECT ENGINEER:	J. PETERY
DESIGNED BY:	B. PINTO
DRAWN BY:	D. CARR
CHECKED BY:	J. NEWBOLD
IF THIS BAR DOES NOT MEASURE 1" THEN DRAWING IS NOT TO FULL SCALE	0 1/2" 1"

PERMIT SET
DO NOT USE FOR CONSTRUCTION

COMMONWEALTH OF VIRGINIA
JOEL K. PETERY
Lic. No.036763
04-21-2020
PROFESSIONAL ENGINEER

Hazen

HAZEN AND SAWYER
1555 ROSENEATH ROAD
RICHMOND, VIRGINIA 23230

FREDERICK-WINCHESTER SERVICE AUTHORITY
WINCHESTER, VIRGINIA

OPEQUON WATER RECLAMATION FACILITY
FOG FACILITY UPGRADES

FOG RECEIVING STATION NO. 2
MECHANICAL
SECTION VIEWS I

DATE:	APRIL 2020
HAZEN NO.:	31439-003
CONTRACT NO.:	202008
DRAWING NUMBER:	M104

C:\Users\jluzon\Documents\31439-003-100-SS-MECH_jluzonJTDTX.rvt
4/20/2020 10:50:18 AM

NOTES:

1. CONNECT WATER LINE AND HOT WATER TO SOLENOID VALVES PER MANUFACTURER'S SHOP DRAWINGS. CONTRACTOR SHALL FIELD COORDINATE FINAL WATER AND HOT WATER CONNECTIONS.

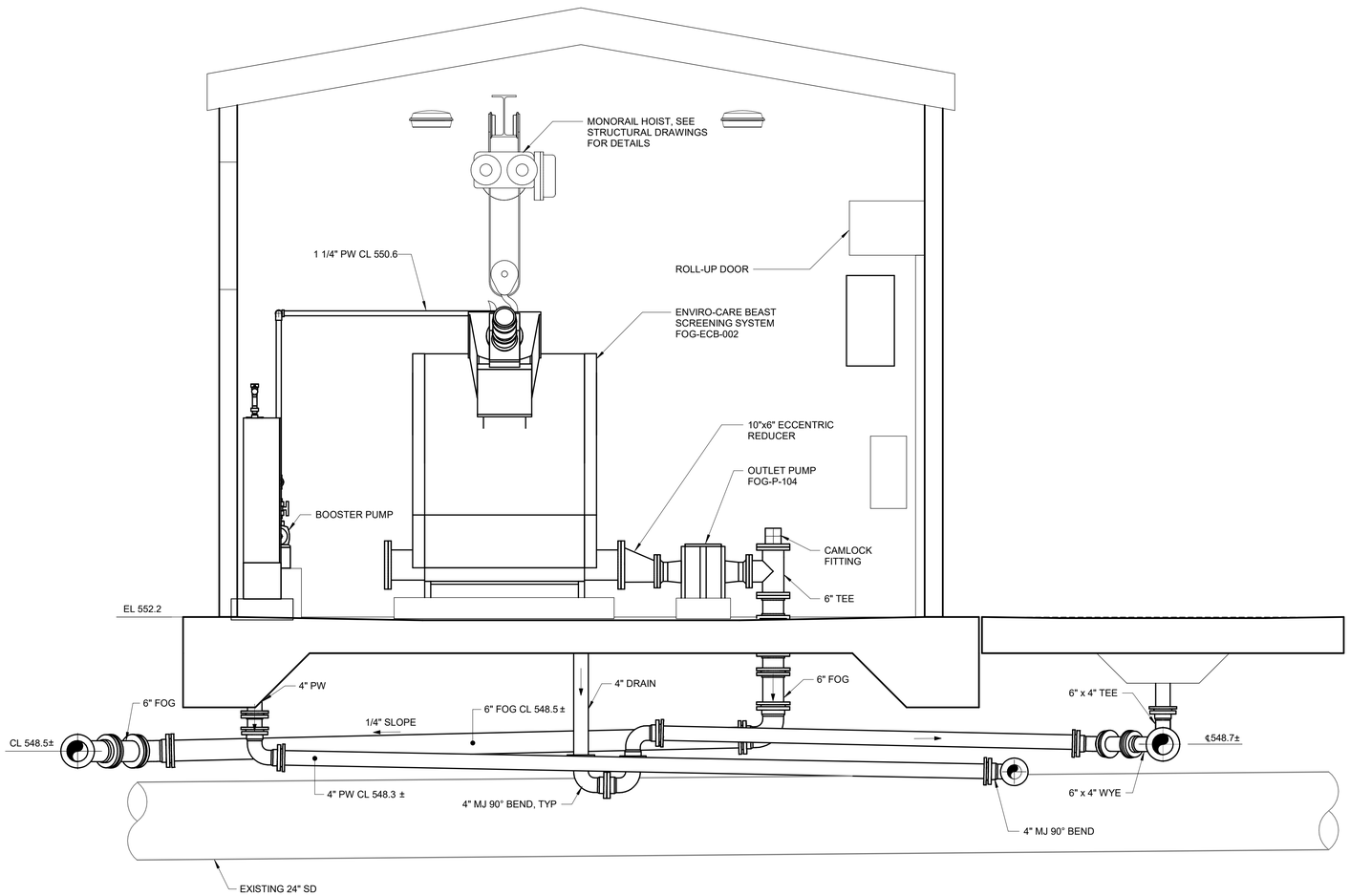

SECTION C M102
1/2" = 1'-0"

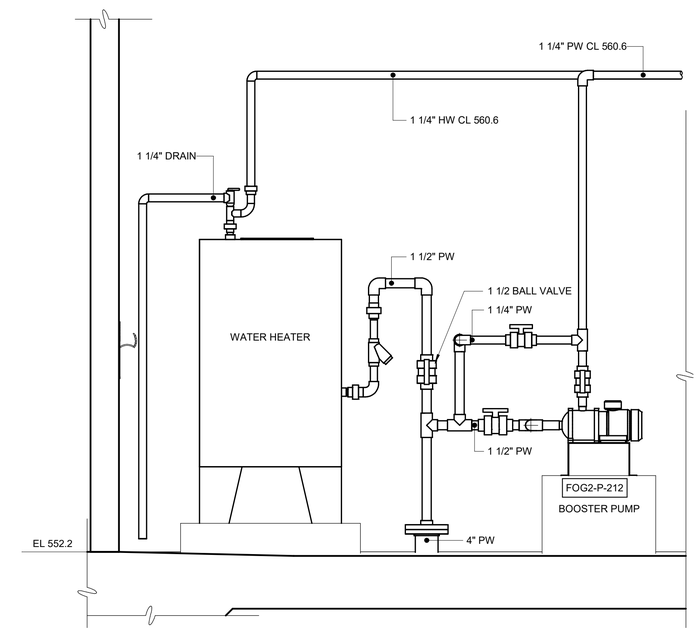

SECTION D M103
3/4" = 1'-0"

REV	ISSUED FOR	DATE	BY

PROJECT ENGINEER:	J. PETERY
DESIGNED BY:	B. PINTO
DRAWN BY:	D. CARR
CHECKED BY:	J. NEWBOLD
IF THIS BAR DOES NOT MEASURE 1" THEN DRAWING IS NOT TO FULL SCALE	0 1/2" 1"

PERMIT SET
DO NOT USE FOR CONSTRUCTION

COMMONWEALTH OF VIRGINIA
JOEL K. PETERY
Lic. No. 036763
04-21-2020
PROFESSIONAL ENGINEER

Hazen

HAZEN AND SAWYER
1555 ROSENEATH ROAD
RICHMOND, VIRGINIA 23230

FREDERICK-WINCHESTER SERVICE AUTHORITY
WINCHESTER, VIRGINIA

OPEQUON WATER RECLAMATION FACILITY
FOG FACILITY UPGRADES

FOG RECEIVING STATION NO. 2
MECHANICAL
SECTION VIEWS II

DATE:	APRIL 2020
HAZEN NO.:	31439-003
CONTRACT NO.:	202008
DRAWING NUMBER:	M105

C:\Users\jlazon\Documents\31439-003-100-SS-MECH_jlazonJTEDTX.rvt
4/20/2020 10:50:19 AM

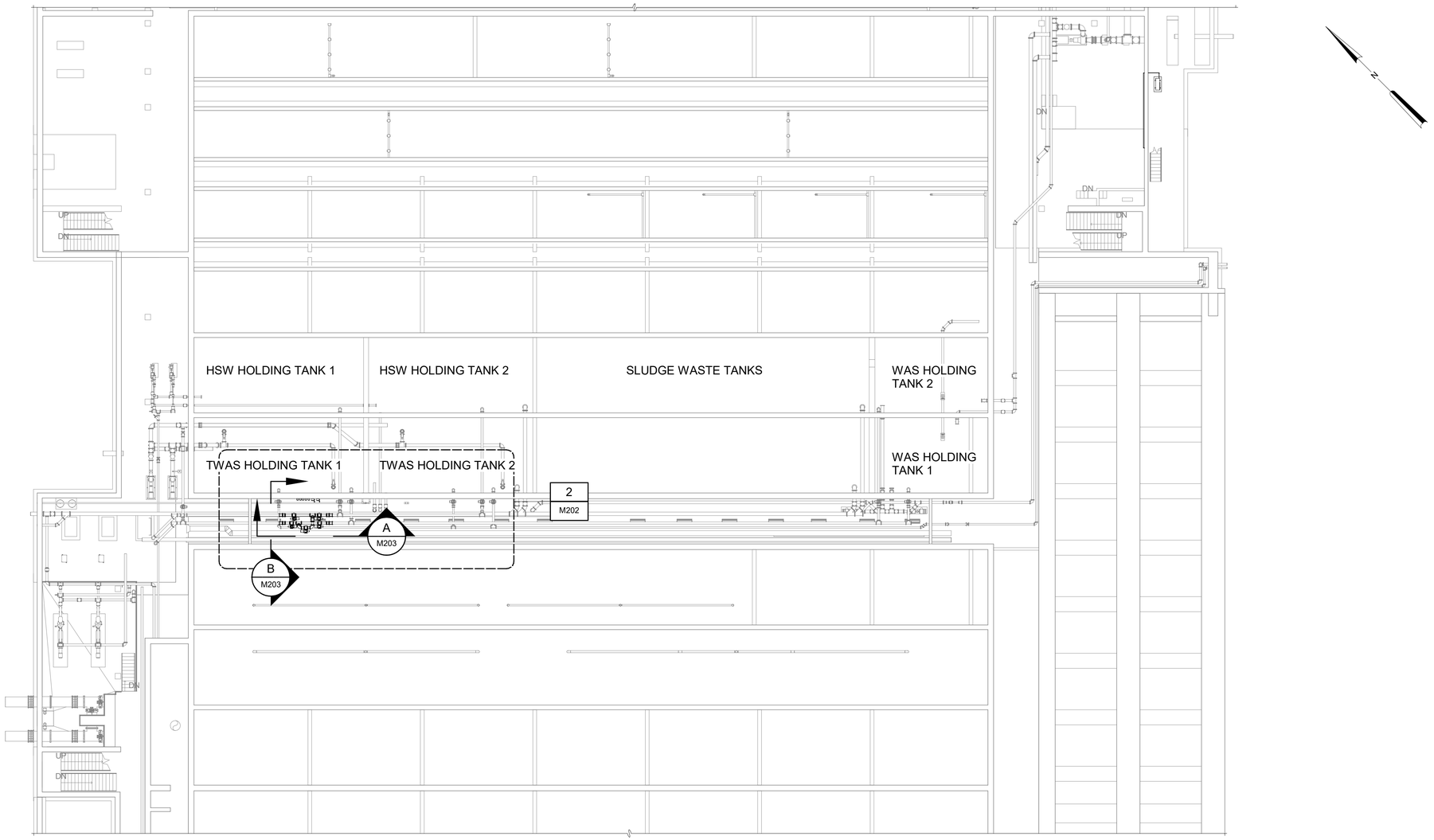

OVERALL PLAN

1/16" = 1'-0"

REV	ISSUED FOR	DATE	BY

PROJECT ENGINEER:	J. PETERY
DESIGNED BY:	B. PINTO
DRAWN BY:	D. CARR
CHECKED BY:	J. NEWBOLD
IF THIS BAR DOES NOT MEASURE 1" THEN DRAWING IS NOT TO FULL SCALE	0 1/2" 1"

PERMIT SET
DO NOT USE FOR CONSTRUCTION

COMMONWEALTH OF VIRGINIA
JOEL K. PETERY
Lic. No.036763
04-21-2020
PROFESSIONAL ENGINEER

Hazen

HAZEN AND SAWYER
1555 ROSENEATH ROAD
RICHMOND, VIRGINIA 23230

FREDERICK-WINCHESTER SERVICE AUTHORITY
WINCHESTER, VIRGINIA

OPEQUON WATER RECLAMATION FACILITY
FOG FACILITY UPGRADES

SLUDGE WASTE HOLDING TANKS
MECHANICAL
PLAN VIEW

DATE:	APRIL 2020
HAZEN NO.:	31439-003
CONTRACT NO.:	202008
DRAWING NUMBER:	M201

C:\Users\jlazon\Documents\31439-003-300-SHTPG-MECH_jlazonJTDTX.rvt
4/17/2020 3:58:38 PM

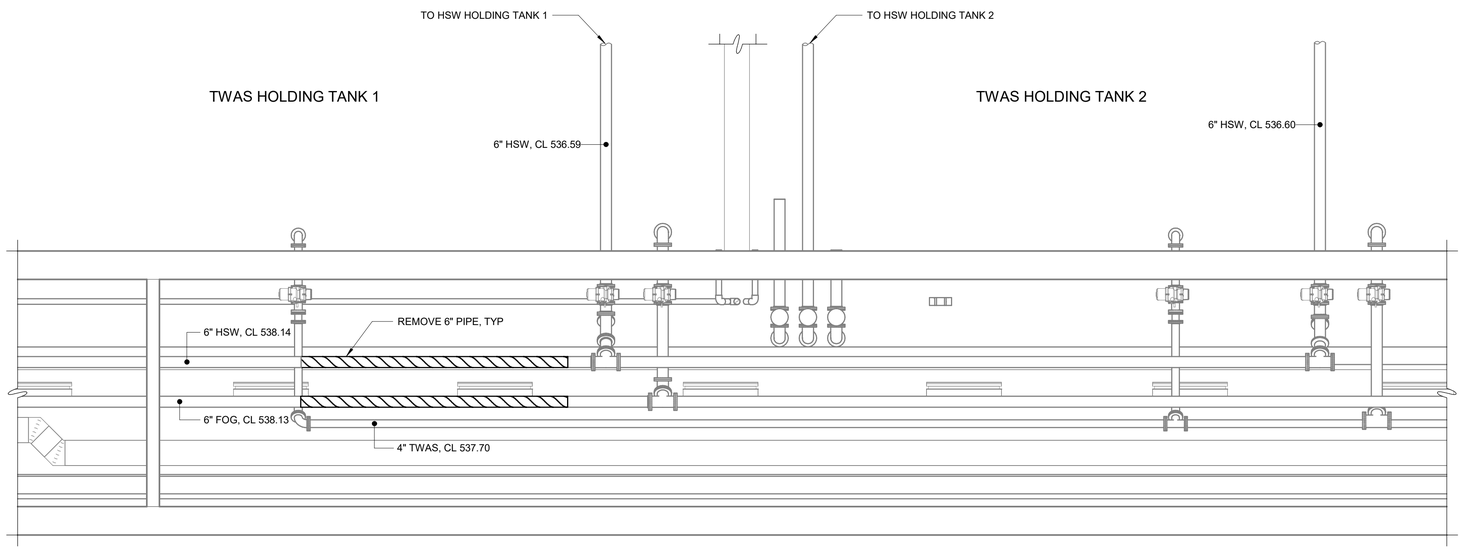

DEMOLITION PLAN

1/4" = 1'-0"

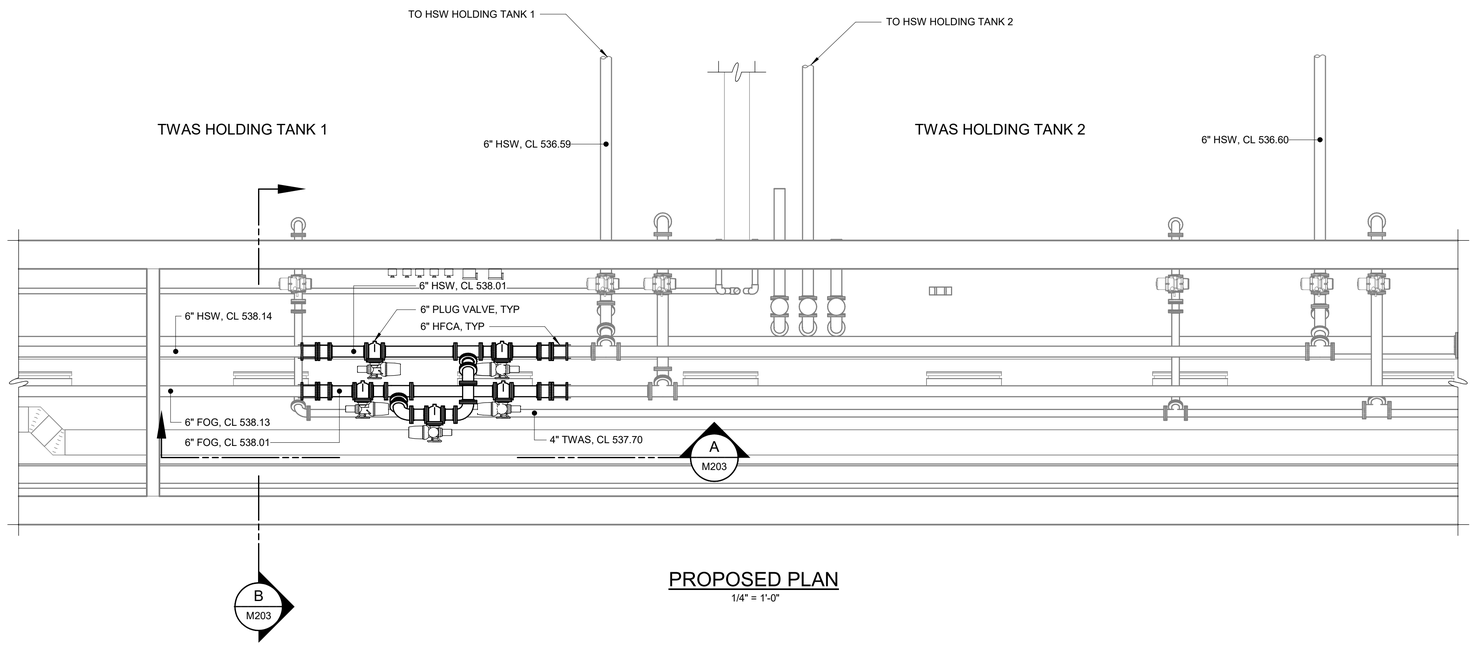

PROPOSED PLAN

1/4" = 1'-0"

REV	ISSUED FOR	DATE	BY

PROJECT ENGINEER:	J. PETERY
DESIGNED BY:	B. PINTO
DRAWN BY:	D. CARR
CHECKED BY:	J. NEWBOLD

IF THIS BAR DOES NOT MEASURE 1" THEN DRAWING IS NOT TO FULL SCALE (0 1/2" 1")

PERMIT SET
DO NOT USE FOR CONSTRUCTION

COMMONWEALTH OF VIRGINIA
JOEL K. PETERY
Lic. No.036763
04-21-2020
PROFESSIONAL ENGINEER

Hazen

HAZEN AND SAWYER
1555 ROSENEATH ROAD
RICHMOND, VIRGINIA 23230

FREDERICK-WINCHESTER SERVICE AUTHORITY
WINCHESTER, VIRGINIA

OPEQUON WATER RECLAMATION FACILITY
FOG FACILITY UPGRADES

SLUDGE WASTE HOLDING TANKS
MECHANICAL
DEMOLITION AND PROPOSED PLAN

DATE:	APRIL 2020
HAZEN NO.:	31439-003
CONTRACT NO.:	202008
DRAWING NUMBER:	M202

C:\Users\jlizzon\Documents\31439-003-300-SHTPFG-MECH_jlizzonJTDTX.rvt
4/17/2020 3:58:39 PM

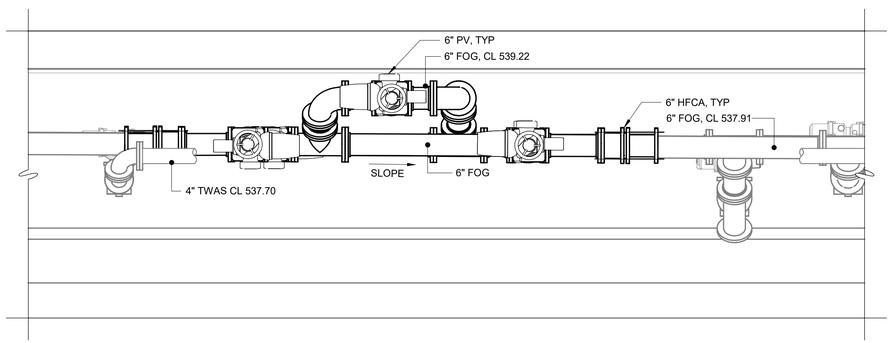

SECTION A
1/2" = 1'-0"
M201

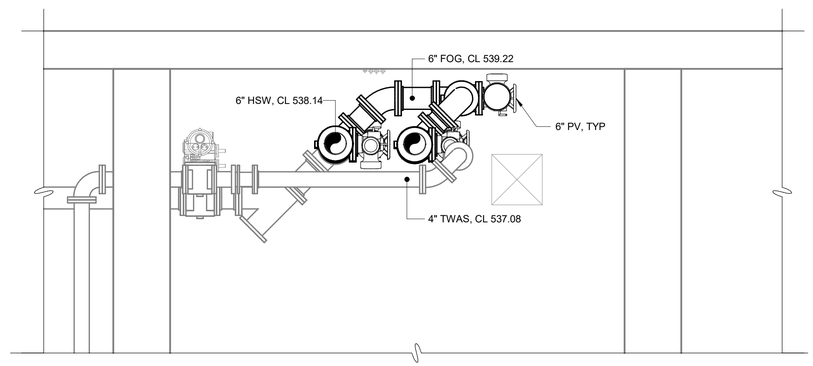

SECTION B
1/2" = 1'-0"
M201

REV	ISSUED FOR	DATE	BY

PROJECT ENGINEER:	J. PETERY
DESIGNED BY:	B. PINTO
DRAWN BY:	D. CARR
CHECKED BY:	J. NEWBOLD
IF THIS BAR DOES NOT MEASURE 1" THEN DRAWING IS NOT TO FULL SCALE	0 1/2" 1"

PERMIT SET
DO NOT USE FOR CONSTRUCTION

COMMONWEALTH OF VIRGINIA
JOEL K. PETERY
Lic. No.036763
04-21-2020
PROFESSIONAL ENGINEER

Hazen

HAZEN AND SAWYER
1555 ROSENEATH ROAD
RICHMOND, VIRGINIA 23230

FREDERICK-WINCHESTER SERVICE AUTHORITY
WINCHESTER, VIRGINIA

OPEQUON WATER RECLAMATION FACILITY
FOG FACILITY UPGRADES

SLUDGE WASTE HOLDING TANKS
MECHANICAL
PROPOSED SECTION

DATE:	APRIL 2020
HAZEN NO.:	31439-003
CONTRACT NO.:	202008
DRAWING NUMBER:	M203

C:\Users\jluzon\Documents\31439-003-300-SHTPG-MECH_jluzonJTD7X.rvt
4/17/2020 3:58:42 PM

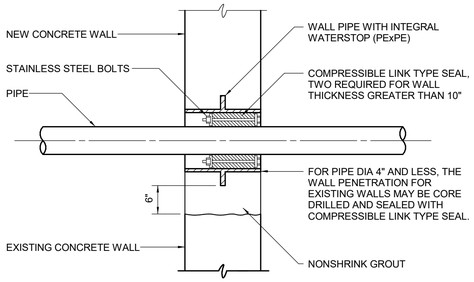

M-40-0111

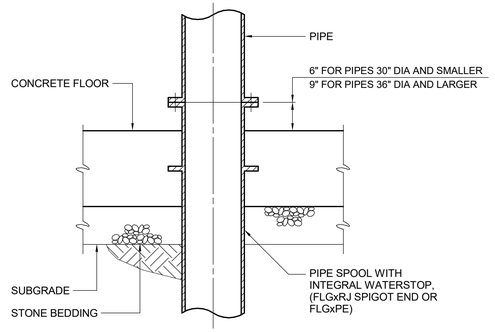

M-40-0113

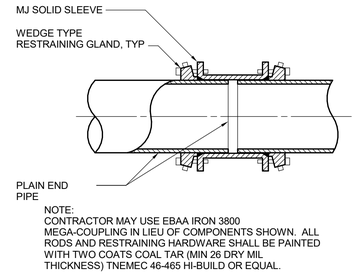

NOTE:
CONTRACTOR MAY USE EBAA IRON 3800 MEGA-COUPLING IN LIEU OF COMPONENTS SHOWN. ALL RODS AND RESTRAINING HARDWARE SHALL BE PAINTED WITH TWO COATS COAL TAR (MIN 26 DRY MIL THICKNESS) TNEMEC 46-465 HI-BUILD OR EQUAL.

RESTRAINED MJ SOLID SLEEVE

M-40-0700

NOTES:

1. CONTRACTOR SHALL DESIGN THE SUPPORT SYSTEMS BASED ON ACTUAL WEIGHTS AND CONDITIONS AS SPECIFIED OR AS SHOWN ON THE CONTRACT DRAWINGS. PIPE HANGERS, SUPPORTS AND BRACKETS SHOWN HERE IN VARIOUS COMBINATIONS REPRESENT MINIMUM REQUIREMENTS FOR ACCEPTABLE SUPPORTS AS TO TYPES, MATERIALS, THICKNESSES, ORIENTATION, AND QUALITY. CONTRACTOR SHALL SUBMIT DESIGN CALCULATIONS AND DETAILS FOR PIPE SUPPORTS SEALED BY A PROFESSIONAL ENGINEER LICENSED BY THE STATE OR COMMONWEALTH WHERE THE PROJECT IS LOCATED WITH ALL PIPE HANGER AND SUPPORT SUBMISSIONS FOR REVIEW BY THE ENGINEER. WHEN SUBMITTING PROPOSED PIPE SUPPORTS AND SUPPORT LOCATIONS, THE CONTRACTOR SHALL USE APPROVED PIPING LAYOUT SUBMITTAL DRAWINGS TO SHOW PROPOSED PIPE SUPPORT TYPE AND LOCATION WITH ACCURATE DIMENSIONS TO DEMONSTRATE THAT SUPPORTS DO NOT EXCEED THE MAXIMUM SPACING REQUIREMENTS OF SECTION 40 05 07. THIS ENSURES THAT SUPPORTS HAVE BEEN COORDINATED WITH ACTUAL PIPE INSTALLATION DRAWINGS. AND THAT SPACING DOES NOT EXCEED MAXIMUM ALLOWABLE SPACING. THE PIPE SUPPORTS SHOWN AND REFERENCED UNDER SCHEDULES A, B & C ARE DESIGNED AND DETAILED FOR GRAVITY LOADING ONLY. RESULTING LATERAL LOADS FROM CONSTRUCTION CONDITIONS, DESIGN SEISMIC EVENT OR OTHER RELATED CONDITIONS SHALL BE APPLIED TO THE PIPE AND OTHER NON-STRUCTURAL COMPONENTS IN ACCORDANCE WITH THE GOVERNING BUILDING CODE. SUPPLEMENTAL LATERAL STIFFNESS, RESISTANCE AND MEMBERS (WHEN NECESSARY) SHALL BE PROVIDED ALONG PIPE OR AT GRAVITY SUPPORTS AND CONNECTIONS WHEN REQUIRED BY CALCULATIONS.
2. TYPICALLY, REINFORCED CONCRETE SUPPORTS SHALL BE USED WHEN PIPE CENTERLINE IS LESS THAN 3-FEET ABOVE CONCRETE FLOOR OR FINISHED GRADE, AND AT A MINIMUM, SHALL CONFORM TO STANDARD DETAIL S-03-0505.
3. MSS REFERS TO THE MANUFACTURERS STANDARDIZATION SOCIETY OF THE VALVE AND FITTINGS INDUSTRY, STANDARD PRACTICE SP-58 AND SP-69.
4. PIPE WALL SUPPORT AND PIPE SUPPORT RACK SHALL BE ASSEMBLED WITH CHANNEL FRAMES AND ACCESSORIES AS MANUFACTURED BY UNISTRUT CORP, OR VERSABAR CORP, OR EQUAL.
5. FABRICATED PIPE SUPPORT MAY BE USED AS SHOWN IN PIPE SUPPORT RACK DETAIL, OR TO SUPPORT PIPE FROM THE FLOOR.
6. BACK PLATES SHALL BE DESIGNED BY THE CONTRACTOR ACCORDING TO WALL TYPES AND THE WEIGHTS INVOLVED. BACK PLATE TO BE SUPPLIED BY BRACKET MANUFACTURER.
7. ALL INSULATED PIPES SHALL USE A SHIELD (MSS TYPE 40) WITH THE APPLICABLE PIPE SUPPORT.
8. MINIMUM OF ONE HANGER PER PIPE SECTION, CLOSE TO JOINT, ON THE BARREL. ALSO AT CHANGE IN DIRECTION AND BRANCH CONNECTIONS.
9. RODS AND SPACING ARE BASED ON STANDARD WEIGHT MATERIALS ACCORDING TO MSS SP-69. AND ARE FOR REFERENCE ONLY. THE CONTRACTOR SHALL SPACE HIS HANGERS BASED ON ACTUAL CONDITIONS.
10. REFER TO THE APPROPRIATE AND RELATED SPECIFICATION SECTIONS AND DRAWINGS OF THE CONTRACT DOCUMENTS REGARDING SUPPLEMENTAL DESIGN REQUIREMENTS RELATING TO PERFORMANCE SUBMISSIONS BY CONTRACTOR. ALL NON-STRUCTURAL COMPONENTS, INCLUDING PIPING, HVAC DUCT, PLUMBING AND ELECTRICAL CONDUIT SUPPORT SYSTEMS SHALL BE ADEQUATELY DESIGNED AND INSTALLED UTILIZING SUFFICIENT CONNECTIONS AND MEMBERS TO ACCOMMODATE AND RESIST THE DESIGN LATERAL FORCES ASSOCIATED WITH A SPECIFIC COMPONENT'S DYNAMIC INERTIA DURING THE DESIGN SEISMIC EVENT. REFER TO THE CODE COMPLIANCE DRAWING FOR STRUCTURAL DESIGN INFORMATION FOR SPECIFIC SEISMIC DESIGN CRITERIA.

SCHEDULE A

BASE ELBOW (TEE) (DIM IN INCHES)

PIPE SIZE	A	B	C	D DIA x LG
3	1 1/2	5	4 7/8	1/2 x 5
4	2	6	5 1/2	5/8 x 5
5-6	2 1/2	7	VARIES	5/8 x 5
8-10	4	9	VARIES	5/8 x 5
12-16	6	11	VARIES	3/4 x 6
18-24	8	13 1/2	VARIES	3/4 x 6
30	10	16	23	7/8 x 7
36	12	19	26	7/8 x 7

SCHEDULE B

ADJUSTABLE SADDLE (DIM IN INCHES)

PIPE SIZE	A	B	C	D DIA x LG
3	2 1/2	7	1 1/2	5/8 x 5
4-12	3	7 1/2	2 1/2	5/8 x 5
14-16	4	9	3	5/8 x 5
18-20	6	11	3 1/2	3/4 x 6
24-48	6	11	4	3/4 x 6

M-40-0380

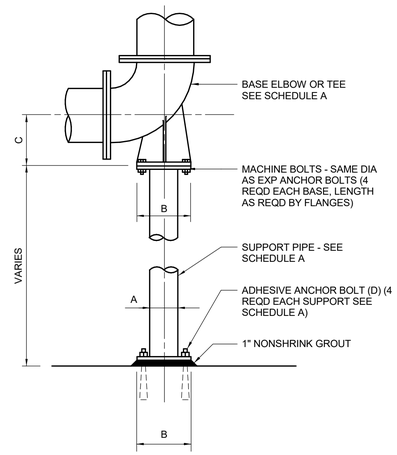

BASE ELBOW (TEE)

M-40-0300

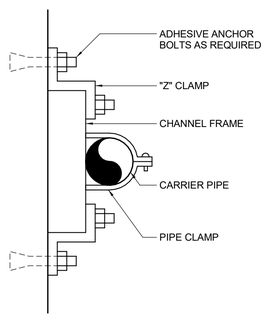

PIPE WALL SUPPORT AND SUPPORT RACK SHALL BE ASSEMBLED W/ CHANNEL FRAMES AND ACCESSORIES AS MANUFACTURED BY UNISTRUT CORP OR EQUAL

PIPE WALL SUPPORT

M-40-0301

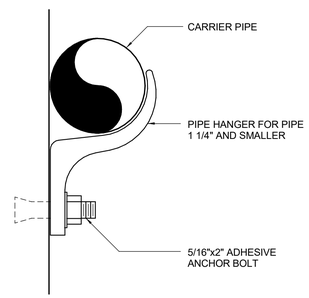

WALL HANGER PIPE SUPPORT

M-40-0302

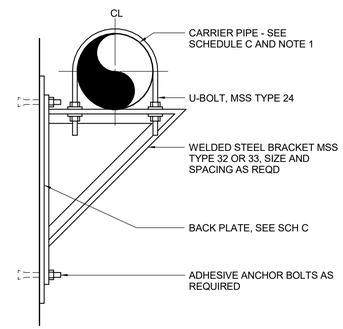

PIPE SUPPORT BRACKET

M-40-0303

SCHEDULE C

SUPPORT RODS AND BRACKET SPACING (FOR STANDARD WEIGHT PIPE)

PIPE SIZE (INCHES)	BACK PLATE (INCHES)	MINIMUM ROD □ (INCHES)		MAX SPAN IN FEET (SEE NOTE 9)			
		PROCESS PIPING	STEEL AIR PIPING	COPPER	PLASTIC	STEEL	DIP (SEE NOTE 8)
UP TO 1	SEE NOTE 6	3/8	3/8	5	5	6	-
1 1/4-2	"	3/8	3/8	8	5	10	-
2 1/2-3 1/2	"	3/8	3/8	8	5	12	6
4-5	"	1/2	3/8	-	5	14	8
6	"	5/8	3/8	-	5	15	9
8-12	"	3/4	1/2	-	5	15	9
14-16	"	7/8	1/2	-	5	15	9
18	"	1	1/2	-	5	18	10
20-24	"	1 1/4	5/8	-	5	18	10

M-40-0381

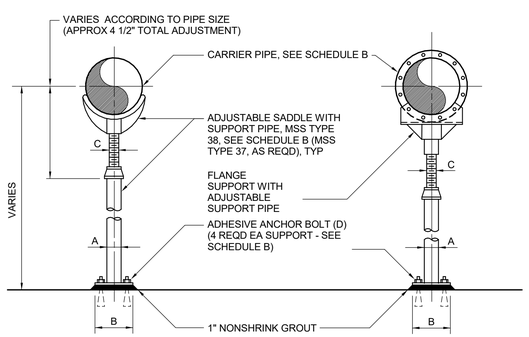

ADJUSTABLE SADDLE FLANGE SUPPORT

M-40-0304

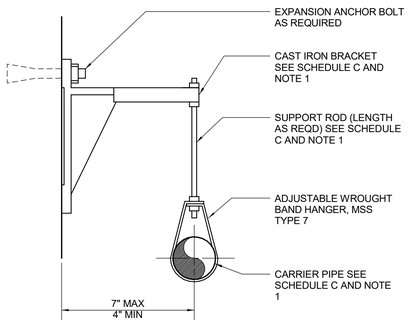

PIPE SUPPORT BRACKET

M-40-0305

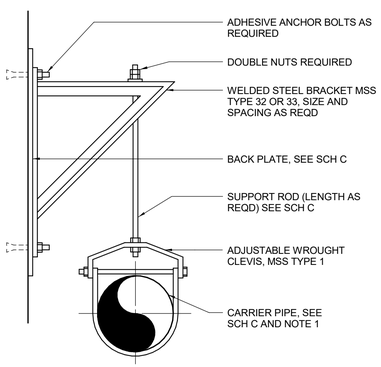

PIPE SUPPORT BRACKET

M-40-0306

REV	ISSUED FOR	DATE	BY

PROJECT ENGINEER:	J. PETERY
DESIGNED BY:	J. PETERY
DRAWN BY:	E. PAGSANJAN
CHECKED BY:	J. NEWBOLD
IF THIS BAR DOES NOT MEASURE 1" THEN DRAWING IS NOT TO FULL SCALE	0 1/2" 1"

PERMIT SET
DO NOT USE FOR CONSTRUCTION

COMMONWEALTH OF VIRGINIA
JOEL K. PETERY
Lic. No. 036763
04-21-2020
PROFESSIONAL ENGINEER

Hazen

HAZEN AND SAWYER
1555 ROSENEATH ROAD
RICHMOND, VIRGINIA 23230

FREDERICK-WINCHESTER SERVICE AUTHORITY
WINCHESTER, VIRGINIA

OPEQUON WATER RECLAMATION FACILITY
FOG FACILITY UPGRADES

FOG RECEIVING STATION NO. 2
MECHANICAL
DETAILS

DATE:	APRIL 2020
HAZEN NO.:	31439-003
CONTRACT NO.:	202008
DRAWING NUMBER:	MD1

C:\Users\jluzon\Documents\31439-003-100-SS-MECH_jluzonJTDTX.rvt
4/20/2020 10:50:20 AM

GENERAL STRUCTURAL NOTES

G-1 THESE NOTES ARE GENERAL AND SUPPLEMENT THE SPECIFICATIONS. THESE NOTES APPLY TO THE ENTIRE PROJECT UNLESS MODIFIED OR NOTED OTHERWISE IN THE CONTRACT DOCUMENTS.

G-2 STANDARD DETAILS SHALL BE USED WHEN REFERRED TO OR WHEN NO MORE RESTRICTIVE OR DIFFERENT DETAILS ARE SHOWN ON THE DRAWINGS.

G-3 DESIGN IS IN ACCORDANCE WITH AND CONSTRUCTION SHALL COMPLY WITH THE PROVISIONS OF THE VIRGINA UNIFORM STATEWIDE BUILDING CODE. THE DESIGN LOADS AND OTHER DESIGN VALUES GIVEN IN NOTES G-4 THROUGH G-6 WERE USED FOR DESIGN OF STRUCTURES UNLESS NOTED OTHERWISE ON THE DRAWINGS.

G-4 SNOW LOAD:

GROUND SNOW LOAD (Pg) = 35 PSF
FLAT-ROOF SNOW LOAD (Pf) =21 PSF
SNOW EXPOSURE FACTOR (Ce) = 1.0
SNOW LOAD IMPORTANCE FACTOR (Is) = 1.1
THERMAL FACTOR (Ct) = 1.1

G-5 WIND DESIGN CRITERIA:

ULTIMATE DESIGN WIND SPEED (Vult) = 120 MPH
NOMINAL DESIGN WIND SPEED (Vasd) = 90 MPH
RISK CATEGORY = III
WIND IMPORTANCE FACTOR (Iw) = 1.0
WIND EXPOSURE = C

G-6 SEISMIC LOAD:

RISK CATEGORY = III
SEISMIC IMPORTANCE FACTOR (Ie) = 1.25
SITE CLASS = B
MAPPED SPECTRAL RESPONSE ACCELERATIONS (Ss/S1) = 0.131/0.054
SPECTRAL RESPONSE ACCELERATIONS (SMS/SM1) = 0.131/0.054
SPECTRAL RESPONSE COEFFICIENTS (SDS/SD1) = 0.087/0.036
SEISMIC DESIGN CATEGORY = A

G-7 ALL DIMENSIONS INDICATED FOR EXISTING STRUCTURES SHALL BE VERIFIED BY FIELD MEASUREMENT. ALL DIMENSIONS THAT ARE CONTROLLED BY OR RELATED TO EQUIPMENT SHALL BE VERIFIED BY THE CONTRACTOR WITH THE MANUFACTURER SHOP DRAWINGS PRIOR TO CONSTRUCTION.

G-8 EQUIPMENT ANCHOR SIZES, TYPES, EMBEDMENT AND PATTERNS SHALL BE VERIFIED WITH THE MANUFACTURER. ALL ANCHOR PATTERNS SHALL BE TEMPLATE TO ENSURE ACCURACY OF PLACEMENT.

G-9 STRUCTURAL DRAWINGS SHALL BE USED IN COORDINATION WITH THE DRAWINGS OF ALL OTHER DISCIPLINES AND MANUFACTURER'S SHOP DRAWINGS.

G-10 STRUCTURES HAVE BEEN DESIGNED FOR OPERATIONAL LOADS ON THE COMPLETED STRUCTURE. DURING CONSTRUCTION, THE STRUCTURES SHALL BE PROTECTED BY BRACING AND TEMPORARY SUPPORTS WHEREVER EXCESSIVE CONSTRUCTION LOADS MAY OCCUR. OVERSTRESSING OF ANY STRUCTURAL ELEMENT IS PROHIBITED.

G-11 IF CONTRACTOR DESIRES TO TEMPORARILY PLACE OR MOVE LOADS ON OR ADJACENT TO EXISTING STRUCTURES OR UTILITIES DURING CONSTRUCTION PROCESS, CONTRACTOR IS EXCLUSIVELY RESPONSIBLE FOR MAINTAINING STRUCTURAL INTEGRITY AND AVOIDING OVERSTRESSING AND DAMAGING EXISTING STRUCTURES AND UTILITIES. CONTRACTOR SHALL SUBMIT STRUCTURAL CALCULATIONS AND DRAWINGS VERIFYING PROPOSED CONSTRUCTION INCLUDING APPLICATION OF TEMPORARY CONSTRUCTION LOADS WILL NOT OVERSTRESS OR DAMAGE EXISTING STRUCTURES AND UTILITIES. DRAWINGS AND CALCULATIONS SHALL BE SEALED BY A PROFESSIONAL ENGINEER CURRENTLY REGISTERED IN THE COMMONWEALTH OF VIRGINIA.

G-12 NO BACKFILL SHALL BE PLACED AGAINST ANY SUBSTRUCTURE WALLS UNLESS ALL ADJACENT SUPPORTING ELEMENTS HAVE ACHIEVED DESIGN STRENGTH, OR WALLS HAVE BEEN PROPERLY BRACED, AND IN ANY CASE NOT SOONER THAN 28 DAYS AFTER THE PLACING OF CONCRETE UNLESS APPROVED BY THE ENGINEER. SUPPORTING ELEMENTS SHALL INCLUDE ADJACENT WALLS, SLABS, BEAMS AND COLUMNS.

NONSTRUCTURAL COMPONENT ANCHORAGE

A-1 ALL ARCHITECTURAL, MECHANICAL, AND ELECTRICAL COMPONENTS SHALL BE DESIGNED AND INSTALLED TO RESIST THE CONTROLLING CONDITION OF OPERATIONAL FORCES OR SEISMIC FORCES IN ACCORDANCE WITH THE GOVERNING BUILDING CODE. SEISMIC FORCES SHALL ALSO BE AS PER ASCE 7. COMPONENT SEISMIC ATTACHMENTS SHALL BE BOLTED, WELDED, OR OTHERWISE POSITIVELY FASTENED WITHOUT CONSIDERATION OF FRICTIONAL RESISTANCE PRODUCED BY THE EFFECTS OF GRAVITY. A CONTINUOUS. LOAD PATH OF SUFFICIENT STRENGTH AND STIFFNESS BETWEEN THE COMPONENT AND THE SUPPORTING STRUCTURE SHALL BE PROVIDED. CONNECTIONS FOR BOTH ORTHOGONAL DIRECTIONS (TRANSVERSE AND LONGITUDINAL) SHALL BE DESIGNED BY THE CONTRACTOR'S ENGINEER CURRENTLY REGISTERED IN THE COMMONWEALTH OF VIRGINIA.

A-2 COMPONENT REACTION FORCES AT THE POINT OF ATTACHMENT TO THE STRUCTURE SHALL BE SUBMITTED TO AND COORDINATED WITH THE ENGINEER FOR CONFIRMATION SUPPORTING STRUCTURE CAN WITHSTAND REACTION FORCES.

A-3 CONTRACTORE SHALL PROVIDE SPECIAL SEISMIC CERTIFICATION (SSC) FROM MANUFACTURER OR EQUIPMENT FOR ALL SYSTEMS DEEMED NECESSARY BY SPECIFICATIONS. SPECIAL SEISMIC CERTIFICATION SHALL BE IN COMPLIANCE WITH ASCE 7.

STRUCTURAL METALS

M-1 DETAIL, FABRICATE, AND ERECT STRUCTURAL STEEL IN ACCORDANCE WITH AISC SPECIFICATION FOR STRUCTURAL STEEL BUILDINGS, ALLOWABLE STRESS DESIGN AND PLASTIC DESIGN, LATEST EDITION.

M-2 STEEL MATERIAL:

A. STRUCTURAL HSS:	ASTM A500, GRADE C (46/50 KSI) OR A1085 (50 KSI)
B. STRUCTURAL PIPE:	ASTM A53, GRADE B (35 KSI)
C. PLATES, BARS AND ANGLES:	ASTM A36 UNO (36 KSI)
D. STRUCTURAL W SHAPES:	ASTM A992 (50 KSI)
E. STRUCTURAL S, M, C & MC SHAPES:	ASTM A36 (36 KSI)
F. STRUCTURAL HP	ASTM A572 GRADE 50 (50 KSI)
G. RODS	ASTM F1554 GRADE 36 (36 KSI)

M-3 PROVIDE MINIMUM 3/4" DIAMETER ASTM A325 HIGH STRENGTH BOLTS WITH SNUG TIGHTENED TYPE N CONNECTIONS FOR STRUCTURAL STEEL UNLESS NOTED OTHERWISE. HOLES FOR BOLTS SHALL BE STANDARD SIZE UNLESS NOTED OTHERWISE.

M-4 PROVIDE TYPICAL STEEL BEAM CONNECTIONS FOR A CAPACITY OF NOT LESS THAN THE TOTAL UNIFORM LOAD CAPACITY TABULATED IN THE AISC TABLES FOR ALLOWABLE LOADS OF BEAMS UNLESS NOTED OTHERWISE.

M-5 DO NOT PAINT STEEL SURFACES WHICH ARE TO BE WELDED OR ARE TO BE ENCASED IN CONCRETE.

M-6 ALL STAINLESS STEEL FABRICATIONS EXPOSED TO UNDERWATER SERVICE SHALL BE TYPE 316. ALL OTHER STAINLESS STEEL FABRICATIONS SHALL BE TYPE 304 UNLESS NOTED OTHERWISE.

M-7 ALUMINUM SHALL BE ALLOY 6061-T6 UNLESS NOTED OTHERWISE.

M-8 ALL BOLTS, ANCHORS, AND CONCRETE ANCHORS CONNECTING ALUMINUM SHALL BE STAINLESS STEEL TYPE 316 FOR UNDERWATER APPLICATIONS AND TYPE 304 FOR ALL OTHER APPLICATIONS.

M-9 DETAIL, FABRICATE, AND ERECT ALUMINUM IN ACCORDANCE WITH THE LATEST EDITION OF THE ALUMINUM ASSOCIATION ALUMINUM DESIGN MANUAL.

M-10 ALUMINUM SHALL BE ISOLATED FROM CONTACT WITH CONCRETE AND DISSIMILAR METALS.

M-11 ALL GROOVE AND BUTT WELDS SHALL BE FULL PENETRATION.

M-12 FILLET WELD SIZES SHALL NOT BE LESS THAN THE MINIMUM SIZE REQUIRED BY AISC CODE FOR PLATE SIZES TO BE CONNECTED AND SHALL BE APPLIED TO THE ENTIRE JOINT CONTACT LENGTH, AND NOT LESS THAN 3/16".

M-13 BOTTOM SURFACES OF BASE PLATES SHALL BE GROUTED TO ENSURE FULL BEARING CONTACT WITH CONCRETE SLAB.

M-14 WHENEVER ONE MEMBER IS FASTENED TO ANOTHER WITH FASTENINGS (BOLTS, WELDS, ETC.) SET AT A UNIFORM SPACING, THERE SHALL BE A MINIMUM OF TWO FASTENINGS PER PIECE CONNECTED AND THE FIRST AND LAST FASTENINGS SHALL BE LOCATED NOT TO EXCEED 0.25 OF FASTENER SPACING FROM EACH END.

M-15 BOLTED CONNECTIONS FOR STRUCTURAL STEEL SHALL BE ASSEMBLED AND INSPECTED IN ACCORDANCE WITH RCSC (SPECIFICATIONS FOR STRUCTURAL JOINTS USING ASTM A325 OR ASTM A490 BOLTS).

M-16 STRUCTURAL WELDED JOINTS SHALL CONFORM TO THE PROVISIONS OF AWS D1.1, STRUCTURAL WELDING CODE BY AMERICAN WELDING SOCIETY. PROOF OF WELDER CERTIFICATION SHALL BE AVAILABLE AT THE JOB SITE DURING TIMES OF INSPECTION.

FOUNDATIONS

F-1 CONCRETE (CAST-IN-PLACE) NOTES APPLY TO FOUNDATIONS.

F-2 ALLOWABLE SOIL BEARING PRESSURE

STRUCTURE \ PARAMETER	ALLOWABLE SOIL BEARING PRESSURE
FOG RECIEVING STATION NO. 2	2000 PSF

F-3 MINIMUM DEPTH FROM ADJACENT FINISHED GRADE TO BOTTOM OF FOUNDATION = 30 INCHES.

PRECAST CONCRETE

PC-1 PRECAST STRUCTURES SHALL BE DESIGNED BY A PROFESSIONAL ENGINEER REGISTERED IN THE COMMONWEALTH OF VIRGINIA. PRECAST STRUCTURAL SHOP DRAWINGS SHALL INDICATE DESIGN IS IN COMPLIANCE WITH THE VIRGINIA UNIFORM STATEWIDE BUILDING CODE.

CONCRETE (CAST-IN-PLACE)

C-1 DESIGN OF CONCRETE ELEMENTS INCLUDING WALLS, FORMED SLABS, BEAMS, AND COLUMNS IS IN ACCORDANCE WITH ACI 318 (CODE REQUIREMENTS FOR STRUCTURAL CONCRETE) AND 350 (CODE REQUIREMENTS FOR ENVIRONMENTAL ENGINEERING CONCRETE STRUCTURES).

C-2 FOR CONCRETE MIX DESIGN SEE SPECIFICATION SECTION 03 30 00.

C-3 CONCRETE STRENGTH CLASSES (28-DAY COMPRESSIVE STRENGTH):

A. CLASS A1 CONCRETE (4,500 PSI): NORMAL WEIGHT STRUCTURAL CONCRETE TO BE USED IN ALL STRUCTURES QUALIFYING AS ENVIRONMENTAL CONCRETE STRUCTURES THAT ARE DESIGNED IN ACCORDANCE WITH ACI 350 INCLUDING PUMP STATIONS, TANKS, BASINS, PROCESS STRUCTURES, AND ANY STRUCTURES CONTAINING FLUID OR PROCESS CHEMICALS OR OTHER MATERIALS USED IN TREATMENT PROCESS.

B. CLASS A2 CONCRETE (4,000 PSI): NORMAL WEIGHT STRUCTURAL CONCRETE IN ALL STRUCTURES OTHER THAN STRUCTURES QUALIFYING AS ENVIRONMENTAL CONCRETE STRUCTURES AS DESCRIBED ABOVE, AND FOR ALL SIDEWALKS, CURB AND GUTTERS, AND PAVEMENT.

C. CLASS B CONCRETE (3,000 PSI): NORMAL WEIGHT STRUCTURAL CONCRETE USED FOR DUCT BANK ENCASEMENTS, CATCH BASINS, FENCE AND GUARD POST EMBEDMENT, CONCRETE FILL, AND OTHER AREAS WHERE SPECIFICALLY NOTED ON CONTRACT DRAWINGS.

C-4 ALL BAR REINFORCING SHALL CONFORM TO ASTM A615, GRADE 60. WHERE REINFORCEMENT IS TO BE WELDED IN ACCORDANCE WITH AWS D1.4, ASTM A706 GRADE 60 SHALL BE USED. WELDED WIRE FABRIC SHALL CONFORM TO ASTM A185.

C-5 CONCRETE COVER FOR REINFORCING (UNLESS NOTED OTHERWISE ON THE DRAWINGS):

A. CONCRETE DEPOSITED DIRECTLY AGAINST SOIL:	3"
B. CONCRETE EXPOSED TO WEATHER (#5 OR SMALLER):	1 1/2"
CONCRETE EXPOSED TO WEATHER (#6 OR LARGER):	2"
C. SLABS:	1 1/2"
AT SURFACES CONTACTING FLUID:	2"
D. BEAMS AND COLUMNS (TO MAIN REINFORCEMENT):	2"
BEAMS AND COLUMNS (TO COLUMN TIES OR STIRRUPS):	1 1/2"
E. WALLS 12" OR MORE:	2"
WALLS LESS THAN 12" (#5 OR SMALLER):	1 1/2"
WALLS LESS THAN 12" (#6 OR LARGER):	2"
F. FOR SURFACES EXPOSED TO FLUID IN BEAMS, COLUMNS AND WALLS:	ADD 1/2" TO ABOVE VALUES

C-6 SPLICES SHALL BE CLASS "B" CONFORMING TO THE PROVISIONS OF ACI 318 UNLESS NOTED OTHERWISE. SPLICE LENGTH FOR TWO DIFFERENT SIZED BARS TO BE LAP SPLICED TOGETHER SHALL BE THE LENGTH OF THE LARGER BAR UNLESS NOTED OTHERWISE.

C-7 CONSTRUCTION JOINTS SHALL BE LOCATED AS SHOWN ON THE DRAWINGS. CONSTRUCTION JOINTS NOT SHOWN SHALL BE SUBMITTED BY THE CONTRACTOR FOR THE APPROVAL OF THE ENGINEER PRIOR TO SUBMITTING REBAR SHOP DRAWINGS. VERTICAL CONSTRUCTION JOINTS IN WALLS AND HORIZONTAL JOINTS IN SLABS SHALL BE PROVIDED AT A SPACING NOT GREATER THAN 45 FEET ON CENTER. FOR EXPOSED WALLS WITH FLUID OR EARTH ON THE OPPOSITE SIDE, THE SPACING BETWEEN VERTICAL AND HORIZONTAL JOINTS SHALL BE A MAXIMUM OF 25 FEET.

C-8 WHERE HORIZONTAL CONSTRUCTION JOINTS, LOCATED ABOVE THE FOUNDATION SLAB, EXTEND BEYOND WHERE NEEDED, THEY SHALL BE TERMINATED AT A VERTICAL CONSTRUCTION JOINT APPROVED BY THE ENGINEER.

C-9 ALL JOINTS WHICH ARE IN MEMBERS IN CONTACT WITH LIQUID OR BELOW GRADE SHALL HAVE A WATERSTOP. CONSTRUCTION JOINTS SHALL HAVE A 6" PVC RIBBED WATERSTOP. EXPANSION JOINTS SHALL HAVE A 9" PVC CENTER BULB RIBBED WATERSTOP. IN VERTICAL JOINTS, WATERSTOPS SHALL TERMINATE NO LESS THAN 18" ABOVE THE MAXIMUM WATER SURFACE OR 18" ABOVE GRADE, WHICHEVER IS HIGHER.

C-10 ALL EXPOSED CORNERS SHALL HAVE A 3/4" CHAMFER.

C-11 EQUIPMENT SUPPORTS, ANCHORAGES, OPENINGS, RECESSES AND REVEALS NOT SHOWN ON THE STRUCTURAL DRAWINGS BUT REQUIRED BY OTHER CONTRACT DOCUMENTS, SHALL BE PROVIDED FOR PRIOR TO PLACING CONCRETE.

C-12 REINFORCING BARS AND ACCESSORIES SHALL NOT BE IN CONTACT WITH ANY METAL PIPE, PIPE FLANGE, METAL CONDUIT, OR OTHER METAL PARTS EMBEDDED IN CONCRETE. A MINIMUM CLEARANCE OF 2" SHALL BE PROVIDED.

C-13 DOWELS, ANCHOR BOLTS, PIPES, WATERSTOPS AND OTHER EMBEDDED ITEMS SHALL BE HELD SECURELY IN POSITION WHILE CONCRETE IS BEING PLACED.

C-14 CONDUITS AND OTHER SIMILAR ITEMS EMBEDDED IN OR PENETRATING THROUGH CONCRETE SHALL BE SPACED ON CENTER NOT LESS THAN 3 TIMES THEIR OUTSIDE DIMENSION, BUT NOT LESS THAN 2 1/2" CLEAR. WHEN SUCH ITEMS ARE EMBEDDED IN WALLS OR SLABS, THEY SHALL NOT OCCUPY MORE THAN 1/3 OF THE MEMBER THICKNESS.

C-15 AT ALL TYPICAL CURBS, EQUIPMENT PADS, AND PIPE SUPPORT PIERS, REINFORCING DOWELS SHOWN MAY BE REPLACED WITH MATCHING DOWELS SET IN EPOXY IN DRILLED HOLES AS SPECIFIED. DOWELS LOCATED CLOSER THAN 3" FROM ANY EDGE OF CONCRETE SHALL NOT BE REPLACED WITH DRILLED DOWELS.

C-16 DRILLED ADHESIVE DOWELS (WHERE DOWELS ARE SHOWN TO BE PLACED INTO HARDENED CONCRETE):

A. THE HOLE DIAMETER SHALL BE NO LARGER THAN 1/8" GREATER THAN THE DIAMETER OF THE REINFORCING BAR AT THE DEFORMATIONS.
B. THE DEPTH OF EMBEDMENT SHALL BE 12 BAR DIAMETERS, UNLESS NOTED OTHERWISE.
C. ADJUST THE DOWEL LOCATIONS AS NEEDED TO AVOID DRILLING THROUGH ANY REINFORCING BARS. IF THE LOCATION NEEDS TO BE MODIFIED, CONTACT THE ENGINEER. CONTRACTOR SHALL USE NON-DESTRUCTIVE MEANS TO FIELD LOCATE REINFORCEMENT PRIOR TO DRILLING HOLES FOR DOWELS.

C-17 CLEAR DISTANCE FROM ANCHOR BOLTS TO ANY CONCRETE EDGE SHALL BE 4" MINIMUM UNLESS NOTED OTHERWISE.

C-18 CONCRETE COMPRESSIVE STRENGTH TESTS SHALL BE AVAILABLE ON THE JOB SITE FOR REVIEW BY THE ENGINEER.

REV	ISSUED FOR	DATE	BY

PROJECT ENGINEER:	J. PETERY
DESIGNED BY:	C. OHRNBERGER
DRAWN BY:	J. LUZON
CHECKED BY:	C. PHILLIPS
IF THIS BAR DOES NOT MEASURE 1" THEN DRAWING IS NOT TO FULL SCALE	0 1/2" 1"

PERMIT SET
DO NOT USE FOR CONSTRUCTION

COMMONWEALTH OF VIRGINIA
CHRISTOPHER T. PHILLIPS
Lic. No.033796
04-21-2020
PROFESSIONAL ENGINEER

Hazen
HAZEN AND SAWYER
1555 ROSENEATH ROAD
RICHMOND, VIRGINIA 23230

FREDERICK-WINCHESTER SERVICE AUTHORITY
WINCHESTER, VIRGINIA

OPEQUON WATER RECLAMATION FACILITY
FOG FACILITY UPGRADES

STRUCTURAL
GENERAL STRUCTURAL NOTES

DATE:	APRIL 2020
HAZEN NO.:	31439-003
CONTRACT NO.:	202008
DRAWING NUMBER:	S1

C:\Users\jluzon\Documents\31439-003-100-SS-STRU_JluzonJTDTX.rvt
4/17/2020 2:19:28 PM

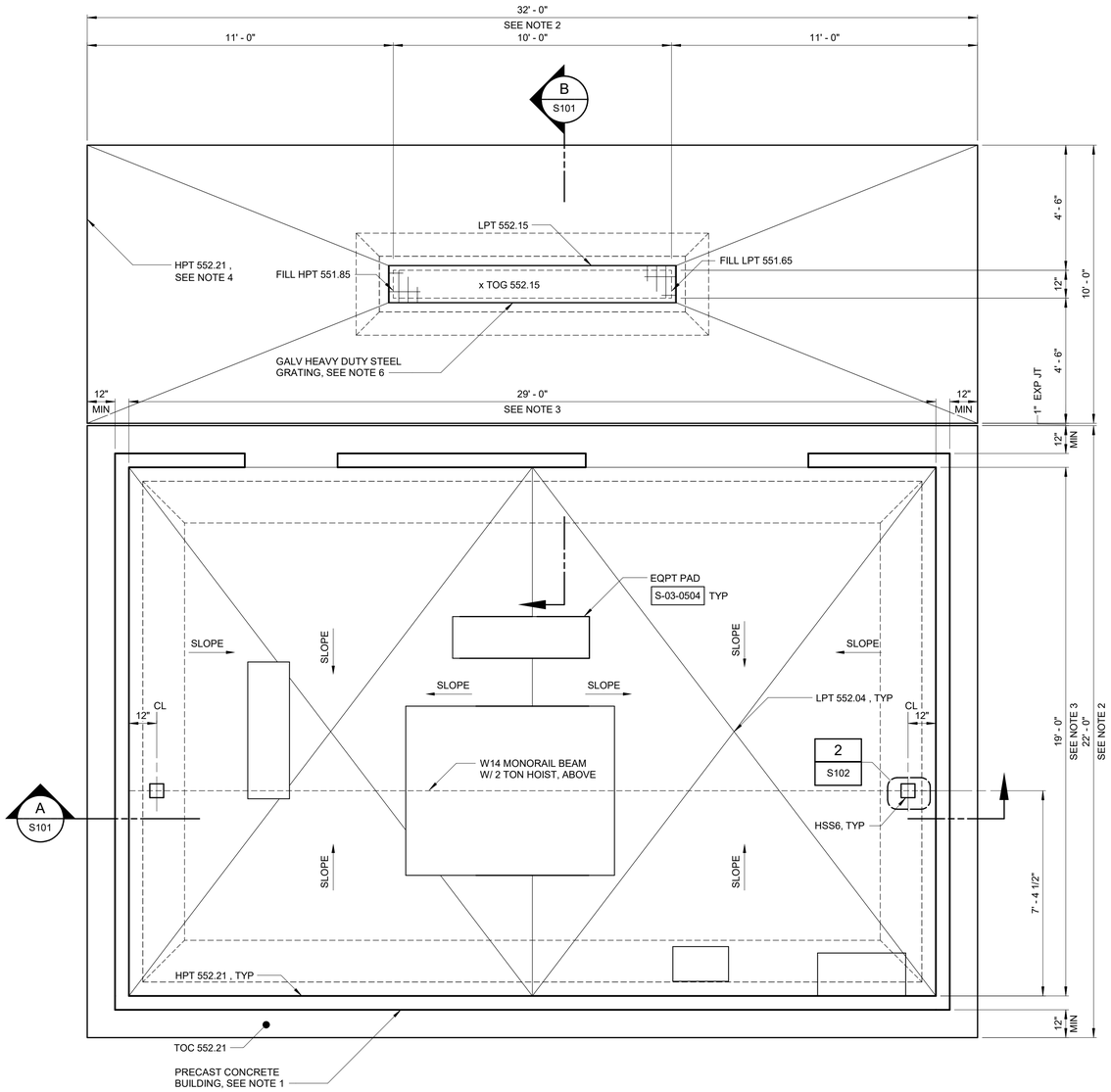

BOTTOM PLAN

3/8" = 1'-0"

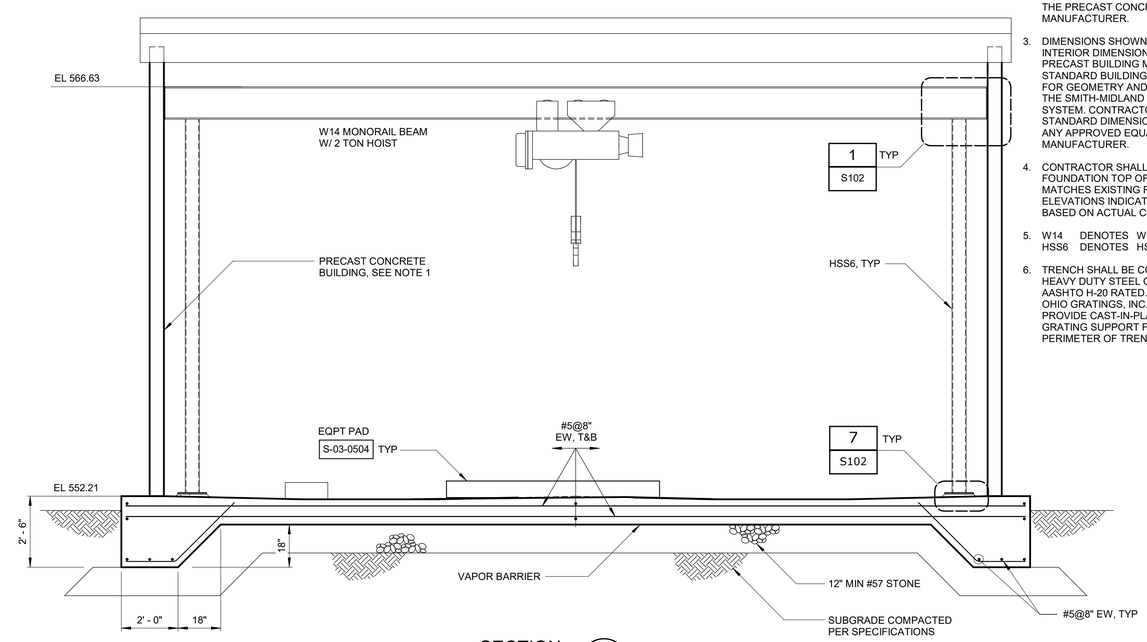

SECTION A S101

3/8" = 1'-0"

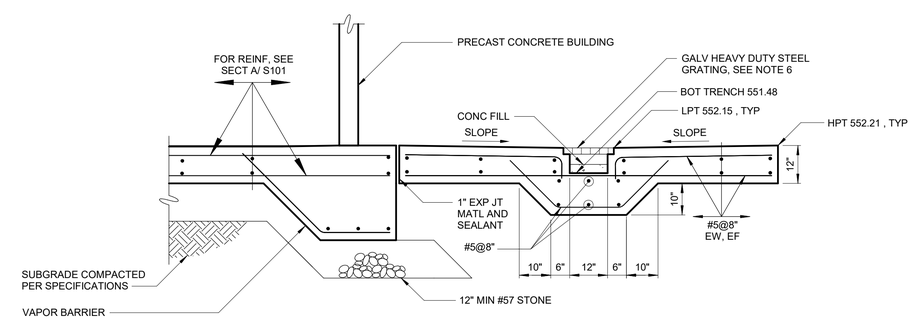

SECTION B S101

1/2" = 1'-0"

NOTES:

1. DESIGN OF ARCHITECTURAL PRECAST UTILITY BUILDING INCLUDING SUPPORT OF ALL APPURTENANCES AND INCLUSION OF ALL OPENINGS SHALL BE THE EXCLUSIVE RESPONSIBILITY OF THE PRECAST CONCRETE BUILDING MANUFACTURER IN ACCORDANCE WITH SPECIFICATION SECTION 03452 - ARCHITECTURAL PRECAST CONCRETE UTILITY BUILDING. REFER TO DRAWINGS C5 FOR PRECAST UTILITY BUILDING DIMENSIONS AND OPENING REQUIREMENTS.
2. FOUNDATION DIMENSIONS SHOWN ARE AS REQUIRED TO SUPPORT THE MAXIMUM SIZE ARCHITECTURAL PRECAST CONCRETE UTILITY BUILDING. PRIOR TO PLACING CONCRETE, CONTRACTOR SHALL VERIFY AND COORDINATE REQUIRED DIMENSIONS WITH THE PRECAST CONCRETE BUILDING MANUFACTURER.
3. DIMENSIONS SHOWN SHALL BE THE MINIMUM INTERIOR DIMENSIONS BASED ON THE PRECAST BUILDING MANUFACTURER'S STANDARD BUILDING SIZES. BASIS OF DESIGN FOR GEOMETRY AND DIMENSIONS SHOWN IS THE SMITH-MIDLAND EASI-SPAN BUILDING SYSTEM. CONTRACTOR SHALL COORDINATE STANDARD DIMENSION REQUIREMENTS WITH ANY APPROVED EQUAL BUILDING MANUFACTURER.
4. CONTRACTOR SHALL VERIFY BUILDING FOUNDATION TOP OF CONCRETE ELEVATION MATCHES EXISTING ROADWAY. ALL ELEVATIONS INDICATED SHALL BE ADJUSTED BASED ON ACTUAL CONDITIONS.
5. W14 DENOTES W12x43
   HSS6 DENOTES HSS6x6x3/8.
6. TRENCH SHALL BE COVERED BY GALVANIZED HEAVY DUTY STEEL GRATING AND SHALL BE AASHTO H-20 RATED. GRATING SHALL BE BY OHIO GRATINGS, INC., OR APPROVED EQUAL. PROVIDE CAST-IN-PLACE GALVANIZED STEEL GRATING SUPPORT FRAMES ALONG PERIMETER OF TRENCH.

REV	ISSUED FOR	DATE	BY

PROJECT ENGINEER:	J. PETERY
DESIGNED BY:	C. OHRNBERGER
DRAWN BY:	J. LUZON
CHECKED BY:	C. PHILLIPS
IF THIS BAR DOES NOT MEASURE 1" THEN DRAWING IS NOT TO FULL SCALE	0 1/2" 1"

PERMIT SET
DO NOT USE FOR
CONSTRUCTION

COMMONWEALTH OF VIRGINIA
CHRISTOPHER T. PHILLIPS
Lic. No.033796
04-21-2020
PROFESSIONAL ENGINEER

Hazen

HAZEN AND SAWYER
1555 ROSENEATH ROAD
RICHMOND, VIRGINIA 23230

FREDERICK-WINCHESTER SERVICE AUTHORITY
WINCHESTER, VIRGINIA

OPEQUON WATER RECLAMATION FACILITY
FOG FACILITY UPGRADES

FOG RECIEVING STATION NO. 2
STRUCTURAL
PLAN AND SECTION

DATE:	APRIL 2020
HAZEN NO.:	31439-003
CONTRACT NO.:	202008
DRAWING NUMBER:	S101

C:\Users\jluzon\Documents\31439-003-100-SS-STRU_JluzonJTDTX.rvt
4/17/2020 2:19:29 PM

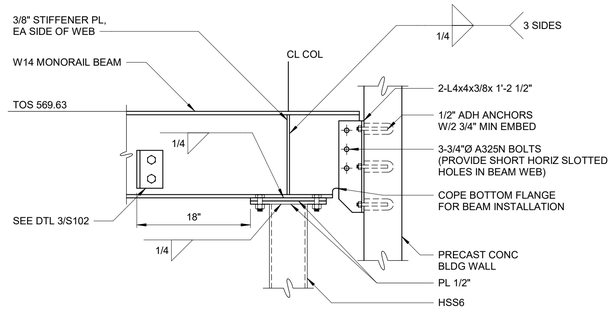

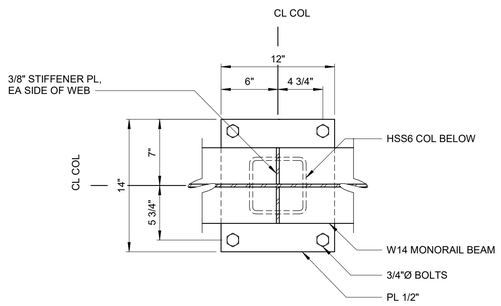

SECTION A-A

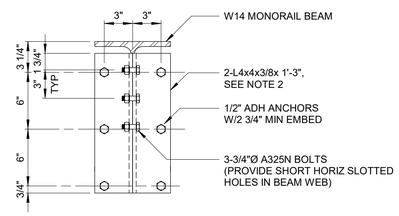

SECTION B-B

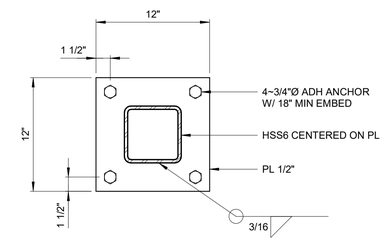

PLAN

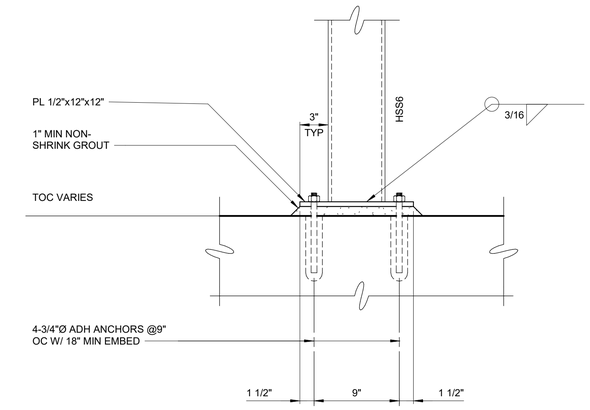

ELEVATION

DETAIL	2
1 1/2" = 1'-0"	S101

NOTE:
1. DO NOT CUT PRECAST BUILDING WALL REINFORCEMENT DURING DRILL-IN ANCHOR INSTALLATION. FIELD LOCATE REINFORCING PRIOR TO FABRICATION WITH GROUND PENETRATING RADAR OR OTHER ACCEPTABLE MEANS.
2. ADD LENGTH TO CLIP ANGLES AS REQUIRED TO ADJUST ANCHORS TO CLEAR REINFORCING WHILE MAINTAINING SPACING.

DETAIL	1
1" = 1'-0"	S101

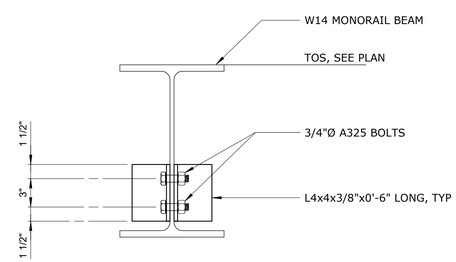

DETAIL	3
1 1/2" = 1'-0"	S102

REV	ISSUED FOR	DATE	BY

PROJECT ENGINEER:	J. PETERY
DESIGNED BY:	C. OHRNBERGER
DRAWN BY:	J. LUZON
CHECKED BY:	C. PHILLIPS
IF THIS BAR DOES NOT MEASURE 1" THEN DRAWING IS NOT TO FULL SCALE	0 1/2" 1"

PERMIT SET
DO NOT USE FOR
CONSTRUCTION

COMMONWEALTH OF VIRGINIA
CHRISTOPHER T. PHILLIPS
Lic. No.033796
04-21-2020
PROFESSIONAL ENGINEER

Hazen

HAZEN AND SAWYER
1555 ROSENEATH ROAD
RICHMOND, VIRGINIA 23230

FREDERICK-WINCHESTER SERVICE AUTHORITY
WINCHESTER, VIRGINIA

OPEQUON WATER RECLAMATION FACILITY
FOG FACILITY UPGRADES

FOG RECIEVING STATION NO. 2
STRUCTURAL
DETAILS

DATE:	APRIL 2020
HAZEN NO.:	31439-003
CONTRACT NO.:	202008
DRAWING NUMBER:	S102

C:\Users\jluzon\Documents\31439-003-100-SS-STRU_jluzonJTDTX.rvt
4/17/2020 2:19:29 PM

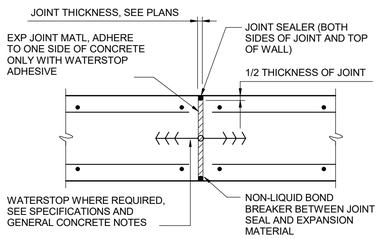

TYPICAL EXPANSION JOINT

S-03-0201

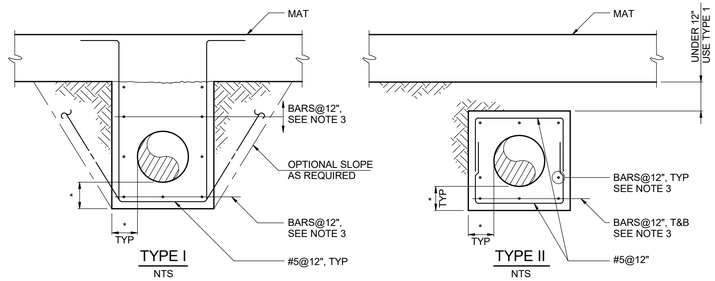

NOTE:

1. TIE IN ALL PIPES & CONDUITS BELOW GROUND FLOOR SLAB WHEN PILE FOUNDATION IS UTILIZED. USE TYPE I.
2. * DENOTES 9" FOR PIPES LESS THAN 42", 12" FOR PIPES 42" TO 72" AND 18" FOR PIPES GREATER THAN 84".
3. FOR 9" ENCASEMENTS USE #5 BARS, FOR 12" ENCASEMENTS USE #6 BARS AND FOR 18" ENCASEMENTS USE #7 BARS.

ALL PIPING AND CONDUITS BELOW SLABS ON EARTH TO BE ENCASED BY GENERAL CONTRACTOR UNLESS NOTED OTHERWISE.

PIPE ENCASEMENTS

S-03-0404

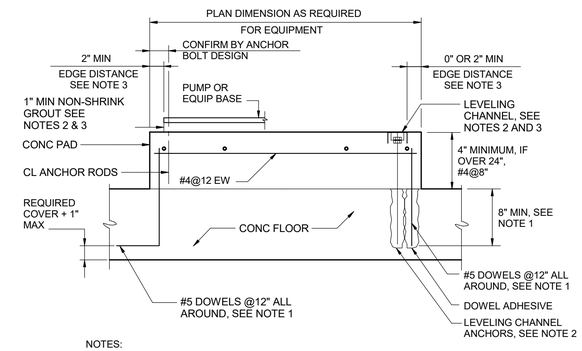

NOTES:

1. DOWELS MAY BE CAST IN WITH 90° HOOK OR ANCHORED WITH DOWEL ADHESIVE AT CONTRACTORS OPTION. WHERE FLOOR IS 8" THICK OR LESS, USE #4 DOWELS EMBEDDED TO WITHIN 2" OF BOTTOM OF FLOOR SLAB.
2. THE CONTRACTOR SHALL PROVIDE LEVELING CHANNELS AND LEVELING CHANNEL ANCHORS FOR SWITCHGEAR, SWITCHBOARDS, MOTOR CONTROL CENTERS, AND SIMILAR EQUIPMENT WHEN REQUIRED TO MEET EQUIPMENT MANUFACTURER'S LEVELING TOLERANCES. THE CONTRACTOR SHALL PROVIDE 1" MINIMUM NON-SHRINK GROUT FOR PUMPS AND SIMILAR EQUIPMENT WHEN REQUIRED TO MEET EQUIPMENT MANUFACTURER'S UNIFORM BEARING AND LEVELING REQUIREMENTS.
3. PRIOR TO PLACING CONCRETE PAD, LEVELING CHANNEL SIZE AND MEANS OF INSTALLATION, ANCHORAGE, GROUT, CONCRETE EDGE DISTANCE, AND CONCRETE BLOCKOUTS REQUIREMENTS SHALL BE COORDINATED WITH EQUIPMENT MANUFACTURER.
4. COAT DISSIMILAR MATERIALS PER THE CONTRACT DOCUMENTS.
5. STAGGER CHANNEL ANCHORS AND PAD DOWELS.

TYPICAL EQUIPMENT PAD

S-03-0504

REV	ISSUED FOR	DATE	BY

PROJECT ENGINEER:	J. PETERY
DESIGNED BY:	C. OHRNBERGER
DRAWN BY:	J. LUZON
CHECKED BY:	C. PHILLIPS
IF THIS BAR DOES NOT MEASURE 1" THEN DRAWING IS NOT TO FULL SCALE	0 1/2" 1"

PERMIT SET
DO NOT USE FOR CONSTRUCTION

COMMONWEALTH OF VIRGINIA
CHRISTOPHER T. PHILLIPS
Lic. No.033796
04-21-2020
PROFESSIONAL ENGINEER

Hazen

HAZEN AND SAWYER
1555 ROSENEATH ROAD
RICHMOND, VIRGINIA 23230

FREDERICK-WINCHESTER SERVICE AUTHORITY
WINCHESTER, VIRGINIA

OPEQUON WATER RECLAMATION FACILITY
FOG FACILITY UPGRADES

FOG RECIEVING STATION NO. 2
STRUCTURAL
STANDARD DETAILS

DATE:	APRIL 2020
HAZEN NO.:	31439-003
CONTRACT NO.:	202008
DRAWING NUMBER:	S103

C:\Users\jluzon\Documents\31439-003-100-SS-STRU_JluzonJTDTX.rvt
4/17/2020 2:19:29 PM

SYMBOLS

T / S	THERMOSTAT/SENSOR
	SUPPLY AIR DUCT SECTION-UP
	RETURN AIR DUCT
	EXHAUST AIR DUCT
	FLUE
	DIRECTIONAL FLOW ARROW
AHU-1	QUANTITY DESIGNATION
	EQUIPMENT DESIGNATION
	SUPPLY AIR REGISTER
SR1	SUPPLY AIR REGISTER (TYPE #)
RR1	RETURN AIR REGISTER (TYPE #)
ER1	EXHAUST AIR REGISTER (TYPE #)
20X10 SR1	20X10 NECK SIZE, SUPPLY REGISTER (TYPE #)
1000 CFM	1000 CUBIC FEET PER MINUTE AIRFLOW RATE
BOD XX'-XX"	DISTANCE FROM FINISHED FLOOR
	CEILING DIFFUSER (SYSTEM TYPE)
CDA	
24X24	LOUVERED FACE SIZE
300 CFM	CUBIC FEET PER MINUTE AIRFLOW RATE SETTING (MAX)

LINETYPES

	NEW - HVAC
	NEW - ALL ADDITIONAL DISCIPLINES
	NEW - HIDDEN
	VENT
	EXISTING - HIDDEN
	EXISTING - ALL DISCIPLINES

ABBREVIATIONS

AI	ANALOG INPUT
AC	AIR CONDITIONING, AIR CONDITIONING UNIT
ACCU	AIR COOLED CONDENSING UNIT
ACC	AIR COOLED CONDENSER
AD	ACCESS DOOR
AFF	ABOVE FINISHED FLOOR
AFUE	ANNUAL FUEL UTILIZATION EFFICIENCY
AHU	AIR HANDLING UNIT
AO	ANALOG OUTPUT
APD	AIR PRESSURE DROP
ATC	AUTOMATIC TEMPERATURE CONTROL
ATU	AIR TERMINAL UNIT
B	BOILER
BD	GRAVITY BACKDRAFT DAMPER
BFP	BACKFLOW PREVENTER
BHP	BRAKE HORSEPOWER
BOD	BOTTOM OF DUCT
BOR	BOTTOM OF REGISTER
BOT	BOTTOM
CB	CIRCUIT BREAKER
CFM	CUBIC FEET OF STANDARD AIR PER MINUTE
CH	CABINET UNIT HEATER
CLG	CEILING
CONN	CONNECTION
CWS	CHILLED WATER SUPPLY
CWR	CHILLED WATER RETURN
DI	DIGITAL INPUT
DB	DRY BULB
DDC	DIRECT DIGITAL CONTROL
DX	DIRECT EXPANSION REFRIGERANT
DIA, ∅	DIAMETER
DM	DAMPER MOTOR
DN	DOWN
DO	DIGITAL OUTPUT
EA	EXHAUST AIR
EC	ELECTRICAL CONTRACTOR
EAT	ENTERING AIR TEMPERATURE
EDH	ELECTRIC DUCT HEATER
EG	EXHAUST GRILLE
EUH	ELECTRIC UNIT HEATER
EF	EXHAUST FAN
EL/ELEV	ELEVATION
ES	ENTHALPY SENSOR
ESP	EXTERNAL STATIC PRESSURE
ET	EXPANSION TANK
EWT	ENTERING WATER TEMPERATURE
FA	FREE AREA
FC	FORWARD CURVED OR FAN COIL
FD	FIRE DAMPER WITH ACCESS DOOR
FLA	FULL LOAD AMPS
FOR	FUEL OIL RETURN
FOS	FUEL OIL SUPPLY
FOV	FUEL OIL VENT
FPM	FEET PER MINUTE
FTR	FINNED TUBE RADIATION
GC	GENERAL CONTRACTOR
GPM	GALLONS PER MINUTE
HG	HOT GAS
HP	HORSEPOWER OR HEAT PUMP
HV	HEATING AND VENTILATING UNIT
HWS	HOT WATER SUPPLY
HWR	HOT WATER RETURN
IDEC	INDIRECT EVAPORATIVE COOLING
IN. WG	INCHES OF WATER GAGE
KW	KILOWATT (1,000 WATTS)
L1	LOUVER (TYPE 1)
LAT	LEAVING AIR TEMPERATURE
LD1	LINEAR DIFFUSER (TYPE 1)
LF	LINEAR FEET
LR	LINEAR RETURN
LWT	LEAVING WATER TEMPERATURE
MAU	MAKEUP AIR UNIT
MBH	1,000 BTU PER HOUR
MC	MECHANICAL CONTRACTOR
MCA	MINIMUM CIRCUIT AMPACITY
MD	MOTORIZED DAMPER
MTD	MOUNTED
NC	NORMALLY CLOSED, NOISE CRITERIA
NK	NECK
NO	NORMALLY OPEN
NTS	NOT TO SCALE
OA	OUTSIDE AIR
OAI	OUTSIDE AIR INTAKE
ORP	OXYGEN REDUCTION POTENTIAL
P	PUMP
PC	PLUMBING CONTRACTOR
PD	PRESSURE DROP
PF	PROPELLER FAN
PH, ∅	PHASE
PPU	POSITIVE PRESSURIZATION UNIT
PROP	PROPELLER
PRV	PRESSURE REGULATING VALVE
PTAC	PACKAGED TERMINAL AIR CONDITIONING UNIT
PS	PRESSURE SENSOR
PW	POTABLE WATER
RA	RETURN AIR
RH	RELATIVE HUMIDITY
RL	REFRIGERANT LIQUID
RLA	RATED LINE AMPS
RS	REFRIGERANT SUCTION
RPM	REVOLUTIONS PER MINUTE
SA	SUPPLY AIR
SD	SMOKE DETECTOR
SF	SUPPLY AIR FAN
SG	SUPPLY GRILLE
SHR	SENSIBLE HEAT RATIO
SP	STATIC PRESSURE
SPEC	SPECIFICATION
SS	STAINLESS STEEL
SV	SOLENOID VALVE
TEMP	TEMPERATURE
TF	TRANSFER FAN
TH	TOTAL HEAT
TOD	TOP OF DUCT
TOU	TOP OF UNIT
TOR	TOP OF REGISTER
TSP	TOTAL STATIC PRESSURE
TS	TEMPERATURE SENSOR
TYP	TYPICAL
UH	UNIT HEATER
V	VOLTS
VAV	VARIABLE AIR VOLUME
VD	VOLUME DAMPER
VEL	VELOCITY
VH	HEATING CONTROL VALVE
VC	COOLING CONTROL VALVE
VFD	VARIABLE FREQUENCY DRIVE
VVT	VARIABLE VOLUME AND VARIABLE TEMPERATURE
WPD	WATER PRESSURE DROP
W/	WITH
WB	WET BULB
WC	WATER COLUMN

GENERAL NOTES

1. THE SYMBOLS AND ABBREVIATIONS LIST ON THIS SHEET IS A COMPREHENSIVE STANDARD GUIDE INTENDED FOR GENERAL USE ON ALL PROJECTS. THEREFORE NOT ALL THE SYMBOLS AND ABBREVIATIONS CONTAINED IN THIS LIST ARE NECESSARILY USED ON THIS PARTICULAR PROJECT AND SHOULD BE USED FOR CLARIFICATION ONLY.
2. EQUIPMENT SIZES AND LOCATIONS ARE APPROXIMATE. ACTUAL DIMENSIONS TO BE DETERMINED BY EQUIPMENT FURNISHED. COORDINATE HVAC WORK WTIH THE WORK OF ALL OTHER TRADES.
3. FINAL OPENING DIMENSIONS, CONCRETE PAD SIZES, AND LOCATIONS MUST BE COORDINATED DURING CONSTRUCTION WITH APPROVED EQUIPMENT.
4. FINAL SIZES OF FLOOR OPENINGS, DUCT PLENUMS, TRANSITIONS AND PIPING CONNECTIONS TO ALL EQUIPMENT SHALL BE DETERMINED BY EQUIPMENT FURNISHED.
5. THE DRAWINGS ARE SCHEMATIC IN NATURE AND SHOW INTENDED GENERAL LOCATION OF HVAC EQUIPMENT AND SYSTEMS. NOT ALL OFFSETS AND REQUIRED FITTINGS FOR ACTUAL FIELD INSTALLATION ARE INTENDED TO BE SHOWN FOR INSTALLATION OF SYSTEMS IN THE SPACE AVAILABLE IN CONSIDERATION OF WORK OF OTHER TRADES AND FIELD CONDITIONS. CONTRACTOR SHALL PROVIDE ADDITIONAL OFFSETS IN DUCTWORK AND PIPING AS REQUIRED TO AVOID SUCH INTERFERENCES OR FIELD CONDITIONS AT NO ADDITIONAL COST TO THE ORIGINAL CONTRACT AMOUNT.
6. COORDINATE THE REQUIREMENTS FOR HVAC OPENINGS AND SLEEVES IN BUILDING ELEMENTS WITH THE GC.
7. CONTRACTOR SHALL REFER TO SPECIFICATION SECTION 099000 FOR PAINTING REQUIREMENTS UNLESS OTHERWISE NOTED.
8. REFER TO ELECTRICAL DRAWINGS OR SPECIFICATIONS FOR INTERLOCKING WIRING REQUIREMENTS.
9. PROVIDE ADEQUATE SUPPORT, PER THE MANUFACTURER'S RECOMMENDATIONS, FOR ALL HVAC EQUIPMENT.
10. CONTRACTOR SHALL BE RESPONSIBLE FOR CHECKING ELECTRICAL RATINGS FROM CERTIFIED DRAWINGS OF EQUIPMENT AND SHALL MAKE ANY BRANCH CIRCUIT DISTRIBUTION MODIFICATION REQUIREMENTS WITHOUT ANY ADDITIONAL COST TO OWNER. THE CONTRACTOR SHALL SUBMIT A SCHEDULE OF SUCH CHANGES FOR APPROVAL BY ENGINEER.
11. WHEREVER THE REQUIREMENTS AND REGULATIONS OF STATE, FEDERAL AND LOCAL AUTHORITIES HAVING JURISDICTION DIFFER FROM THE DRAWINGS OR SPECIFICATIONS, THEY SHALL TAKE PRECEDENCE AND SHALL BE MADE PART OF THE CONTRACT (EXCEPT WHERE THE DRAWINGS OR SPECIFICATIONS ARE MORE STRINGENT).
12. THERMOSTATS, SENSORS, AND/OR CONTROL PANEL LOCATIONS SHOWN ARE APPROXIMATE AND SHALL BE COORDINATED TO SUIT FIELD CONDITIONS.
13. INSTALL WALL MTD SENSORS, CONTROLS AND THERMOSTATS 5'-0" AFF UNLESS OTHERWISE NOTED. ALIGN WITH OTHER NEARBY ITEMS SUCH AS LIGHT SWITCHES. DO NOT INSTALL CLOSER THAN 6-INCHES FROM EDGE OF DOOR FRAME OR CORNER OF WALL AS SHOWN ON ARCH PLANS. WHERE CONFLICTS MAY OCCUR WITH ITEMS SUCH AS LIGHT SWITCHES, MOUNT THE SENSOR OR CONTROL DEVICE 4'-6" AFF CENTERED ABOVE THE LIGHT SWITCH.
14. PROVIDE ADEQUATE MEANS OF ACCESS CLEARANCE FOR ALL HVAC/MECHANICAL EQUIPMENT AND SYSTEMS THAT REQUIRE ACCESS FOR PROPER OPERATION, MAINTENANCE AND REPAIR PER RECOMMENDED MANUFACTURER CLEARANCES. PROVIDE ACCESS DOORS WHERE NECESSARY IN FINISHED WALLS OR DRYWALL CEILINGS FOR ACCESS TO VALVES, DAMPERS, OR CONTROL DEVICES.
15. COORDINATE THE REQUIREMENTS OF HVAC HANGERS AND SUPPORTS W/ OTHER PRIME CONTRACTORS PROVIDING STRUCTURAL AND/OR ARCHITECTURAL BUILDING ELEMENTS WHICH HVAC SUPPORTS SHALL INTERFACE.
16. CONTRACTOR SHALL OBTAIN AND PAY ALL FEES RELATED TO PERMITTING, AND INSPECTIONS.
17. FOR ADDITIONAL REQUIREMENTS REFER TO SPECIFICATIONS.

REV	ISSUED FOR	DATE	BY

PROJECT ENGINEER:	J. PETERY
DESIGNED BY:	J. POPE
DRAWN BY:	N. BURGER
CHECKED BY:	D. REAGAN
IF THIS BAR DOES NOT MEASURE 1" THEN DRAWING IS NOT TO FULL SCALE	0 1/2" 1"

PERMIT SET
DO NOT USE FOR CONSTRUCTION

COMMONWEALTH OF VIRGINIA
DANNY LEE REAGAN
Lic. No.35937
04-21-2020
PROFESSIONAL ENGINEER

Hazen

HAZEN AND SAWYER
1555 ROSENEATH ROAD
RICHMOND, VIRGINIA 23230

FREDERICK-WINCHESTER SERVICE AUTHORITY
WINCHESTER, VIRGINIA

OPEQUON WATER RECLAMATION FACILITY
FOG FACILITY UPGRADES

HVAC
GENERAL NOTES, ABBREVIATIONS, AND SYMBOLS

DATE:	APRIL 2020
HAZEN NO.:	31439-003
CONTRACT NO.:	202008
DRAWING NUMBER:	H1

O:\31439-RIC\31439-003\Engineering\Drawings\HVAC\31439-003-HVAC-G.rvt
4/17/2020 2:23:54 PM

ELECTRIC UNIT HEATERS

TAG	LOCATION	MANUFACTURER		TYPE	CAPACITY (KW)	AIRFLOW (CFM)	DIMENSIONS			WEIGHT	MOTOR				NOTES
		MAKE	MODEL				WIDTH (IN)	HEIGHT (IN)	DEPTH (IN)	LBS	POWER HP	VOLT	PH	HZ	
EUH-1	FOG RECEIVING STATION NO. 2	INDEECO	IUH	INDUSTRIAL UNIT HEATER	15	1342	19.25	23.5	16.25	45	1/4	480	3	60	1-7

NOTES:

1. PROVIDE WALL MOUNTING BRACKET
2. PROVIDE ADJUSTABLE OUTLET LOUVERS
3. PROVIDE PILOT LIGHT
4. PROVIDE POWER DISCONNECT SWITCH
5. PROVIDE BUILT-IN THERMOSTAT
6. CATALOG NUMBER 238-UL15U
7. REFER TO SPECIFICATION 23 82 39

FANS

TAG	LOCATION	MANUFACTURER		DESIGN AIRFLOW (CFM)	E.S.P. ("WG)	FAN		FAN SPEED (RPM)	WEIGHT (LBS)	MOTOR			POWER			NOTES
		MAKE	MODEL			TYPE	DRIVE			BHP	HP	FLA	VOLT	PH	HZ	
EF-1	FOG RECEIVNG STATION NO. 2	GREENHECK	SE1-12-432-VG	600	0.2	SIDEWALL EXHAUST	DIRECT	1,119	27	0.06	0.25	3.3	115	1	60	1-5
EF-2	FOG RECEIVNG STATION NO. 2	GREENHECK	SE2-16-423-A	2,300	0.375	SIDEWALL EXHAUST	DIRECT	1,750	47	0.35	0.5	9.8	115	1	60	1-5

NOTES:

1. ALUMINUM CONSTRUCTION
2. PROVIDE OSHA FAN GUARD
3. PROVIDE NEMA 4X DISCONNECT SWITCH
4. TEFC MOTOR
5. REFER TO SPECIFICATION 23 34 00

LOUVERS

TAG	AREA SERVED	UNIT SERVED	MANUFACTURER		TYPE	MATERIAL	AIRFLOW (CFM)	SIZE			FREE AREA (FT2)	MAX. FACE VELOCITY	STATIC PRESS DROP ("WG)	NOTES
			MAKE	MODEL				WIDTH (IN)	HEIGHT (IN)	DEPTH (IN)				
L-1	FOG RECEIVING STATION NO. 2	EF-1,2	RUSKIN	ELC6375DAX	COMBINATION LOUVER	ALUMINUM	2,900	42	42	6	5.57	520	0.04	1-5
L-2	FOG RECEIVING STATION NO. 2	EF-1	RUSKIN	ELC6375DAX	COMBINATION LOUVER	ALUMINUM	600	24	24	6	1.52	395	0.025	1-5
L-3	FOG RECEIVING STATION NO. 2	EF-2	RUSKIN	ELC6375DAX	COMBINATION LOUVER	ALUMINUM	2,300	36	36	6	3.94	585	0.05	1-5

NOTES:

1. PROVIDE ALUMINUM BIRD SCREEN
2. HIDDEN FRAME
3. PROVIDE WITH INSTALLATION ANGLES
4. PROVIDE WITH 120V ELECTRIC ACTUATOR
5. REFER TO SPECIFICATION 23 31 13

SEQUENCE OF OPERATION:

1. EF-1 SHALL BE CONTROLLED BY A LOCAL PROGRAMMABLE TIME CLOCK.

   THE PROGRAMMABLE TIME CLOCK SHALL ESTABLISH OPERATING AND NON-OPERATING HOURS FOR THE BUILDING (ADJ.).

   EF-1 SHALL BE COMMANDED ON DURING TIMES WHEN THE TIME CLOCK INDICATES OPERATING HOURS.

   EF-1 SHALL BE COMMANDED OFF DURING TIMES WHEN THE TIME CLOCK INDICATES NON-OPERATING HOURS.

2. EF-2 SHALL BE CONTROLLED BY A LOCAL ELECTRIC THERMOSTAT.

   THE THERMOSTAT SHALL HAVE AN UPPER AND A LOWER COOLING SETPOINT IN ORDER TO ESTABLISH A DEAD BAND TEMPERATURE RANGE.

   EF-2 SHALL BE COMMANDED ON WHEN THE THERMOSTAT READING IS ABOVE THE UPPER COOLING SETPOINT (ADJ.).

   EF-2 SHALL BE COMMANDED OFF WHEN THE THERMOSTAT READING IS BELOW THE LOWER COOLING SETPOINT (ADJ.)

3. THE ELECTRIC ACTUATOR CONTROLLING LOUVER L-1 SHALL OPEN THE DAMPER COMPONENT OF L-1 WHEN EF-1 AND/OR EF-2 IS COMMANDED ON. THE DAMPER COMPONENT OF LOUVER L-1 SHALL BE CONTROLLED BY PARALLEL SIGNALS FROM BOTH THE PROGRAMMABLE TIME CLOCK AND ELECTRIC THERMOSTAT. THE DAMPER COMPONENT OF L-1 SHALL OPEN WHEN THE PROGRAMMABLE TIME CLOCK INDICATES OPERATING HOURS AND/OR WHEN THE THERMOSTAT READING IS ABOVE THE UPPER COOLING SETPOINT (ADJ.).

   THE ELECTRIC ACTUATOR CONTROLLING LOUVER L-1 SHALL CLOSE THE DAMPER COMPONENT OF L-1 ONLY WHEN BOTH EF-1 AND EF-2 ARE COMMANDED OFF. THE DAMPER COMPONENT OF L-1 SHALL CLOSE WHEN THE PROGRAMMABLE TIME CLOCK INDICATES NON-OPERATING HOURS AND THE THERMOSTAT READING IS BELOW THE LOWER COOLING SETPOINT (ADJ.) SIMULTANEOUSLY.

4. THE ELECTRIC ACTUATOR CONTROLLING LOUVER L-2 SHALL OPEN THE DAMPER COMPONENT OF L-2 WHEN EF-1 IS COMMANDED ON AND CLOSE THE DAMPER COMPONENT OF L-2 WHEN EF-1 IS COMMANDED OFF.

5. THE ELECTRIC ACTUATOR CONTROLLING LOUVER L-3 SHALL OPEN THE DAMPER COMPONENT OF L-3 WHEN EF-2 IS COMMANDED ON AND CLOSE THE DAMPER COMPONENT OF L-3 WHEN EF-2 IS COMMANDED OFF.

6. EUH-1 SHALL BE CONTROLLED BY A MANUFACTURER PROVIDED, BUILT-IN THERMOSTAT.

   WHEN THE SPACE TEMPERATURE READING IS BELOW THE HEATING SETPOINT (ADJ.), EUH-1 SHALL BE COMMANDED ON.

   WHEN THE SPACE TEMPERATURE IS ABOVE THE HEATING SETPOINT (ADJ.), EUH-1 SHALL BE COMMANDED OFF.

O:\31439-RIC\31439-003\Engineering\Drawings\HVAC\31439-003-HVAC-G.rvt
4/17/2020 2:23:55 PM

REV	ISSUED FOR	DATE	BY

PROJECT ENGINEER:	J. PETERY
DESIGNED BY:	J. POPE
DRAWN BY:	N. BURGER
CHECKED BY:	D. REAGAN
IF THIS BAR DOES NOT MEASURE 1" THEN DRAWING IS NOT TO FULL SCALE	0 1/2" 1"

PERMIT SET
DO NOT USE FOR CONSTRUCTION

COMMONWEALTH OF VIRGINIA
DANNY LEE REAGAN
Lic. No.35937
04-21-2020
PROFESSIONAL ENGINEER

Hazen

HAZEN AND SAWYER
1555 ROSENEATH ROAD
RICHMOND, VIRGINIA 23230

FREDERICK-WINCHESTER SERVICE AUTHORITY
WINCHESTER, VIRGINIA

OPEQUON WATER RECLAMATION FACILITY
FOG FACILITY UPGRADES

HVAC
SCHEDULES AND SEQUENCE

DATE:	APRIL 2020
HAZEN NO.:	31439-003
CONTRACT NO.:	202008
DRAWING NUMBER:	H2

NOTES:

1. INSTALL LOUVER WITH BOTTOM 9' - 0" AFF.
2. ELECTRIC UNIT HEATER TO BE MOUNTED WITH WALL MOUNTING BRACKET WITH BOTTOM OF HEATER LOCATED 9' - 0" AFF. HEATER SHALL BE MOUNTED A MINIMUM OF 7" FROM WALL. SEE DETAIL H-23-0604.
3. SEE DETAIL H-23-0624.

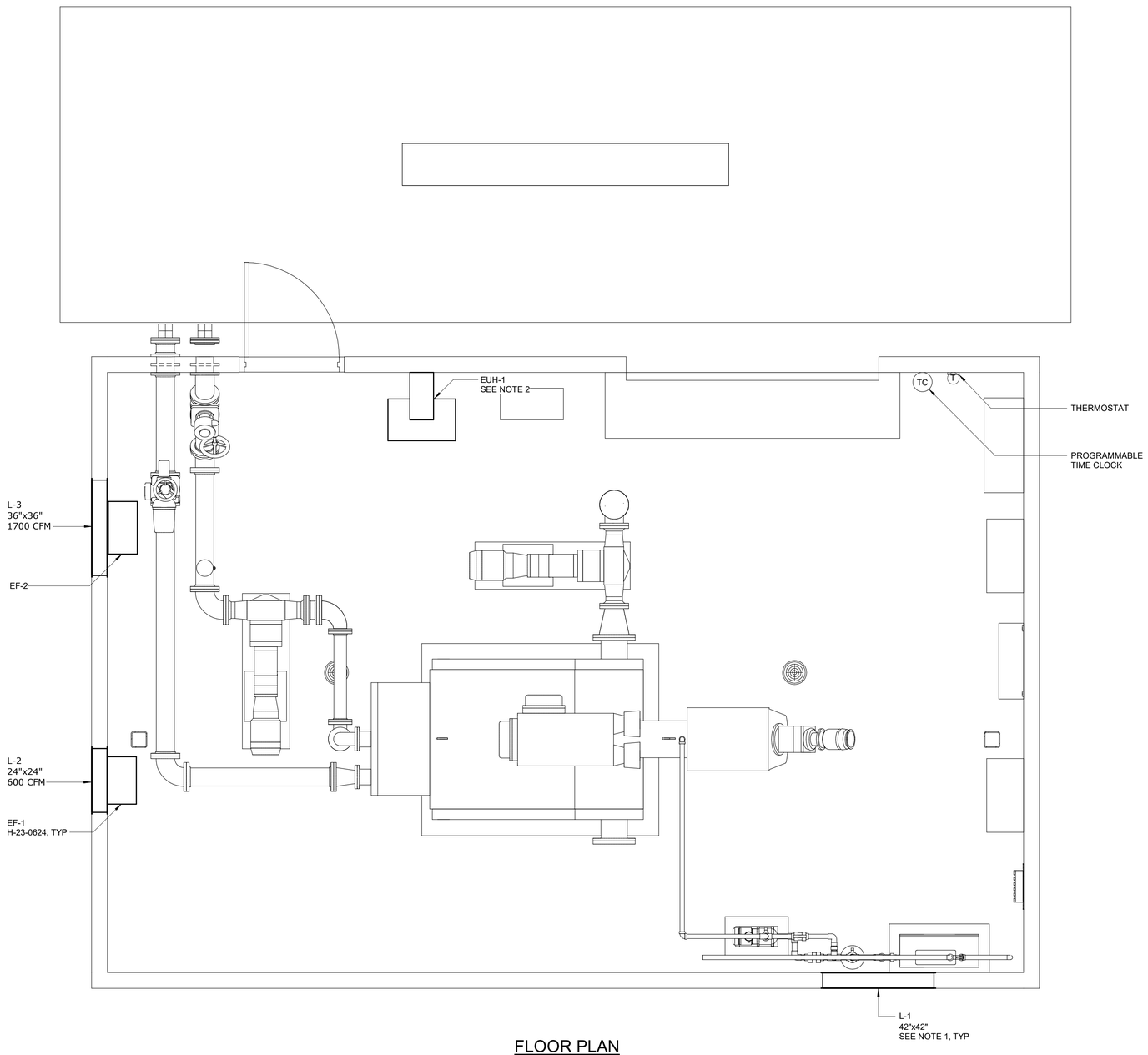

FLOOR PLAN

1/2" = 1'-0"

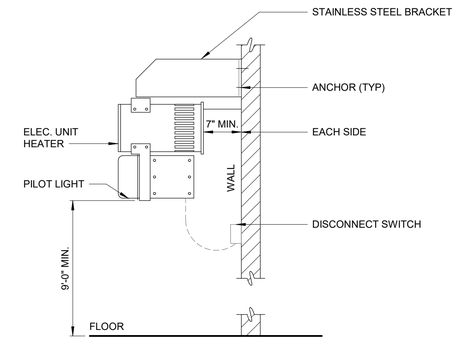

ELECTRIC UNIT
HEATER
INSTALLATION

H-23-0604

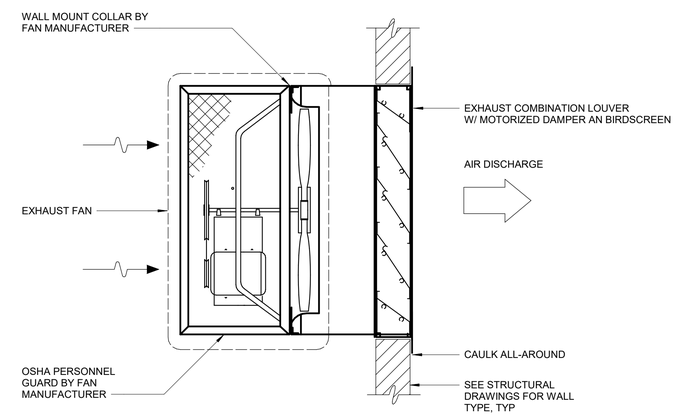

PROPELLER FAN

H-23-0624

REV	ISSUED FOR	DATE	BY

PROJECT ENGINEER:	J. PETERY
DESIGNED BY:	J. POPE
DRAWN BY:	N. BURGER
CHECKED BY:	D. REAGAN
IF THIS BAR DOES NOT MEASURE 1" THEN DRAWING IS NOT TO FULL SCALE	0 1/2" 1"

PERMIT SET
DO NOT USE FOR
CONSTRUCTION

COMMONWEALTH OF VIRGINIA
DANNY LEE REAGAN
Lic. No.35937
04-21-2020
PROFESSIONAL ENGINEER

Hazen

HAZEN AND SAWYER
1555 ROSENEATH ROAD
RICHMOND, VIRGINIA 23230

FREDERICK-WINCHESTER SERVICE AUTHORITY
WINCHESTER, VIRGINIA

OPEQUON WATER RECLAMATION FACILITY
FOG FACILITY UPGRADES

FOG RECIEVING STATION NO. 2
HVAC
FLOOR PLAN AND DETAILS

DATE:	APRIL 2020
HAZEN NO.:	31439-003
CONTRACT NO.:	202008
DRAWING NUMBER:	H100

C:\Users\juzon\Documents\31439-003-100-SS-HVAC_jluzonJTDTX.rvt
4/17/2020 2:26:09 PM

INSTRUMENT AND FUNCTION SYMBOLS

LOCATION AND ACCESSIBILITY	SHARED DISPLAY/SHARED CONTROL: PRIMARY CHOICE OR BASIC PROCESS CONTROL SYSTEM	SHARED DISPLAY/SHARED CONTROL: ALTERNATE CHOICE OR SAFETY INSTRUMENTED SYSTEM	COMPUTER SYSTEMS AND SOFTWARE	DISCRETE
– LOCATED IN FIELD – NOT PANEL, CABINET, OR CONSOLE MOUNTED – VISIBLE AT FIELD LOCATION – NORMALLY OPERATOR ACCESSIBLE	ABCD 12345	ABCD 12345	ABCD 12345	ABCD 12345
– LOCATED IN OR ON FRONT OF CENTRAL OR MAIN PANEL OR CONSOLE – VISIBLE ON FRONT OF PANEL OR ON VIDEO DISPLAY – NORMALLY OPERATOR ACCESSIBLE AT PANEL FRONT OR CONSOLE	ABCD 12345	ABCD 12345	ABCD 12345	ABCD 12345
– LOCATED IN REAR OF CENTRAL OR MAIN PANEL – LOCATED IN CABINET BEHIND PANEL – NOT VISIBLE ON FRONT OF PANEL OR ON VIDEO DISPLAY – NOT NORMALLY OPERATOR ACCESSIBLE AT PANEL OR CONSOLE	ABCD 12345	ABCD 12345	ABCD 12345	ABCD 12345
– LOCATED IN OR ON FRONT OF SECONDARY OR LOCAL PANEL OR CONSOLE – VISIBLE ON FRONT OF PANEL OR ON VIDEO DISPLAY – NORMALLY OPERATOR ACCESSIBLE AT PANEL FRONT OR CONSOLE	ABCD 12345	ABCD 12345	ABCD 12345	ABCD 12345
– LOCATED IN REAR OF SECONDARY OR LOCAL PANEL – LOCATED IN FIELD CABINET – NOT NORMALLY OPERATOR ACCESSIBLE AT PANEL OR CONSOLE	ABCD 12345	ABCD 12345	ABCD 12345	ABCD 12345

X — SUFFIX (X) TO DIFFERENTIATE BETWEEN INSTRUMENTS AND FUNCTIONS THAT WOULD OTHERWISE HAVE THE SAME IDENTIFICATION.

SINGLE INSTRUMENT OR OTHER COMPONENT HAVING MULTIPLE FUNCTIONS OR SHARING A COMMON HOUSING

(ZZZ) — DESIGNATIONS OF CONTROL FUNCTIONS (ZZZ) ASSOCIATED WITH INSTRUMENT OR OTHER COMPONENTS.

AHC	AUTO/HOLD/CLOSE	OSC	OPEN/STOP/CLOSED
AM	AUTO/MANUAL	POT	POTENTIOMETER
CALC	CALCULATION	RL	RAISE/LOWER
DEV	DEVIATION	RS	RUN/STOP
MOA	MANUAL/OFF/AUTO	RSL	RAISE/STOP/LOWER
HOR	HAND/OFF/REMOTE	SD	SHUTDOWN
LOS	LOCKOUT STOP	SEL	SELECT
LR	LOCAL/REMOTE	SP	SET POINT
LSR	LOCAL/STOP/REMOTE	SR	START/RESET
OO	ON / OFF	SS	STOP/START
OC	OPEN/CLOSE		

* ABCD 12345 — INSTRUMENT WITH COMPUTING OR CONVERTING FUNCTION

* ABCD 12345 — CONTROL SYSTEM COMPUTING FUNCTION

CONVERT

- E – VOLTAGE
- I – CURRENT
- P – PNEUMATIC
- A – ANALOG
- B – BINARY
- H – HYDRAULIC
- O – ELECTROMAGNETIC, SONIC
- R – RESISTANCE (ELECT.)
- D – DIGITAL

COMPUTE

- *
- Σ SUMMING
- SUBTRACTOR
- X MULTIPLYING
- ÷ DIVIDING
- ROOT EXTRACTION
- P PROPORTIONAL
- R DERIVATIVE
- Σ/n AVERAGING
- 1:1 RATIO
- PID PID
- DIFFERENCE
- HIGH SELECTING
- LOW SELECTING
- INTEGRAL
- # COMPLEX FUNCTION

= 1, 2, 3, etc.
REFER TO NOTE ON SAME SHEET FOR BRIEF DESCRIPTION

* — ELECTRICAL CONTROL INTERLOCK

— COMPLEX INTERLOCK
= 1, 2, 3, etc.
REFER TO NOTE ON SAME SHEET FOR BRIEF DESCRIPTION

AND — AND LOGIC

OR — OR LOGIC

ABCD 1234 — PILOT LIGHT

VALVE, GATE, AND ACTUATOR SYMBOLS

- GATE VALVE
- PLUG VALVE
- GLOBE VALVE
- BALL VALVE
- BUTTERFLY VALVE
- CHECK VALVE
- 3-WAY VALVE
- 3-WAY BALL VALVE
- DIAPHRAGM VALVE
- PINCH VALVE
- NEEDLE VALVE
- SLUICE GATE
- STOP/SLIDE GATE
- S — SOLENOID ACTUATOR
- P — PNEUMATIC ACTUATOR
- ROTARY VALVE
- BACKFLOW PREVENTER
- PRESSURE RELIEF VALVE
- VACUUM RELIEF VALVE
- COMBINATION VACUUM AND PRESSURE RELIEF VALVE
- PRESSURE-REDUCING REGULATOR
- BACKPRESSURE REGULATOR
- V — AIR RELEASE VALVE
- M — ROTARY MOTOR
- E/H — ELECTROHYDRAULIC ACTUATOR
- MANUAL ACTUATOR
- ENERGY DISSIPATING VALVE

PUMP AND EQUIPMENT SYMBOLS

- CENTRIFUGAL WET PIT PUMP (OR DRY-PIT SUBMERSIBLE)
- BLOWER (CENTRIFUGAL)
- GEAR PUMP OR BLOWER (POSITIVE DISPLACEMENT)
- SCREW PUMP
- PISTON PUMP
- DIAPHRAGM PUMP
- ROTARY LOBE PUMP OR BLOWER (POSITIVE DISPLACEMENT)
- METERING PUMP
- COMPRESSOR
- PROGRESSIVE CAVITY PUMP
- VERTICAL PUMP
- M — INLINE GRINDER
- CENTRIFUGAL PUMP
- PERISTALTIC PUMP
- MIXER

MISCELLANEOUS SYMBOLS

- FLEX COUPLING
- QUICK CONNECT
- BLIND FLANGE
- FLEXIBLE HOSE
- CALIBRATION CYLINDER
- PULSATION DAMPENER
- EXPANSION TANK
- HORN
- HORN/STROBE
- RUPTURE DISK
- V — VENT
- CONCENTRIC REDUCER
- DIAPHRAGM SEAL
- FULL LINE OR TAPPED RING SEAL
- D — DRAIN
- XXXX-YYYYY — EQUIPMENT OR PANEL TAG
- M — MOTOR
- CARTRIDGE FILTER
- AIR FILTER
- STATIC MIXER
- INJECTOR

IDENTIFICATION LETTERS

	FIRST LETTERS: MEASURED OR INITIATING VARIABLE	FIRST LETTERS: VARIABLE MODIFIER	SUCCEEDING LETTERS: READOUT/ PASSIVE FUNCTION	SUCCEEDING LETTERS: OUTPUT/ ACTIVE FUNCTION	SUCCEEDING LETTERS: FUNCTION MODIFIER
A	ANALYSIS		ALARM		
B	BURNER, COMBUSTION		USER'S CHOICE	USER'S CHOICE	USER'S CHOICE
C	CONDUCTIVITY			CONTROL	CLOSE
D	DENSITY (MASS) OR SPECIFIC	DIFFERENCE, DIFFERENTIAL			DEVIATION
E	GRAVITY VOLTAGE (EMF)		SENSOR, PRIMARY ELEMENT		
F	FLOW, FLOW RATE	RATIO			
G	USER'S CHOICE		GLASS, GAUGE, VIEWING DEVICE		
H	HAND				HIGH
I	CURRENT		INDICATE		
J	POWER		SCAN		
K	TIME, SCHEDULE	TIME RATE OF CHANGE		CONTROL STATION	
L	LEVEL		LIGHT		LOW
M	MOISTURE OR HUMIDITY	MOMENTARY			MIDDLE, INTERMEDIATE
N	TORQUE		USER'S CHOICE	USER'S CHOICE	USER'S CHOICE
O	USER'S CHOICE		ORIFICE, RESTRICTION		OPEN
P	PRESSURE		POINT (TEST CONNECTION)		
Q	QUANTITY	INTEGRATE, TOTALIZE	INTEGRATE, TOTALIZE		
R	RADIATION		RECORD		RUN
S	SPEED, FREQUENCY	SAFETY		SWITCH	STOP
T	TEMPERATURE			TRANSMIT	
U	MULTIVARIABLE		MULTIFUNCTION	MULTIFUNCTION	
V	VIBRATION, MECHANICAL ANALYSIS			VALVE, DAMPER, LOUVER	
W	WEIGHT, FORCE		WELL PROBE		
X	UNCLASSIFIED	X-AXIS	ACCESSORY DEVICES, UNCLASSIFIED	UNCLASSIFIED	UNCLASSIFIED
Y	EVENT, STATE, PRESENCE	Y-AXIS		AUXILIARY DEVICES	
Z	POSITION, DIMENSION	Z-AXIS, SAFETY INSTRUMENTED SYSTEM		DRIVER, ACTUATOR, UNCLASSIFIED FINAL CONTROL ELEMENT	

PRIMARY ELEMENT SYMBOLS

- M — MAGNETIC FLOW METER
- SONIC FLOW METER
- ΔT — THERMAL MASS FLOW METER
- TURBINE OR PROPELLER FLOW METER
- VENTURI FLOW METER
- AVERAGING PITOT TUBE
- PADDLE WHEEL FLOW METER
- VORTEX FLOW METER
- POSITIVE DISPLACEMENT FLOW METER
- PARSHALL FLUME
- WEIR
- ORIFICE PLATE
- FICV — ROTAMETER WITH INTEGRAL VALVE
- ABCD TT 1234 — TT: RF=ADMITTANCE/CAPACITANCE MAN=MANOMETER
- SUBMERSIBLE LEVEL SENSOR
- ULTRASONIC LEVEL SENSOR
- NON-CONTACT RADAR LEVEL SENSOR
- GUIDED WAVE RADAR LEVEL SENSOR
- FLOAT LEVEL SWITCH
- CAPACITANCE LEVEL SENSOR

ANALYTICAL ABBREVIATIONS

AXX 12345 (ZZZ) — ANALYSIS INSTRUMENT

(ZZZ) =

ALK	ALKALINITY	O2	OXYGEN
CH4	METHANE	O3	OZONE
CL2	CHLORINE	ORP	OXIDATION/REDUCTION POTENTIAL
COMB	COMBUSTIBLE GAS	PETRO	PETROLEUM VAPOR
CON	CONDUCTIVITY	PH	HYDROGEN ION CONCENTRATION
DO	DISSOLVED OXYGEN	PO4	PHOSPHATE
IR	INFRARED	SO2	SULFUR DIOXIDE
H2S	HYDROGEN SULFIDE	TH	TOTAL HARDNESS
LEL	LOWER EXPLOSIVE LIMIT	TSS	TOTAL SUSPENDED SOLIDS
METH	METHANOL VAPOR	TURB	TURBIDITY
NH3	AMMONIA	UV	ULTRAVIOLET
NO3	NITRATE		

MISCELLANEOUS ABBREVIATIONS

GENERAL NOTES

1. SYMBOLS AND NOMENCLATURE ARE BASED ON ANSI/ISA–5.1–2009.
2. REFER TO LEGEND SHEETS OF OTHER DISCIPLINES FOR ADDITIONAL SYMBOLS AND ABBREVIATIONS.
3. REFER TO SPECIFICATIONS FOR ADDITIONAL DETAIL ON CONTROL SYSTEM FUNCTIONAL REQUIREMENTS.
4. INSTRUMENTS AND PANELS DENOTED WITH AN ASTERISK (*) ARE PROVIDED BY OTHER DISCIPLINES. REFER TO THE DRAWINGS AND SPECIFICATIONS OF OTHER DISCIPLINES FOR ADDITIONAL DETAIL.
5. POWER SUPPLIES FOR LOOPS OR SYSTEMS SHALL BE FURNISHED BY THE INSTRUMENTATION SUPPLIER TO MEET THE PARTICULAR CHARACTERISTICS (E.G., VOLTAGE AND CURRENT REQUIREMENTS) OF COMPONENTS IN EACH LOOP OR SYSTEM.

LINE SYMBOLS AND LEGEND

- MAJOR PROCESS PIPES OR CHANNELS
- SECONDARY PROCESS OR MECHANICAL CONNECTION
- AIR SUPPLY OR SIGNAL
- ELECTRICAL SIGNAL/ COPPER CABLE
- DATA LINK OR INTERNAL SOFTWARE LINK
- FO — FIBER OPTIC CABLE
- C6 — CAT6 CABLE
- TAG / DRAWING — OFF-SHEET CONNECTOR
- DISCRETE ELECTRICAL SIGNALS
- DISCRETE DIGITAL SIGNALS
- ANALOG ELECTRICAL SIGNALS
- ANALOG DIGITAL SIGNALS
- R4 — RS485/MODBUS CABLE
- PROCESS/SIGNALS NOT CONNECTED (CROSSING)
- PROCESS/SIGNALS CONNECTED
- EXISTING EQUIPMENT LINE TYPE
- NEW EQUIPMENT LINE TYPE

REV	ISSUED FOR	DATE	BY

PROJECT ENGINEER:	J. PETERY
DESIGNED BY:	V. DOBSON
DRAWN BY:	V. DOBSON
CHECKED BY:	R. SHERMAN

IF THIS BAR DOES NOT MEASURE 1" THEN DRAWING IS NOT TO FULL SCALE (0 — 1/2" — 1")

PERMIT SET
DO NOT USE FOR CONSTRUCTION

COMMONWEALTH OF VIRGINIA — DANIEL B. EDWARDS — Lic. No.24960 — 04-21-2020 — PROFESSIONAL ENGINEER

Hazen

HAZEN AND SAWYER
1555 ROSENEATH ROAD
RICHMOND, VIRGINIA 23230

FREDERICK-WINCHESTER SERVICE AUTHORITY
WINCHESTER, VIRGINIA

OPEQUON WATER RECLAMATION FACILITY
FOG FACILITY UPGRADES

INSTRUMENTATION
LEGEND AND GENERAL
NOTES

DATE:	APRIL 2020
HAZEN NO.:	31439-003
CONTRACT NO.:	202008
DRAWING NUMBER:	I1

File: O:\31439-RIC\31439-003\ENGINEERING\DRAWINGS\INSTRUMENTATION\I1 Saved by VDOBSON Save date: 4/2/2020 4:35 PM
PLOT DATE: 4/15/2020 8:16 AM BY: KSUTTON

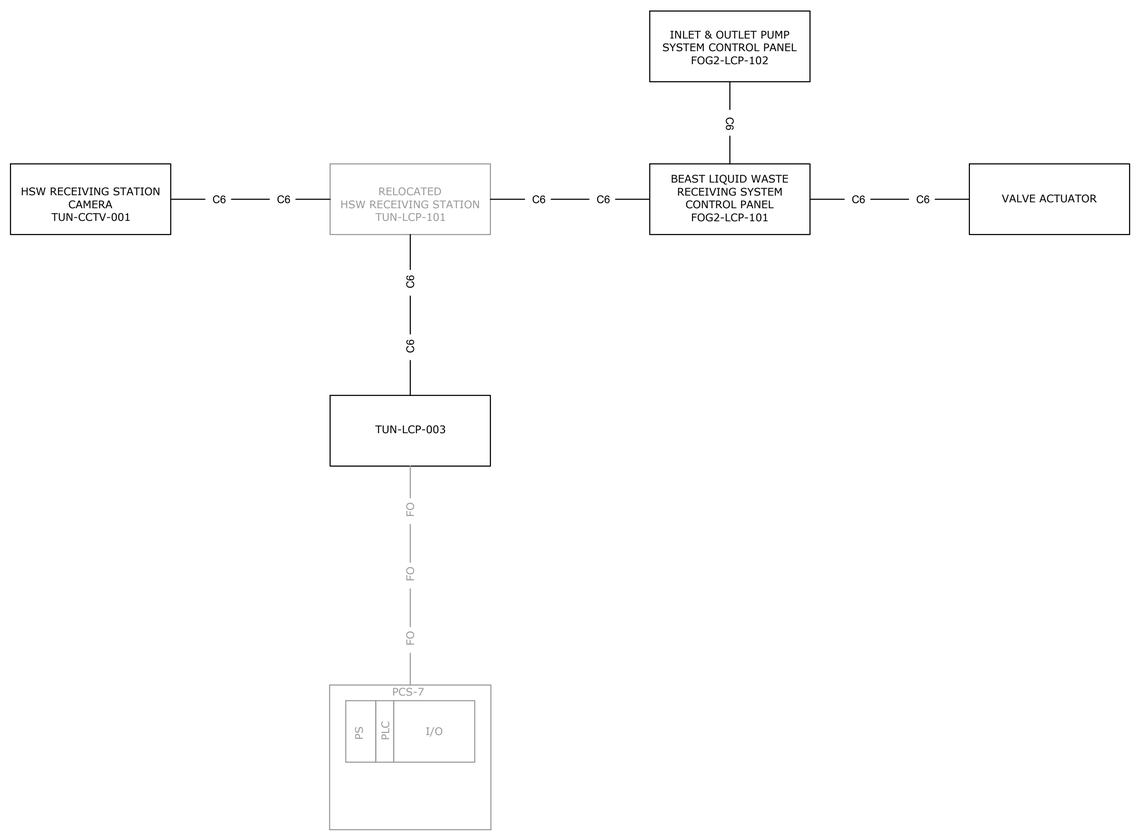

GENERAL NOTES:

KEY:

—FO—	FIBER
— C6 —	CAT 6 ETHERNET CABLE
— R4 —	RS 485/MODBUS CABLE

ABBREVIATIONS:

EN2T	- ETHERNET IP BRIDGE
EN2TR	- ETHERNET COMM MODULE
ENSW/X	- ETHERNET SWITCH X = S (SCADA SWITCH) = P (PLC SWITCH)
ETAP	- ALLEN BRADLEY E-TAP-1783 COMMUNICATION MODULE
FOC	- FIBER OPTIC CONVERTER
FOPP	- PATCH PANEL
HA	- HIGH AVAILABILITY
I/O	- INPUTS / OUTPUTS
MBT	- PROSOFT MODBUS TCP/IP TO ETHERNET/IP GATEWAY
MVE	- PROSOFT MV156E-MCM MODBUS COMMUNICATION MODULE
NAS	- NETWORK ATTACHED STORAGE
OIT	- OPERATOR INTERFACE TERMINAL
PLC	- PROGRAMMABLE LOGIC CONTROLLER
PS	- POWER SUPPLY
R/LAN	- RADIO W/ LAN CONNECTION
RM2	- REDUNDANCY MODULE
UPS	- UNINTERRUPTIBLE POWER SUPPLY

REV	ISSUED FOR	DATE	BY

PROJECT ENGINEER:	J. PETERY
DESIGNED BY:	V. DOBSON
DRAWN BY:	V. DOBSON
CHECKED BY:	R. SHERMAN
IF THIS BAR DOES NOT MEASURE 1" THEN DRAWING IS NOT TO FULL SCALE	0 1/2" 1"

PERMIT SET
DO NOT USE FOR CONSTRUCTION

COMMONWEALTH OF VIRGINIA
DANIEL B. EDWARDS
Lic. No.24960
04-21-2020
PROFESSIONAL ENGINEER

Hazen

HAZEN AND SAWYER
1555 ROSENEATH ROAD
RICHMOND, VIRGINIA 23230

FREDERICK-WINCHESTER SERVICE AUTHORITY
WINCHESTER, VIRGINIA

OPEQUON WATER RECLAMATION FACILITY
FOG FACILITY UPGRADES

INSTRUMENTATION
NETWORK ARCHITECTURE

DATE:	APRIL 2020
HAZEN NO.:	31439-003
CONTRACT NO.:	202008
DRAWING NUMBER:	I2

File: O:\31439-R\C31439-003\ENGINEERING\DRAWINGS\INSTRUMENTATION\I100 Saved by VDOBSON Save date: 4/2/2020 4:24 PM
PLOT DATE: 4/15/2020 8:16 AM BY: KSUTTON

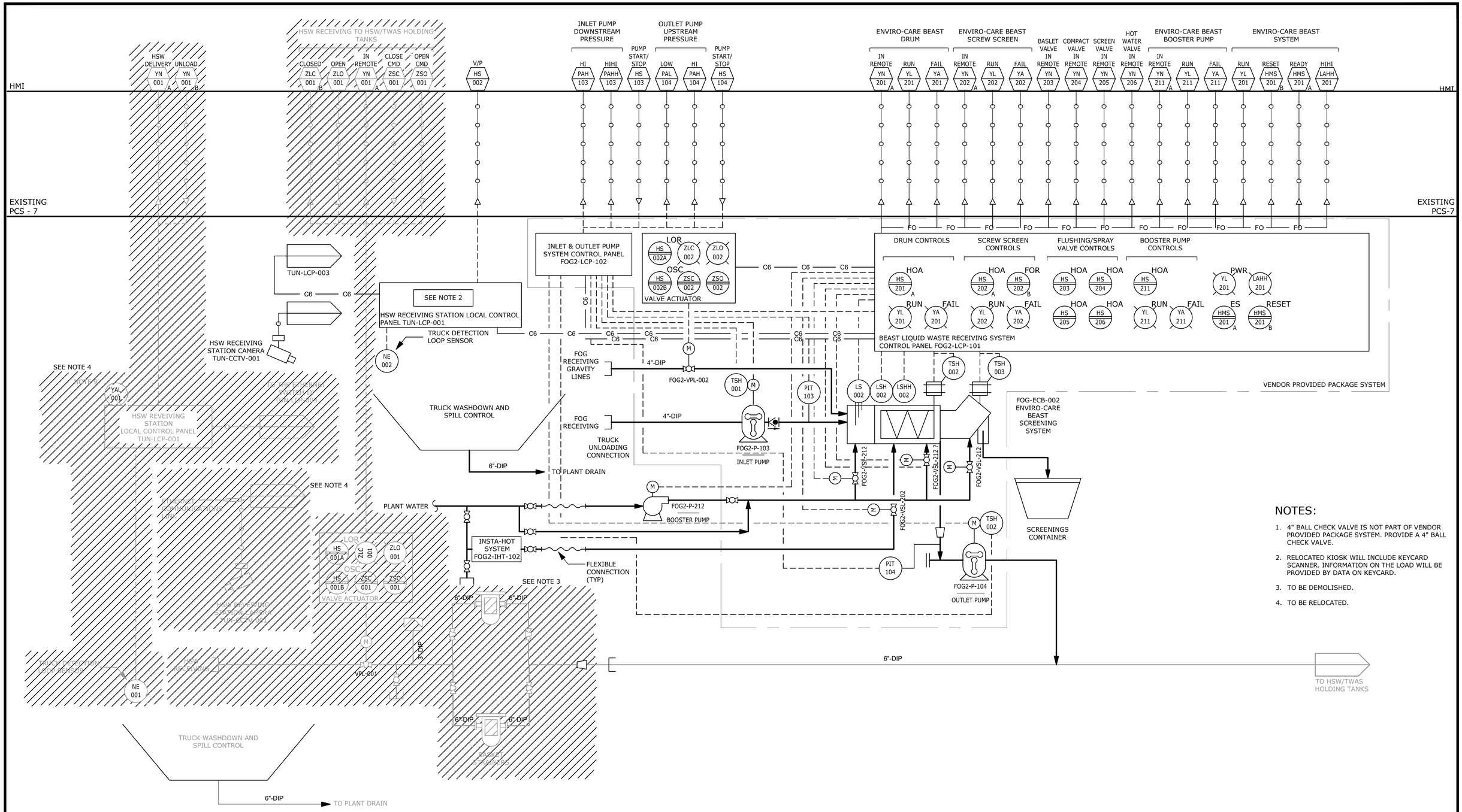

NOTES:

1. 4" BALL CHECK VALVE IS NOT PART OF VENDOR PROVIDED PACKAGE SYSTEM. PROVIDE A 4" BALL CHECK VALVE.
2. RELOCATED KIOSK WILL INCLUDE KEYCARD SCANNER. INFORMATION ON THE LOAD WILL BE PROVIDED BY DATA ON KEYCARD.
3. TO BE DEMOLISHED.
4. TO BE RELOCATED.

REV	ISSUED FOR	DATE	BY

PROJECT ENGINEER:	J. PETERY
DESIGNED BY:	V. DOBSON
DRAWN BY:	V. DOBSON
CHECKED BY:	R. SHERMAN
IF THIS BAR DOES NOT MEASURE 1" THEN DRAWING IS NOT TO FULL SCALE	0 1/2" 1"

PERMIT SET
DO NOT USE FOR CONSTRUCTION

COMMONWEALTH OF VIRGINIA
DANIEL B. EDWARDS
Lic. No.24960
04-21-2020
PROFESSIONAL ENGINEER

Hazen
HAZEN AND SAWYER
1555 ROSENEATH ROAD
RICHMOND, VIRGINIA 23230

FREDERICK-WINCHESTER SERVICE AUTHORITY
WINCHESTER, VIRGINIA

OPEQUON WATER RECLAMATION FACILITY
FOG FACILITY UPGRADES

INSTRUMENTATION
HSW AND FOG RECEIVING STATION No. 2 P&ID

DATE:	APRIL 2020
HAZEN NO.:	31439-003
CONTRACT NO.:	202008
DRAWING NUMBER:	I3

File: O:\31439-R\C\31439-003\ENGINEERING\DRAWINGS\INSTRUMENTATION\I101 TITLE Saved by VDOBSON Save date: 4/2/2020 4:32 PM
PLOT DATE: 4/15/2020 8:16 AM BY: KSUTTON

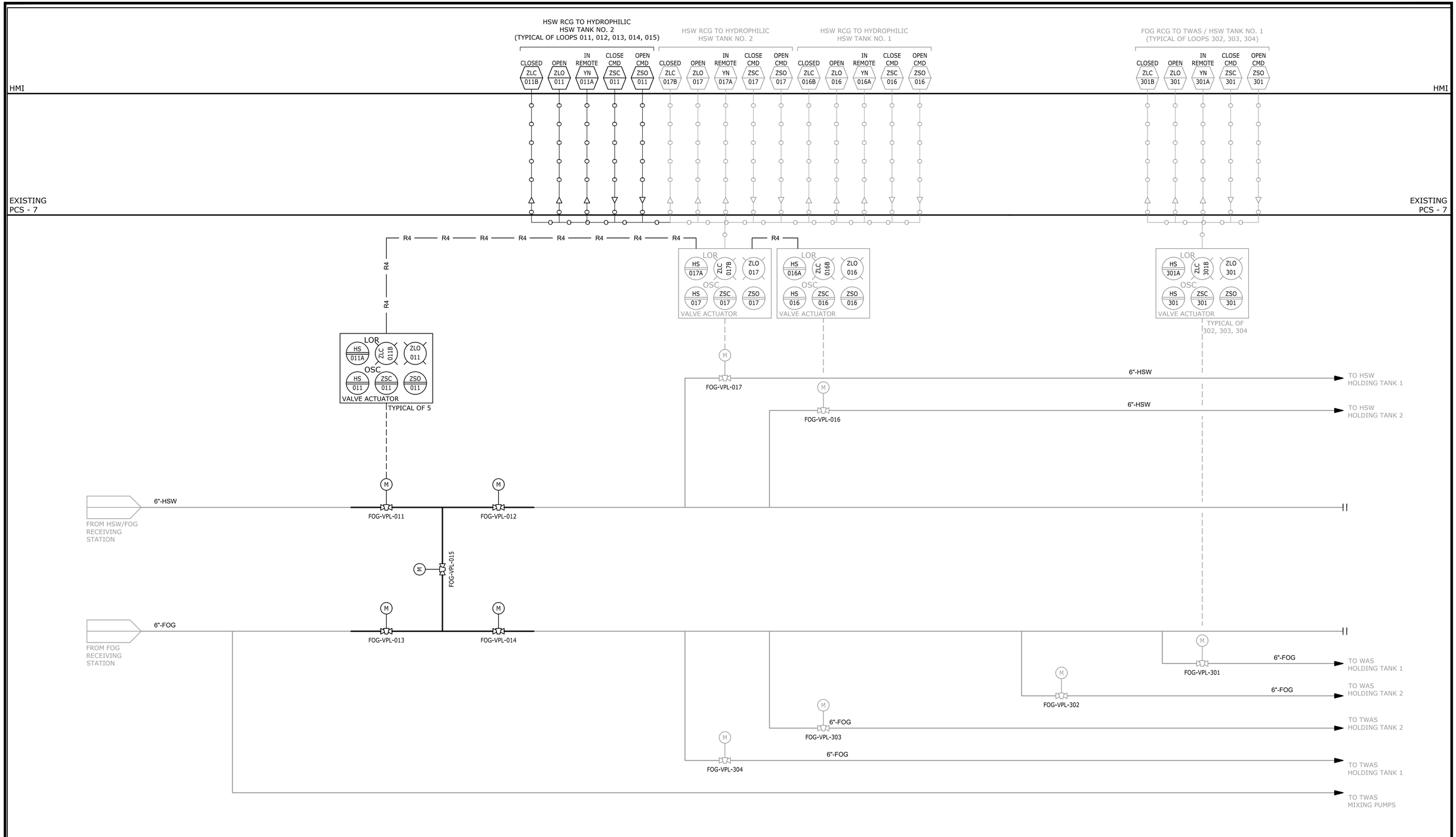

REV	ISSUED FOR	DATE	BY

PROJECT ENGINEER:	J. PETERY
DESIGNED BY:	V. DOBSON
DRAWN BY:	V. DOBSON
CHECKED BY:	R. SHERMAN
IF THIS BAR DOES NOT MEASURE 1" THEN DRAWING IS NOT TO FULL SCALE	0 1/2" 1"

PERMIT SET
DO NOT USE FOR CONSTRUCTION

COMMONWEALTH OF VIRGINIA
DANIEL B. EDWARDS
Lic. No. 24960
04-21-2020
PROFESSIONAL ENGINEER

Hazen

HAZEN AND SAWYER
1555 ROSENEATH ROAD
RICHMOND, VIRGINIA 23230

FREDERICK-WINCHESTER SERVICE AUTHORITY
WINCHESTER, VIRGINIA

OPEQUON WATER RECLAMATION FACILITY
FOG FACILITY UPGRADES

INSTRUMENTATION
FOG DISTRIBUTION P&ID

DATE:	APRIL 2020
HAZEN NO.:	31439-003
CONTRACT NO.:	202008
DRAWING NUMBER:	I4

File: O:\31439-RIC\31439-003\ENGINEERING\DRAWINGS\INSTRUMENTATION\I102 TITLE Saved by VDOBSON Save date: 4/2/2020 4:35 PM
PLOT DATE: 4/15/2020 8:17 AM BY: KSUTTON

LIGHTING:

X DENOTES FIXTURE TYPE (TYP.)
SEE SPECIFICATION 16500 FOR FIXTURE SCHEDULE
# DENOTES CIRCUIT NUMBER (TYP.)

RECTANGULAR FIXTURE

LEFT: CEILING MOUNTED FIXTURE
RIGHT: WALL MOUNTED FIXTURE

EMERGENCY WALL-MOUNTED FIXTURE:
LEFT: STANDARD
RIGHT: REMOTE-HEAD

LEFT: CEILING MOUNTED EXIT SIGN
RIGHT: WALL MOUNTED EXIT SIGN
SHADED PORTION DENOTES SIGN FACE

POLE-MOUNTED FIXTURE

PHOTOCELL

LEFT: CEILING MOUNTED OCCUPANCY SENSOR
RIGHT: WALL MOUNTED OCCUPANCY SENSOR
X DENOTES TYPE

RECEPTACLES:

X DENOTES RECEPTACLE TYPE (TYP.):
GFCI DENOTES GROUND FAULT CIRCUIT INTERRUPT
UPS DENOTES UNINTERRUPTIBLE POWER SUPPLY
WPCR DENOTES WEATHERPROOF CORROSION RESISTANT
# DENOTES CIRCUIT NUMBER (TYP.)

RECEPTACLES:
LEFT: SIMPLEX
MIDDLE: DUPLEX
RIGHT: QUADRUPLEX

MULTI-OUTLET RECEPTACLE:
LEFT: SIMPLEX
RIGHT: DUPLEX

OTHER RECEPTACLES:
LEFT: 240 VOLT
RIGHT: SPECIAL PURPOSE

HVAC AND FIRE ALARM

FIRE ALARM CONTROL PANEL

FIRE ALARM ANNUNCIATOR PANEL

FIRE ALARM PULL STATION

FIRE ALARM INDICATOR:
X DENOTES ALERT TYPE (TYP.):
A DENOTES AUDIBLE
V DENOTES VISIBLE (# DENOTES STROBE INTENSITY)

FIRE ALARM INDICATOR MOUNTED
ABOVE A FIRE ALARM PULL STATION

DUCT DETECTOR

SMOKE DETECTOR:
X DENOTES TYPE:
Z DENOTES IONIZATION
P DENOTES PHOTOELECTRIC
T DENOTES THERMAL

HEAT DETECTOR

THERMOSTAT

AMBIENT TEMPERATURE TRANSMITTER

SWITCHES

WALL SWITCH:
X DENOTES TYPE:
NO SUBSCRIPT DENOTES SINGLE-POLE SWITCH
3 DENOTES 3-WAY SWITCH
4 DENOTES 4-WAY SWITCH
M DENOTES MANUAL MOTOR STARTER
# DENOTES CIRCUIT NUMBER
WPCR DENOTES WEATHERPROOF CORROSION RESISTANT

COMBINATION MOTOR STARTER

DISCONNECT SWITCH

LOCAL CONTROL STATION

ELEMENTARY CONTROL SCHEMATICS

3-POSITION SELECTOR SWITCH:
HOA DENOTES HAND/OFF/AUTO
LOR DENOTES LOCAL/OFF/REMOTE
FOR DENOTES FORWARD/OFF/REVERSE

PUSHBUTTON SWITCHES:
LEFT: N.O.
RIGHT: N.C.
TEXT DENOTES LEGEND PLATE

EMERGENCY STOP MUSHROOM HEAD PUSHBUTTON SWITCH (N.C.):
TEXT DENOTES LEGEND PLATE

PUSHBUTTON SWITCH N.C. WITH LOCK-OUT:
TEXT DENOTES LEGEND PLATE

SELECTOR SWITCH:
LEFT: STANDARD
RIGHT: SPRING-RETURN
TEXT DENOTES LEGEND PLATE

SOLID-STATE OVERLOAD RELAY

THERMAL OVERLOAD RELAY

NOTATION LEGEND:
NO/NC: NORMALLY OPEN/CLOSED
RO/RC: RISE-TO-OPEN/CLOSE
FO/FC: FALL-TO-OPEN/CLOSE
TO/TC: TIME-OPEN/CLOSE

CONTACTS:
TEXT DENOTES COIL ID

SWITCHES:
TEXT DENOTES TAG NUMBER

INDICATOR LIGHT:
LEFT: STANDARD/RIGHT: PUSH-TO-TEST
X DENOTES COLOR

RUN TIME METER

SOLENOID VALVE

MOTOR PROTECTION RELAY

CONTROL POWER TRANSFORMER

MECHANICAL INTERLOCK CONNECTION

MOTOR SPACE HEATER

COIL:
X DENOTES TYPE:
M DENOTES MOTOR STARTER
CR DENOTES CONTROL RELAY
TD DENOTES TIME DELAY RELAY
TR DENOTES TIMER RANGE
TS DENOTES TIMER SETPOINT
PR DENOTES INTERPOSING PILOT RELAY
LC DENOTES LIGHTING CONTACTOR
Y DENOTES REFERENCE LINE NUMBER

EQUIPMENT/DEVICE LOCATION SYMBOLS

LOCATED IN MCC

LOCATED IN STAND-ALONE MOTOR STARTER/CONTROLLER

LOCATED IN FIELD

LOCATED AT PANEL:
X DENOTES PANEL ID:
L DENOTES LOCAL CONTROL STATION

SINGLE-LINE DIAGRAMS

TRANSFORMER

PROTECTIVE RELAY:
NUMBER DENOTES IEEE DEVICE FUNCTION

MOTOR AND TYPICAL ADDITIONAL DEVICES:
TSH: TEMPERATURE SWITCH
MSH: MOTOR SPACE HEATER
CF: COOLING FAN
TE: TEMPERATURE ELEMENT
ME: MOISTURE DETECTOR

INSTRUMENT TAG:
X DENOTES INSTRUMENT TYPE
Y DENOTES INSTRUMENT NUMBER
SEE DRAWING I1 FOR INSTRUMENT ABBREVIATIONS

FUSE

FUSED DISCONNECT SWITCH

DISCONNECT SWITCH

FUSED DISCONNECT SWITCH

LOW VOLTAGE POWER CIRCUIT BREAKER:
LEFT: FIXED-MOUNT
RIGHT: DRAWOUT
E.O. DENOTES ELECTRICALLY OPERATED
LSIG DENOTES INSTALLED TRIP FUNCTIONS:
L DENOTES LONG-TIME
S DENOTES SHORT-TIME
I DENOTES INSTANTANEOUS
G DENOTES GROUND FAULT
Z DENOTES ZONE-SELECTIVE INTERLOCKING
CTR DENOTES BREAKER-SPECIFIC CT AND RATIOS

MEDIUM VOLTAGE DRAWOUT POWER CIRCUIT BREAKER:
E.O. DENOTES ELECTRICALLY OPERATED
BATT. DENOTES BATTERY BACKUP POWER

LOW VOLTAGE MOLDED CASE CIRCUIT BREAKER
LEFT: THERMAL-MAGNETIC TRIP UNIT
RIGHT: ELECTRONIC TRIP UNIT

MOTOR CIRCUIT PROTECTOR

GROUND

CT:
NUMBERS DENOTE CT WINDING RATIO AND CT QUANTITY

GFCT:
NUMBERS DENOTE GFCT WINDING RATIO AND GFCT QUANTITY

PT:
NUMBERS DENOTE PT WINDING VOLTAGES AND PT QUANTITY

DRAW-OUT ELEMENT

LEFT: PANELBOARD
RIGHT: COMBINATION POWER UNIT
X DENOTES PANEL ID

SURGE ARRESTOR

SINGLE-LINE DIAGRAMS, CONT'D.

LEFT: RESISTOR
RIGHT: LINE REACTOR
#% DENOTES IMPEDANCE

CAPACITOR

SHUNT TRIP

SURGE PROTECTIVE DEVICE

KIRK-KEY INTERLOCK

LEFT: FVNR STARTER:
X DENOTES NEMA SIZE
DP DENOTES DEFINITE PURPOSE CONTACTOR
RIGHT: FVR STARTER

LEFT: VFD
MIDDLE: VFD WITH HARMONIC FILTER
RIGHT: VFD WITH RVSS BYPASS

LEFT: RVSS
RIGHT: RVSS WITH FVNR BYPASS
X DENOTES NEMA SIZE

RVAT STARTER:
X DENOTES NEMA SIZE
#% DENOTES TAP SETTING

MEDIUM VOLTAGE VACUUM CONTACTOR
LEFT: FIXED
RIGHT: DRAWOUT

SINGLE-LINE DIAGRAMS, CONT'D.

GENERATOR

CONTACTOR-STYLE ATS OR MTS

CONTACTOR-STYLE ATS OR MTS WITH OFF POSITION

CONTACTOR-STYLE ATS OR MTS, SERVICE-ENTRANCE RATED

MCCB-STYLE ATS OR MTS

DRAWOUT CB-STYLE ATS OR MTS

MISC PLAN VIEW SYMBOLS

EQUIPMENT CONNECTION

GROUND RODS:
LEFT: BURIED
RIGHT: IN TESTWELL

DUCTBANK SECTION CUT IDENTIFIER:
DBXX DENOTES DUCTBANK ID
EXX DENOTES DRAWING NUMBER WHERE SECTION CUT IS LOCATED

DUCTBANK TAG:
X DENOTES DUCTBANK ID

CABLE TRAY TAG:
X DENOTES CABLE TRAY ID
Y DENOTES SCHEDULE REFERENCE

INSTRUMENT TAG:
X DENOTES INSTRUMENT TYPE
# DENOTES INSTRUMENT NUMBER
SEE DRAWING I1 FOR INSTRUMENT ABBREVIATIONS

CONDUIT TAGS:
P DENOTES POWER
C DENOTES CONTROL
I DENOTES INSTRUMENTATION
XXXX DENOTES CONDUIT ID
XXX-XXX DENOTES CONDUIT ID

COMMUNICATIONS

TELEPHONE OR NETWORK DROP

PAGER RECEPTACLE

HORN/LIGHT DEVICE

PA UNIT

WIRING

CONDUIT HOME RUN

CONDUIT EXPOSED

CONCRETE ENCASED CONDUIT

CONDUIT CONCEALED

FLEXIBLE CONDUIT

CONCRETE ENCASED DUCTBANK

LEFT: CONDUIT RISE (TURN UP)
RIGHT: CONDUIT DROP (TURN DOWN)

REV	ISSUED FOR	DATE	BY

PROJECT ENGINEER:	J. PETERY
DESIGNED BY:	E. FRANCOIS
DRAWN BY:	M. BROCATO
CHECKED BY:	E. FRANCOIS
IF THIS BAR DOES NOT MEASURE 1" THEN DRAWING IS NOT TO FULL SCALE	0 1/2" 1"

PERMIT SET
DO NOT USE FOR CONSTRUCTION

COMMONWEALTH OF VIRGINIA
EVERSLEY A. FRANCOIS
Lic. No. 57149
04-21-2020
PROFESSIONAL ENGINEER

Hazen
HAZEN AND SAWYER
1555 ROSENEATH ROAD
RICHMOND, VIRGINIA 23230

FREDERICK-WINCHESTER SERVICE AUTHORITY
WINCHESTER, VIRGINIA

OPEQUON WATER RECLAMATION FACILITY
FOG FACILITY UPGRADES

ELECTRICAL
LEGEND AND SYMBOLS

DATE:	APRIL 2020
HAZEN NO.:	31439-003
CONTRACT NO.:	202008
DRAWING NUMBER:	E1

File: O:\31439-RIC\31439-003\ENGINEERING\DRAWINGS\ELECTRICAL\E1 LEGEND AND SYMBOLS Saved by DWHITTAKER Save date: 4/6/2020 3:34 PM
PLOT DATE: 4/20/2020 11:17 AM BY: JLUZON

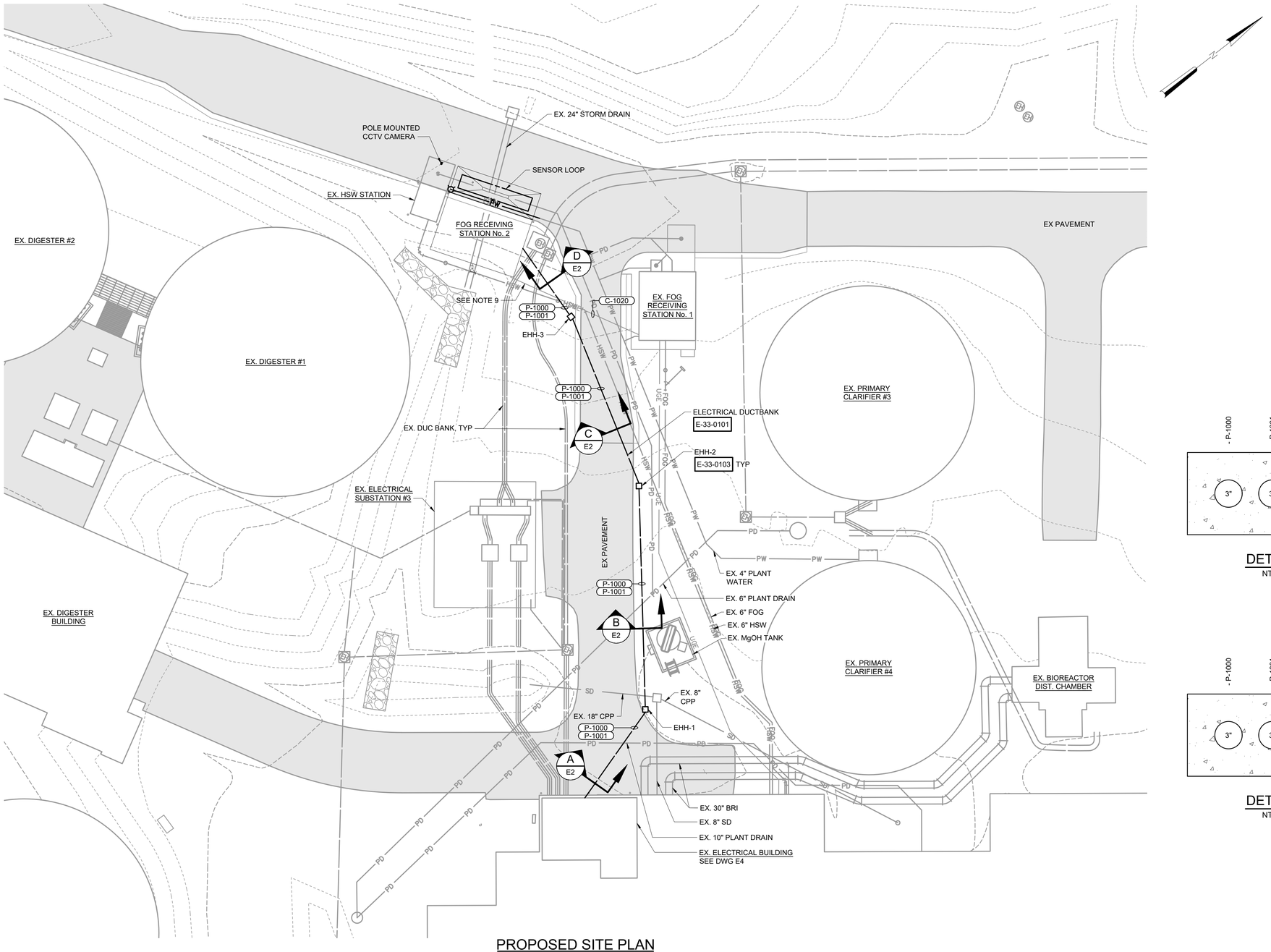

PROPOSED SITE PLAN
1" = 20'

NOTES:

1. UNLESS SPECIFICALLY NOTED OTHERWISE, ALL UNDERGROUND CONCRETE ENCASED ELECTRICAL CONDUITS SHALL BE PER STANDARD DETAIL E-33-0101.
2. THE INSTALLATION OF ALL CONCRETE ENCASED ELECTRICAL CONDUITS SHALL COMPLY WITH ACI 318, SECTION 6.3. CONTRACTOR SHALL SUPPLY EXPANSION JOINT FITTINGS AS REQUIRED FOR THERMAL EXPANSION AND DEFLECTION.
3. BOND ALL NEW CONCRETE ENCASED GROUND CONDUCTORS TO EXISTING GROUND CONDUCTORS IN ALL MANHOLES, PULL BOXES, CABLE TRAYS, AND SIMILAR LOCATIONS WHERE APPLICABLE.
4. UNLESS OTHERWISE SPECIFIED OR NOTED, ALL WALL MOUNTED ELECTRICAL PANELS, ENCLOSURES, AND SIMILAR EQUIPMENT SHALL BE MOUNTED 6'-6" (MAX) FROM THE TOP OF THE PANEL TO FINISHED FLOOR OR GRADE.
5. A SEPARATE EQUIPMENT GROUNDING CONDUCTOR SHALL BE PROVIDED FOR EACH CIRCUIT (SEPARATE CONDUCTOR IN THE CONDUIT). THE CONDUCTOR SHALL BE TERMINATED AT THE PROPER DEVICE, TERMINAL, OR LUG AT THE POWER SOURCE (MCC GROUND BUS, PANELBOARD GROUND BUS, ETC.). GROUND CONDUCTOR SIZE SHALL BE PER THE LATEST EDITION OF THE NEC.
6. REFERENCE SECTION 01520 FOR CONSTRUCTION SEQUENCING REQUIREMENTS.
7. CONDUIT HOMERUNS ARE NOT SHOWN ON THE DRAWINGS. CONTRACTOR SHALL REFER TO CONDUIT AND WIRE SCHEDULES, RISER DIAGRAMS, SINGLE LINE DIAGRAMS, AND OTHER DRAWINGS FOR CONDUIT AND WIRE REQUIREMENTS.
8. AFTER MOTOR OPERATED VALVES HAVE BEEN REMOVED AND THE KIOSK HAS BEEN RELOCATED TO FOG RECEIVING STATION NO.2, REMOVE THE UNDERGROUND DUCTBANK IN ITS ENTIRETY.
9. REMOVE EXISTING POWER CONDUCTORS FROM EXISTING UGE. REUSE UGE FOR NEW COMMUNICATION CABLES.

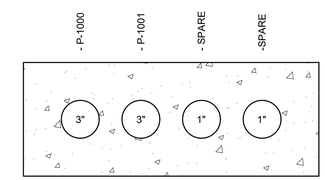

DETAIL A E2
NTS

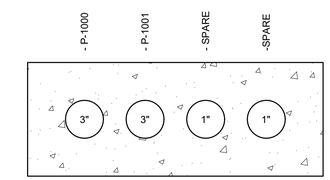

DETAIL B E2
NTS

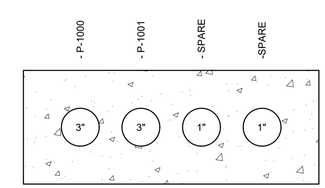

DETAIL C E2
NTS

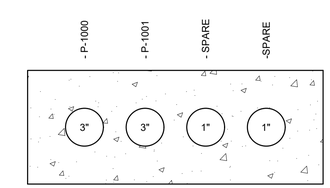

DETAIL D E2
NTS

1"=20'-0"
20 10 0 20'

REV	ISSUED FOR	DATE	BY

PROJECT ENGINEER:	J. PETERY
DESIGNED BY:	E. FRANCOIS
DRAWN BY:	M. BROCATO
CHECKED BY:	E. FRANCOIS

IF THIS BAR DOES NOT MEASURE 1" THEN DRAWING IS NOT TO FULL SCALE 0 1/2" 1"

PERMIT SET
DO NOT USE FOR CONSTRUCTION

COMMONWEALTH OF VIRGINIA
EVERSLEY A. FRANCOIS
Lic. No. 57149
04-21-2020
PROFESSIONAL ENGINEER

Hazen
HAZEN AND SAWYER
1555 ROSENEATH ROAD
RICHMOND, VIRGINIA 23230

FREDERICK-WINCHESTER SERVICE AUTHORITY
WINCHESTER, VIRGINIA

OPEQUON WATER RECLAMATION FACILITY
FOG FACILITY UPGRADES

ELECTRICAL
SITE PLAN

DATE:	APRIL 2020
HAZEN NO.:	31439-003
CONTRACT NO.:	202008
DRAWING NUMBER:	E2

File: O:\31439-R\C\31439-003\ENGINEERING\DRAWINGS\ELECTRICAL\E2 SITE PLAN Saved by DWHITTAKER Save date: 4/6/2020 3:35 PM
PLOT DATE: 4/20/2020 11:18 AM BY: JLUZON

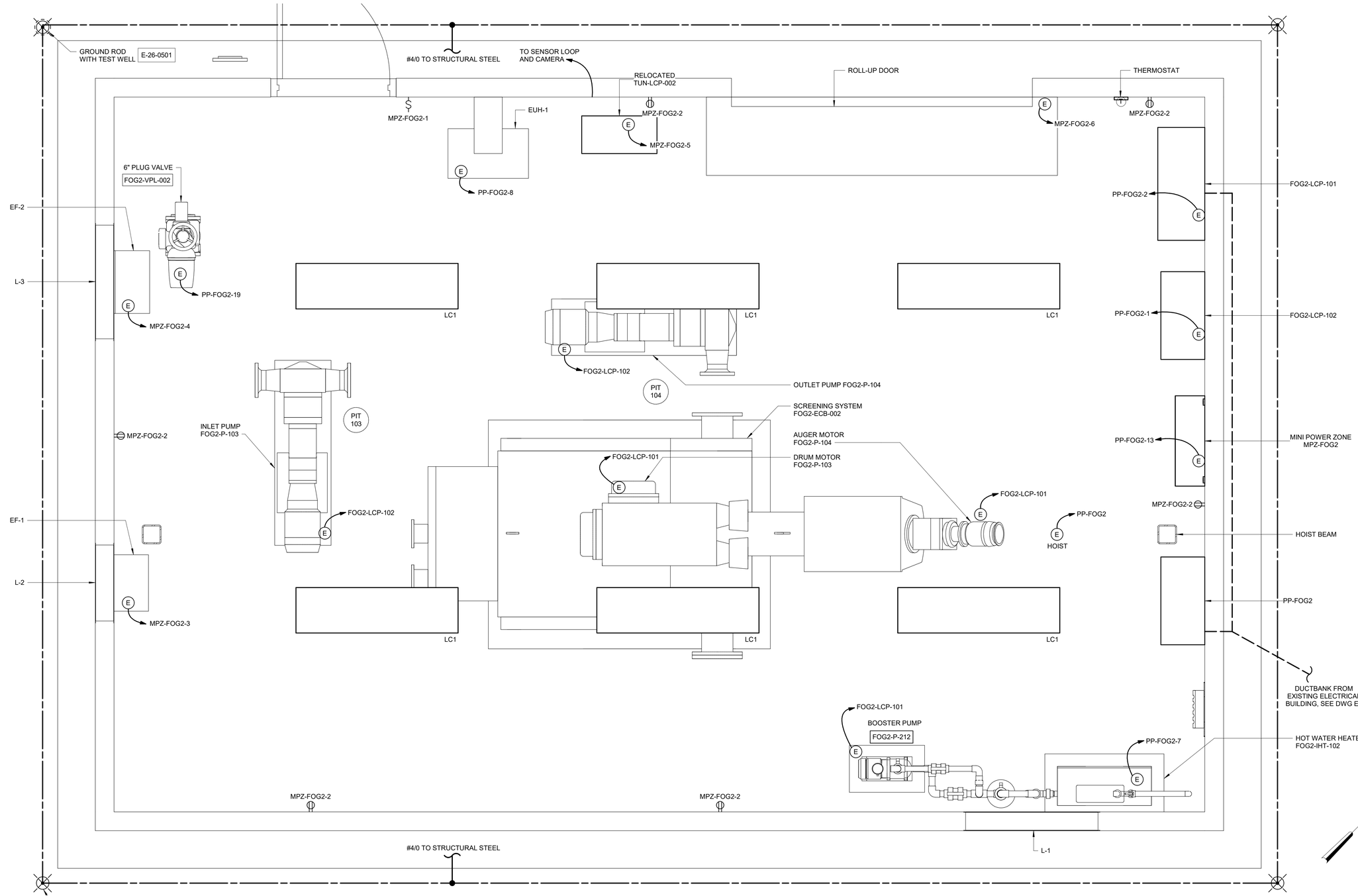

NOTES:

1. UNLESS OTHERWISE SPECIFIED OR NOTED, ALL WALL MOUNTED ELECTRICAL PANELS, ENCLOSURES, AND SIMILAR EQUIPMENT SHALL BE MOUNTED 6'-6" (MAX) FROM THE TOP OF THE PANEL TO FINISHED FLOOR OR GRADE.
2. A SEPARATE EQUIPMENT GROUNDING CONDUCTOR SHALL BE PROVIDED FOR EACH CIRCUIT (SEPARATE CONDUCTOR IN THE CONDUIT). THE CONDUCTOR SHALL BE TERMINATED AT THE PROPER DEVICE, TERMINAL, OR LUG AT THE POWER SOURCE (MCC GROUND BUS, PANELBOARD GROUND BUS, ETC.). GROUND CONDUCTOR SIZE SHALL BE PER THE LATEST EDITION OF THE NEC.
3. GROUND RING CONDUCTOR SHALL BE #4/0 BARE COPPER WIRE 30" MINIMUM BELOW FINISHED GRADE. ALL GROUND CONDUCTORS TO EQUIPMENT OR STUCTURAL STEEL SHALL BE #4/0 BARE COPPER WIRE.
4. CONDUIT HOMERUNS ARE NOT SHOWN ON THE DRAWINGS. CONTRACTOR SHALL REFER TO CONDUIT AND WIRE SCHEDULES, RISER DIAGRAMS, SINGLE LINE DIAGRAMS, AND OTHER DRAWINGS FOR CONDUIT AND WIRE REQUIREMENTS.
5. LIGHT SWITCH CONTROLS ALL LIGHTS IN THIS AREA.
6. COORDINATE LIGHT FIXTURE LOCATION WITH OBSTACLES IN THIS SPACE.
7. CONDUIT FROM FOG No. 1 FOR RELOCATED KIOSK TUN-LCP-002.

POWER AND LIGHTING PLAN

3/4" = 1'-0"

3/4" = 1'-0"

REV	ISSUED FOR	DATE	BY

PROJECT ENGINEER:	J. PETERY
DESIGNED BY:	E FRANCOIS
DRAWN BY:	M. BLICKENSTAFF
CHECKED BY:	E. FRANCOIS
IF THIS BAR DOES NOT MEASURE 1" THEN DRAWING IS NOT TO FULL SCALE	0 1/2" 1"

PERMIT SET
DO NOT USE FOR CONSTRUCTION

COMMONWEALTH OF VIRGINIA
EVERSLEY A. FRANCOIS
Lic. No. 57149
04-21-2020
PROFESSIONAL ENGINEER

Hazen

HAZEN AND SAWYER
1555 ROSENEATH ROAD
RICHMOND, VIRGINIA 23230

FREDERICK-WINCHESTER SERVICE AUTHORITY
WINCHESTER, VIRGINIA

OPEQUON WATER RECLAMATION FACILITY
FOG FACILITY UPGRADES

FOG RECEIVING STATION NO. 2
ELECTRICAL
POWER AND LIGHTING PLANS

DATE:	APRIL 2020
HAZEN NO.:	31439-003
CONTRACT NO.:	202008
DRAWING NUMBER:	E3

C:\Users\juzon\Documents\31439-003-100-SS-ELEC_JuzonJTDTX.rvt
4/17/2020 3:45:33 PM

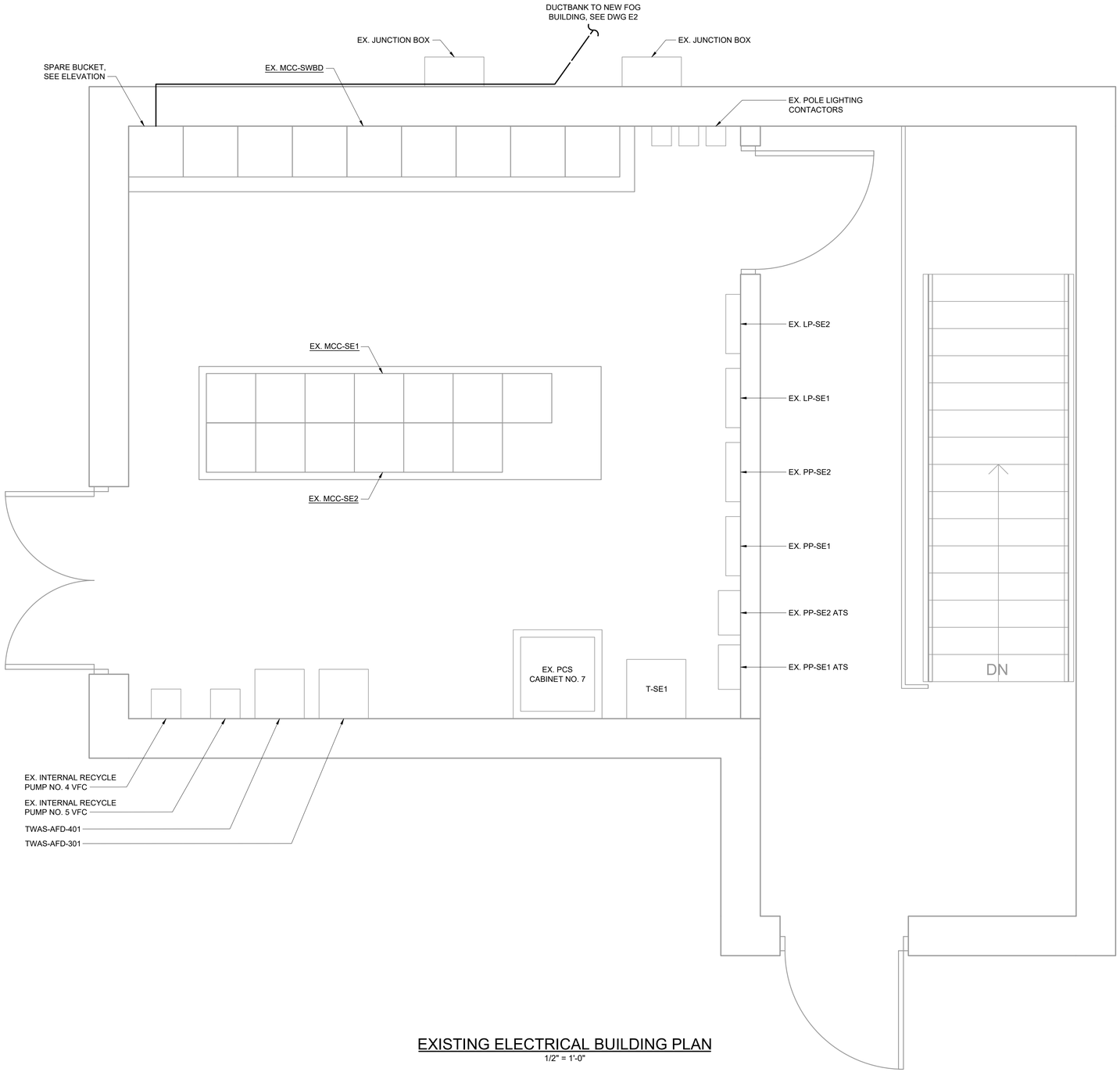

EXISTING ELECTRICAL BUILDING PLAN
1/2" = 1'-0"

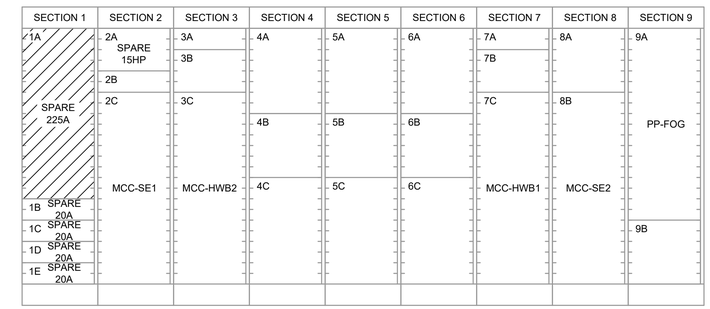

EXISTING MCC-SWBD ELEVATION DEMOLITION
NTS

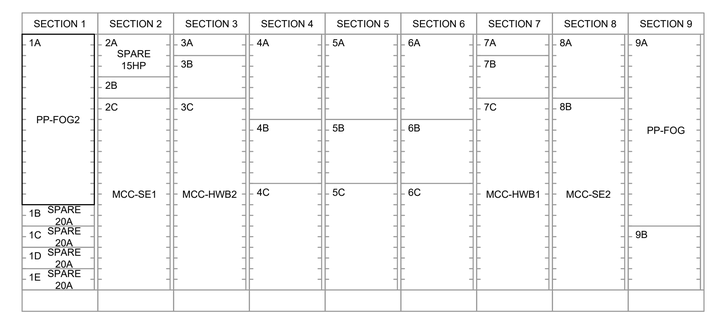

MODIFIED MCC-SWBD ELEVATION
NTS

1/2"=1'-0"

12" 0 1 3'

REV	ISSUED FOR	DATE	BY

PROJECT ENGINEER:	J. PETERY
DESIGNED BY:	E. FRANCOIS
DRAWN BY:	M. BROCATO
CHECKED BY:	E. FRANCOIS
IF THIS BAR DOES NOT MEASURE 1" THEN DRAWING IS NOT TO FULL SCALE	0 1/2" 1"

PERMIT SET
DO NOT USE FOR CONSTRUCTION

COMMONWEALTH OF VIRGINIA
EVERSLEY A. FRANCOIS
Lic. No. 57149
04-21-2020
PROFESSIONAL ENGINEER

Hazen

HAZEN AND SAWYER
1555 ROSENEATH ROAD
RICHMOND, VIRGINIA 23230

FREDERICK-WINCHESTER SERVICE AUTHORITY
WINCHESTER, VIRGINIA

OPEQUON WATER RECLAMATION FACILITY
FOG FACILITY UPGRADES

ELECTRICAL
EXISTING ELECTRICAL BUILDING PLAN
AND ELEVATIONS

DATE:	APRIL 2020
HAZEN NO.:	31439-003
CONTRACT NO.:	202008
DRAWING NUMBER:	E4

File: O:\31439-RIC\31439-003\ENGINEERING\DRAWINGS\ELECTRICAL\E4 EXISTING ELECTRICAL BUILDING PLAN Saved by DWHITTAKER Save date: 4/6/2020 3:36 PM
PLOT DATE: 4/20/2020 11:19 AM BY: JLUZON

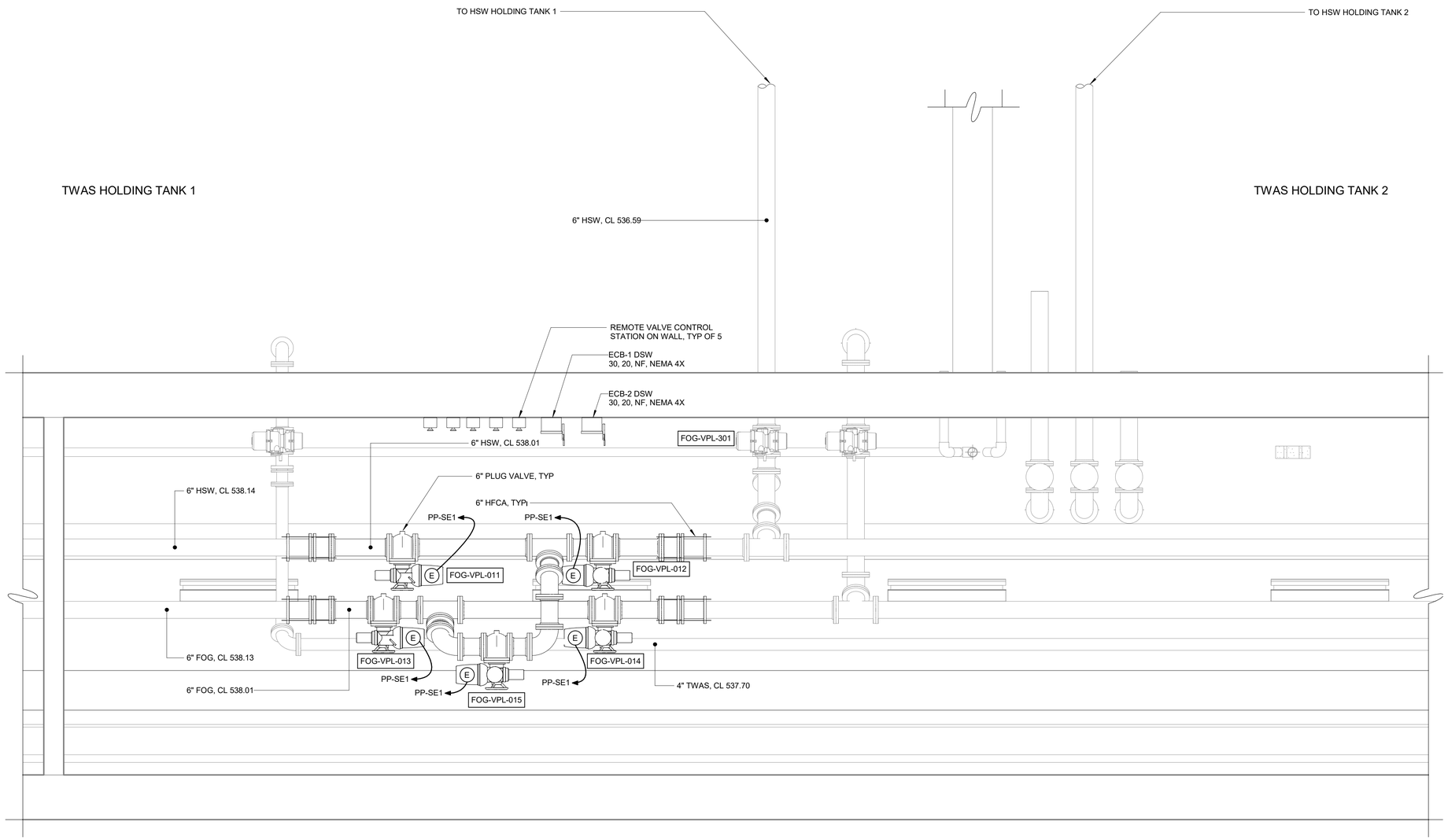

POWER PLAN

1/2" = 1'-0"

1/4" = 1'-0"

1 0 1 2 3 7'

REV	ISSUED FOR	DATE	BY

PROJECT ENGINEER:	J. PETERY
DESIGNED BY:	E. BRANCOIS
DRAWN BY:	M. BROCATO
CHECKED BY:	E. FRANCOIS
IF THIS BAR DOES NOT MEASURE 1" THEN DRAWING IS NOT TO FULL SCALE	0 1/2" 1"

PERMIT SET
DO NOT USE FOR CONSTRUCTION

COMMONWEALTH OF VIRGINIA
EVERSLEY A. FRANCOIS
Lic. No. 57149
04-21-2020
PROFESSIONAL ENGINEER

Hazen

HAZEN AND SAWYER
1555 ROSENEATH ROAD
RICHMOND, VIRGINIA 23230

FREDERICK-WINCHESTER SERVICE AUTHORITY
WINCHESTER, VIRGINIA

OPEQUON WATER RECLAMATION FACILITY
FOG FACILITY UPGRADES

FOG DISTRIBUTION
ELECTRICAL
POWER PLAN

DATE:	APRIL 2020
HAZEN NO.:	31439-003
CONTRACT NO.:	201455
DRAWING NUMBER:	E5

C:\Users\mbrocato\Documents\31439-003-300-SHTPG-ELEC_mbrocato\TWZGE.rvt
4/6/2020 4:14:59 PM

CONDUIT ID	SIZE	FROM	TO	CONDUCTORS	REMARKS
P-1000	3"	MCC-SWBD	PP-FOG2	4-350kcmil, #1 GND	
P-1001	3"	MCC-SWBD	PP-FOG2	4-350kcmil, #1 GND	
P-1002	2"	PP-FOG2	144KW HOT WATER HEATER FOG2-IHT-102	3#4/0, #4 GND	
P-1003	3/4"	PP-FOG2	UNIT HEATER UH-501	3#8, #10 GND	
P-1004	3/4"	PP-FOG2	MINI POWER ZONE MPZ-FOG2	3#10, #10 GND	
P-1005	3/4"	PP-FOG2	FOG-VPL-002 SAFETY SWITCH	3#12, #12 GND	
P-1006	3/4"	FOG-VPL-002 SAFETY SWITCH	FOG-VPL-002	3#12, #12 GND	
P-1007	3/4"	PP-FOG2	FOG2-LCP-102	3#8, #10 GND	
P-1008	3/4"	FOG2-LCP-102	INLET PUMP MOTOR FOG2-P-101	3#10, #10 GND	
P-1009	3/4"	FOG2-LCP-102	OUTLET PUMP MOTOR FOG2-P-102	3#10, #10 GND	
P-1010	3/4"	PP-FOG2	FOG2-LCP-101	3#12, #12 GND	
P-1011	3/4"	FOG2-LCP-101	DRUM DRIVE MOTOR FOG2-P-103	3#12, #12 GND	
P-1012	3/4"	FOG2-LCP-101	AUGER DRIVE MOTOR FOG2-P-104	3#12, #12 GND	
P-1013	3/4"	FOG2-LCP-101	BOOSTER PUMP FOG2-P-212	3#12, #12 GND	
P-1014	3/4"	MCC-SE1	FOG-VPL-011, FOG-VPL-012	3#10, 1#10GND	STARTER INTEGRAL TO MOV VIA ECB-1
P-1015	3/4"	MCC-SE1	FOG-VPL-013, FOG-VPL-014, FOG-VPL-015	3#10, 1#10GND	STARTER INTEGRAL TO MOV VIA ECB-2
P-1016	3/4"	PP-FOG2	HOIST	3#12, #12 GND	
P-1017	3/4"	PP-FOG2	GRINDER (FUTURE)	3#12, #12 GND	

CONDUIT NO.	SIZE	FROM	TO	CONDUCTORS	REMARKS
C-1000	3/4"	I/O PUMP SYSTEM CONTROL PANEL (FOG2-LCP-102)	INLET PUMP HIGHT TEMP SWITCH (TSH-001)	2#14, 1#14 GND	
C-1001	3/4"	I/O PUMP SYSTEM CONTROL PANEL (FOG2-LCP-102)	OUTLET PUMP HIGHT TEMP SWITCH (TSH-002)	2#14, 1#14 GND	
C-1002	3/4"	I/O PUMP SYSTEM CONTROL PANEL (FOG2-LCP-102)	INFLUENT PRESSURE TRANSDUCER	2#14, SHEILDED CABLE	
C-1003	3/4"	I/O PUMP SYSTEM CONTROL PANEL (FOG2-LCP-102)	EFFLUENT PRESSURE TRANSDUCER	2#14, SHEILDED CABLE	
C-1004	3/4"	I/O PUMP SYSTEM CONTROL PANEL (FOG2-LCP-102)	LOCAL CONTROL STATION (LCS1)	6#14, #14 GND	
C-1005	3/4"	I/O PUMP SYSTEM CONTROL PANEL (FOG2-LCP-102)	REMOTE INDICATIONS	8#14, #14 GND	
C-1006	1"	I/O PUMP SYSTEM CONTROL PANEL (FOG2-LCP-102)	BEAST CONTROL PANEL	CAT6	
C-1007	3/4"	BEAST SYSTEM CONTROL PANEL (FOG2-LCP-101)	DRUM DRIVE MOTOR (FOG2-P-103) HIGH TEMP (TSH-001)	2#14, #14GND	
C-1008	3/4"	BEAST SYSTEM CONTROL PANEL (FOG2-LCP-101)	AUGER DRIVE MOTOR (FOG2-P-104) HIGH TEMP (TSH-002)	2#14, #14GND	
C-1009	3/4"	BEAST SYSTEM CONTROL PANEL (FOG2-LCP-101)	BOOSTER PUMP (FOG2-P-212)	2#14, #14GND	
C-1010	3/4"	BEAST SYSTEM CONTROL PANEL (FOG2-LCP-101)	BASKET SPRAY WASH MOV	3#14, #14 GND	
C-1011	3/4"	BEAST SYSTEM CONTROL PANEL (FOG2-LCP-101)	SCREENING FLUSH VALVE MOV	3#14, #14 GND	
C-1012	3/4"	BEAST SYSTEM CONTROL PANEL (FOG2-LCP-101)	COMPACTION ZONE SPRAY SOLENOID VALVE	2#14, #14 GND	
C-1013	3/4"	BEAST SYSTEM CONTROL PANEL (FOG2-LCP-101)	HOT WATER SOLENOID VALVE	2#14, #14 GND	
C-1014	3/4"	BEAST SYSTEM CONTROL PANEL (FOG2-LCP-101)	INLET VALVE CONTROL ACTUATOR	6#14, #14 GND	
C-1015	3/4"	BEAST SYSTEM CONTROL PANEL (FOG2-LCP-101)	LOCAL CONTROL STATION (LCS-1)	5#14, #14 GND	
C-1016	1"	BEAST SYSTEM CONTROL PANEL (FOG2-LCP-101)	REMOTE INDICATIONS	16#14, #14 GND	
C-1017	1"	BEAST SYSTEM CONTROL PANEL (FOG2-LCP-101)	TUN-LCP-001	CAT6	
C-1018	1"	FOG2-VPL-002	FOG2-LCP-101	CAT6	
C-1019	1"	FOG-VPL-011, FOG-VPL-012, FOG-VPL-013, FOG-VPL-014, FOG-VPL-015	TUN-LCP-001	MODBUS	
C-1020		TUN-LCP-001	TUN-LCP-003	CAT6	

480/277 VOLTS
3 PHASE, 4 WIRE

PP-FOG2
MAIN BREAKER
600A 3P

TYPE: NEMA 1
MOUNT: SURFACE

MODS	DESCRIPTION	WIRE	TRIP	POLE	CKT No.	VOLT-AMPERES A	VOLT-AMPERES B	VOLT-AMPERES C	VOLT-AMPERES A	VOLT-AMPERES B	VOLT-AMPERES C	CKT No.	POLE	TRIP	WIRE	DESCRIPTION	MODS
-	I/O PUMP CONTROL PANEL FOG2-LCP-102	P-1007	50	3	1	7,754			3,877			2	3	20	P-1008	BEAST RECEIVING SYSTEM CONTROL PANEL (FOG2-LCP-101)	-
					3		7,754			3,877		4					
					5			7,754			3,877	6					
-	HOT WATER HEATER FOG2-IHT-102	P-1002	225	3	7	144,000			5,000			8	3	30	P-1003	UNIT HEATER UH-501	-
					9		144,000			5,000		10					
					11			144,000			5,000	12					
-	MINI POWER ZONE MPZ-FOG2	P-1004	30	3	13	1,860			304			14	3	15	P-1016	HOIST	-
					15		1,836			304		16					
					17			2,000			304	18					
-	MOTOR OPERATED VALVE FOG2-VPL-025	P-1006	15	3	19	120						20	3	15	P-1017	GRINDER (FUTURE)	-
					21		120					22					
					23			120				24					
-	SPARE		20	3	25							26	3	20		SPARE	-
					27							28					
					29							30					
-	SPACE				31	-			-			32				SPACE	-
					33		-			-		34					
					35			-			-	36					
-	SPACE				37	-			-			38				SPACE	-
					39		-			-		40					
					41			-			-	42					
				TOTAL		153,734	153,710	153,874	9,181	9,181	9,181	TOTAL					
						PHASE TOTAL			TOTAL LOAD (VA)								
						162,915	162,891	163,055	488,861								
									TOTAL LOAD (A)								
									588								

MODIFICATION (MODS) LEGEND:
EPD - GROUND FAULT CIRCUIT INTERRUPTER (30mA)
GFCI - GROUND FAULT CIRCUIT INTERRUPTER (5mA)
LOD - LOCK-ON DEVICE
LFD - LOCK-OFF DEVICE
ETU - ELECTRONIC TRIP UNIT

NOTES:
65kAIC

480/277 VOLTS
3 PHASE, 4 WIRE

EXISTING PP-SE1
MAIN BREAKER
225A 3P

TYPE: NEMA 1
MOUNT: SURFACE

MODS	DESCRIPTION	WIRE	TRIP	POLE	CKT No.	VOLT-AMPERES A	VOLT-AMPERES B	VOLT-AMPERES C	VOLT-AMPERES A	VOLT-AMPERES B	VOLT-AMPERES C	CKT No.	POLE	TRIP	WIRE	DESCRIPTION	MODS
-	MOTOR OPERATED PINCH VALVE FCV-533-1		20	3	1	-			-			2	3	20		MOTOR OPERATED PINCH VALVE FCV-533-4	-
					3		-			-		4					
					5			-			-	6					
-	MOTOR OPERATED PINCH VALVE FCV-533-2		20	3	7	-			-			8	3	20		MOTOR OPERATED PINCH VALVE FCV-533-5	-
					9		-			-		10					
					11			-			-	12					
-	MOTOR OPERATED VALVE FOG-VPL-011, FOG-VPL-012		20	3	13	-			-			14	3	20		SPARE	-
					15		-			-		16					
					17			-			-	18					
-	MOTOR OPERATED VALVE FOG-VPL-013, FOG-VPL-014, FOG-VPL-015		20	3	19	-			-			20	3	20		EXHAUST FAN EF-SER-2	-
					21		-			-		22					
					23			-			-	24					
-	ELECTRICA UNIT HEATER EUH-SER-1		30	3	25	-			-			26	3	80		AHU-SER-1 HEAT CONTROLLER	-
					27		-			-		28					
					29			-			-	30					
-	BIOREACTOR 4 & 5 POLE LIGHTS		20	1	31	-			-			32	1	20		SPARE	-
-	SPARE		20	1	33		-			-		34	1	20		SPARE	-
-	SPARE		20	1	35			-			-	36	1	20		SPARE	-
-	SPARE		20	3	37	-			-			38	3	50		TRANSFORMER T-SE1	-
					39		-			-		40					
					41			-			-	42					
				TOTAL		0	0	0	0	0	0	TOTAL					
						PHASE TOTAL			TOTAL LOAD (VA)								
						0	0	0	0								
									TOTAL LOAD (A)								
									0								

MODIFICATION (MODS) LEGEND:
EPD - GROUND FAULT CIRCUIT INTERRUPTER (30mA)
GFCI - GROUND FAULT CIRCUIT INTERRUPTER (5mA)
LOD - LOCK-ON DEVICE
LFD - LOCK-OFF DEVICE
ETU - ELECTRONIC TRIP UNIT

NOTES:
22kAIC

208/120 VOLTS
3 PHASE, 4 WIRE

MPZ-FOG2
MAIN BREAKER
60A 3P

TYPE: NEMA 1
MOUNT: SURFACE

MODS	DESCRIPTION	WIRE	TRIP	POLE	CKT No.	VOLT-AMPERES A	VOLT-AMPERES B	VOLT-AMPERES C	VOLT-AMPERES A	VOLT-AMPERES B	VOLT-AMPERES C	CKT No.	POLE	TRIP	WIRE	DESCRIPTION	MODS
-	LIGHTING	12	20	1	1	780			1,080			2	1	20	12	RECEPTACLES	-
-	EXHAUST FANS EF-1	12	20	1	3		660			1,176		4	1	20	12	EXHAUST FAN EF-2	-
-	KIOSK TUN-LCP-002	12	20	1	5			500			1,500	6	1	20	12	ROLL-UP DOOR	-
-	SPACE				7	-			-			8				SPACE	-
-	SPACE				9		-			-		10				SPACE	-
-	SPACE				11			-			-	12				SPACE	-
-	SPACE				13	-			-			14				SPACE	-
				TOTAL		780	660	500	1,080	1,176	1,500	TOTAL					
						PHASE TOTAL			TOTAL LOAD (VA)								
						1,860	1,836	2,000	5,696								
									TOTAL LOAD (A)								
									16								

MODIFICATION (MODS) LEGEND:
EPD - GROUND FAULT CIRCUIT INTERRUPTER (30mA)
GFCI - GROUND FAULT CIRCUIT INTERRUPTER (5mA)
LOD - LOCK-ON DEVICE
LFD - LOCK-OFF DEVICE

NOTES:
10kAIC

REV	ISSUED FOR	DATE	BY

PROJECT ENGINEER: J. PETERY
DESIGNED BY: E. FRANCOIS
DRAWN BY: M. BROCATO
CHECKED BY: E. FRANCOIS
IF THIS BAR DOES NOT MEASURE 1" THEN DRAWING IS NOT TO FULL SCALE 0 1/2" 1"

PERMIT SET
DO NOT USE FOR CONSTRUCTION

COMMONWEALTH OF VIRGINIA
EVERSLEY A. FRANCOIS
Lic. No. 57149
PROFESSIONAL ENGINEER
04-21-2020

Hazen
HAZEN AND SAWYER
1555 ROSENEATH ROAD
RICHMOND, VIRGINIA 23230

FREDERICK-WINCHESTER SERVICE AUTHORITY
WINCHESTER, VIRGINIA

OPEQUON WATER RECLAMATION FACILITY
FOG FACILITY UPGRADES

ELECTRICAL
PANELS AND SCHEDULES

DATE: APRIL 2020
HAZEN NO.: 31439-003
CONTRACT NO.: 202008
DRAWING NUMBER: E6

File: O:\31439-R\C31439-003\ENGINEERING\DRAWINGS\ELECTRICAL\E6 PANELS AND SCHEDULES Saved by DWHITTAKER Save date: 4/8/2020 2:46 PM
PLOT DATE: 4/20/2020 11:20 AM BY: JLUZON

CODED NOTES:

1. USE EXISTING 225A SPARE BREAKER TO POWER PP-FOG2.
2. PROVIDE NEW 20A SPARE BREAKER.

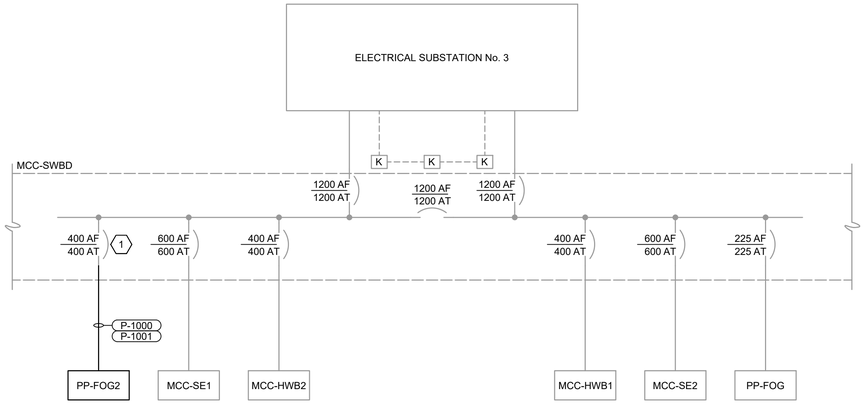

MCC-SWBD MODIFIED

PARTIAL SINGLE LINE DIAGRAM

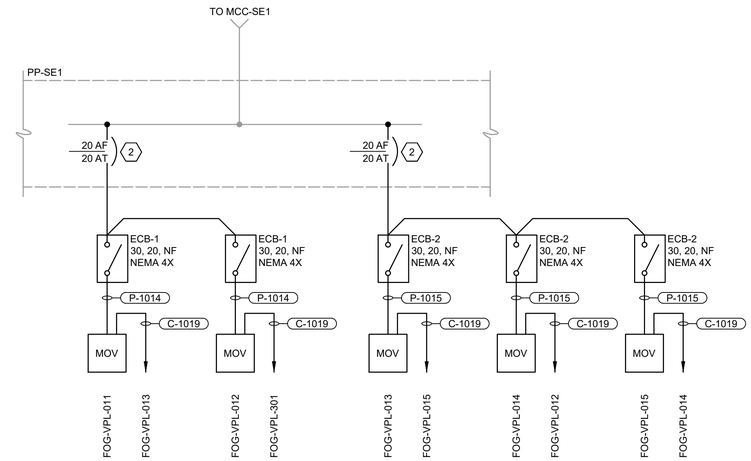

PP-SE1 MODIFIED

PARTIAL SINGLE LINE DIAGRAM

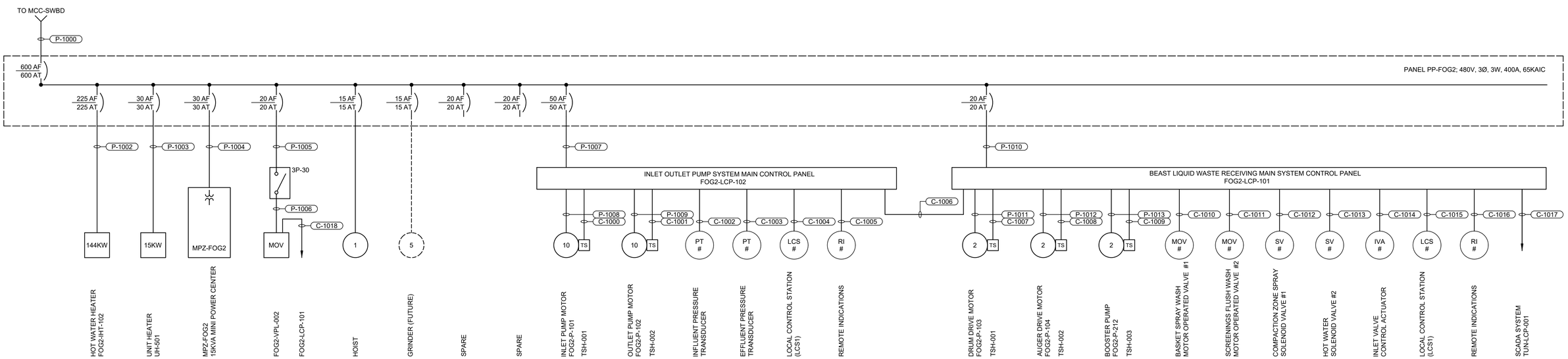

POWER PANEL PP-FOG2

SINGLE LINE DIAGRAM

REV	ISSUED FOR	DATE	BY

PROJECT ENGINEER:	J. PETERY
DESIGNED BY:	E. FRANCOIS
DRAWN BY:	M. BROCATO
CHECKED BY:	E. FRANCOIS
IF THIS BAR DOES NOT MEASURE 1" THEN DRAWING IS NOT TO FULL SCALE	0 1/2" 1"

PERMIT SET
DO NOT USE FOR CONSTRUCTION

COMMONWEALTH OF VIRGINIA
EVERSLEY A. FRANCOIS
Lic. No. 57149
04-21-2020
PROFESSIONAL ENGINEER

Hazen

HAZEN AND SAWYER
1555 ROSENEATH ROAD
RICHMOND, VIRGINIA 23230

FREDERICK-WINCHESTER SERVICE AUTHORITY
WINCHESTER, VIRGINIA

OPEQUON WATER RECLAMATION FACILITY
FOG FACILITY UPGRADES

ELECTRICAL
ONE-LINE DIAGRAMS AND CONDUIT RISERS

DATE:	APRIL 2020
HAZEN NO.:	31439-003
CONTRACT NO.:	202008
DRAWING NUMBER:	E7

File: O:\31439-R\C31439-003\ENGINEERING\DRAWINGS\ELECTRICAL\E7 ONE-LINE DIAGRAMS AND CONDUIT RISERS Saved by DWHITTAKER Save date: 4/13/2020 11:40 AM
PLOT DATE: 4/20/2020 11:21 AM BY: JLUZON

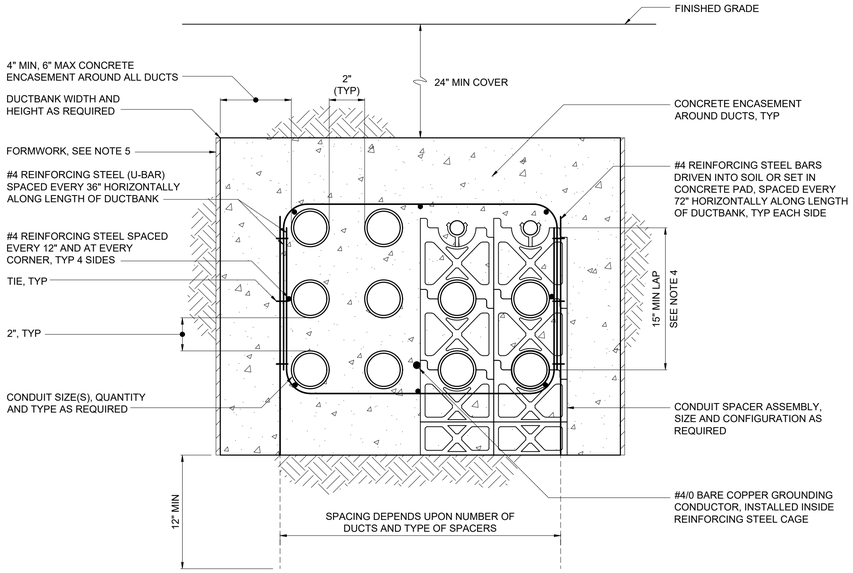

NOTES:

1. CONCRETE SHALL BE FURNISHED AND INSTALLED IN ACCORDANCE WITH SPECIFICATION SECTION 03 30 00.
2. REINFORCING STEEL AND TIES SHALL BE FURNISHED AND INSTALLED IN ACCORDANCE WITH SPECIFICATION SECTION 03 21 00. OVERLAP FOR REINFORCING STEEL SPLICES ALONG THE DUCTBANK LENGTH SHALL BE 15", MINIMUM.
3. CONDUIT SPACERS ARE REQUIRED IN ACCORDANCE WITH SPECIFICATION SECTION 33 71 19. HORIZONTAL SPACING OF CONDUIT SPACER ASSEMBLIES ALONG LENGTH OF DUCTBANK SHALL BE AS SHOWN IN THE TABLE.
4. FOR DUCTBANKS LESS THAN 15" IN HEIGHT, THE LAP SHALL BE THE HEIGHT OF THE DUCTBANK.
5. IN POOR SOIL CONDITIONS, DUCTBANKS SHALL BE FORMED WITH FORMING MATERIALS TO MAINTAIN 4" MINIMUM ENCASEMENT. WHERE SOIL CONDITIONS PERMIT AND THE EXCAVATION IS MAINTAINED FOR A 4" MINIMUM TO 10" MAXIMUM ENCASEMENT, THE FORMWORK CAN BE OMITTED.

MAX SPACING BETWEEN CONDUIT SPACER ASSEMBLIES

CONDUIT SIZE	SPACING
1"	3 FT
1 1/4-2"	5 FT
2 1/2-3"	6 FT
3 1/2-5"	7 FT
6"	8 FT

TYPICAL DUCTBANK SECTION

E-33-0101

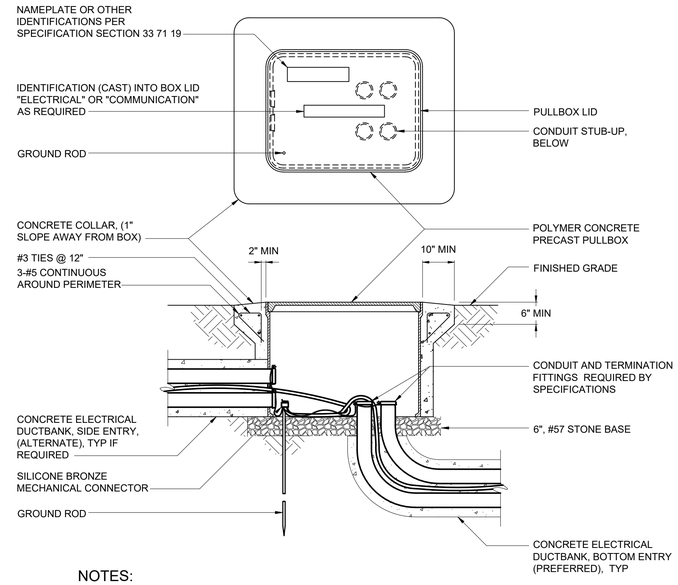

NOTES:

1. FOR SIDE ENTRY, CONDUIT DUCTBANK SHALL ENTER PULLBOX AT LOWEST POINT.
2. GROUND CONDUCTORS WITHIN DUCTBANK SHALL BE BOLTED TOGETHER AND TO GROUND ROD.
3. CONDUIT BONDING BUSHINGS (IF REQUIRED) SHALL BE BONDED TO GROUND ROD.
4. FOR SIDE ENTRY, CONDUIT SHALL ENTER IN INDIVIDUAL CIRCULAR HOLES APPROPRIATELY SIZED FOR THE CONDUIT. LARGE SINGLE RECTANGULAR OPENINGS FOR MULTIPLE CONDUITS ARE NOT ACCEPTABLE
5. DUCTBANK REINFORCING REBAR SHALL PENETRATE THE SIDEWALLS OF THE BOX NO LONGER THAN 1".

POLYMER CONCRETE ELECTRICAL HANDHOLE

E-33-0103

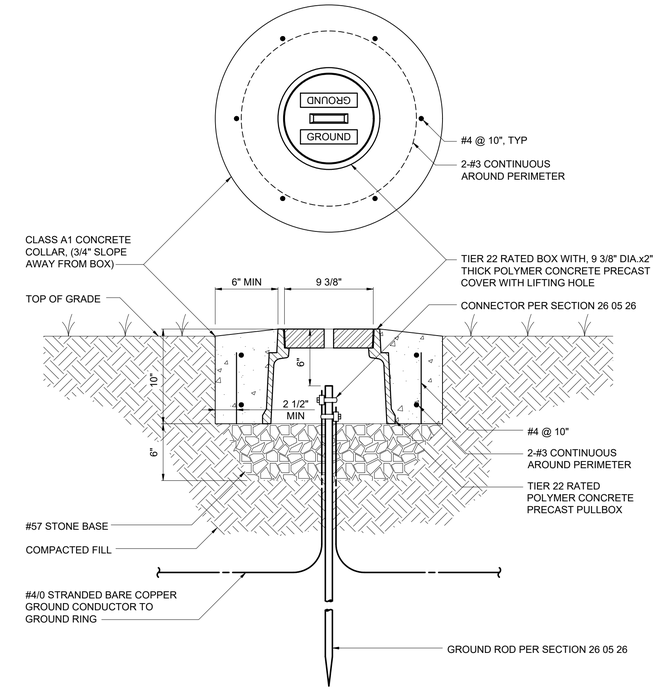

NOTES:

1. PRECAST PULLBOX AND COVER SHALL BE OLDCASTLE PART NUMBER 09101187, OR APPROVED EQUAL.

GROUND ROD TEST WELL

E-26-0501

REV	ISSUED FOR	DATE	BY

PROJECT ENGINEER: J. PETERY
DESIGNED BY: E. FRANCOIS
DRAWN BY: M. BROCATO
CHECKED BY: E. FRANCOIS
IF THIS BAR DOES NOT MEASURE 1" THEN DRAWING IS NOT TO FULL SCALE 0 1/2" 1"

PERMIT SET
DO NOT USE FOR CONSTRUCTION

COMMONWEALTH OF VIRGINIA
EVERSLEY A. FRANCOIS
Lic. No. 67149
04-21-2020
PROFESSIONAL ENGINEER

Hazen
HAZEN AND SAWYER
1555 ROSENEATH ROAD
RICHMOND, VIRGINIA 23230

FREDERICK-WINCHESTER SERVICE AUTHORITY
WINCHESTER, VIRGINIA

OPEQUON WATER RECLAMATION FACILITY
FOG FACILITY UPGRADES

ELECTRICAL
STANDARD DETAILS

DATE: APRIL 2020
HAZEN NO.: 31439-003
CONTRACT NO.: 202008
DRAWING NUMBER: E8

File: O:\31439-RIC\31439-003\ENGINEERING\DRAWINGS\ELECTRICAL\E8 DETAILS Saved by DWHITTAKER Save date: 4/6/2020 3:39 PM
PLOT DATE: 4/20/2020 11:22 AM BY: JLUZON